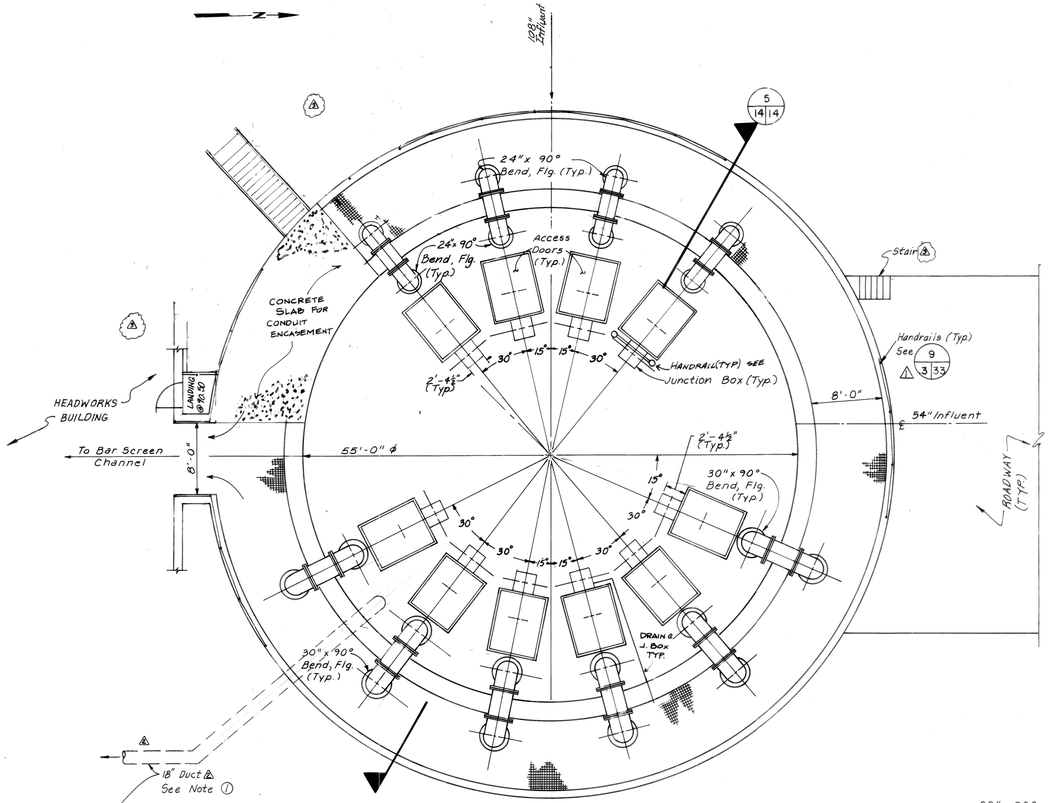

1 / 5 14 LIFT STATION PLAN - ELEV. 90.50
SCALE: 1/8" = 1'-0"

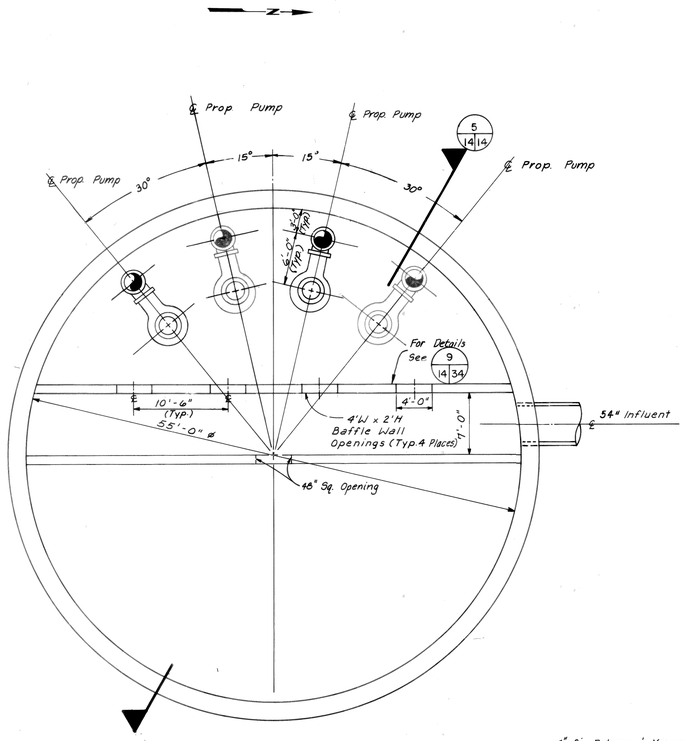

2 / 14 14 PLAN - ELEV. 46.50
SCALE: 1/8" = 1'-0"

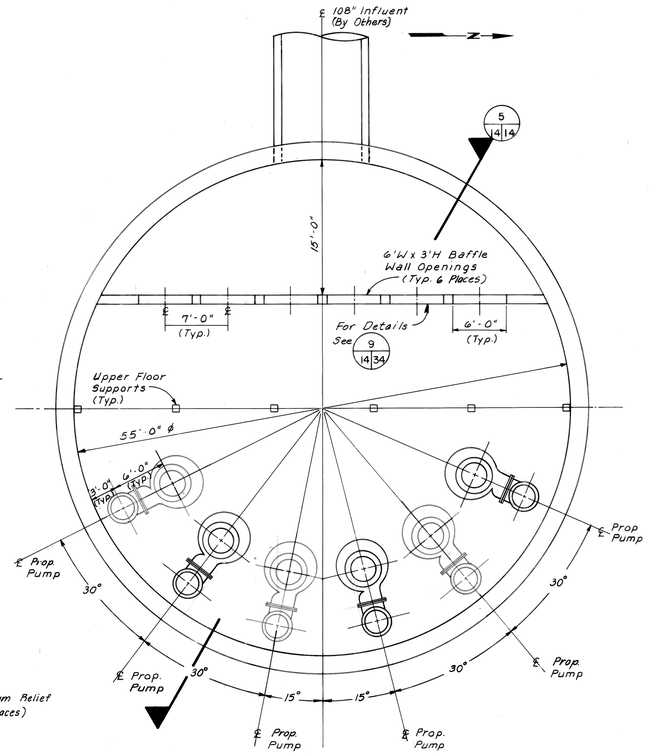

3 / 14 14 PLAN - ELEV 10.50
SCALE: 1/8" = 1'-0"

JOB NO. 4055-1

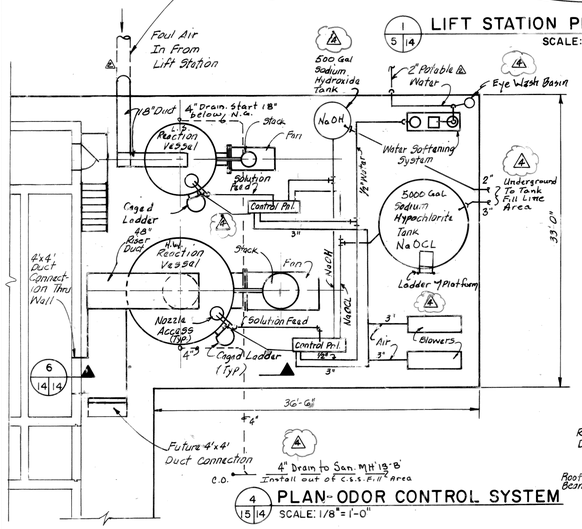

4 / 15 14 PLAN - ODOR CONTROL SYSTEM
SCALE: 1/8" = 1'-0"

Note: All Chemical lines at Odor Control Facility to be insulated for freeze protection. Heat strap 500 gal. NaOH tank and NaOH feed line to Control Panel.

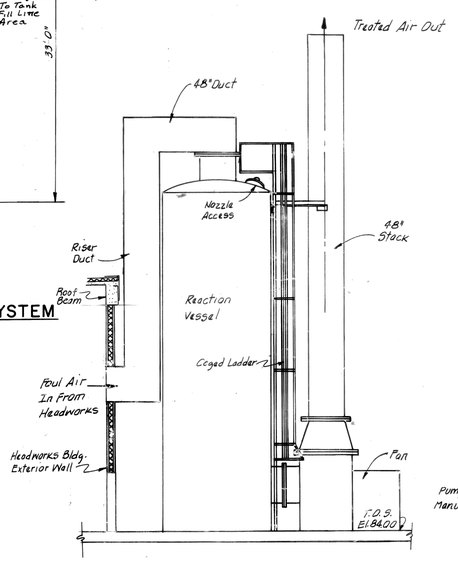

6 / 14 14 SECTION
SCALE: 1/8" = 1'-0"

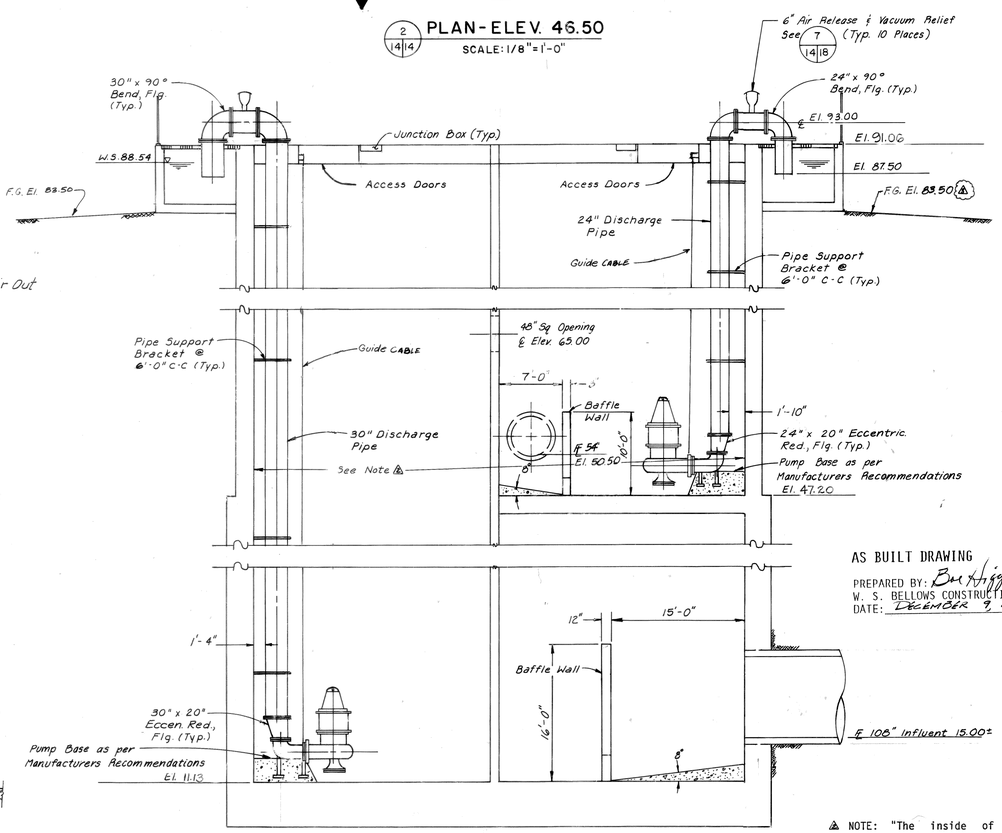

5 / 14 14 SECTION
SCALE: 1/8" = 1'-0"

AS BUILT DRAWING
PREPARED BY: Bill Higgins
W. S. BELLOWS CONSTRUCTION CORPORATION
DATE: DECEMBER 9, 1988

4 NOTE: "The inside of the lift station is to be coated with concrete waterproofing in accordance with Specification Section 09900."

4 NOTE 1 The 18" foul air line to the lift station should be located under the lift station channel and pass through the wall of the lift station. The 18" line should be provided with a turned down 90° bend and terminated inside the lift station.

REV.	DATE	DESCRIPTION	BY
4	2/1/88	Odor Control Fac. Revisions RFP 4055-1-31	P.C.W.
4	10/14/87	Reloc. Stairs RFP 4055-1-16	P.C.W.
4	2/6/87	Revised per Addendums 1, 2, & 3	D.C.S.
4	11-25-86	Revised Handrail Reference	D.C.S.

CITY OF HOUSTON
DEPARTMENT OF PUBLIC WORKS

WATER DESIGN — 11/13/86
PAVING DEPT. — 11/12/86
WATER QUALITY
STORM SEWER — 11/12/86
ASSISTANT DIRECTOR - WATER DIV.
SANITARY SEWERS
CHIEF ENG. - SEWER DIV.

OTHER DEPT'S.
TRAFFIC & TRANSPORTATION DEPT.
CITY PLANNING DEPT.
ASST. DIRECTOR OF PUBLIC WORKS
DIRECTOR OF PUBLIC WORKS

JEP E. PATE, JR. 25924 REGISTERED PROFESSIONAL ENGINEER

PATE ENGINEERS, INC.
P.O. BOX 924024 HOUSTON, TX 77292-4024 PHONE 713-462-3178

CITY OF HOUSTON
UPPER BRAYS REGIONAL WASTEWATER TREATMENT PLANT
PHASE I EXPANSION

INFLUENT LIFT STATION PLANS & SECTION

DESIGNED: D.H., D.C.S.	SCALE: 1/8" = 1'-0"	Job No. 201-15
DRAWN: J.H.P.		
DATE: MARCH, 1986	CONTRACT: No. 1	Sheet 14 of 100

28609