REV. NO.	DATE	DESCRIPTION	DRAWN	CHECK'D

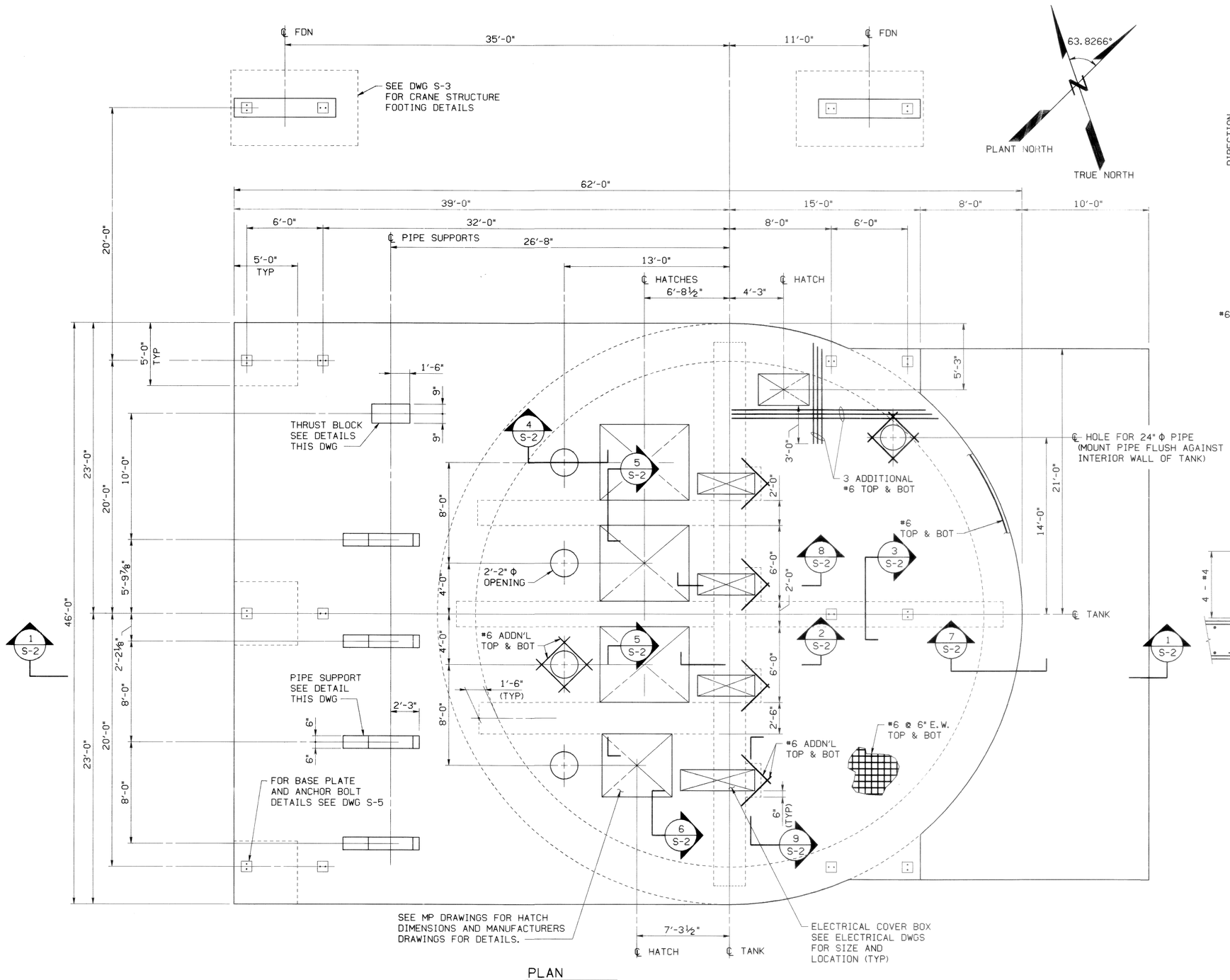

PLAN
SCALE: ¼" = 1'-0"

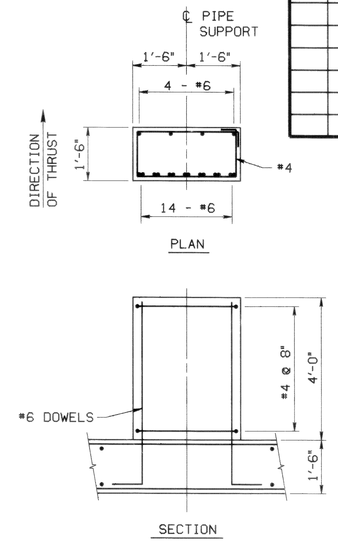

THRUST BLOCK DETAILS
SCALE: ½" = 1'-0"

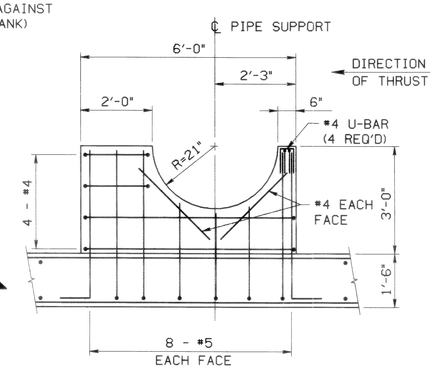

PIPE SUPPORT DETAIL
SCALE: ½" = 1'-0"

NOTES:
1. DESIGN LIVE LOAD ON ROOF SLAB = 300 PSF
2. REFER TO ELECTRIAL DRAWING FOR CONDUIT EMBEDDED IN CONCRETE SLAB
3. ALL CONCRETE FOR THIS STRUCTURE SHALL HAVE A MINIMUM 28 DAY CAPACITY OF f'c = 4000 PSI

WASTEWATER JOB NO. 4063-1

CITY OF HOUSTON
DEPARTMENT OF PUBLIC WORKS

APPROVALS

WATER DESIGN	PAVING DEPT.
WATER QUALITY	STORM SEWERS
ASSISTANT DIRECTOR-WATER DIV.	SANITARY SEWERS
	CHIEF ENG.-SEWER DIV.

OTHER DEPT'S.

TRAFFIC & TRANSPORTATION DEPT.	CITY PLANNING DEPT.
ASST. DIRECTOR OF PUBLIC WORKS	DIRECTOR OF PUBLIC WORKS

SUBMITTED:	DESIGNED BY:
SCALE:	DRAWN BY:
DATE:	SHEET NO. OF SHEETS
SURV. BY:	
F.B. NO.:	DWG. NO. 28801

STATE OF TEXAS
ROBERT A. MAXWELL
57506
REGISTERED PROFESSIONAL ENGINEER

JOHNSON
ENGINEERS ARCHITECTS PLANNERS

WCID 111 WASTEWATER TREATMENT PLANT

INFLUENT PUMP STATION
UPPER PLAN

BERNARD JOHNSON INCORPORATED
ENGINEERS · ARCHITECTS · PLANNERS
5050 WESTHEIMER
HOUSTON TEXAS 77056

Job No.: 87027		Dwg	S-1
Date: MAY 1987		Sheet	39
Dwn. By: JKB		Of	158
Chkd.By: RAM			

DEV:[GRP,USR]NNNNNNNNNN.EXT INT MM-DD-YY
ZF2:[150,60]LIFTS02 .DGN JKB 05-01-87