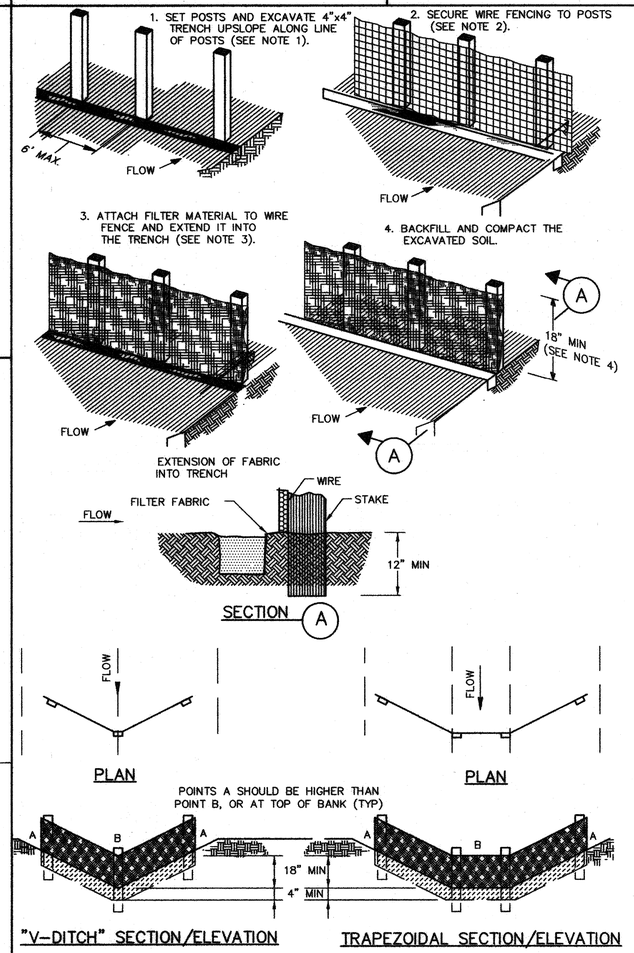

CONSTRUCTION NOTES:

1. SET 2 INCH BY 2 INCH WOODEN STAKES SPACED A MAX OF 6 FEET APART AND EMBEDDED A MIN OF 12 INCHES.
2. WOVEN WIRE FENCE TO BE FASTENED SECURELY TO FENCE POSTS WITH STAPLES.
3. FILTER CLOTH TO BE FASTENED SECURELY TO WOVEN WIRE FENCE, WITH TIES SPACED EVERY 24 INCHES AT TOP AND MIDSECTION.
4. MINIMUM HEIGHT OF FILTER SHOULD BE 18 INCHES AND A MAXIMUM OF 36 INCHES ABOVE NATURAL GROUND.
5. WHEN TWO SECTIONS OF FILTER CLOTH ADJOIN EACH OTHER THEY SHALL BE OVERLAPPED 6 INCHES AT THE POSTS, AND FOLDED.
6. SEE SPECIFICATION FOR FILTER FABRIC BARRIER.

×—(RFB)—× SYMBOL

REINFORCED FILTER FABRIC BARRIER

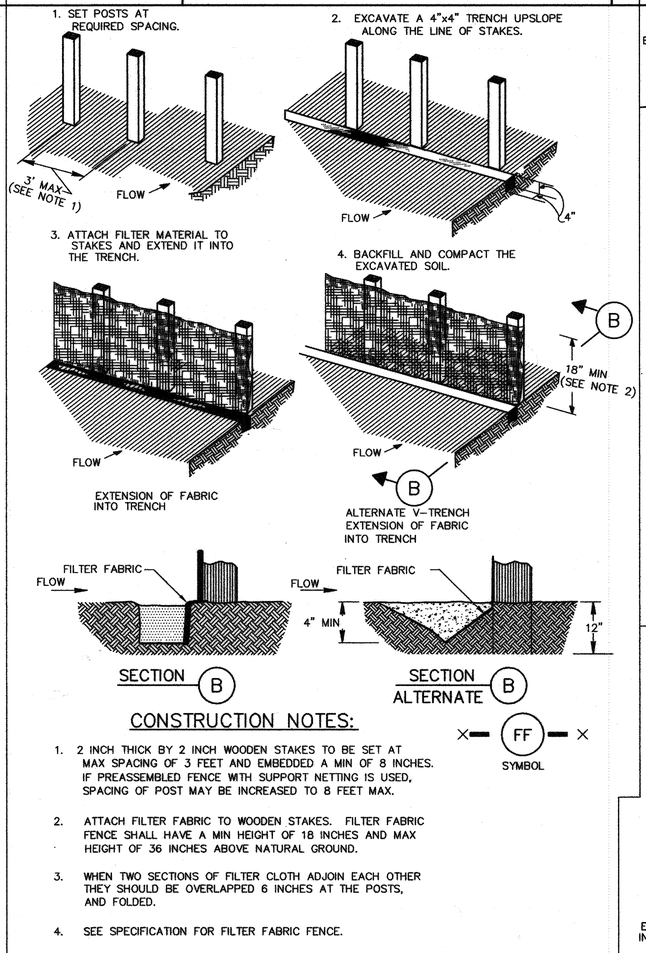

CONSTRUCTION NOTES:

1. 2 INCH THICK BY 2 INCH WOODEN STAKES TO BE SET AT MAX SPACING OF 3 FEET AND EMBEDDED A MIN OF 8 INCHES. IF PREASSEMBLED FENCE WITH SUPPORT NETTING IS USED, SPACING OF POST MAY BE INCREASED TO 8 FEET MAX.
2. ATTACH FILTER FABRIC TO WOODEN STAKES. FILTER FABRIC FENCE SHALL HAVE A MIN HEIGHT OF 18 INCHES AND MAX HEIGHT OF 36 INCHES ABOVE NATURAL GROUND.
3. WHEN TWO SECTIONS OF FILTER CLOTH ADJOIN EACH OTHER THEY SHOULD BE OVERLAPPED 6 INCHES AT THE POSTS, AND FOLDED.
4. SEE SPECIFICATION FOR FILTER FABRIC FENCE.

×—(FF)—× SYMBOL

FILTER FABRIC FENCE

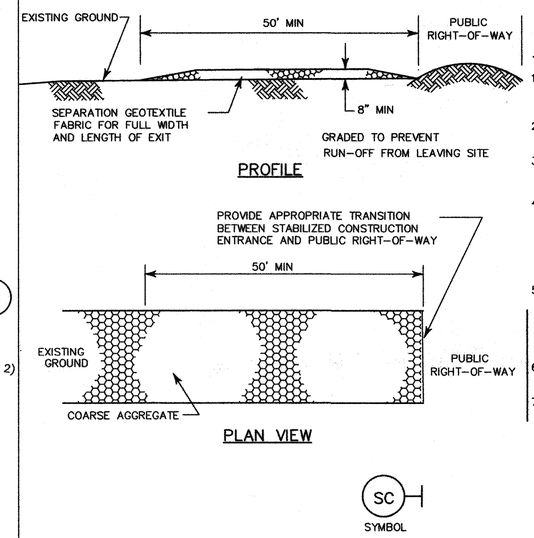

STABILIZED CONSTRUCTION EXIT

CONSTRUCTION NOTES:

1. LENGTH SHALL BE AS SHOWN ON THE CONSTRUCTION DRAWINGS, BUT NOT LESS THAN 50 FEET.
2. THICKNESS SHALL BE NOT LESS THAN 8 INCHES.
3. WIDTH SHALL BE NOT LESS THAN FULL WIDTH OF ALL POINTS OF INGRESS OR EGRESS.
4. STABILIZATION FOR OTHER AREAS SHALL HAVE THE SAME AGGREGATE THICKNESS AND WIDTH REQUIREMENTS AS THE STABILIZED CONSTRUCTION EXIT, UNLESS OTHERWISE SHOWN ON THE CONSTRUCTION DRAWINGS.
5. STABILIZED AREA MAY BE WIDENED OR LENGTHENED TO ACCOMMODATE A TRUCK WASHING AREA. AN OUTLET SEDIMENT TRAP MUST BE PROVIDED FOR THE TRUCK WASHING AREA.
6. SEE SPECIFICATION FOR STABILIZED CONSTRUCTION EXIT.
7. STABILIZED CONSTRUCTION EXIT SHALL BE MAINTAINED FREE OF SEDIMENT FOR THE DURATION OF THE PROJECT.

CONSTRUCTION NOTE:

1. MAX. POST SPACING SHALL BE 4 FEET. ADDITIONAL POSTS MAY BE ADDED. POSTS SHALL BE PLACED ON EACH CORNER, AS A MINIMUM, AS SHOWN.
2. PLACEMENT OF FILTER FABRIC BARRIER FROM INLET SHALL VARY ACCORDING TO SITE CONDITIONS. TYPICAL PLACEMENT SHALL BE 36" MINIMUM FROM INLET EDGE.

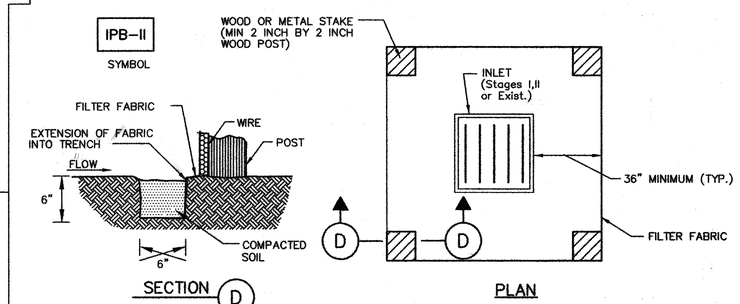

SILT FENCE INLET PROTECTION BARRIER

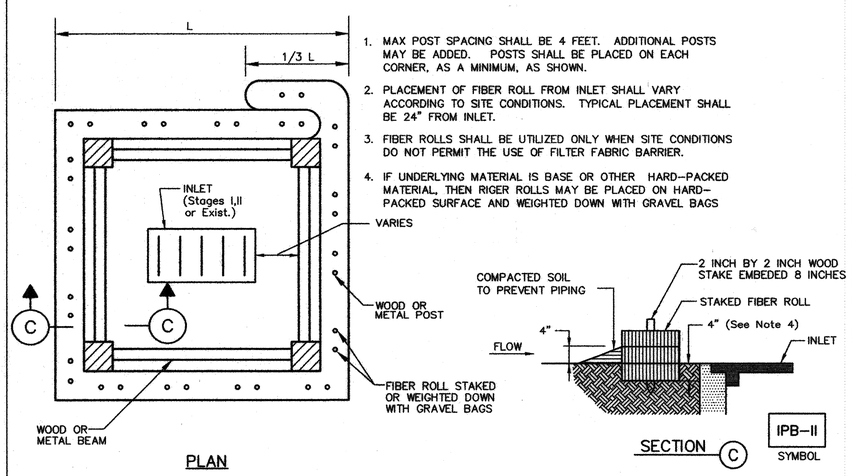

1. MAX POST SPACING SHALL BE 4 FEET. ADDITIONAL POSTS MAY BE ADDED. POSTS SHALL BE PLACED ON EACH CORNER, AS A MINIMUM, AS SHOWN.
2. PLACEMENT OF FIBER ROLL FROM INLET SHALL VARY ACCORDING TO SITE CONDITIONS. TYPICAL PLACEMENT SHALL BE 24" FROM INLET.
3. FIBER ROLLS SHALL BE UTILIZED ONLY WHEN SITE CONDITIONS DO NOT PERMIT THE USE OF FILTER FABRIC BARRIER.
4. IF UNDERLYING MATERIAL IS BASE OR OTHER HARD-PACKED MATERIAL, THEN RIGER ROLLS MAY BE PLACED ON HARD-PACKED SURFACE AND WEIGHTED DOWN WITH GRAVEL BAGS

FIBER ROLL INLET PROTECTION BARRIER

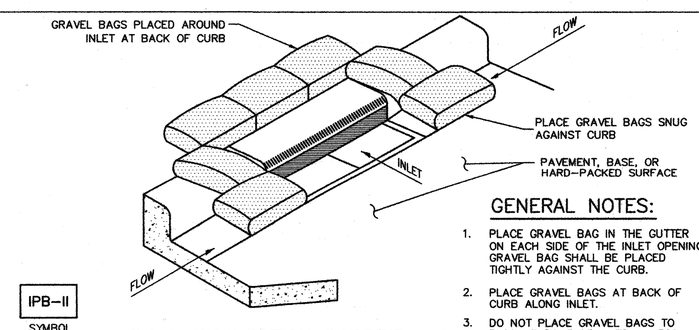

GENERAL NOTES:

1. PLACE GRAVEL BAG IN THE GUTTER ON EACH SIDE OF THE INLET OPENING. GRAVEL BAG SHALL BE PLACED TIGHTLY AGAINST THE CURB.
2. PLACE GRAVEL BAGS AT BACK OF CURB ALONG INLET.
3. DO NOT PLACE GRAVEL BAGS TO BLOCK THROAT OF INLET, UNLESS DIRECTED BY ENGINEER.

INLET PROTECTION BARRIER
(FOR EXISTING & PROPOSED STAGE II INLETS)

ISSUE LOG

NO.	DATE	DESCRIPTION

CONSULTANT(S):
CLAUNCH & MILLER, INC.
Engineering Consultants
4635 Southwest Freeway, Suite 1000 • Houston, Texas 77027
713-622-9264 • Fax: 713-622-9265 • www.clauncheiller.com

SEAL(S): STATE OF TEXAS — GUILLERMO I. SACCO — 98466 — LICENSED — PROFESSIONAL ENGINEER — 19 May 08

PROJECT NAME:
HOUSTON-PIERCE ELEVATED AND LOT "C" PARKING LOT IMPROVEMENTS

CITY OF HOUSTON
GENERAL SERVICES DEPARTMENT

REVIEWED:
PROGRAM MANAGER — SPONSORING DEPARTMENT
PROJECT MANAGER

TO ARRANGE FOR LINES TO BE TURNED OFF OR MOVED, CALL CENTERPOINT AT 713-207-7777.
PRIVATE UTILITY LINES SHOWN
AT LEAST 48 HOURS BEFORE EXCAVATING IN STREET R.O.W. OR EASEMENTS CALL THE LONE STAR NOTIFICATION 713-223-4567.

N/A Date:
CenterPoint Energy/Electric Facilities
(Approved only for crossing underground ductlines, unless otherwise noted.)
Valid at time of review only.

N/A Date:
SBC Approved for underground conduit facilities only.
Signature valid for one year.

N/A Date:
CenterPoint Energy/Gas Facilities
(Gas service lines are not shown)

SHEET TITLE:
Storm Water Pollution Prevention Details I

NOTE: CITY SIGNATURES VALID FOR ONE YEAR ONLY AFTER DATE OF SIGNATURES
CITY OF HOUSTON
DEPARTMENT OF PUBLIC WORKS AND ENGINEERING
WATER — TRAFFIC & TRANSPORTATION
WASTEWATER — STORM WATER QUALITY FACILITIES
STORM
STREET & BRIDGE

FILE NO:
FOR CITY OF HOUSTON USE ONLY
DRAWING SCALE
HORZ: NA
VERT: NA
SHEET No: 19 OF 29

CITY DWG. NO.:
REVISED JAN 2006