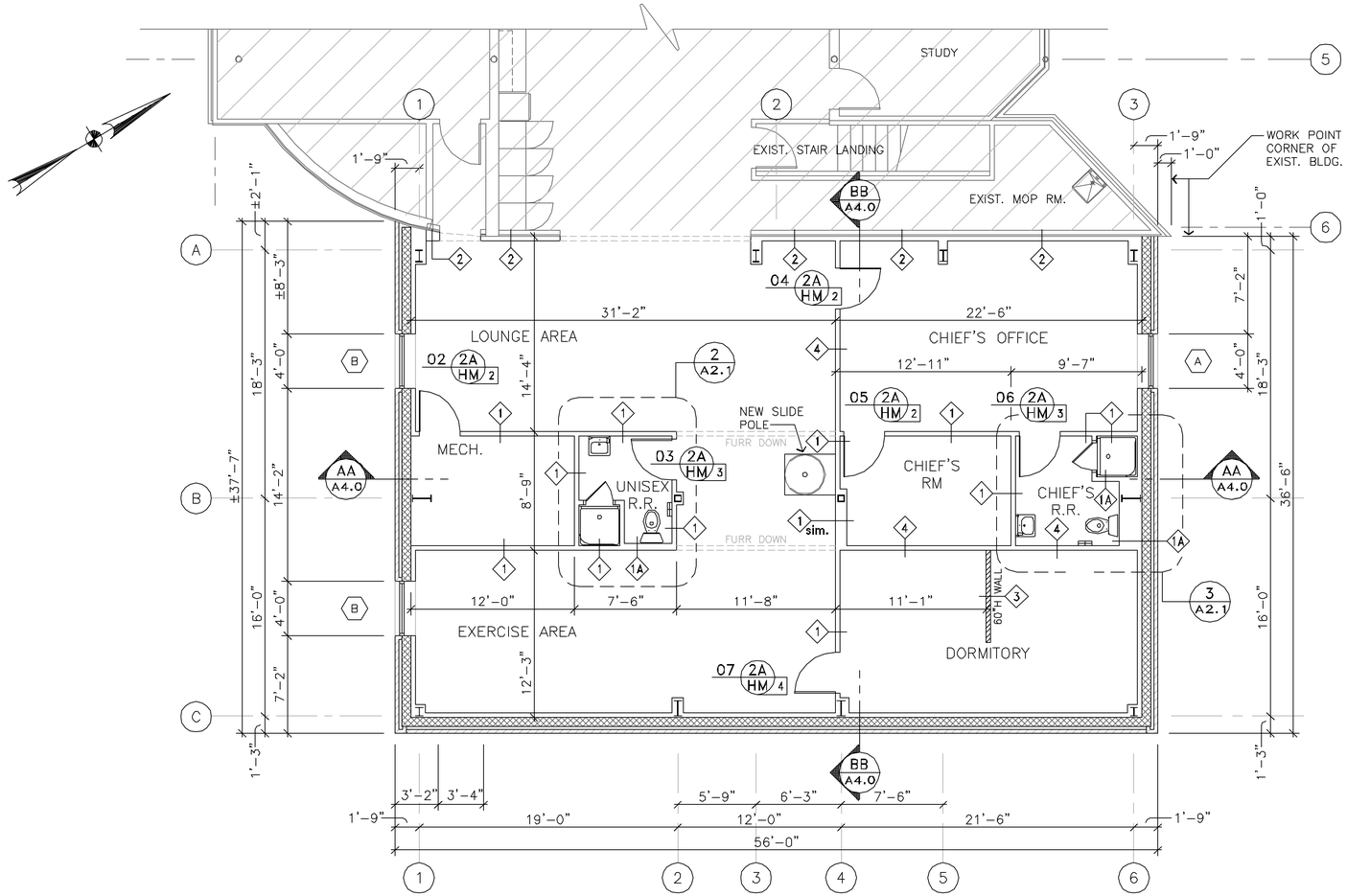


## 1 2nd LEVEL ARCHITECTURAL FLOOR PLAN

SCALE: 3/16" = 1'-0"

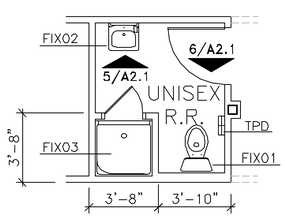


## 2 ENLARGED UNISEX R.R.

SCALE: 1/4" = 1'-0"

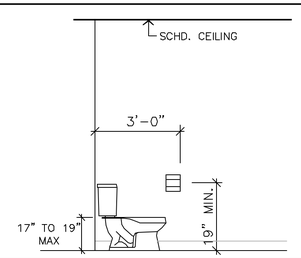


## 4 TYP. WATER CLOSET ELEV.

SCALE: N.T.S.

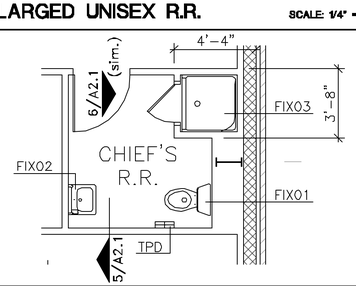


## 3 ENLARGED CHIEF'S R.R.

SCALE: 1/4" = 1'-0"

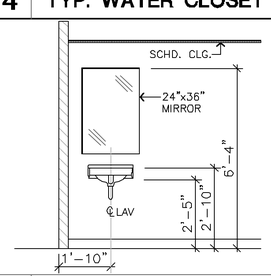


## 5 INT. ELEVATION @ UNISEX & CHIEF'S R.R.

SCALE: 3/8" = 1'-0"

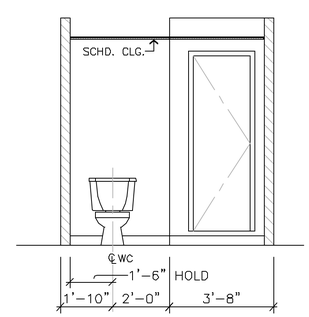


## 6 INT. ELEVATION @ UNISEX R.R.

SCALE: 3/8" = 1'-0"

| | |
|---|---|
| TPD | STAINLESS STEEL TOILET PAPER DISPENSER |
| FIX01 | WATER CLOSET. RE: PLB. SCHD. |
| FIX02 | WALL MOUNTED HAND SINK. RE: PLB. SCHD. |
| FIX03 | SHOWER. RE: PLB. SCHD. |

## 7 PLUMBING FIXTURE & ACCESSORY SCHED.

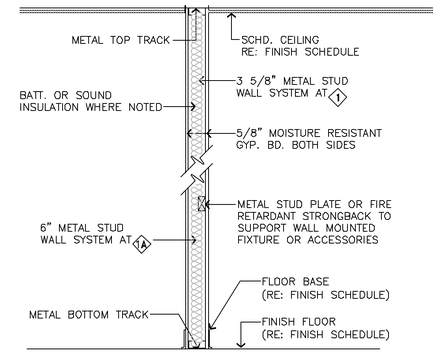


1 (3-5/8" STANDARD WALL UP TO TOP OF CEILING GRID) – WITH 3-5/8" METAL STUDS – 25GA. @ 16"O.C. WITH 1-LAYER OF 5/8" MOISTURE RESISTANT GYP. BD. EACH FACE WITH BATT. INSULATION

1A (6" PLUMBING CHASE UP TO TOP OF CEILING GRID) – WITH 6" METAL STUDS – 25GA. @ 16"O.C. WITH 1-LAYER OF 5/8" MOISTURE RESISTANT GYP. BD. EACH FACE WITH SOUND INSULATION

## WALL PARTITION TYPE 1 & 1A

SCALE: N.T.S.

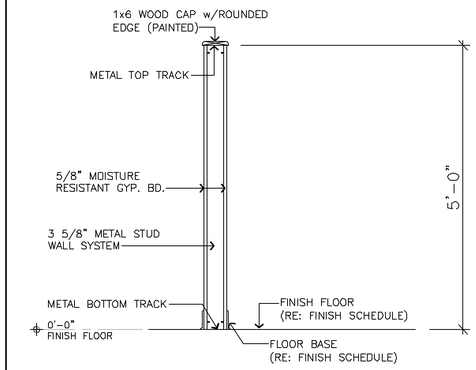


3 (3 5/8" LOW WALL) – WITH 3 5/8" METAL STUDS – 18GA. @16"O.C. WITH 1-LAYER OF 5/8" MOISTURE RESISTANT GYP. BD. EACH FACE

## WALL PARTITION TYPE 3

SCALE: N.T.S.

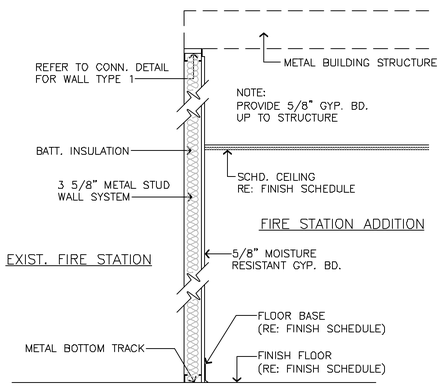


2 (3-5/8" STANDARD WALL UP TO TOP OF CEILING GRID) – WITH 3-5/8" METAL STUDS – 25GA. @ 16"O.C. WITH 1-LAYER OF 5/8" MOISTURE RESISTANT GYP. BD. ON EXPOSED SIDE UP TO CEILING WITH BATT. INSULATION

## WALL PARTITION TYPE 2

SCALE: N.T.S.

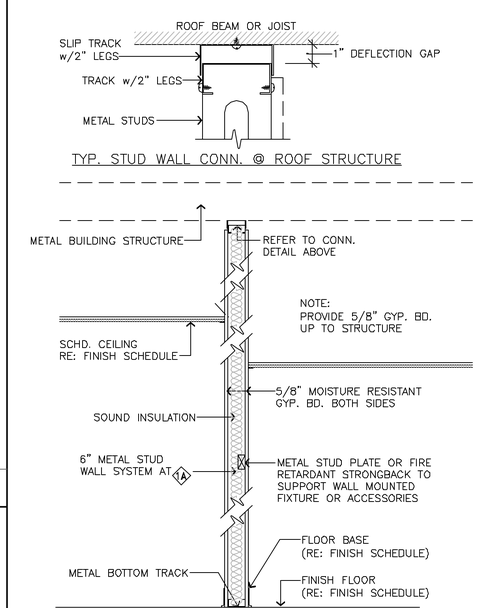


4 (3-5/8" STANDARD WALL UP TO UNDERSIDE OF STRUCTURE) – WITH 3-5/8" METAL STUDS – 25GA. @ 16"O.C. WITH 1-LAYER OF 5/8" MOISTURE RESISTANT GYP. BD. EACH FACE UP TO STRUCTURE WITH BATT. INSULATION

## WALL PARTITION TYPE 4

SCALE: N.T.S.

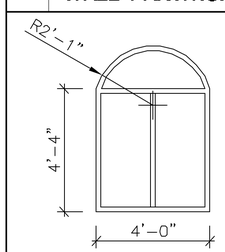


A 4'-0" x 4'-4" OPERABLE WINDOW w/ANODIZED ALUMINUM THERMAL BREAK FRAME w/LOW-E INSULATED GLASS (NEW WINDOWS SHALL MATCH 2nd LEVEL WINDOWS ON EXIST. BUILDING – FIELD VERIFY)

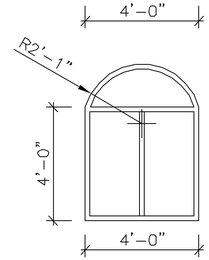


B 4'-0" x 4'-0" OPERABLE WINDOW w/ANODIZED ALUMINUM THERMAL BREAK FRAME w/LOW-E INSULATED GLASS (NEW WINDOWS SHALL MATCH 2nd LEVEL WINDOWS ON EXIST. BUILDING – FIELD VERIFY)

## 8 WINDOW SCHEDULE

SCALE: N.T.S.

Copyright © 2009 Lay-Su & Associates, Inc.
Reproduction of this drawing or information herein without written permission of Lay-Su & Associates, Inc., violates the copyright laws of the U.S. and will be subject to legal prosecution.

# CITY OF HOUSTON FIRE DEPARTMENT
## FIRE STATION #20 - ADDITION
6902 NAVIGATION BLVD., HOUSTON, TEXAS

SEAL: REGISTERED ARCHITECT R. LAY-SU 10323 STATE OF TEXAS 04/16/10

R. Lay-Su
Arch.# 10323

LAY-SU Architects & Engineers
HOUSTON, TEXAS 77031
TEXAS ENGINEERING FIRM #F-5215

WARNING 0 1 IF THIS BAR DOES NOT MEASURE 1" THEN DRAWING IS NOT TO SCALE

| REV. | DATE | REMARKS |
|---|---|---|
| – | 04/15/10 | Issued for Bids |

Issued for Bid Date: Lay-Su Project No.: 1095

DESIGNED BY: R.L.S.
DRAWN BY: ROY
SCALE: AS SHOWN
DATE: SEPTEMBER 2009

DRAWING NAME: 2nd LEVEL ARCH. FLOOR PLAN & DETAILS

SHEET: A2.1