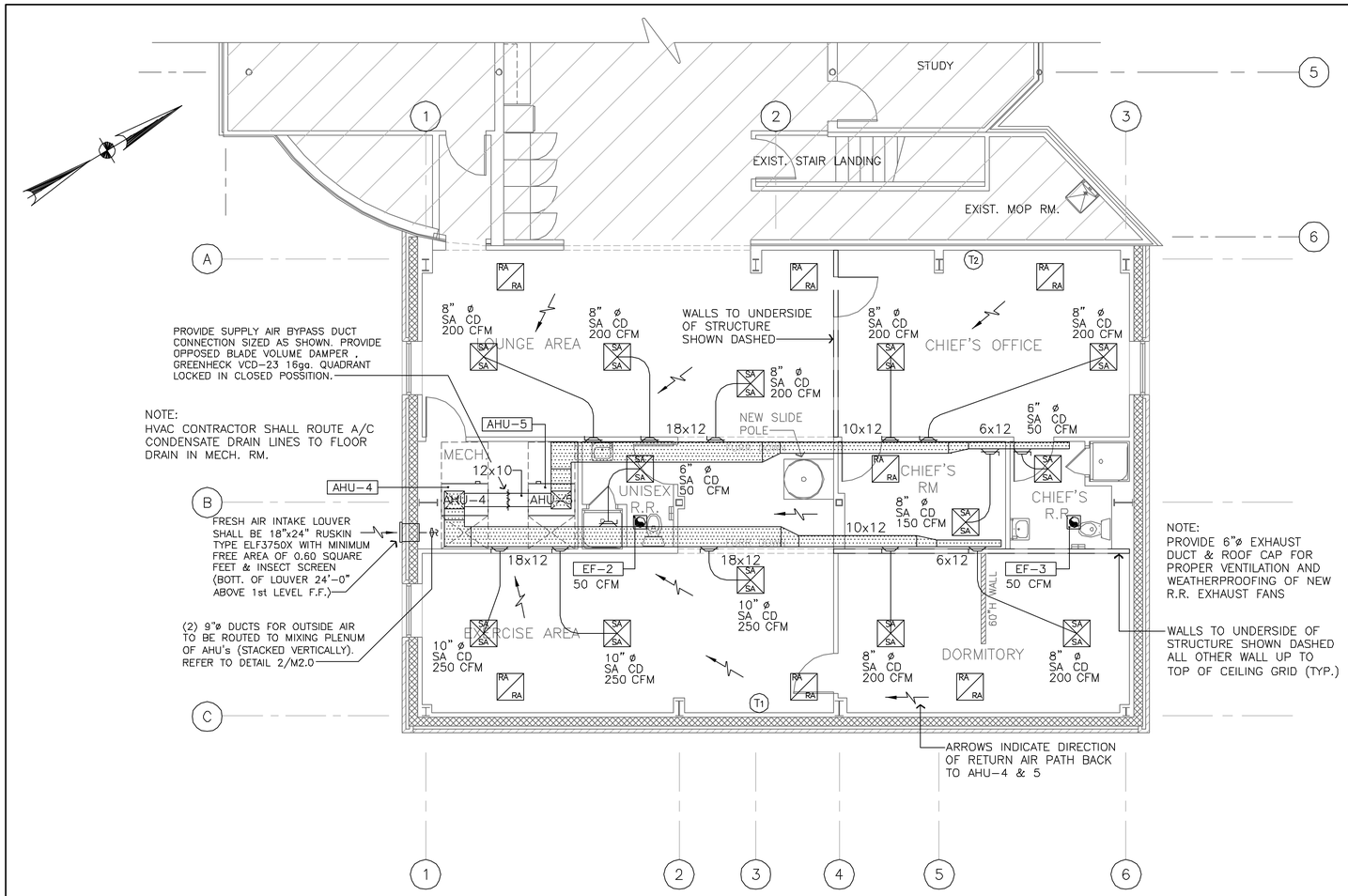

1 2nd LEVEL HVAC MECHANICAL PLAN

SCALE: 3/16" = 1'-0"

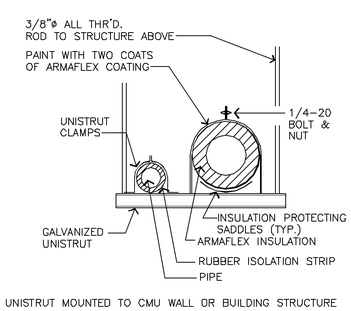

5 INDOOR REF. PIPING SUPPORT DET.

SCALE: N.T.S.

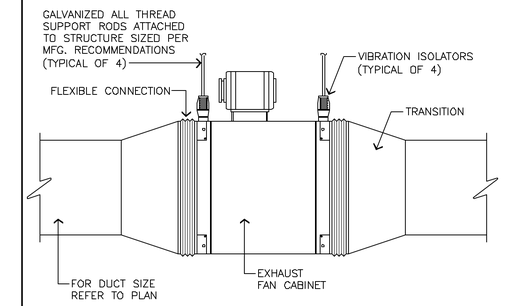

9 IN-LINE EXHAUST FAN DETAIL

SCALE: N.T.S.

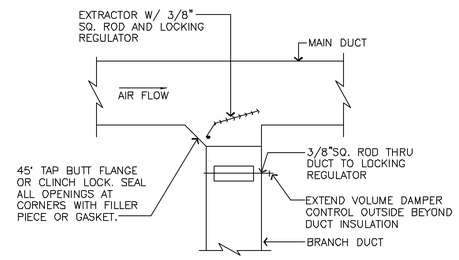

6 BRANCH DUCT TAKE-OFF

SCALE: N.T.S.

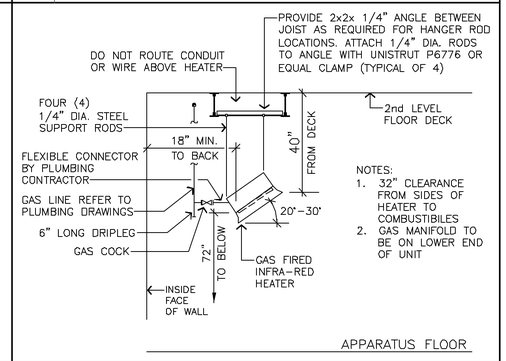

10 GAS INFRA-RED HEATER

SCALE: N.T.S.

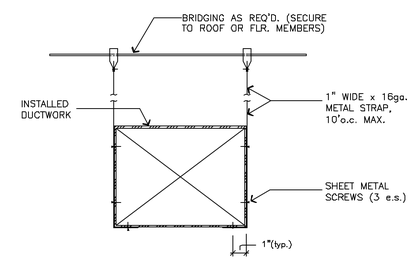

FOR DUCT LESS THAN 36" WIDE

7 SHEET METAL DUCTS SUPPORT DET.

SCALE: N.T.S.

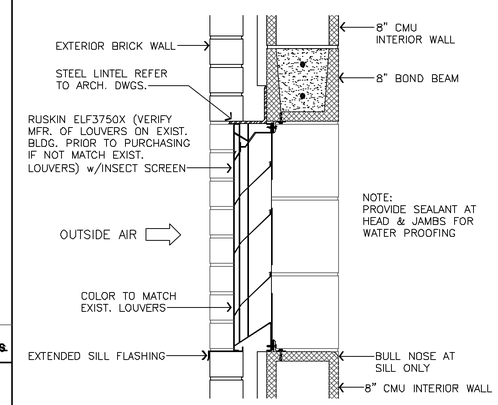

11 INTAKE LOUVER MOUNTING

SCALE: N.T.S.

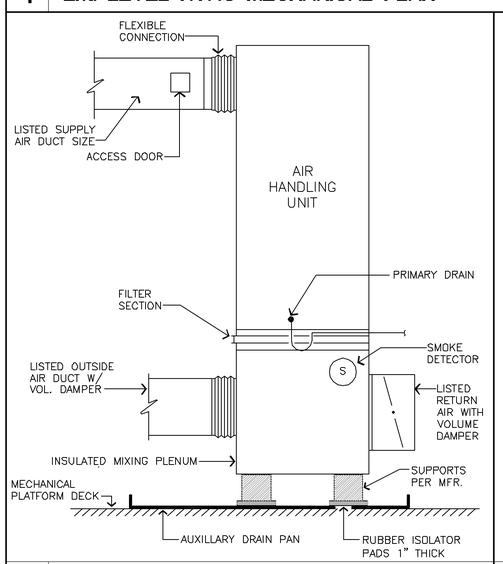

2 TYP. AHU-PLENUM RETURN DETAIL

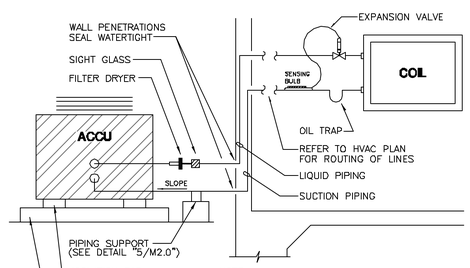

NOTE:
1. ALL PIPING SIZED AS PER EQUIP. MFR. RECOMMENDATION, FOR MAX. CAPACITY & OPTIMUM PERFORMANCE.
2. ALL REFRIGERANT PIPING SHALL BE REFRIGERATION GRADE ACR TYPE "L" COPPER.
3. JOINTS SHALL BE PROPERLY CLEANED AND JOINED USING SIL-FOS-5 OR EQUAL SOLDER.

3 REFRIGERANT PIPING DETAIL

SCALE: N.T.S.

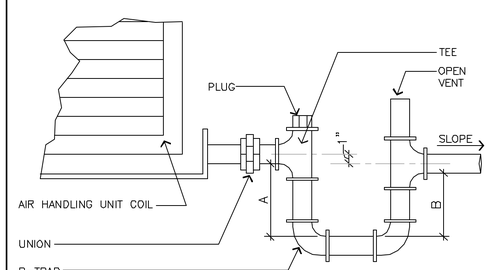

	"A"	"B"
DRAW THRU:	FAN TOTAL STATIC PRESSURE PLUS 1"	3"
BLOW THRU:	3"	FAN TOTAL STATIC PRESSURE PLUS 4"

4 AIR HANDLING UNIT CONDENSATE DRAIN

SCALE: N.T.S.

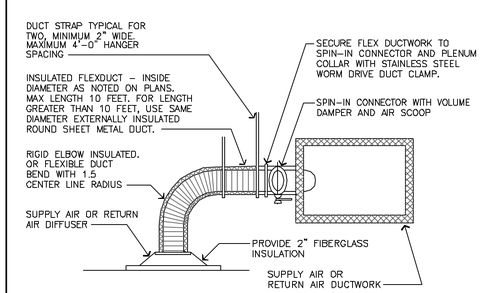

8 NON FIRE-RATED SUPPLY AIR DEVICE

SCALE: N.T.S.

Copyright © 2009 Lay-Su & Associates, Inc.
Reproduction of this drawing or information herein without written permission of Lay-Su & Associates, Inc., violates the copyright laws of the U.S. and will be subject to legal prosecution.

CITY OF HOUSTON FIRE DEPARTMENT
FIRE STATION #20 - ADDITION
6902 NAVIGATION BLVD., HOUSTON, TEXAS

SEAL: STATE OF TEXAS — R. LAY-SU — 46273 — REGISTERED PROFESSIONAL ENGINEER — 04/16/10
R. Lay-Su
P.E.# 46273

LAY-SU Architects & Engineers
Houston, Texas 77031
TEXAS ENGINEERING FIRM #F-5215

WARNING: 0 — 1 — IF THIS BAR DOES NOT MEASURE 1" THEN DRAWING IS NOT TO SCALE

REV.	DATE	REMARKS
–	04/15/10	Issued for Bids

Issued for Bid Date: | Lay-Su Project No.: 1095

DESIGNED BY: R.L.S.
DRAWN BY: ROY
SCALE: AS SHOWN
DATE: SEPTEMBER 2009

DRAWING NAME: 2nd LEVEL MECHANICAL PLAN & DETAILS

SHEET: M2.0

PRINT DATE: 04/16/10 DRAWING NAME: M2.0.dwg