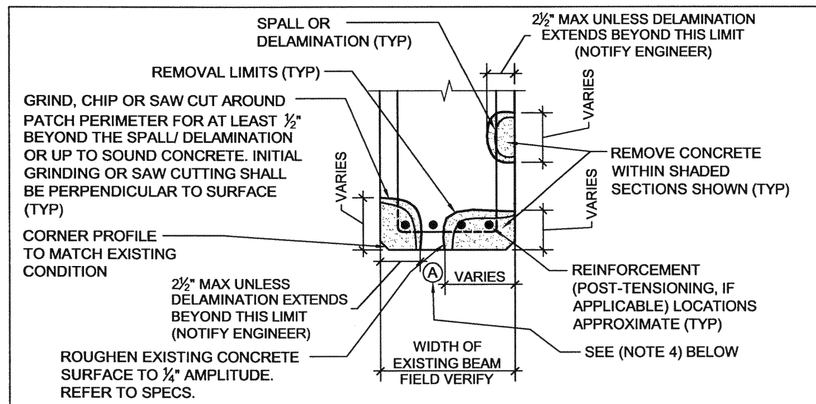

CAUTION:
USE NON-DESTRUCTIVE TECHNIQUES TO LOCATE REINFORCEMENT. DO NOT CUT REINFORCEMENT.

NOTES:
1. PROTECT EXISTING REINFORCEMENT FROM DAMAGE DURING CHIPPING, GRINDING OR SAW CUTTING FOR SPALL/DELAMINATION REPAIR.
2. REFER TO SECTION "SURFACE PREPARATION FOR PATCHING" FOR CLEANING AND COATING ALL EXPOSED REINFORCEMENT.
3. PROVIDE 3/4" CLEARANCE AROUND ALL EXPOSED REINFORCEMENT WHERE REQUIRED AS SPECIFIED IN SECTION "SURFACE PREPARATION FOR PATCHING."
4. WHERE DIMENSION "A" SHOWN IN DETAIL IS 4" OR LESS, THEN REPAIR ENTIRE WIDTH OF BEAM.
5. WHERE REINFORCEMENT THAT IS EXPOSED DURING SURFACE PREPARATION IS FOUND TO BE SEVERELY CORRODED OR HAS LOST 10% OR MORE OF ITS CROSS SECTIONAL AREA, SUPPLEMENTARY REINFORCEMENT MAY BE REQUIRED. REPORT TO ENGINEER FOR REVIEW AND DESIGN OF SUPPLEMENTARY REINFORCEMENT.
6. FOR BIDDING PURPOSES ASSUME UP TO 4" FOR DEPTH OF CONCRETE REMOVAL.

3.2 TYPICAL DETAIL - BEAM REPAIR
NTS

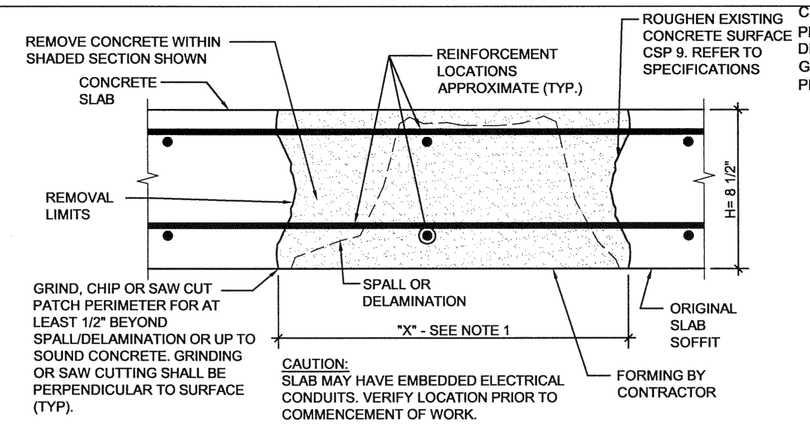

CAUTION:
SLAB MAY HAVE EMBEDDED ELECTRICAL CONDUITS. VERIFY LOCATION PRIOR TO COMMENCEMENT OF WORK.

NOTES:
1. CONSULT ENGINEER PRIOR TO STARTING WORK IF DIMENSION "X" IS GREATER THAN 1 FT.
2. PROTECT EXISTING PT TENDONS AND REINFORCEMENT FROM DAMAGE DURING CHIPPING, GRINDING OR SAW CUTTING FOR SPALL/DELAMINATION REPAIR.
3. REFER TO SECTION "SURFACE PREPARATION FOR PATCHING" SPECIFICATIONS FOR CLEANING AND COATING ALL EXPOSED REINFORCEMENT.
4. PROVIDE 3/4" CLEARANCE AROUND ALL EXPOSED REINFORCEMENT WHERE REQUIRED AS SPECIFIED IN SECTION "SURFACE PREPARATION FOR PATCHING."
5. WHERE REINFORCEMENT THAT IS EXPOSED DURING SURFACE PREPARATION IS FOUND TO BE SEVERELY CORRODED OR HAS LOST 10% OR MORE OF ITS CROSS SECTIONAL AREA, SUPPLEMENTARY REINFORCEMENT MAY BE REQUIRED. REPORT TO ENGINEER FOR REVIEW AND DESIGN OF SUPPLEMENTARY REINFORCEMENT.
6. PROVIDE SHORING AS SPECIFIED BY ENGINEER PRIOR TO COMMENCEMENT OF ANY CONCRETE REMOVAL WORK.
7. NEW PATCH SHALL MATCH EXISTING FINISH.

2.4 TYPICAL DETAIL - SLAB REPAIR OVERHEAD - FULL DEPTH
NTS

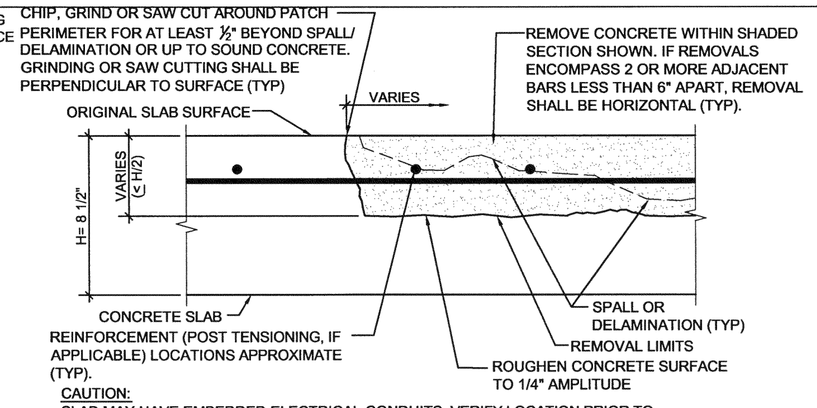

CAUTION:
SLAB MAY HAVE EMBEDDED ELECTRICAL CONDUITS. VERIFY LOCATION PRIOR TO COMMENCEMENT OF WORK. USE NON-DESTRUCTIVE TECHNIQUES TO VERIFY LOCATION OF POST-TENSIONING TENDONS. DO NOT CUT TENDONS.

NOTES:
1. PROTECT EXISTING REINFORCEMENT FROM DAMAGE DURING CHIPPING, GRINDING OR SAW CUTTING OR SPALL/DELAMINATION REPAIR.
2. REFER TO SECTION "SURFACE PREPARATION FOR PATCHING" FOR CLEANING AND COATING ALL EXPOSED REINFORCEMENT.
3. PROVIDE ¾" CLEARANCE AROUND ALL EXPOSED REINFORCEMENT WHERE REQUIRED AS SPECIFIED IN SECTION "SURFACE PREPARATION FOR PATCHING."
4. WHERE REINFORCEMENT THAT IS EXPOSED DURING SURFACE PREPARATION IS FOUND TO BE SEVERELY CORRODED OR HAS LOST 10% OR MORE OF ITS CROSS SECTIONAL AREA, SUPPLEMENTARY REINFORCEMENT MAY BE REQUIRED. REPORT TO ENGINEER FOR REVIEW AND DESIGN OF SUPPLEMENTARY REINFORCEMENT.
5. NEW PATCH SHALL MATCH EXISTING FINISH.

2.3 CONCRETE FLOOR REPAIR - PARTIAL DEPTH
NTS

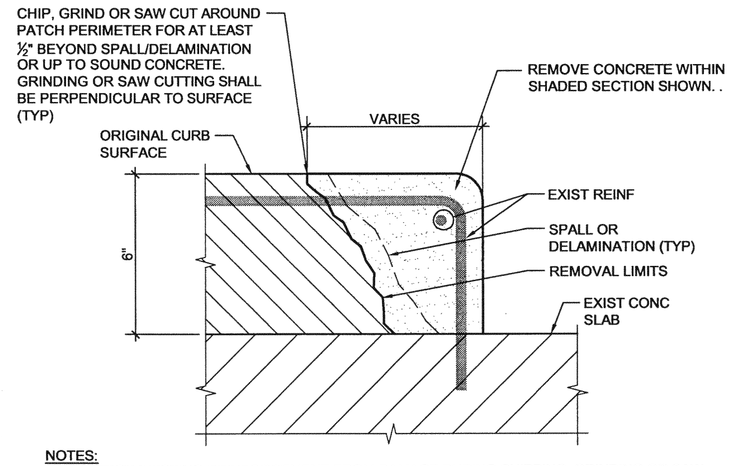

NOTES:
1. PROTECT EXISTING REINFORCEMENT FROM DAMAGE DURING CHIPPING, GRINDING OR SAW CUTTING OR SPALL/DELAMINATION REPAIR.
2. REFER TO SECTION "SURFACE PREPARATION FOR PATCHING" FOR CLEANING AND COATING ALL EXPOSED REINFORCEMENT.
3. PROVIDE ¾" CLEARANCE AROUND ALL EXPOSED REINFORCEMENT WHERE REQUIRED AS SPECIFIED IN SECTION "SURFACE PREPARATION FOR PATCHING."
4. WHERE REINFORCEMENT THAT IS EXPOSED DURING SURFACE PREPARATION IS FOUND TO BE SEVERELY CORRODED OR HAS LOST 10% OR MORE OF ITS CROSS SECTIONAL AREA, SUPPLEMENTARY REINFORCEMENT MAY BE REQUIRED. REPORT TO ENGINEER FOR REVIEW AND DESIGN OF SUPPLEMENTARY REINFORCEMENT.
5. NEW PATCH SHALL MATCH EXISTING FINISH. PAINT PATCH TO MATCH EXISTING COLOR.

2.1 TYPICAL DETAIL - CONCRETE CURB REPAIR
NTS

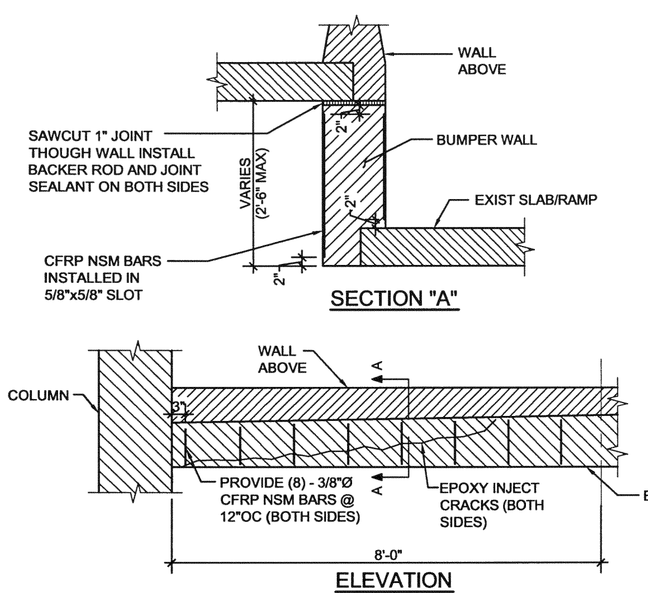

NOTES:
1. EPOXY INJECT CRACKS PRIOR TO CFRP INSTALLATION.
2. USE NON-DESTRUCTIVE TESTING TO LOCATE BEAM REINFORCEMENT PRIOR TO CUTTING SLOTS. DO NOT DAMAGE EXISTING REINFORCEMENT DURING SLOT INSTALLATION.

4.2 CONCRETE BUMPER WALL REPAIR
NTS

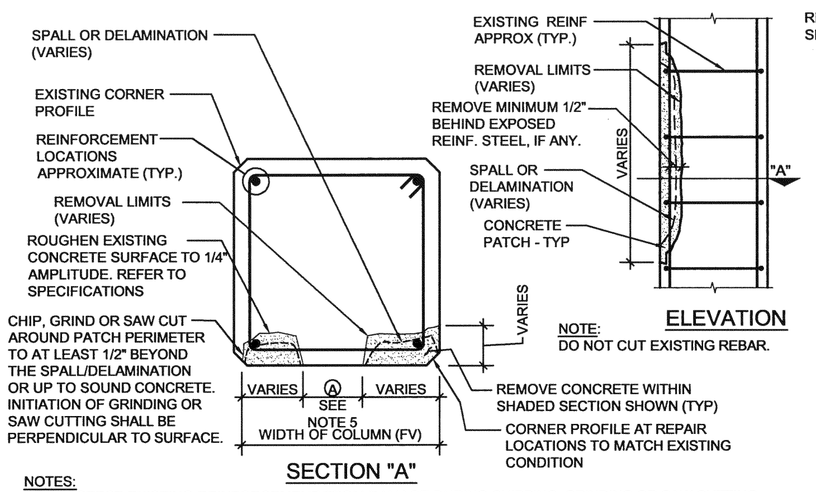

NOTES:
1. PROTECT EXISTING REINFORCEMENT FROM DAMAGE DURING CHIPPING, GRINDING OR SAW CUTTING FOR SPALL/DELAMINATION REPAIR.
2. REFER TO SECTION "SURFACE PREPARATION FOR PATCHING" SPECIFICATIONS FOR CLEANING AND COATING ALL EXPOSED REINFORCEMENT.
3. PROVIDE 3/4" CLEARANCE AROUND ALL EXPOSED REINFORCEMENT.
4. WHERE REINFORCEMENT THAT IS EXPOSED DURING SURFACE PREPARATION IS FOUND TO BE SEVERELY CORRODED OR HAS LOST 10% OR MORE OF ITS CROSS SECTIONAL AREA, SUPPLEMENTARY REINFORCEMENT MAY BE REQUIRED. REPORT TO ENGINEER FOR REVIEW AND DESIGN OF SUPPLEMENTARY REINFORCEMENT.
5. WHERE DIMENSION "A" SHOWN IN DETAIL IS 4" OR LESS, THEN REPAIR ENTIRE WIDTH OF COLUMN.
6. NEW PATCH SHALL MATCH EXISTING FINISH. PAINT TO MATCH EXISTING.

4.1 TYPICAL DETAIL - COLUMN REPAIR
NTS

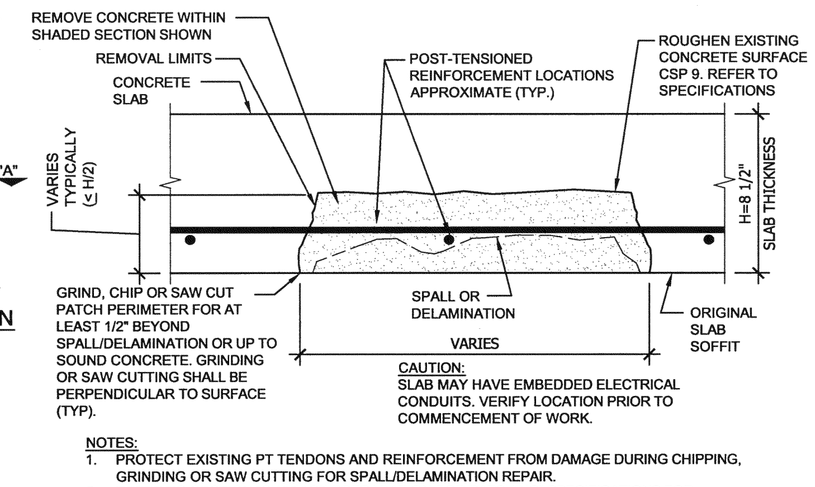

CAUTION:
SLAB MAY HAVE EMBEDDED ELECTRICAL CONDUITS. VERIFY LOCATION PRIOR TO COMMENCEMENT OF WORK.

NOTES:
1. PROTECT EXISTING PT TENDONS AND REINFORCEMENT FROM DAMAGE DURING CHIPPING, GRINDING OR SAW CUTTING FOR SPALL/DELAMINATION REPAIR.
2. REFER TO SECTION "SURFACE PREPARATION FOR PATCHING" SPECIFICATIONS FOR CLEANING AND COATING ALL EXPOSED REINFORCEMENT.
3. PROVIDE 3/4" CLEARANCE AROUND ALL EXPOSED REINFORCEMENT WHERE REQUIRED AS SPECIFIED IN SECTION "SURFACE PREPARATION FOR PATCHING."
4. WHERE REINFORCEMENT THAT IS EXPOSED DURING SURFACE PREPARATION IS FOUND TO BE SEVERELY CORRODED OR HAS LOST 10% OR MORE OF ITS CROSS SECTIONAL AREA, SUPPLEMENTARY REINFORCEMENT MAY BE REQUIRED. REPORT TO ENGINEER FOR REVIEW AND DESIGN OF SUPPLEMENTARY REINFORCEMENT.
5. NEW PATCH SHALL MATCH EXISTING FINISH.

3.7 TYPICAL DETAIL - SLAB REPAIR OVERHEAD - PARTIAL DEPTH POST-TENSIONED SLABS
NTS

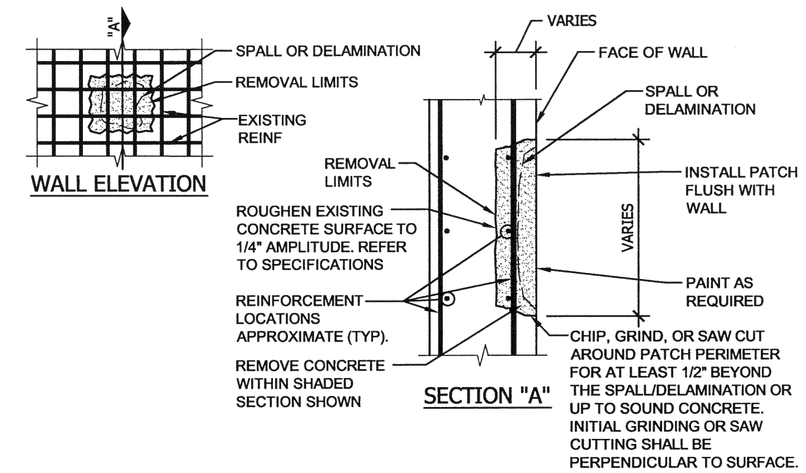

NOTES:
1. PROTECT EXISTING REINFORCEMENT FROM DAMAGE DURING CHIPPING, GRINDING OR SAW CUTTING FOR SPALL/DELAMINATION REPAIR.
2. REFER TO SECTION "SURFACE PREPARATION FOR PATCHING" FOR CLEANING AND COATING ALL EXPOSED REINFORCEMENT.
3. PROVIDE 3/4" CLEARANCE AROUND ALL EXPOSED REINFORCEMENT WHERE REQUIRED AS SPECIFIED IN SECTION "SURFACE PREPARATION FOR PATCHING."
4. WHERE REINFORCEMENT THAT IS EXPOSED DURING SURFACE PREPARATION IS FOUND TO BE SEVERELY CORRODED OR HAS LOST 10% OR MORE OF ITS CROSS SECTIONAL AREA, SUPPLEMENTARY REINFORCEMENT MAY BE REQUIRED. REPORT TO ENGINEER FOR REVIEW AND DESIGN OF SUPPLEMENTARY REINFORCEMENT.
5. NEW PATCH SHALL MATCH EXISTING FINISH. PAINT TO MATCH EXISTING.
6. FOR BIDDING PURPOSES ASSUME UP TO 4" FOR DEPTH OF CONCRETE REMOVAL.

3.6 TYPICAL DETAIL - CONCRETE WALL REPAIR
NTS

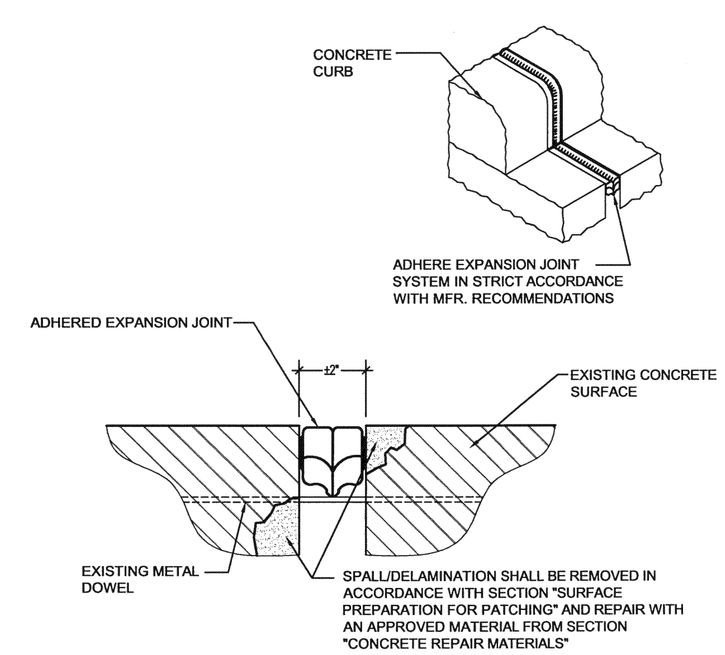

6.6 TYPICAL DETAIL - EXPANSION JOINT REPLACEMENT - ADHERED EXTRUDED RUBBER
NTS

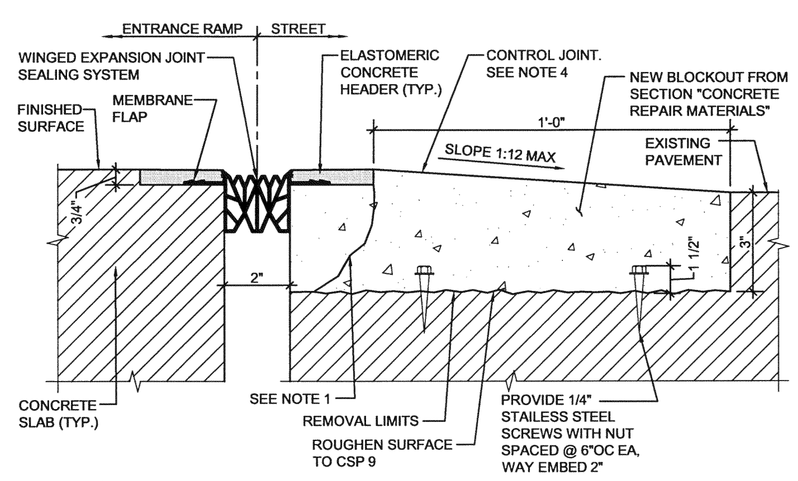

NOTES:
1. SPALL/DELAMINATION/VOID/CHIPS SHALL BE REMOVED IN ACCORDANCE WITH SECTION "SURFACE PREPARATION FOR PATCHING" AND REPAIR WITH AN APPROVED MATERIAL FROM SECTION "CONCRETE REPAIR MATERIALS". REMOVE EXISTING BRICK, MORTAR, AND LOOSE CONCRETE WHERE BLOCKOUT IS TO BE INSTALLED.
2. ENSURE BLOCKOUT DIMENSIONS MEET REQUIREMENT OF EXPANSION JOINT MANUFACTURER.
3. CONTRACTOR SHALL, WITH MANUFACTURER, VERIFY FIELD INSTALLATION WIDTH BASED ON TEMPERATURE CONDITIONS.
4. TOOL AND SEAL CONTROL JOINTS IN NEW BLOCKOUT AT 3'-0" ON CENTER.

6.5 TYPICAL DETAIL - EXPANSION JOINT REPLACEMENT - ELASTROMERIC CONCRETE EDGE
NTS

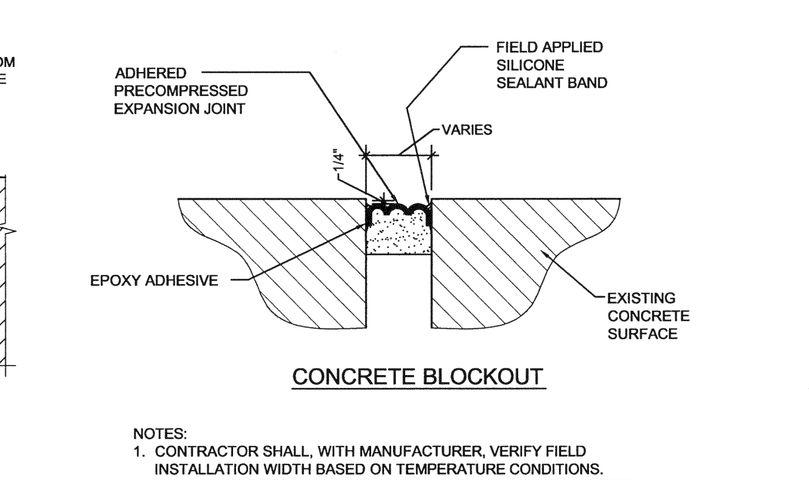

NOTES:
1. CONTRACTOR SHALL, WITH MANUFACTURER, VERIFY FIELD INSTALLATION WIDTH BASED ON TEMPERATURE CONDITIONS.
2. SPLICE PRE-COMPRESSED JOINTS BY PUSHING SILICONE COATED ENDS TOGETHER.

6.3 6.2 TYPICAL DETAIL - EXPANSION JOINT INSTALLATION - PRECOMPRESSED (PEDESTRIAN)
NTS

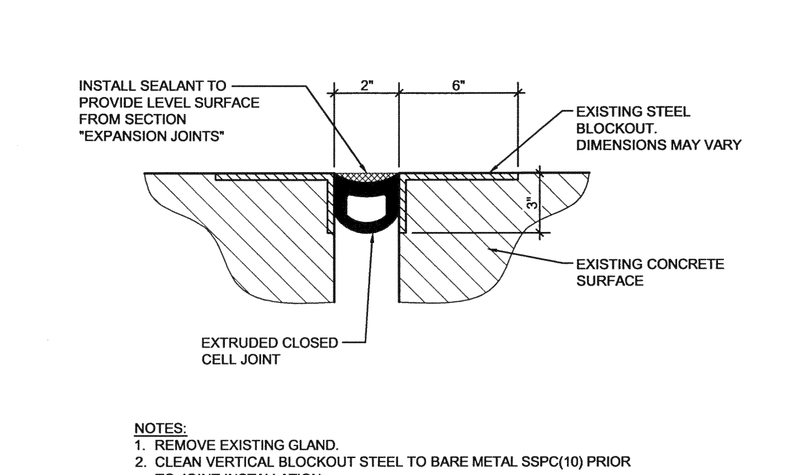

NOTES:
1. REMOVE EXISTING GLAND.
2. CLEAN VERTICAL BLOCKOUT STEEL TO BARE METAL SSPC(10) PRIOR TO JOINT INSTALLATION.
3. ENSURE BLOCKOUT DIMENSIONS MEET REQUIREMENT OF EXPANSION JOINT MANUFACTURER.
4. CONTRACTOR SHALL, WITH MANUFACTURER, VERIFY FIELD INSTALLATION WIDTH BASED ON TEMPERATURE CONDITIONS.

6.1 TYPICAL DETAIL - EXPANSION JOINT REPLACEMENT - EXTRUDED CLOSED CELL
NTS

REVISED 08/31/10

WALTER P MOORE
WALTER P. MOORE AND ASSOCIATES, INC.
1301 MCKINNEY, SUITE 1100
HOUSTON, TEXAS 77010-3032
PHONE: 713.630.7300 FAX: 713.630.7393
HOUSTON DALLAS TAMPA ATLANTA ORLANDO KANSAS CITY AUSTIN LOS ANGELES LAS VEGAS
Walter P. Moore and Associates, Inc.
TBPE Firm Registration No. 1856
STATE OF TEXAS
MARK ERIK WILLIAMS
94240
LICENSED PROFESSIONAL ENGINEER
08/31/10

CITY OF HOUSTON
BUILDING SERVICES DEPARTMENT

THEATER DISTRICT PARKING – STRUCTURAL ASSESSMENT AND REPAIRS DRAWINGS FOR BIDDING AND CONSTRUCTION

DETAILS

FILE NO. C62164	
WBS NO. B-000087-0002-4	
DRAWING SCALE	
VERT. AS SHOWN HORIZ. AS SHOWN	
CITY OF HOUSTON PM	
JAMES REDDINGTON, JR.	
SHEET NO. 15 OF 20	

FILE: P:\003\2010\10002-00\CADD\Sheets\SHT-15- DTLS.dwg