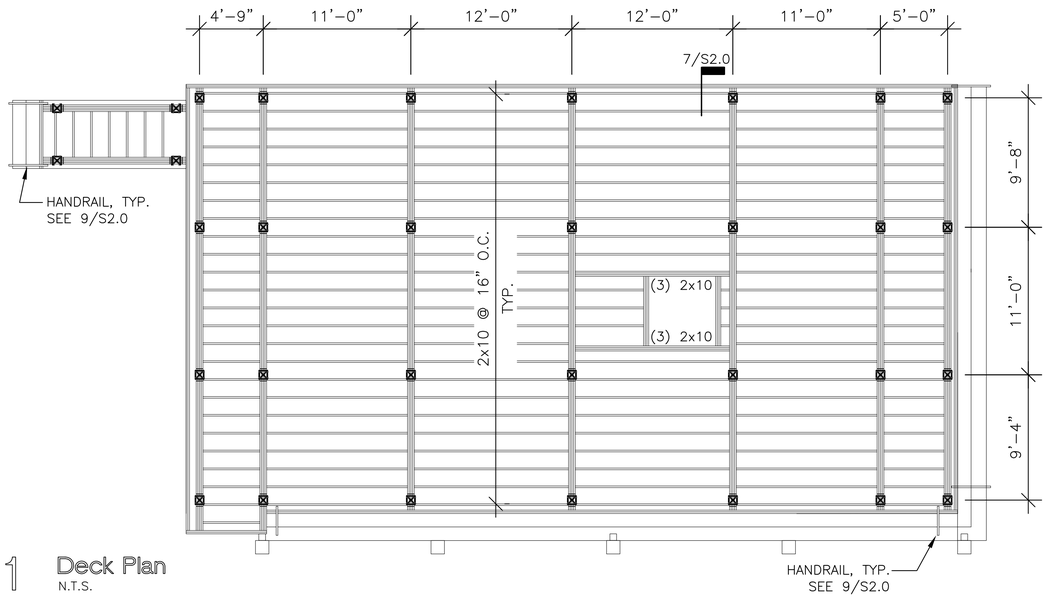

1 Deck Plan
N.T.S.

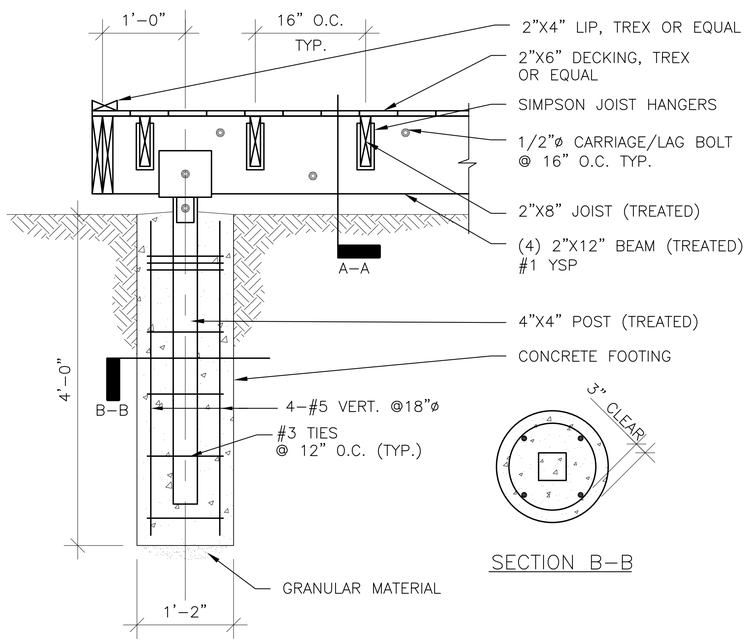

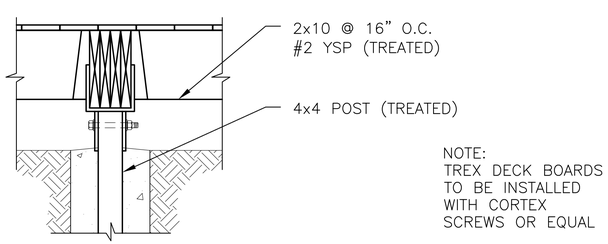

NOTE:
TREX DECK BOARDS
TO BE INSTALLED
WITH CORTEX
SCREWS OR EQUAL

SECTION A-A

7 Typical Column at Deck
N.T.S.

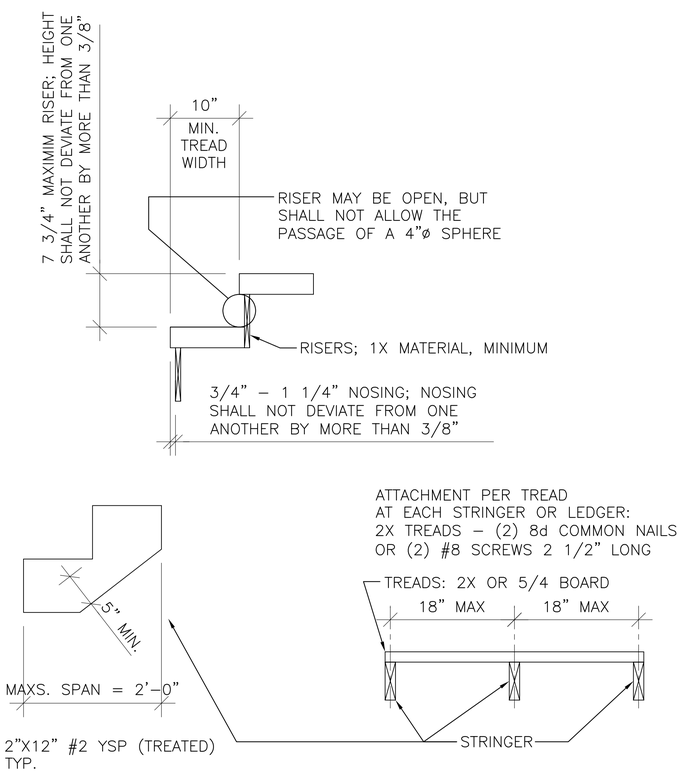

8 Typical Stair Detail
N.T.S.

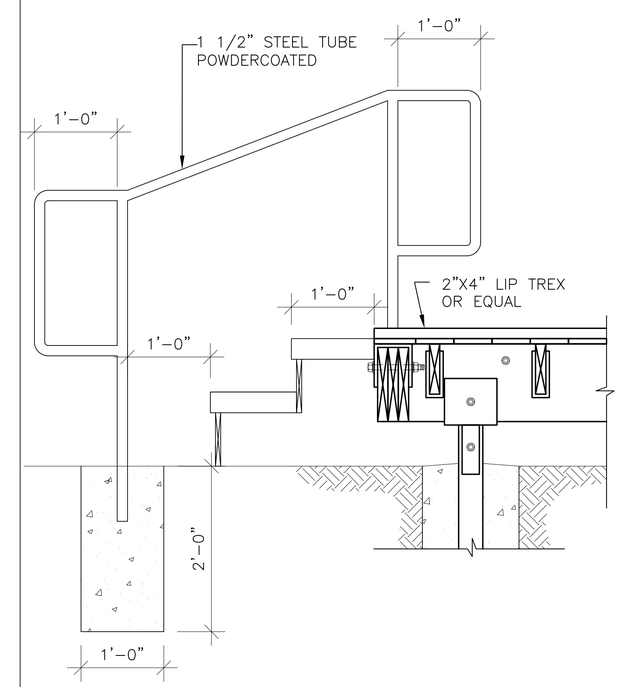

9 Typical Handrail Detail
N.T.S.

ISSUE LOG

NO.	DATE	DESCRIPTION
1	09/14/10	FOR BID

Lauren Griffith Associates
Landscape Architecture and Planning
5252 Westchester Street, Suite 170
Houston, Texas 77005
(713)838-7120/fax(713)839-7778
lgriffith@laurengrifflhassociates.com

WHITE OAK STUDIO
LANDSCAPE ARCHITECTURE
7413 Westview Drive, Ste. E
Houston, TX 77055
Tel 713/682-2638

ROBERT L. WRIGHT & ASSOCIATES, INC.
5252 Westchester, Suite 170
Houston, TX 77005
Tel 713/522-2210

SEAL:

Parks Capital Improvement Program
for City of Houston
General Services Department and
Parks & Recreation Department

PARK NAME :

Memorial Park Tennis Center Deck
1500 Memorial Loop
Houston, Texas 77008

CITY OF HOUSTON
GENERAL SERVICES DEPARTMENT

REVIEWED :

PARKS PROGRAM MANAGER
HERMANN PARK CONSERVANCY
PROJECT MANAGER

DATE : 08/19/10
WBS No : XXXXXX-XXXX-X
SCALE : AS NOTED
DRAWN BY : LMD
CHECKED BY : RLW

SHEET TITLE :
DECK PLAN AND DETAILS

SHEET NO. :
S - 2.0

CITY DWG. NO. :