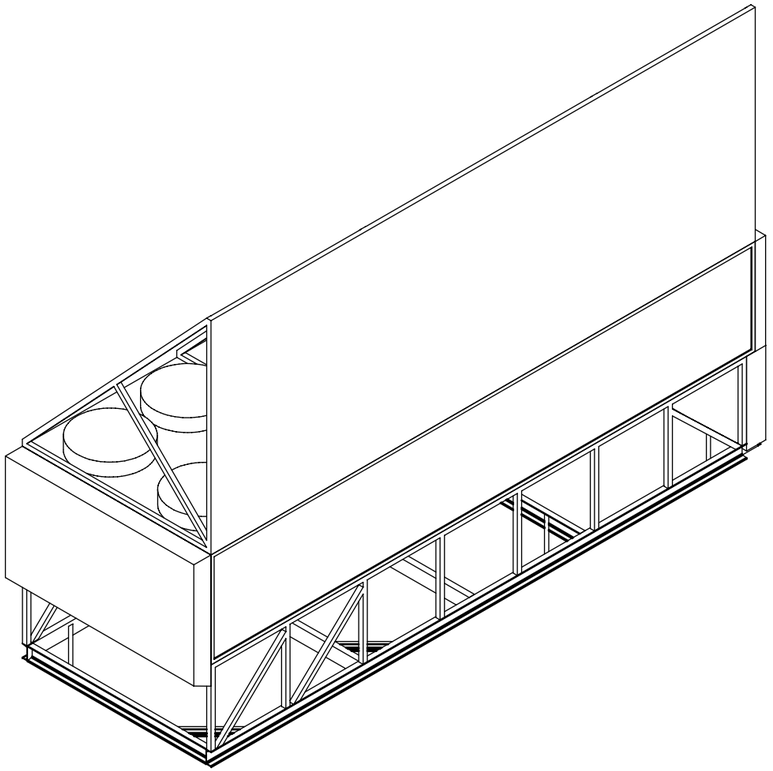

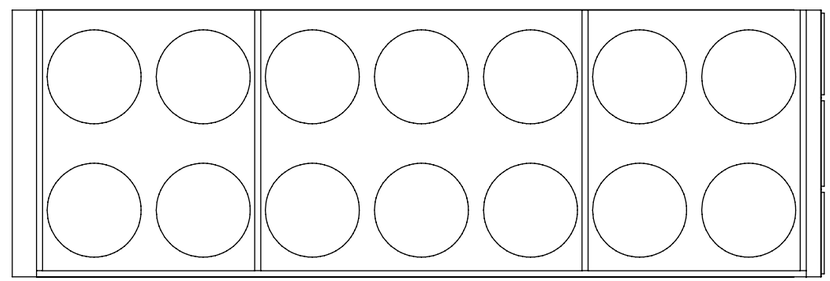

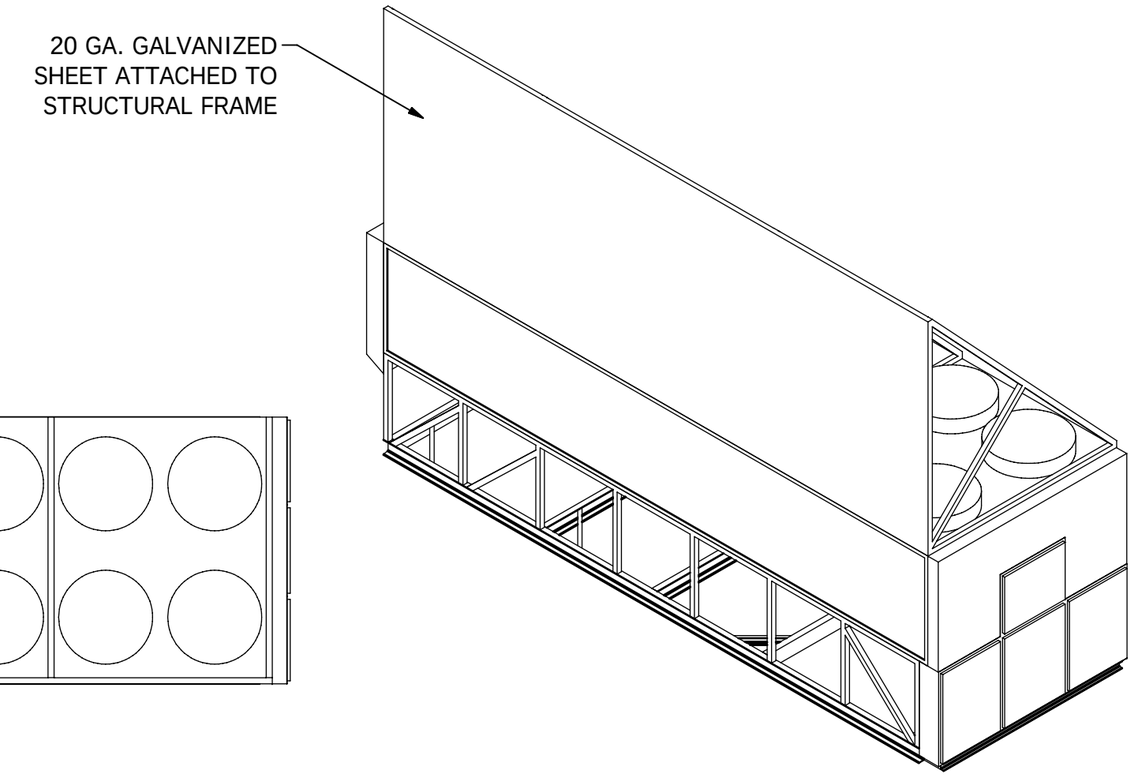
20 GA. GALVANIZED
SHEET ATTACHED TO
STRUCTURAL FRAME

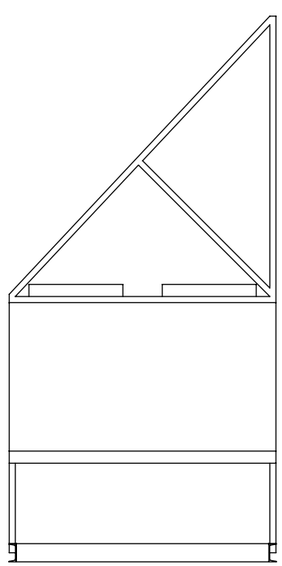

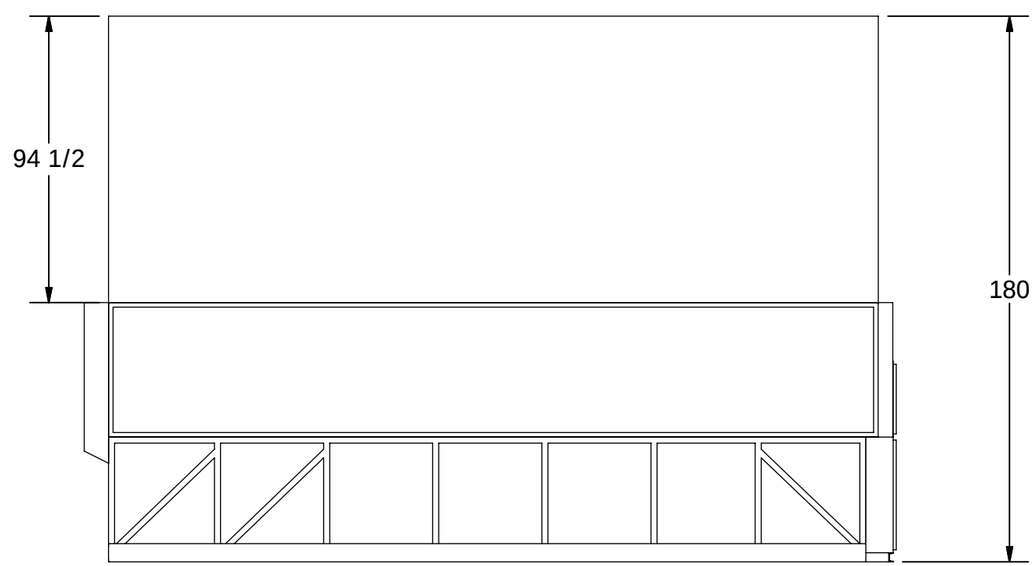
94 1/2
180

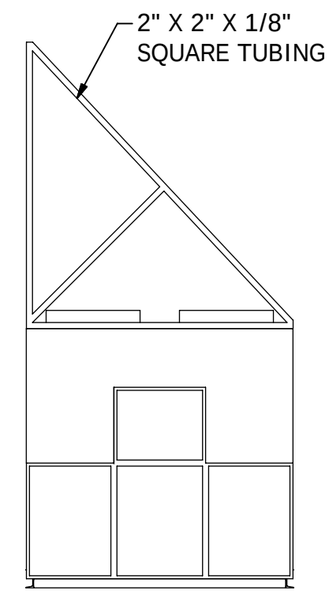
2" X 2" X 1/8"
SQUARE TUBING