Self-Serve Aviation Fueling System
Supply, Installation, and Maintenance Specification
Ellington Airport
510 Ellington Field
Houston, Harris County, Texas 77034
Facility 43528

Prepared for:

Mr. Shawn Chittum
Houston Airport System
City of Houston
510 Ellington Field
Houston, Texas 77034

December 2013

Project No.: 5008-0017

SKA Consulting, LP
1515 Witte Road, Suite 150
Houston, Texas 77080
P: 713.266.6056
F: 713.266.0996
www.skaconsulting.com

SELF-SERVE AVIATION FUELING SYSTEM
SUPPLY, INSTALLATION, AND MAINTENANCE SPECIFICATION
ELLINGTON AIRPORT

510 ELLINGTON FIELD
HOUSTON, HARRIS COUNTY, TEXAS 77034
FACILITY 43528

SKA PROJECT NO. 5008-0017

Prepared for:

HOUSTON AIRPORT SYSTEM
CITY OF HOUSTON
510 ELLINGTON FIELD
HOUSTON, TEXAS 77034

Submitted by:

SKA CONSULTING, L.P.
1515 WITTE ROAD, SUITE 150
HOUSTON, TEXAS 77080

Prepared by:

MIKE SCHULTZ, P.E.
PRINCIPAL ENGINEER

Signature

December 2013

TEXAS REGISTERED ENGINEERING FIRM NO. F-005009
TEXAS REGISTERED GEOSCIENCE FIRM NO. 50011

STATE OF TEXAS
PAUL MICHAEL SCHULTZ
68765
REGISTERED
PROFESSIONAL ENGINEER

12/10/13

Table of Contents

Self-Serve Aviation Fueling System Supply, Installation, and Maintenance Specification..... 1

Division 01 – General Requirements..... 1
- 01 11 00 Summary of Work..... 1
- 01 25 00 Substitutions..... 1
- 01 31 00 Project Management and Coordination 1
- 01 32 00 Construction Progress Documentation 2
- 01 33 00 Submittal Procedures 2
- 01 35 00 Special Procedures 2
- 01 50 00 Temporary Facilities and Controls 4
- 01 80 00 Performance Requirements..... 4

Division 03 – Concrete 5
- 03 11 00 Concrete Forming..... 5
- 03 20 00 Concrete Reinforcing..... 5
- 03 30 00 Cast-In-Place Concrete 5

Division 07 – Thermal and Moisture Protection 7
- 07 40 00 Roofing and Side Panels 7

Division 26 – Electrical 8
- 26 20 00 Low-Voltage Electrical Distribution 8
- 26 41 00 Facility Lightning Protection..... 9
- 26 56 00 Exterior Lighting 9

Division 27 – Communications 10
- 27 20 00 Data Communications 10

Division 28 – Electronic Safety and Security 11
- 28 20 00 Electronic Surveillance 11

Division 31 – Earthwork 12
- 31 23 00 Excavation and Fill 12

Division 32 – Exterior Improvements.....13
- 32 31 00 Fences and Gates.....13

Division 33 – Utilities.....14
- 33 01 50 Inspection and Maintenance of Fueling System 14
- 33 40 00 Storm Damage Utilities.....15
- 33 52 43 Aviation Fuel Distribution.....15
- 33 56 43.13 Aboveground Aviation Fuel Storage Tanks.....17

LIST OF ATTACHMENTS

NO.	ATTACHMENT
1	Hubbell, Typical Light Fixtures
2	Electronic Surveillance Equipment List
3	Inspection and Maintenance Checklist
4	Typical Spill Box Specification
5	Typical Transfer Pump Specification
6	Typical Transfer Pump Motor Specification
7	Typical Filter Vessel Specification
8	Typical Fuel Sump Specification
9	Dresser Wayne, Typical Fuel Dispenser Specification
10	Hannay, Typical Hose Reel Specification
11	Hannay, Typical Grounding Reel Specification
12	QT Technologies, M3000 Pro Payment Card Reader Specification
13	QT Technologies, Multidisplay Specification
14	Modern Welding, Typical 12,000-Gallon Aboveground Storage Tank Specification
15	Tnemec 61 Epoxy Coating Specification

Self-Serve Aviation Fueling System
Supply, Installation, and Maintenance Specification__

DIVISION 01 – GENERAL REQUIREMENTS

01 11 00 SUMMARY OF WORK

A. The proposed project is for the supply, installation, and maintenance of a self-service, aviation gasoline fueling system at the Houston Airport System's (HAS) Ellington Airport. The proposed fueling system will be unmanned. The fueling system will incorporate fuel offloading, storage, filtration, dispensing and point-of-sale systems. Ancillary project needs for electrical service, communications, and storm water management are incorporated.

B. The subject property of the proposed aviation fueling system installation is: Ellington Airport, 510 Ellington Field, Houston, Harris County, Texas 77034. This facility is currently registered with the TCEQ as PST Facility ID No.: 0043528. According to the TCEQ records, this facility contains: 2 – 2,000-gallon aboveground storage tanks (ASTs), 2 - 5,000-gallon ASTs and 2 – 2,649-gallon underground storage tanks (USTs). The proposed work will not affect any of these existing registered ASTs or USTs.

C. An owner or operator who intends to install a petroleum storage tank (PST) system must ensure that the procedures used be in compliance with the Texas Commission on Environmental Quality (TCEQ) Petroleum Storage Tank (PST) rules (30 TAC Chapter 334), industry standards, and applicable federal, state, and local governmental regulations.

D. The project area is shown more specifically in the ***Drawings***.

01 25 00 SUBSTITUTIONS

A. Any substitutions to the procedures, requirements, or items referenced in these specifications shall be submitted to the HAS's Engineer for approval before making the substitution. Any item submitted by the Contractor as an equivalent to a specified item shall be submitted to the HAS's Engineer for approval before making the substitution.

01 31 00 PROJECT MANAGEMENT AND COORDINATION

A. The HAS's Engineer for this project is Mike Schultz, P.E., SKA Consulting, L.P., 1515 Witte Road, Houston, TX 77080 at telephone 713-266-6056 or cell 281-813-6434. SKA will provide Mr. Schultz or a designated representative to be on the project site during critical portions of the project work.

B. The HAS's representative for the project is Mr. Shawn Chittum, Airport Operations Supervisor, Ellington Airport, 510 Ellington Field, Houston TX 77034 at telephone 713-847-4211 or cell 713-304-3952. Mr. Chittum or a designated representative can be contacted as the project owner.

C. The HAS's Engineer shall provide a completed *Construction Notification Form* (TCEQ-0495) to the TCEQ Registration and Self-Certification Team at least 30 days in advance of any

pending petroleum storage tank construction activity in accordance with 30 TAC §334.126 (relating to Installation Notification).

D. The Contractor will notify the local Fire Marshal of the intent to install a AST system. The Contractor will obtain the necessary permits (including building permits and fees) prior to the commencement of the AST installation activities.

E. The HAS's Engineer will contact the TCEQ Region 12 Office at least 24 to 72 hours in advance of initiating construction activities in accordance with 30 TAC §334.126.

F. During the course of the project, the Contractor, the HAS's Engineer and the HAS representative may have periodic progress meetings either at the project site or at HAS's office at Ellington. These meetings are for a review of completed work, preparation for upcoming work, resolution of problems and issues, and a review of the project schedule.

G. The HAS's Engineer will prepare As-Built Plans for submission to the Houston Airport System upon project completion.

H. The HAS's Engineer will submit registration information for the new AST to be installed.

01 32 00 CONSTRUCTION PROGRESS DOCUMENTATION

A. The Contractor shall develop a project construction schedule and provide the schedule to the HAS's Engineer at least one week before initiating construction activities.

B. The Contractor shall prepare daily activity logs and submit these to the HAS's Engineer weekly.

C. The Contractor will provide the HAS's Engineer with all post-installation testing reports.

01 33 00 SUBMITTAL PROCEDURES

A. During the course of the project, the Contractor may offer or request substitutions to the procedures, requirements, or items referenced in these specifications.

B. Such submittals shall be documented in writing to the HAS's Engineer along with a justification and any specification sheets or shop drawings, for the proposed substitution. Email is an acceptable form of submission.

C. If the substitution is acceptable, the Contractor will be notified in writing by the HAS's Engineer.

01 35 00 SPECIAL PROCEDURES

A. The Contractor shall prepare a written health and safety plan (HASP) for establishing safe working conditions at the subject property. The HASP will include scope of work, location of the nearest hospital; site-specific material safety data sheets (MSDSs), emergency phone number contact list, site-specific safety hazards, and general safety hazards. The provisions of this plan are mandatory for all personnel and subcontractors assigned to the

AST installation activities. The Contractor shall provide the HASP to the HAS's Engineer at least one week before initiating construction activities.

B. The HAS's Engineer will review the HASP for completeness before initiating construction activities on the subject property.

C. The installation of the AST system can only be performed by a qualified on-site supervisor who holds a valid TCEQ Class "A" license and who is employed by a TCEQ-registered contractor in accordance with 30 TAC Chapter 30.

D. Current certificates of registration must be provided to the HAS's Engineer.

E. The Contractor must comply with Occupational Safety and Health Administration (OSHA) 29 Code of Federal Regulations (CFR) 1926 Subpart P – Excavation Requirements for all excavation and trenching activities when excavating to set the oil/water separator and storm water piping. In addition, the Contractor must also comply with the COH Division 1, Section 01561 "Trench Safety System" guidance document.

F. The Contractor must take all precautions necessary to protect employees working in or near the tank excavation. These precautions should include but are not limited to:

    1. Locate and protect any utility installations near the excavation before opening the excavation.
    2. Secure the walls of the excavation.
    3. Prevent exposure of employees to hazardous fumes from the excavation.
    4. Protect employees from hazards associated with water accumulation in the excavation.
    5. Erect barricades to prevent unauthorized vehicles or pedestrian traffic.
    6. Inspect the excavation each day, prior to beginning work

G. The HAS's Engineer has utilized maps provided by the Houston Airport System to show known underground and aboveground utilities on the subject property on the Drawings. The Contractor shall field verify the mapped locations. In addition the Contractor shall notify Dig Tess (Texas Excavation Safety Service) at least 72 hours prior to any excavation activities. Dig Tess will identify and field mark all privately-owned and operated utilities. The Contractor is responsible for locating and avoiding underground and aboveground utilities.

H. The HAS's Engineer and a representative from the Contractor shall meet on-site to review the site conditions at least 48 hours prior to any excavation activities.

I. Aboveground utilities shall be assessed at the time of the site meeting described above.

J. Surveyors have previously established a temporary benchmark at 30.10 ft (NAVD88) with a box cut at the southeast corner of the concrete sidewalk on the east side of the gate just north of the project area. The foundation slab must be properly sloped to control storm water; therefore, the Contractor shall maintain a temporary site benchmark on which to base form elevations.

K. The Contractor shall pay all permitting fees.

01 50 00 TEMPORARY FACILITIES AND CONTROLS

A. The Contractor shall access the project area from Kirk Avenue at the existing gate as shown on the ***Drawings***.

B. The Contractor shall provide and install temporary fencing around the project area as shown on the ***Drawings***. Temporary fencing will be removed by the Contractor upon project completion.

C. The temporary fencing shall be galvanized woven-wire, chain link 8 feet high and include a flashing red light every 10 feet along the fence.

D. All construction materials and debris must remain inside the temporary fencing at all times.

E. The project area has no existing electrical service. The Contractor is responsible for bringing electrical service to the project area to serve temporary construction needs and for permanent service. Centerpoint Energy currently has three-phase electrical service available on the west side of Kirk Avenue north of the project area. Electric service shall be brought overhead to the project area and the Contractor shall take electric service underground from a power pole to be set by Centerpoint Energy outside of the Ellington Airport fence to the fuel system.

F. The electrical service shall be 120/240V 4-wire, 3-phase, 50 KVA.

G. The fuel system will require remote monitoring for fuel management, payment processing, and security. Therefore, the Contractor will establish telecommunication service to the project area. Existing telephone service is available at the power pole on the west side of Kirk Avenue.

01 80 00 PERFORMANCE REQUIREMENTS

A. The Contractor shall provide all equipment and installation described in this specification.

B. The Contractor shall provide startup testing and training upon completion of construction.

C. The Contractor shall provide all manuals and manufacturer's warranties upon completion of construction.

DIVISION 03 - CONCRETE

03 11 00 CONCRETE FORMING

A. Concrete slab forms can be either 2x dimensional lumber or steel, or concrete can be hand worked to form the swale for containing storm water. All forms shall be adequately braced.

B. Perimeter grade beams shall be excavated on to a depth of 18 inches and shall be 9 inches wide as shown on the ***Drawings***.

C. Intermediate grade beams shall be excavated on a10-foot spacing in each direction or as shown on the ***Drawings*** and shall be 18 inches deep and shall be 9 inches wide.

D. Loose material shall be removed from the grade beams before concrete is poured.

E. The slab shall be placed in a monolithic pour with no seams or joints.

03 20 00 CONCRETE REINFORCING

A. All cast-in-place concrete shall be reinforced with steel reinforcing bars of the sizes and at the locations noted on the ***Drawings***. The concrete foundation slab shall contain a double mat of #5 rebars on 18-inch centers and will be a minimum of 8 inches thick.

B. Where noted on the ***Drawings***, reinforcing bars shall be placed in plastic haris to ensure their proper placement in the slab.

C. At no location shall reinforcing wire mesh be used.

03 30 00 CAST-IN-PLACE CONCRETE

A. The fueling system will be installed on a structural slab-on-grade foundation as shown in the ***Drawings***.

B. Concrete reinforcement shall be placed as described in **03 20 00 CONCRETE REINFORCING** and as shown on the ***Drawings***.

C. The foundation slab shall be poured monolithically with no joints in order to contain potentially contaminated storm water.

D. The foundation slab has a 2% slope to the south for the collection of storm water.

E. The concrete to be used shall have the following properties: 4,000 pounds per square inch compressive strength (minimum 6-sack mix), air entrainment of 6-8%, and 3-4” slump.

F. No water shall be added to the concrete once placed. Water may be used as a mist to delay excessive evaporation during curing.

G. Material testing of the concrete shall not be required.

H. The foundation slab shall have a broom finish.

I. The foundation slab shall have an above-grade swale 6-inches high as shown in the ***Drawings*** in order to control storm water.

J. The Contractor shall provide and install pipe guards with a minimum strength equivalent to a 4-inch diameter Schedule 40 steel pipe filled with concrete as directed by the City of Houston LSB Standard 13. The top of the pipe guards shall be at least 3 feet above the ground and the pipe guards shall extend at least 3 feet into a 15-inch wide concrete footing, as shown in the ***Drawings***. The spacing between bollards is 4 feet center to center and not less than 5 feet from the tank.

DIVISION -7 – THERMAL AND MOISTURE PROTECTION

07 40 00 ROOFING AND SIDE PANELS

A. The Contractor shall provide and install a metal canopy as shown in the ***Drawings*** to protect the pumping and dispensing equipment from direct rainfall and sun exposure.

B. The canopy frame will be constructed of galvanized steel square tube and C-channel with a 10-foot by 10-foot footprint as noted in the ***Drawings.*** Posts will be 9-feet high above grade.

C. A C-channel will be used to create the roof pitch.

D. All structural member connections will be welded.

E. Corner posts will be embedded 18 inches into concrete in 9-inch diameter by 24-inch deep footings. The two southern footings shall be doweled into the concrete foundation slab with rebar.

F. The roofing material will be 36-inch wide by 72-inch long corrugated metal panels of at least 24 gauge minimum thickness.

G. Roofing panels will have a tan finish color to match existing adjacent structures.

H. A ridge cap of similar material will be provided.

I. Roofing panels will be assembled with self-drilling screws to create an approximate one-foot overhang.

J. Undercanopy lighting and flood lighting at 3 corners of the canopy will be installed as shown in the ***Drawings***.

DIVISION 26 – ELECTRICAL

26 20 00 LOW-VOLTAGE ELECTRICAL DISTRIBUTION

A. As required in **01 50 00 TEMPORARY FACILITIES,** the Contractor shall have established 120/240V, 3-phase, 4-wire overhead electrical service capable of 50 KVA by Centerpoint Energy to the project area for temporary and permanent service.

B. Electrical service can be extended from an existing 3-phase electrical service available on the west side of Kirk Avenue north of the project area.

C. Centerpoint Energy shall extend the electrical service overhead to a new pole set outside of the Ellington Airport fence, and just west of the project area.

D. The Contractor shall extend the electrical service from the Centerpoint Energy pole underground to the project area as shown on the ***Drawings***.

E. All electrical materials, equipment and installation associated with the Fuel System shall be in accordance with Article 515 of the National Electrical Code, latest published edition.

F. The emergency shutoff must be at least 20 feet from the dispenser as shown in the ***Drawings*** and provide for disconnection of all conductors including grounds in accordance with NEC 514.11(C).

G. Contractor shall provide and install all fueling system circuits in the electrical panels as shown on the ***Drawings***. Electrical panels shall be NEMA 8 rated per the ***Drawings***.

H. The circuits from the control panel shall be run in electrical metallic tubing (EMT) conduit to the respective equipment or fixtures through openings designed in the manufacturer's installation manuals using a wire way or suitable metallic fittings. Flexible conduit shall not be used. Raceways and electrical equipment shall be bonded and grounded in accordance with NEC 514.16 and 501.30.

I. A blue 2" x 3" label will be attached to each panel board stating the fault current and date of calculation.

J. A grounding electrode shall be installed adjacent to the electrical panels consisting a 5/8" diameter copper-coated steel rod installed to a depth of 8 feet.

K. Minimum wiring and breaker sizes are provided in the ***Drawings***. The breaker for the 10-Hp transfer pump shall be an inverse-time type breaker in accordance with NEC Table 430.52. All other breakers can be instantaneous-trip type breakers.

L. All circuit conduits shall be sealed and rendered explosion proof following inspection in accordance with the electrical classification shown on the ***Drawings***.

M. The emergency disconnect shown in the ***Drawings*** shall provide for disconnection of all conductors leading to the dispenser including the ground conductor.

N. Note that the QT M3000 Pro payment card reader is not explosion proof and must be mounted at least 18 inches horizontally from the dispenser or hose reel and 3 feet horizontally from the transfer pump. The head of the M3000 Pro must always be 18 inches above the grade where the dispenser, hose reel, or transfer pump are mounted.

26 41 00 FACILITY LIGHTNING PROTECTION

A. The existing light standard and power pole to be installed by Centerpoint Energy at the project area are required to have lightning protection for the safety of the fueling system.

B. Contractor shall verify with Centerpoint Energy that the proposed power pole is protected against lightning damage.

C. The existing light standard shall be fitted with a strike termination device, down conductor, and grounding rod in accordance with National Fire Protection Association 780 Chapters 4 and 5.

D. The Contractor may engage a lightning protection subcontractor to design and install, if necessary, the appropriate lightning protection system.

26 56 00 EXTERIOR LIGHTING

A. The Contractor shall provide and install 3 flood light fixtures on the northwest, northeast, and southeast corners of the proposed canopy in order to illuminate the fueling system approach and fueling area.

B. Floodlights shall be 120V and a minimum 250W each with high-pressure sodium lamps.

C. Typical flood light fixture is the Hubbell Laramie Series LFM with a 250W high-pressure sodium lamp. Specifications for this flood light are provided in ***Attachment 1***.

D. Lighting fixtures should be mounted with a knuckle mount for adjustment.

E. The Contractor shall provide and install 2 under canopy lighting fixtures to provide illumination for the card reader, dispenser, and hose reel for nighttime fueling.

F. Under canopy light fixtures shall be 120V and a minimum of 150W each with a metal halide lamp.

G. A typical under canopy light fixture is the Hubbell UCL with a 150W metal halide lamp. Specifications for this under canopy light fixture are provided in ***Attachment 1***.

H. The Contractor may submit an equivalent flood light fixture or under canopy light fixture to the HAS's Engineer for approval.

I. Wiring and circuits for the exterior lighting are provided as shown on the ***Drawings***.

DIVISION 27 – COMMUNICATIONS

27 20 00 DATA COMMUNICATIONS

A. As required in **01 50 00 TEMPORARY FACILITIES,** the Contractor shall have established digital and analog telephone service to the project area for data communications.

B. Communications for the fueling system must serve several purposes as described below.

C. The QT M3000 Pro payment card reader will require a dedicated analog phone line to authorize credit card purchases.

D. The QT M3000 Pro payment card reader is also equipped with Site Minder software that will allow remote monitoring of the fuel inventory (automatic tank gauging) as well as other payment processing services.

E. Security monitoring equipment is proposed for the fueling system (see **28 20 00 ELECTRONIC SURVEILLANCE** for more details.

DIVISION 28 – ELECTRONIC SAFETY AND SECURITY

28 20 00 ELECTRONIC SURVEILLANCE

A. The Contractor shall provide an electronic video surveillance camera system for the fueling system as listed in ***Attachment 2***.

B. The HAS will provide for the installation of the electronic video surveillance system by others.

DIVISION 31 – EARTHWORK

31 23 00 EXCAVATION AND FILL

A. The Contractor shall saw cut and remove the asphalt pavement overlying the project area sufficient to provide room for concrete forming.

B. Pavement maybe broken by a jackhammer or loader-mounted breaker.

C. Broken pavement shall be stockpiled for disposal or may be placed directly into disposal containers (i.e. roll-off boxes) for recycling or disposal.

D. All broken pavement debris shall be maintained within the temporary fencing.

E. The Contractor is responsible for disposal of broken pavement.

F. The work area shall be broom swept to remove pavement debris that could become airborne.

G. The asphalt pavement should be underlain by cement-stabilized soil or a crushed stone base course. This base material shall be excavated to a depth of 8 inches below existing grade to allow for the installation of the foundation slab. Grade beams shall be excavated per **03 11 00 CONCRETE FORMING**.

H. Upon completion of subgrade preparation, grade beams will be excavated as previously described in **03 11 00 CONCRETE FORMING**.

I. Upon completion of grade beam excavation, the Contractor shall excavate for the oil/water separator, control manhole, and associated piping (further described in **33 40 00 STORM DRAINAGE UTILITIES**).

DIVISION 32 – EXTERIOR IMPROVEMENTS

32 31 00 FENCES AND GATES

A. Before beginning any construction activity, the Contractor shall provide and install temporary fencing around the project site as shown in the ***Drawings***.

B. After installation of temporary fencing, project site access will be through the gate on Kirk Avenue.

C. Temporary fencing shall be maintained until the project's acceptance by HAS.

D. Permanent security fencing will be provided and installed by the Contractor around the fuel tank and fuel pumping and filtration equipment as shown in the ***Drawings***.

E. Permanent fencing will consist of galvanized, woven-wire, chain link fencing, 8 feet in height with double arms for barbed wire and galvanized ties.

F. Arms 12-inchs long, set at 45-degrees, with 3 strands of barbed wire on each arm will be added to the posts above the fence fabric.

G. Permanent fencing posts will be 2 3/8-inch diameter, Schedule 40, galvanized steel line posts, and 2 7/8-inch diameter, Schedule 40, galvanized steel corner and gate posts.

H. Posts shall be fastened to the concrete foundation slab using galvanized steel floor flanges and minimum ¾" x 4" Hilti-type fasteners.

I. Post spacing shall be no more than 10 feet.

J. Top rails will be set in 7-inch sleeves.

K. A 4-foot wide gate will be provided as shown in the ***Drawings.***

L. The completed fence shall be grounded with a ¾" x 8' copper clad grounding rod and #2 bare copper wire. The grounding wire will be welded to the grounding rod and clamped to the fence. Bolts and clamps shall be galvanized or stainless steel.

DIVISION 33 – UTILITIES

33 01 50 INSPECTION AND MAINTENANCE OF FUELING SYSTEM

A. The Contractor shall provide fuel system inspection and maintenance services for a period of 5 years after the fuel system goes into service.

B. The Contractor will provide a one-year parts and labor warranty on all equipment and functions of the fuel system for the first year that the fuel system is in service. There will be no charge to the HAS for this one-year warranty.

C. The Contractor's warranty will run concurrently with any manufacturer's warranty for the first year that the fuel system is in service.

D. Costs for inspection and maintenance of the fuel system shall be provided by the Contractor on an annual basis for years 2-5 after the fuel system is in service.

E. The Contractor is expected to perform those tasks during its inspection and call-out visits necessary to keep the fuel system in safe operation.

F. Inspection and maintenance visits are expected to be monthly unless there is a call-out for the fuel system being out of service or in an unsafe condition.

G. Daily fuel sumping will be performed by HAS. Water collected from sumping will be disposed by HAS.

H. Disposal of wastes associated with monthly inspections and maintenance will be the responsibility of the Contractor.

I. Tasks to be performed during monthly inspections include checking hoses and cleaning nozzles, a free water check, checking and replacing signs and placards, inspection of the storage tank interior and the floating suction, checking controls and emergency shutoffs, checking/replacing fire extinguishers, checking for bonding and grounding continuity, lubrication as needed, and removal of any debris and trash (general housekeeping). A proposed checklist to be used by HAS is provided in ***Attachment 3***.

J. Additional maintenance tasks will include semi-annual filter replacement, annual meter calibration and adjustment, annually check and clean line strainers, annually check, clean and adjust vents, and annually calibrate the pressure gauge.

K. The Contractor shall include a small parts and expendables allowance in its annual operation and maintenance cost. Major mechanical or electrical failures (>$1,000 cost) not covered by manufacturer warranties will be handled by HAS.

L. The Contractor may subcontract the inspection and maintenance of the fuel system, but the subcontractor is subject to the approval of HAS and all the requirements for airport entry.

33 40 00 STORM DRAINAGE UTILITIES

A. The fueling system will have a storm water management system to prevent the release of impacted storm water from spilled fuel.

B. The storm water management system will consist of a drop inlet, normally-closed valve, and associated piping as shown on the ***Drawings***.

C. The foundation slab is sloped at 2% to the south where storm water will be routed in a gutter to the southwest corner the foundation slab.

D. The storm water flows through the drop inlet and a 2-inch diameter PVC pipe to the Ellington Airport storm water collection manhole northwest of the fuel system.

33 52 43 AVIATION FUEL DISTRIBUTION

A. The Contractor shall fabricate and install a pump, filtration, and dispensing skid (Skid) as shown in the ***Drawings***.

B. All fuel pumping, filtration, and dispensing equipment shall be mounted on the Skid as shown in the ***Drawings***.

C. Cross brace locations for the Skid may be modified from the locations shown in the Drawings to better support the fuel pumping, filtration, and dispensing equipment.

D. The Skid shall be galvanized, primed and painted white to match the color of the fuel storage tank.

E. Fuel will be transferred to storage through a Pomeco 15-gallon, spill containment box equipped with a 4-inch fill port. A typical spill box specification is provided in ***Attachment 4***.

F. All piping shall be Schedule 10 stainless steel and sized as shown on the ***Drawings***. Joints on 3-inch diameter piping shall be welded or welded and flanged.

G. The Skid fuel transfer pump will be a 3” Blackmer Pump or equivalent with stainless steel pump drain and a Blackmer 4.19:1 gear reducer or equivalent. The fuel transfer pump shall be capable of a minimum of 200 gallons per minute (gpm). A typical pump specification is provided in ***Attachment 5***.

H. The fuel transfer pump will be driven by a Baldor 10 Hp explosion-proof motor (230V, 3P) or equivalent. A typical motor specification is provided in ***Attachment 6***.

I. Fuel being unloaded to storage will be filtered through a Facet filter vessel and elements (5th edition) or equivalent. The filter vessel shall be capable of filtering a minimum of 200 gpm. A typical filter vessel is provided in ***Attachment 7***.

J. The filter vessel will be equipped with a Gems Floating Switch water slug or equivalent, Gammon differential pressure gauge or equivalent, Armstrong air eliminator or equivalent, and a Taylor pressure relief valve or equivalent.

K. A 15-gallon stainless steel fuel sump with electric pump will be provided. A typical fuel sump specification is provided in ***Attachment 8***.

L. Fuel will be dispensed by a Dresser Wayne model 6200 dispenser capable of 20 gpm and equipped with a 1 Hp suction pump, or equivalent. A typical dispenser specification is provided in ***Attachment 9***.

M. The Contractor shall provide signage with instructions to customers on how to operate the fuel dispensing system.

N. The dispenser will feed a Hannay EPJ electric rewind hose reel or equivalent with 75 feet of 1-inch diameter hose. A typical hose reel specification is provided in ***Attachment 10***.

O. The fuel hose will be attached to a 1-inch OPW overwing nozzle.

P. A 4-inch by 15-foot, black, nitrile or neoprene, suction/discharge fuel hose will be provided by the Contractor for fuel unloading. Hose shall be stored in a PVC pipe sleeve to prevent sun damage.

Q. A Hannay HGR-50-50 grounding reel or equivalent will also be provided. A typical grounding reel specification is provided in ***Attachment 11***.

R. Fuel access, payments, and inventory control will be provided by a QT Technologies M3000 Pro payment card reader. The M3000 Pro card reader shall be equipped with the QT Technologies Site Minder software. Specifications on the M3000 card reader are provided in ***Attachment 12***.

S. The QT Technologies M3000 Pro payment card reader is not explosion proof. Therefore, the M3000 Pro card reader must be mounted at least 3 feet from the dispenser or the transfer pump per Section 514 of the National Electrical Code. Also the head of the card reader must be mounted at least 18 inches above the floor of the equipment skid. Electrical classifications are shown on the ***Drawings***.

T. A large QT Technologies Multidisplay will be installed atop the dispenser. Information on a typical high visibility display is provided in ***Attachment 13***.

U. Two emergency shut-off switches shall be installed by the Contractor as shown on the ***Drawings***. One emergency shut-off shall be installed at the fence gate that surrounds the tank. The second emergency shut-off shall be installed on a bollard in front of the dispenser.

V. The fuel distribution equipment will be shop-assembled on the Skid to the extent possible, including piping and electrical connections, before transporting the Skid to the project site.

W. As a part of its start-up, Contractor shall place the self-serve fuel system in successful service and shall perform on-site testing, programming, etc., witnessed by HAS, that includes visual and mechanical checks of equipment components, including but not limited to:

1. Fully operate system to confirm proper operation of all components.

2. Certify compliance with individual manufacturer's test parameters.
3. Operate unit through each stage and verify proper operation of mechanical / electrical connections.
4. Test program, and adjust all controls and safety features.
5. Replace damaged and malfunctioning controls, equipment, etc.

X. The successful bidder must provide sixteen hours (16) of instruction to City Personnel on the use, operation, maintenance, and safety aspects of the unit as part of the bid at no additional cost to the City. Vendor must provide all necessary training equipment, materials, and incidentals necessary to accomplish the required training. Vendor must coordinate the scheduling of the training with the using department.

Y One set of operation, maintenance, parts, and wiring manuals must be furnished with final invoice.

33 56 43.13 ABOVEGROUND AVIATION FUEL-STORAGE TANKS

A. The Contractor shall furnish and install a 12,000-gallon UL-2085, Fireguard-rated, double-wall steel single compartment aboveground storage tank (AST). Specifications for a typical AST are provided in ***Attachment 14***.

B. The AST will be internally coated with Tnemec 61 epoxy coating (two coats) or an equivalent. Product information for Tnemec 61 is provided in ***Attachment 15***.

C. The AST will be equipped with steel saddles per the ***Drawings.*** The Skid required by **33 52 43 AVIATION FUEL DISTRIBUTION** shall be bolted to the north tank saddle once the AST is installed as per the ***Drawings***.

D. The AST shall be bolted to the foundation slab with 1-inch Grade 5 bolts set at least 4 inches into the foundation slab as shown on the ***Drawings***.

E. The AST will be equipped with the following:

a. Stainless steel OPW Floating suction system or equivalent.
b. 3”-dia aluminum down tube
c. 3” Morrison emergency valve or equivalent
d. 3” electric anti-siphon valve
e. Morrison floating suction indicator or equivalent
f. Morrison overfill gauge, alarm, and shutoff or equivalent
g. 3” Morrison vent and pipe or equivalent
h. Krueger interstitial leak gauge or equivalent
i. Internal tank ladder
j. Decals and placards.

F. All fuel piping shall be run in accordance with local requirement and state regulation governing the installation of fuel piping, providing all necessary fittings, sleeves and accessories.

G. Fuel piping shall be 3-inch or 1½-inch diameter Schedule 10, stainless steel pipe as noted on the ***Drawings***. Appropriate reducing bushings shall be used.

H. A pipe sealant that is compatible with the piping materials and the products being handled will be used on tapered thread joints. The Contractor will follow the manufacturer's preparation and application instructions, giving proper attention to temperatures and moisture conditions and limitations.

I. The vent piping shall be terminated with OPW pressure-vacuum vents or equal.

J. The Contractor is responsible for ensuring that the tank and fuel system skid are not dropped or damaged during delivery, unloading, or during installation activities. The Contractor must physically inspect the tank, equipment, and piping materials to ensure that no damage has occurred during shipping or handling activities. The Contractor is also responsible for signing the shipping papers and selecting the proper lift equipment rated to handle the load.

K. During the initial inspections of the tanks, equipment, and piping materials adherence to specifications must be confirmed and any detected damage, which could result in leakage or premature corrosion, must be reported to the HAS Engineer; and if applicable, repaired or replaced.

L. The Contractor will complete pressure testing of the tank immediately after delivery from factory and before installation with signed approval documentation and approval of the City of Houston Fire Marshall prior to being installed.

M. Both the inner and outer shells of the double-wall tanks must be tested prior to installation per manufacturer's installation instructions.

N. The Contractor is responsible for securing the tank and equipment skid providing hardware and anchor points of sufficient size and strength as noted on the ***Drawings***.

O. The HAS will be responsible for ballasting the AST with fuel for equipment testing purposes. The Contractor shall notify the HAS and HAS's Engineer at least one week before needing fuel.

P. The Contractor shall test and install all components of the AST system in accordance with the Manufacturers Installation Manuals and Operating Guidelines. The entire AST system must be installed in accordance with local code and authorities having jurisdiction.

Q. This Specification provides the Contractor with an outline of the extent of the work involved for the new fueling system installation; however, it is not intended to include each and every item required for the work. All items required for a complete and proper installation may not be indicated on the ***Drawings*** or in the specification. Anything omitted from these "Specifications" but shown on the ***Drawings*** or necessary for the completion and full functioning of the fueling system in accordance with Manufacturer's Installation Manuals and Operating Guidelines shall be considered a part of the overall "Specifications." The Contractor's price must include all items and accessories required for a complete system installation and operation as per manufacturer's requirements.

R. The entire installation of the fuel dispensing system shall equal, or exceed, all current local, state (TCEQ), and federal (EPA), regulations and guidelines. Documents shall be provided

by the Contractor to the HAS's Engineer noting that all testing of the new fueling system has been accomplished and approved, and noting any changes from the Specifications..

.

DRAWINGS

CONSTRUCTION DRAWINGS OF:

PROPOSED AVIATION FUELING SYSTEM INSTALLATION

ELLINGTON FIELD
HARRIS COUNTY, TEXAS

PREPARED FOR:

HOUSTON AIRPORT SYSTEM
ELLINGTON AIRPORT
510 ELLINGTON FIELD
HOUSTON, TEXAS 77034

DRAWING NUMBER	TITLE
1	COVER SHEET
2	SITE VICINITY MAP
3	SITE LAYOUT
4	SITE LAYOUT DETAIL
5	CONCRETE PAD DETAIL
6	FUEL STORAGE TANK DETAIL
7	EQUIPMENT SKID PIPING AND WIRING
8	EQUIPMENT SKID FRAME DETAIL
9	CANOPY LAYOUT
10	CANOPY DETAIL
11	FACILITY ONE LINE ELECTRICAL WIRING DIAGRAM AND LOAD ANALYSIS

10.28.13

Houston Airport System
Director or Approved Representative

Date

STATE OF TEXAS
PAUL MICHAEL SCHULTZ
68765
REGISTERED PROFESSIONAL ENGINEER

10/24/13

SKA CONSULTING, L.P.
1515 WITTE ROAD, SUITE 150
HOUSTON TEXAS 77080

Texas Registered Engineering Firm F-005009
Texas Registered Geoscience Firm 50011

PROPOSED AVIATION FUELING SYSTEM INSTALLATION
ELLINGTON FIELD
HARRIS COUNTY, TEXAS

COVER SHEET

5	FIFTH_REVISION	-	DESIGNED BY: PMS	DATE:	DRAWING NO.
4	FOURTH_REVISION	-	DRAWN BY: JCS	OCTOBER 2013	1
3	THIRD_REVISION	-	CHECKED BY: PMS		
2	SECOND_REVISION	-		PROJECT NO.	SHEET NO.
1	FIRST_REVISION	-	SCALE: AS SHOWN	5008-0017	1 OF 11
	REVISIONS	DATE			

FILE INFO: G:\2008\5008-0017\Dwg\D01.dwg sandersjc NO XREFS ATTACHED

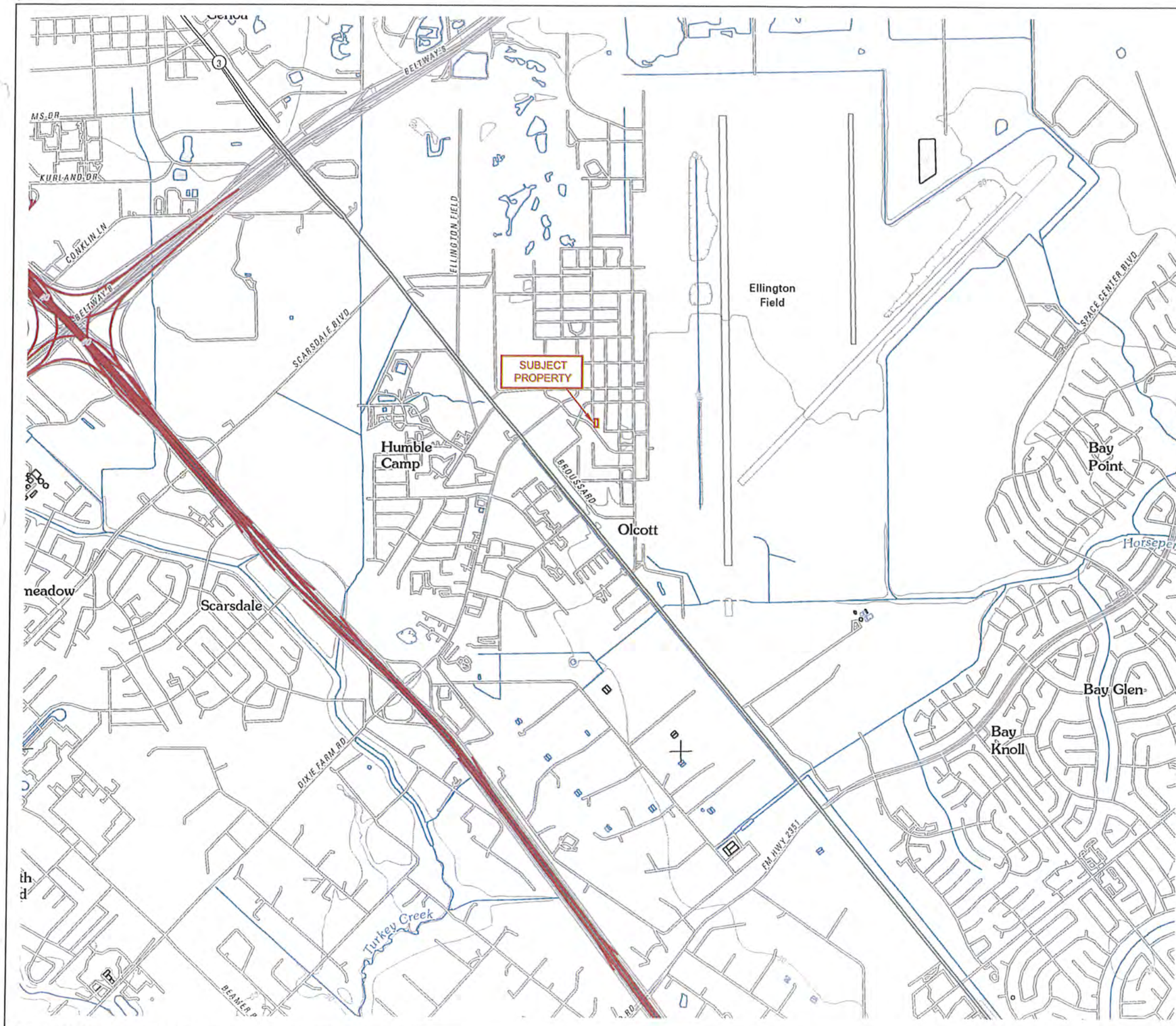

REFERENCE: USGS 7.5-MINUTE TOPOGRAPHIC QUADRANGLE
FRIENDSWOOD, TEXAS
2010

0 1000 2000 4000

APPROXIMATE SCALE: 1"=2000'

STATE OF TEXAS
PAUL MICHAEL SCHULTZ
68765
REGISTERED
PROFESSIONAL ENGINEER
1/12/13

10.28.13

Houston Airport System
Director or Approved Representative

Date

SKA CONSULTING, L.P.
1515 WITTE ROAD, SUITE 150
HOUSTON TEXAS 77080

Texas Registered Engineering Firm F-005009
Texas Registered Geoscience Firm 50011

PROPOSED AVIATION FUELING SYSTEM INSTALLATION
ELLINGTON FIELD
HARRIS COUNTY, TEXAS

SITE VICINITY AND TOPOGRAPHIC MAP

REVISIONS		DATE
5	FIFTH_REVISION	-
4	FOURTH_REVISION	-
3	THIRD_REVISION	-
2	SECOND_REVISION	-
1	FIRST_REVISION	-

DESIGNED BY: PMS
DRAWN BY: JCS
CHECKED BY: PMS
SCALE: AS SHOWN

DATE: OCTOBER 2013

PROJECT NO. 5008-0017

DRAWING NO. 2

SHEET NO. 2 OF 11

FILE INFO: G:\2008\5008-0017\Dwg\D01.dwg sandersjc NO XREFS ATTACHED

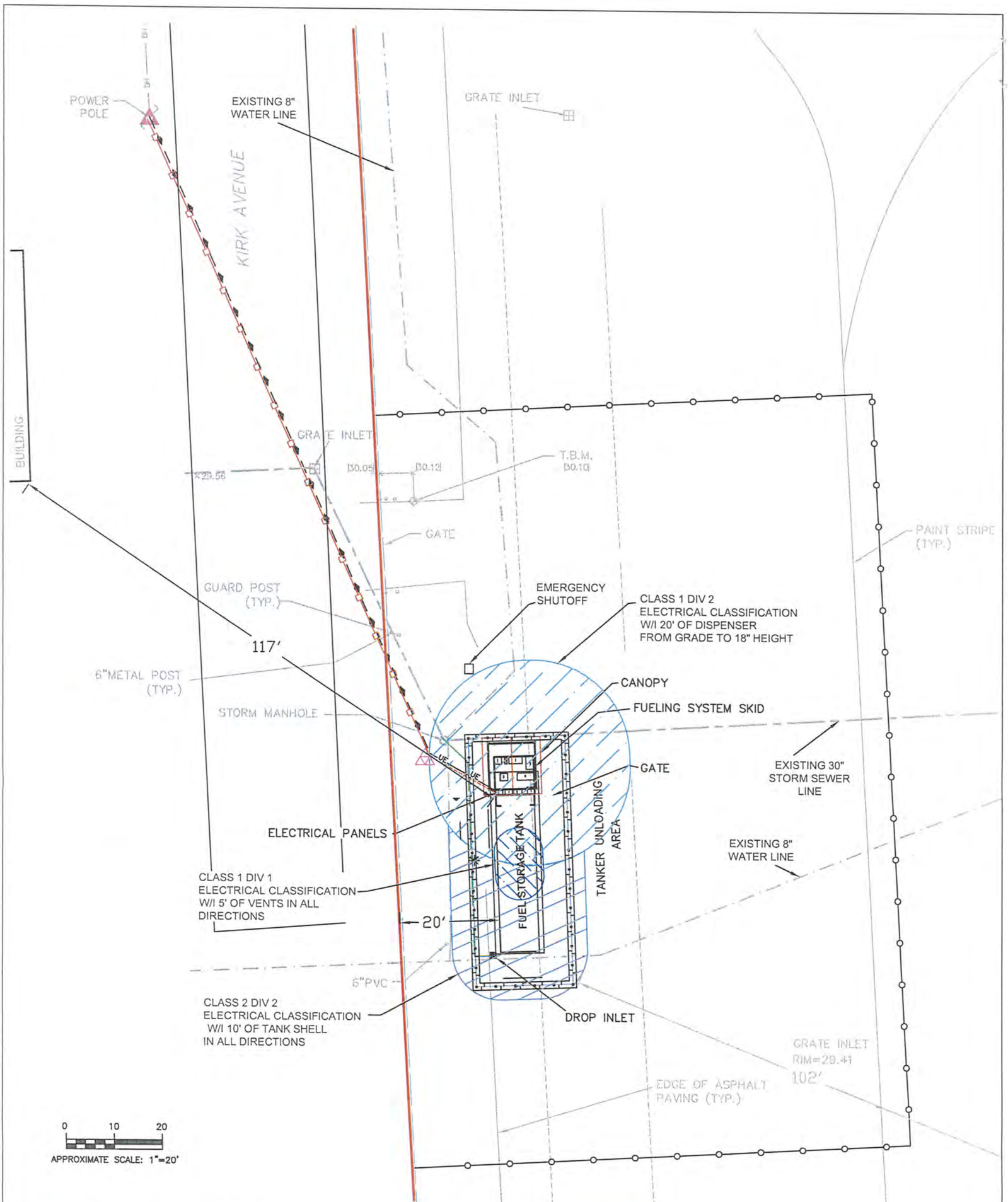

LEGEND

- SUBJECT PROPERTY BOUNDARY
- TEMPORARY FENCE
- PROPOSED CONCRETE PAD WITH SWALE
- PROPOSED BOLLARD
- PROPOSED CHAIN-LINK FENCE
- PROPOSED STORM SEWER LINE
- PROPOSED OVERHEAD ELECTRICAL POWER LINE
- PROPOSED OVERHEAD TELEPHONE LINE
- UE — PROPOSED UNDERGROUND ELECTRICAL POWER LINE
- PROPOSED UNDERGROUND TELEPHONE LINE
- PROPOSED POWER LINE WITH TRANSFORMERS (TO BE SET BY CENTERPOINT ENERGY)
- POLE-MOUNTED ELECTRICAL TRANSFORMER
- EXISTING CHAIN-LINK FENCE
- LIGHT STANDARD

05 DEC 2013
JEFF OKUBEN

Houston Airport System
Director or Approved Representative

Date

STATE OF TEXAS
PAUL MICHAEL SCHULTZ
68765
REGISTERED PROFESSIONAL ENGINEER
12/5/13

SKA CONSULTING, L.P.
1515 WITTE ROAD, SUITE 150
HOUSTON TEXAS 77080
Texas Registered Engineering Firm F-005009
Texas Registered Geoscience Firm 50011

PROPOSED AVIATION FUELING SYSTEM INSTALLATION
ELLINGTON FIELD
HARRIS COUNTY, TEXAS

SITE LAYOUT

REVISIONS		DATE
5	FIFTH_REVISION	-
4	FOURTH_REVISION	-
3	THIRD_REVISION	-
2	SECOND_REVISION	-
1	FIRST_REVISION	-

DESIGNED BY: PMS
DRAWN BY: JCS
CHECKED BY: PMS
SCALE: AS SHOWN
DATE: OCTOBER 2013
PROJECT NO. 5008-0017
DRAWING NO. 3
SHEET NO. 3 OF 11

FILE INFO: G:\2008\5008-0017\Dwg\D02.dwg sandersjc NO XREFS ATTACHED

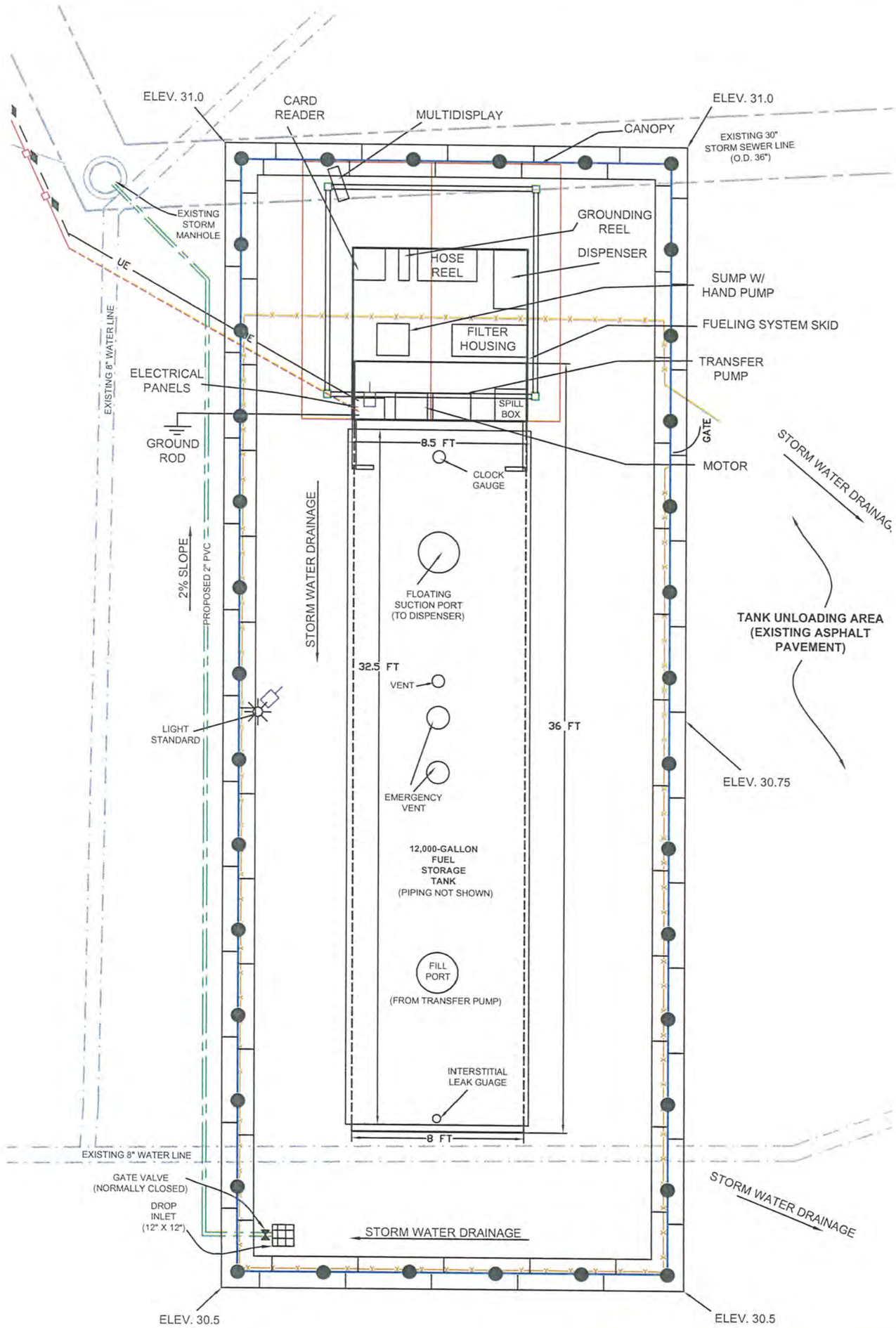

05 DEC 2013

Houston Airport System
Director or Approved Representative

Date

LEGEND

- PROPOSED CONCRETE PAD WITH SWALE
- PROPOSED BOLLARD
- PROPOSED CHAIN-LINK FENCE
- PROPOSED STORM SEWER LINE
- UE — PROPOSED UNDERGROUND ELECTRICAL POWER LINE
- PROPOSED UNDERGROUND TELEPHONE LINE
- SECURITY CAMERA

0 2.5 5
APPROXIMATE SCALE: 1"=5'

STATE OF TEXAS
PAUL MICHAEL SCHULTZ
68765
PROFESSIONAL ENGINEER
12/13/13

SKA CONSULTING, L.P.
1515 WITTE ROAD, SUITE 150
HOUSTON TEXAS 77080
Texas Registered Engineering Firm F-005009
Texas Registered Geoscience Firm 50011

PROPOSED AVIATION FUELING SYSTEM INSTALLATION
ELLINGTON FIELD
HARRIS COUNTY, TEXAS

SITE LAYOUT DETAIL

REVISIONS		DATE
5	FIFTH_REVISION	-
4	FOURTH_REVISION	-
3	THIRD_REVISION	-
2	SECOND_REVISION	-
1	FIRST_REVISION	-

DESIGNED BY: PMS
DRAWN BY: JCS
CHECKED BY: PMS
SCALE: AS SHOWN
DATE: OCTOBER 2013
PROJECT NO. 5008-0017
DRAWING NO. 4
SHEET NO. 4 OF 11

FILE INFO: G:\2008\5008-0017\Dwg\D02.dwg sandersjc NO XREFS ATTACHED

CONCRETE PAD DETAIL
SCALE: 1" = 10'

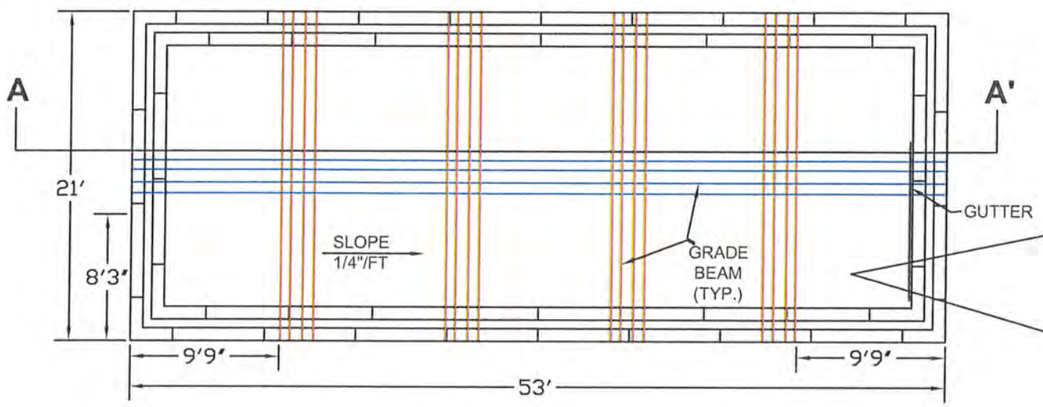

TYPICAL CONCRETE REINFORCEMENT
(#5 REBAR, DOUBLE-MAT, 18" ON CENTER)

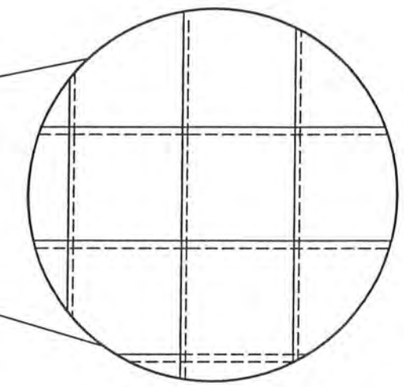

SECTION A-A'
SCALE: 1" = 5'

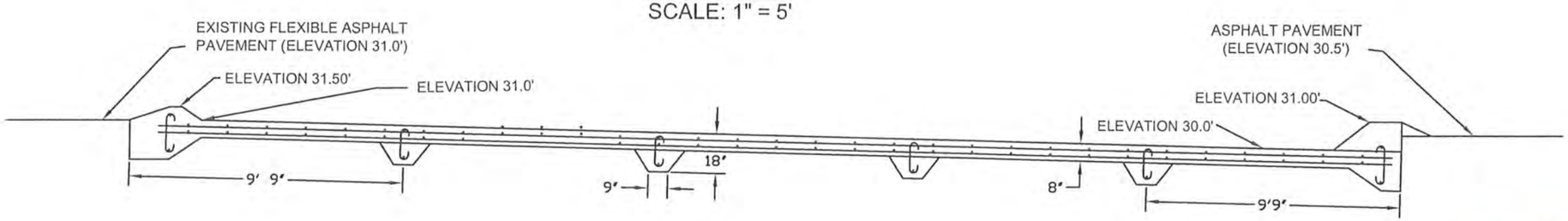

TYPICAL FOOTING DETAIL
(ALL #5 REBAR)

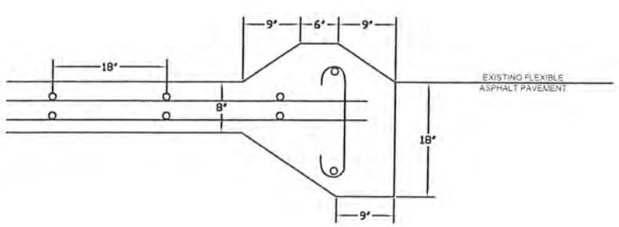

05 DEC 2013

Houston Airport System
Director or Approved Representative

Date

STATE OF TEXAS
PAUL MICHAEL SCHULTZ
68765
REGISTERED PROFESSIONAL ENGINEER
12/5/13

SKA CONSULTING, L.P.
1515 WITTE ROAD, SUITE 150
HOUSTON TEXAS 77080

Texas Registered Engineering Firm F-005009
Texas Registered Geoscience Firm 50011

PROPOSED AVIATION FUELING SYSTEM INSTALLATION
ELLINGTON FIELD
HARRIS COUNTY, TEXAS

CONCRETE PAD DETAIL

REVISIONS		DATE
5	FIFTH_REVISION	-
4	FOURTH_REVISION	-
3	THIRD_REVISION	-
2	SECOND_REVISION	-
1	FIRST_REVISION	-

DESIGNED BY: PMS
DRAWN BY: JCS
CHECKED BY: PMS
SCALE: AS SHOWN
DATE: OCTOBER 2013
PROJECT NO. 5008-0017
DRAWING NO. 5
SHEET NO. 5 OF 11

FILE INFO: G:\2008\5008-0017\DWG\D04.dwg sandersjc NO XREFS ATTACHED

FUEL STORAGE TANK

0 1.5 3

APPROXIMATE SCALE: 1"=3'

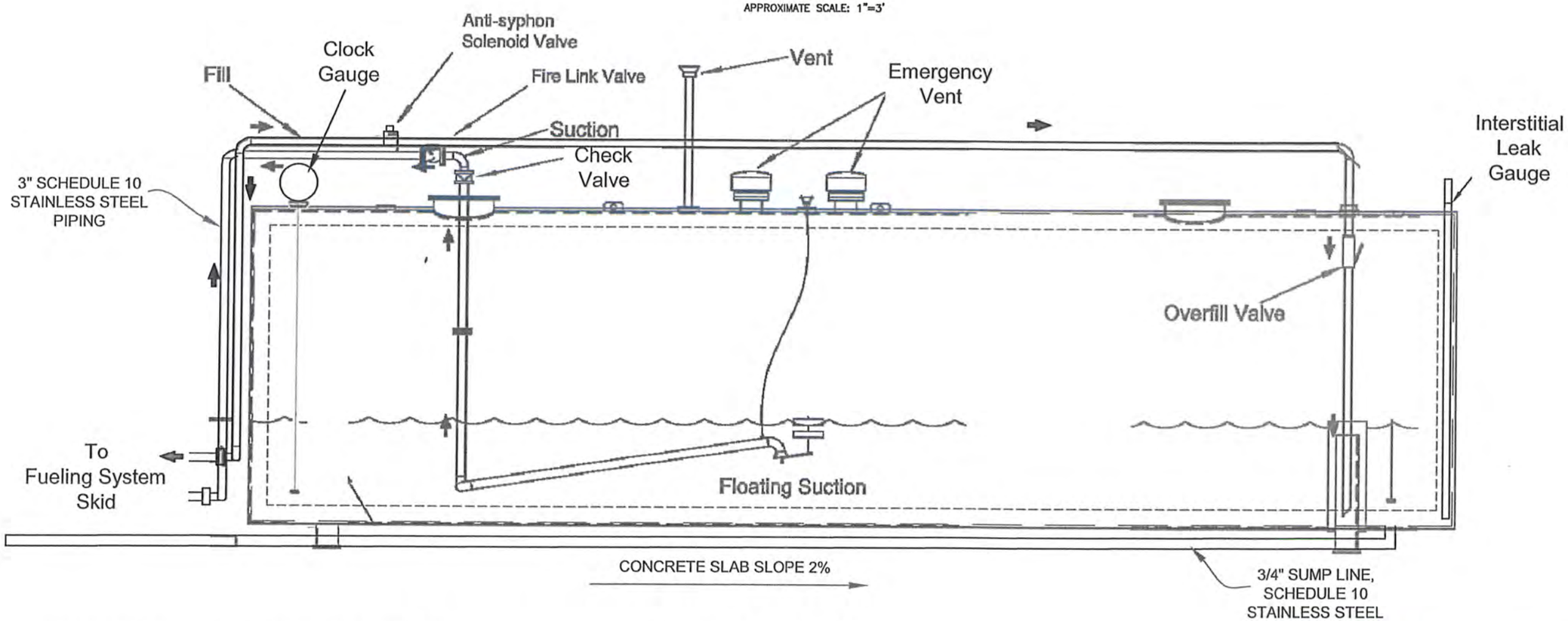

FLOATING SUCTION ASSEMBLY DETAIL

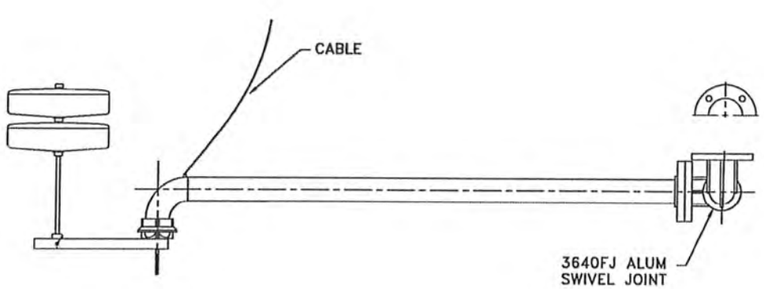

TANK SADDLE DETAIL

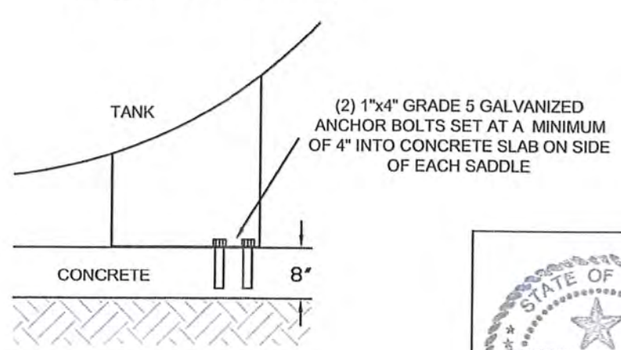

10.28.13

Houston Airport System
Director or Approved Representative

Date

STATE OF TEXAS
PAUL MICHAEL SCHULTZ
68765
REGISTERED PROFESSIONAL ENGINEER

10/24/13

SKA CONSULTING, L.P.
1515 WITTE ROAD, SUITE 150
HOUSTON TEXAS 77080

Texas Registered Engineering Firm F-005009
Texas Registered Geoscience Firm 50011

PROPOSED AVIATION FUELING SYSTEM INSTALLATION
ELLINGTON FIELD
HARRIS COUNTY, TEXAS

FUEL STORAGE TANK DETAIL

REVISIONS		DATE
5	FIFTH_REVISION	-
4	FOURTH_REVISION	-
3	THIRD_REVISION	-
2	SECOND_REVISION	-
1	FIRST_REVISION	-

DESIGNED BY: PMS
DRAWN BY: JCS
CHECKED BY: PMS
SCALE: AS SHOWN

DATE: OCTOBER 2013

PROJECT NO. 5008-0017

DRAWING NO. 6

SHEET NO. 6 OF 11

FILE INFO: G:\2008\20008-0023\DWG\D02.dwg sandersjc NO XREFS ATTACHED

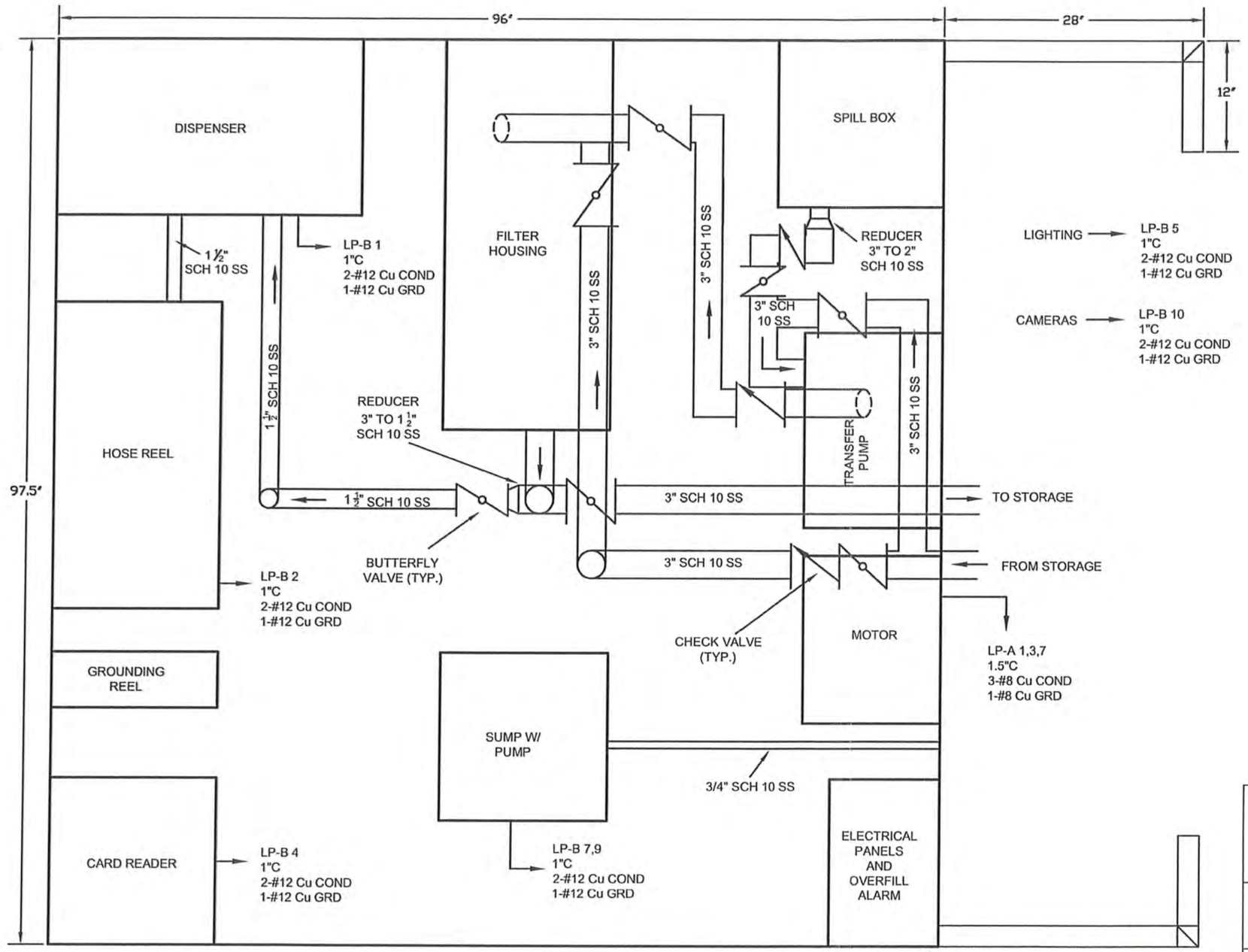

NOTES:
1. "LP-B 1" INDICATES LOAD PANEL AND CIRCUIT NUMBER.
2. ALL PIPING TO BE SCHEDULE 10 STAINLESS STEEL (SCH 10 SS).

0 1/2 1
APPROXIMATE SCALE: 1"=1'

STATE OF TEXAS
PAUL MICHAEL SCHULTZ
68765
REGISTERED PROFESSIONAL ENGINEER
10/24/13

10.28.13

Houston Airport System
Director or Approved Representative

Date

SKA CONSULTING, L.P.
1515 WITTE ROAD, SUITE 150
HOUSTON TEXAS 77080

Texas Registered Engineering Firm F-005009
Texas Registered Geoscience Firm 50011

PROPOSED AVIATION FUELING SYSTEM INSTALLATION
ELLINGTON FIELD
HARRIS COUNTY, TEXAS

EQUIPMENT SKID PIPING AND WIRING

REVISIONS		DATE
5	FIFTH_REVISION	-
4	FOURTH_REVISION	-
3	THIRD_REVISION	-
2	SECOND_REVISION	-
1	FIRST_REVISION	-

DESIGNED BY: PMS
DRAWN BY: JCS
CHECKED BY: PMS
SCALE: AS SHOWN
DATE: OCTOBER 2013
PROJECT NO. 5008-0017
DRAWING NO. 7
SHEET NO. 7 OF 11

FILE INFO: G:\2008\5008-0017\DWG\D08.dwg sandersjc NO XREFS ATTACHED

PLAN VIEW

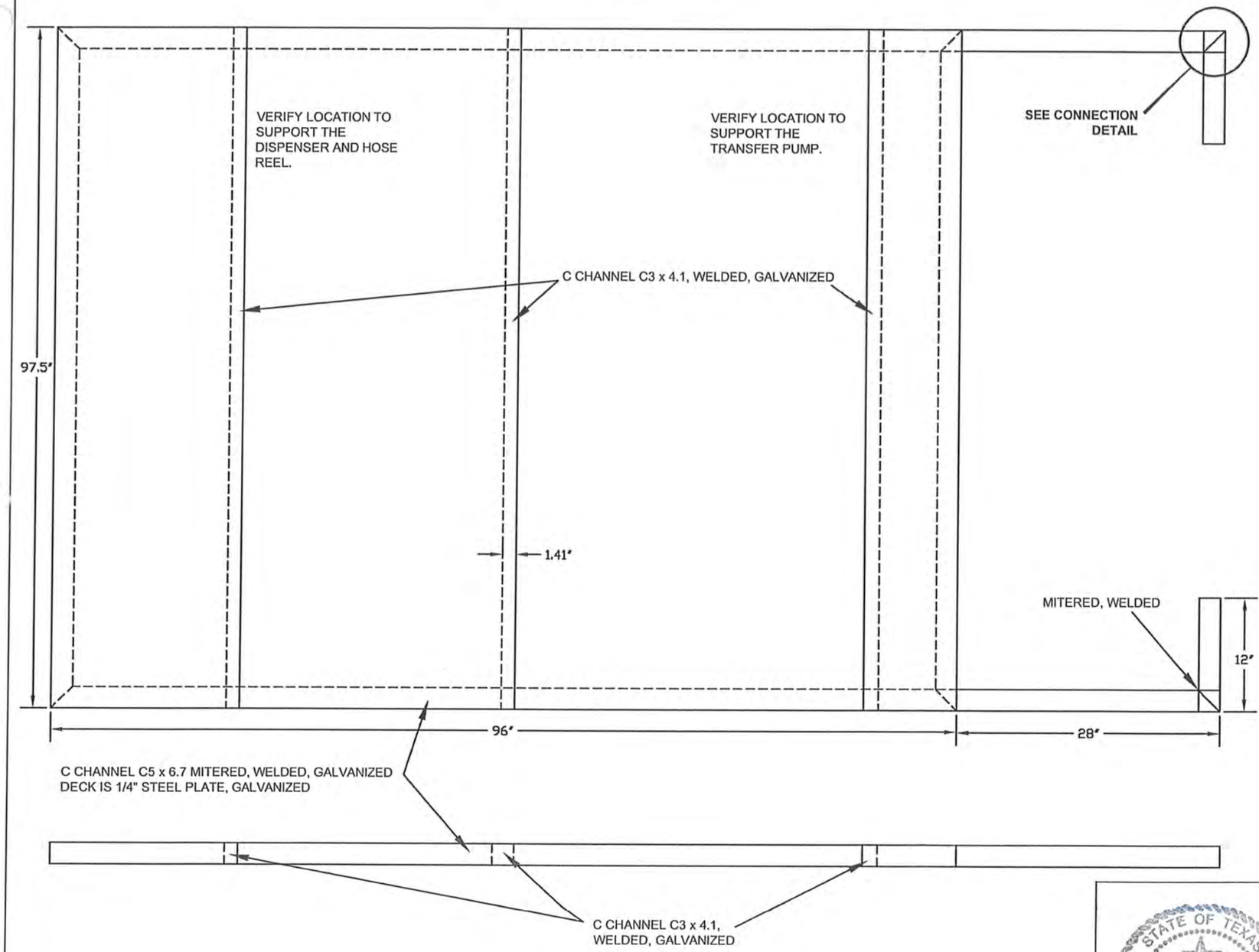

CONNECTION DETAIL

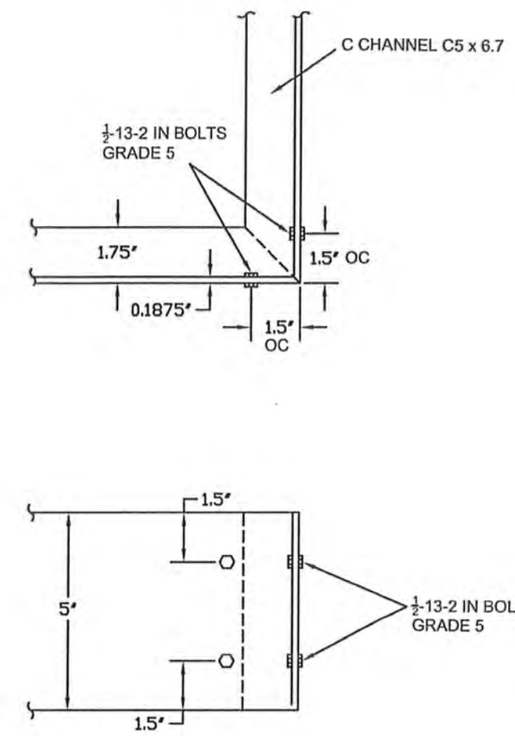

10.28.13

Houston Airport System
Director or Approved Representative

Date

STATE OF TEXAS
PAUL MICHAEL SCHULTZ
68765
REGISTERED PROFESSIONAL ENGINEER

10/24/13

SKA CONSULTING, L.P.
1515 WITTE ROAD, SUITE 150
HOUSTON TEXAS 77080

Texas Registered Engineering Firm F-005009
Texas Registered Geoscience Firm 50011

PROPOSED AVIATION FUELING SYSTEM INSTALLATION
ELLINGTON FIELD
HARRIS COUNTY, TEXAS

EQUIPMENT SKID FRAME DETAIL

REVISIONS		DATE
5	FIFTH_REVISION	-
4	FOURTH_REVISION	-
3	THIRD_REVISION	-
2	SECOND_REVISION	-
1	FIRST_REVISION	-

DESIGNED BY: PMS
DRAWN BY: JCS
CHECKED BY: PMS
SCALE: AS SHOWN

DATE: OCTOBER 2013
PROJECT NO. 5008-0017

DRAWING NO. 8
SHEET NO. 8 OF 11

FILE INFO: G:\2008\5008-0017\DWG\D08.dwg sandersjc NO XREFS ATTACHED

PLAN VIEW

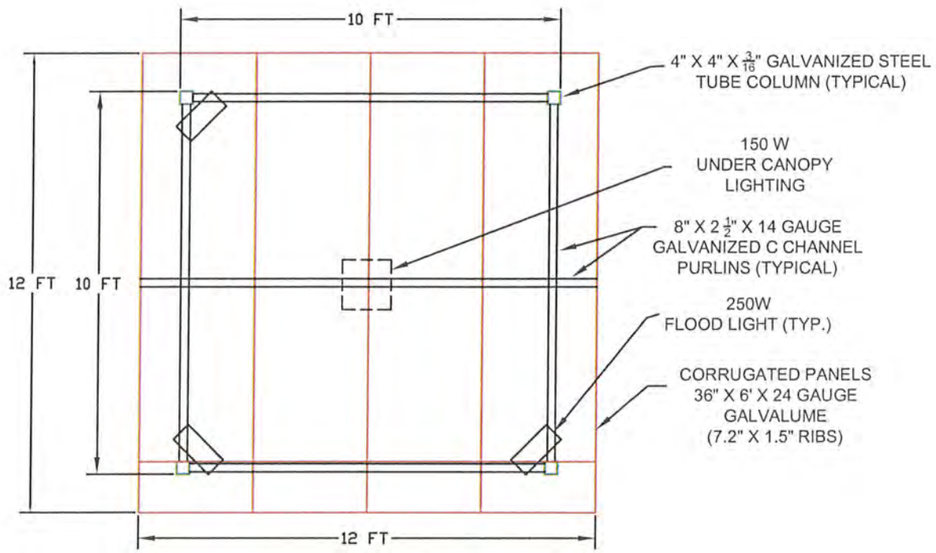

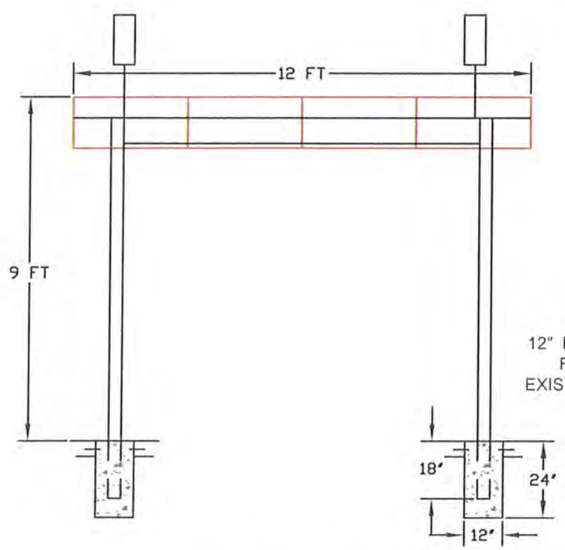

SIDE VIEW

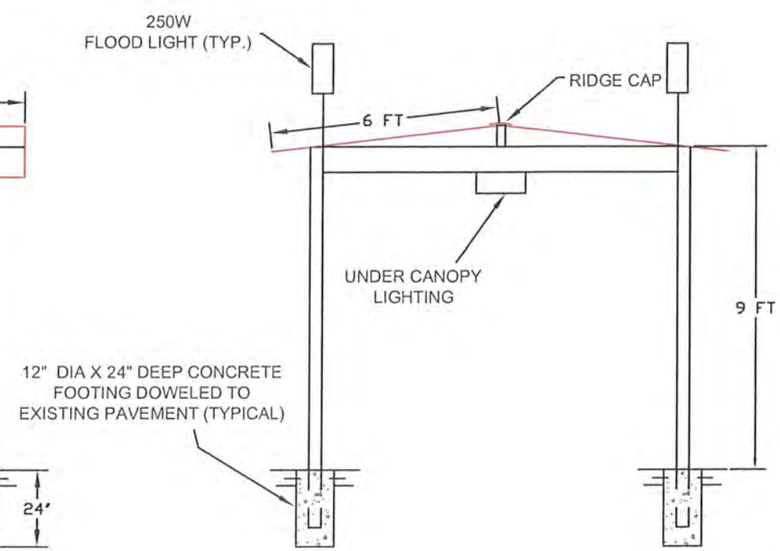

END VIEW

0 2 4

APPROXIMATE SCALE: 1"=4'

STATE OF TEXAS
PAUL MICHAEL SCHULTZ
68765
REGISTERED PROFESSIONAL ENGINEER
12/5/13

05 DEC 2013

Houston Airport System
Director or Approved Representative

Date

SKA CONSULTING, L.P.
1515 WITTE ROAD, SUITE 150
HOUSTON TEXAS 77080

Texas Registered Engineering Firm F-005009
Texas Registered Geoscience Firm 50011

PROPOSED AVIATION FUELING SYSTEM INSTALLATION
ELLINGTON FIELD
HARRIS COUNTY, TEXAS

CANOPY LAYOUT

5	FIFTH_REVISION	-	
4	FOURTH_REVISION	-	
3	THIRD_REVISION	-	
2	SECOND_REVISION	-	
1	FIRST_REVISION	-	
	REVISIONS	DATE	

DESIGNED BY: PMS
DRAWN BY: JCS
CHECKED BY: PMS
SCALE: AS SHOWN

DATE: OCTOBER 2013

PROJECT NO. 5008-0017

DRAWING NO. 9

SHEET NO. 9 OF 11

FILE INFO: G:\2008\5008-0017\DWG\D10.dwg sandersjc NO XREFS ATTACHED

ISOMETRIC ROOFING FASTENER DETAIL

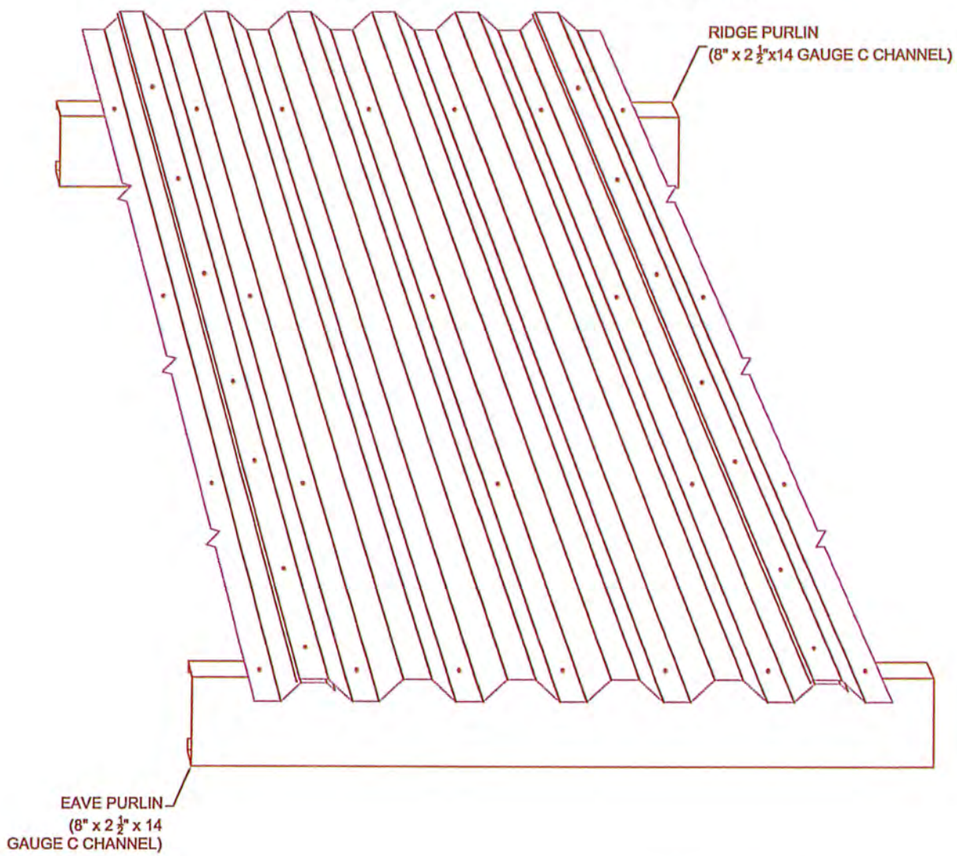

RIDGE DETAIL

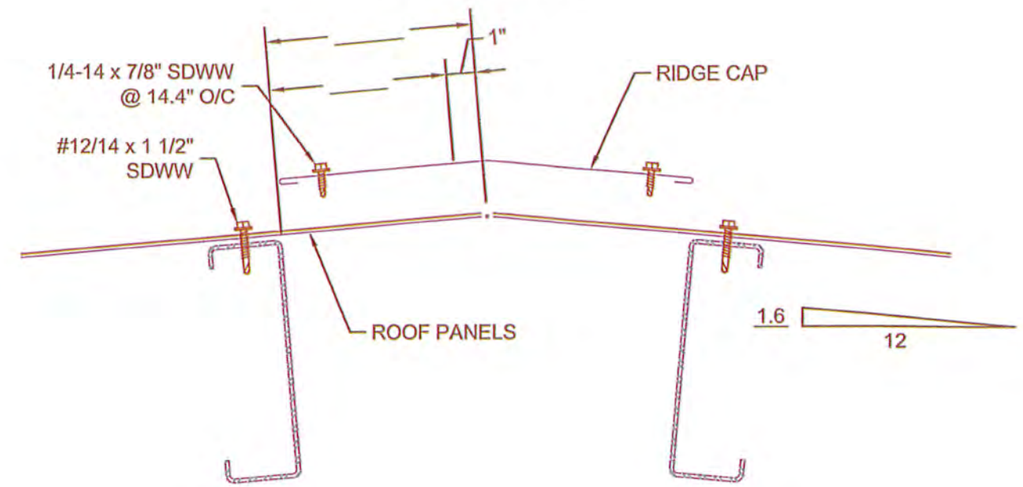

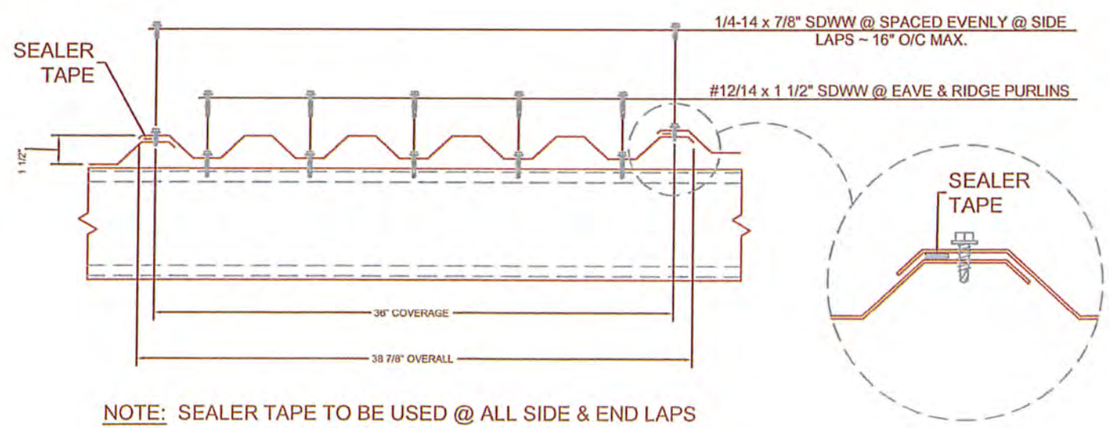

NOTE: SEALER TAPE TO BE USED @ ALL SIDE & END LAPS ON ROOF PITCHES 4:12 AND LESS.

10.28.13

Houston Airport System
Director or Approved Representative

Date

STATE OF TEXAS
PAUL MICHAEL SCHULTZ
68765
REGISTERED
PROFESSIONAL ENGINEER
10/24/13

SKA CONSULTING, L.P.
1515 WITTE ROAD, SUITE 150
HOUSTON TEXAS 77080

Texas Registered Engineering Firm F-005009
Texas Registered Geoscience Firm 50011

PROPOSED AVIATION FUELING SYSTEM INSTALLATION
ELLINGTON FIELD
HARRIS COUNTY, TEXAS

CANOPY DETAIL

REVISIONS		DATE
5	FIFTH_REVISION	-
4	FOURTH_REVISION	-
3	THIRD_REVISION	-
2	SECOND_REVISION	-
1	FIRST_REVISION	-

DESIGNED BY: PMS
DRAWN BY: JCS
CHECKED BY: PMS
SCALE: AS SHOWN
DATE: OCTOBER 2013
PROJECT NO. 5008-0017
DRAWING NO. 10
SHEET NO. 10 OF 11

FILE INFO: G:\2008\5008-0017\DWG\D11.dwg sandersjc NO XREFS ATTACHED

PANEL LP-A

Service: 120/240V, 60 Hz, 65K AIC GE Panelboard NLTQ, 200A, 24 circuits, 3Φ, 4 wire, NEMA 8 Enclosure

Load Description	Circuit No.	Breaker Pole	Breaker Amps	Breaker Pole	Breaker Amps	Circuit No.	Load Description
Transfer Pump (10 Hp)	1	3	80	3		2	Spare
	3					4	
	5					6	
Spare	7	3		3		8	Spare
	9					10	
	11					12	
Spare	13	3		3		14	Spare
	15					16	
	17					18	
Spare	19	3		1	80	20	Main to LP-B
	21					22	
	23			1	80	24	Main to LP-B

ELECTRICAL LOAD ANALYSIS FOR PANEL LP-A

Item Description	Quantity	Voltage	Phase Current A (amps)	Phase Current B (Hi-Leg) (amps)	Phase Current C (amps)	Breaker Size (amps)	Wire Size	Conduit
Transfer Pump (10 Hp)	1	240	28.0	28.0	28.0	80 (three-pole)	3-#6 Cu awg. 3-#6 Cu awg grd	1.5"
Main to LP-B (Panel rating)	2	240	100		100	100 (single-pole)	3-#2 Cu awg	2"
Sum of Amp Loads			128.0	28.0	128.0			
25% of Largest Amp Load			25	7.0	25			
Total Amp Load			153.0	35.0	153.0			
Total KVA of Transfer Pump			11.6	11.6	11.6			
Panel Rating (Amps)			200	200	200			
Panel Available Ampacity			47.0	165.0	47.0			
Service Conductor Rating (#3/0 Cu AWG THHN)			225	225	225			
Service Conductor Available Ampacity			72.0	190.0	72.0			

PANEL LP-B

Service: 120/208V, 60 Hz, 65K AIC GE Panelboard NLTQ, 100A, 24 circuits, 1Φ, 3 wire, NEMA 8 Enclosure

Load Description (A Phase)	Circuit No.	Breaker Pole	Breaker Amps	Breaker Pole	Breaker Amps	Circuit No.	Load Description (C Phase)
Dispenser Pump	1	1	20	1	20	2	Hose Reel Rewind
Solenoid Valve	3	1	20	1	20	4	Card Reader
Lighting	5	1	20	1	20	6	Lighting
Sump Pump	7	2	20	1	20	8	Display
	9					10	Cameras
Spare	11					12	Spare
Spare	13					14	Spare
Spare	15					16	Spare
Spare	17					18	Spare
Spare	19					20	Spare
Spare	21					22	Spare
Spare	23					24	Spare

ELECTRICAL LOAD ANALYSIS FOR PANEL LP-B

Item Description	Quantity	Voltage	Phase Current A (amps)	Phase Current C (amps)	Phase Current Neutral (amps)	Breaker Size (amps)	Wire Size	Conduit
Dispenser Pump Motor (1 Hp)	1	120	9.3		9.3	20 (single pole)	2-#12 awg. 1-#12 awg grd	1"
Hose Reel Rewind Motor (1/2 Hp)	1	120		4.7	4.7	20 (single pole)	2-#12 awg. 1-#12 awg grd	1"
Solenoid Valve	1	120	1.0		1.0	20 (single pole)	2-#12 awg. 1-#12 awg grd	1"
Card Reader	1	120		2.5	2.5	20 (single pole)	2-#12 awg. 1-#12 awg grd	1"
Display	1	120		2.5	2.5	20 (single pole)	2-#12 awg. 1-#12 awg grd	1"
Sump Pump	1	230	3.3	3.3		20 (single pole)	2-#12 awg. 1-#12 awg grd	1"
Surveillance Cameras	4	120		4.0	4.0	20 (single pole)	2-#12 awg. 1-#12 awg grd	1"
Lighting (150W each)	1	120	1.25		1.25	20 (single pole)	2-#12 awg. 1-#12 awg grd	1"
Lighting (250W each)	3	120	2.1	4.2	6.3	20 (single pole)	2-#12 awg. 1-#12 awg grd	1"
Sum of Amp Loads			17.0	21.1	31.6			
25% of Largest Amp Load			2.3	1.2	2.3			
Total Amp Load			19.3	22.3	33.9			
Max KVA of all loads			2.3	2.7	4.0			
Panel Rating (Amps)			100	100	100			
Panel Available Ampacity			80.7	77.7	66.1			
Service Conductor Rating (#2 Cu AWG THHN)			130	130	130			
Service Conductor Available Ampacity			110.7	107.7	96.1			

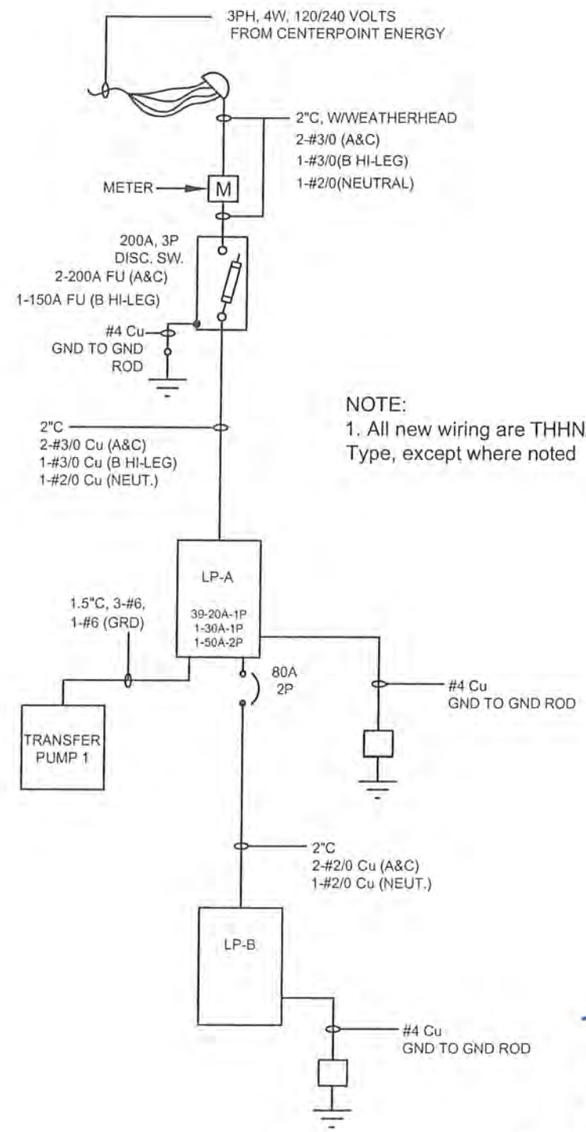

NOTE:
1. All new wiring are THHN/T Type, except where noted

SHORT CIRCUIT CURRENTS

1. ASSUME 75 KVA XFMR
   NEGLECT CABLE IMPEDANCE
2. MAX XFMR POWER LET THROUGH
   = KVA/(Z/100)
   = 75/(1.5/100)
   = 5000 KVA
3. TRANSFER PUMP SHORT CIRCUIT POWER
   = KVA/0.2 (MOTOR <50 HP)
   = 10/0.2 KVA = HP
   = 50 KVA
4. PANEL LP-B SHORT CIRCUIT POWER
   = $(KVA_{ALL\ LOADS})/0.2$
   = 4.0/0.2
   = 20 KVA
5. FAULT CURRENT AT PANEL LP-A
   = KVA/(V/1000)
   = (5000+50+20)/(240/1000)
   = 21,125 A
6. FAULT CURRENT AT PANEL LP-B
   = KVA/(V/1000)
   = 20/(208/1000)
   = 96 A

LIGHTING SCHEDULE

LIGHT	VOLTAGE	No.	WATTAGE
FLOOD	120	3	250
UNDER CANOPY	120	1	150

08 DEC 2013

Houston Airport System
Director or Approved Representative

Date

STATE OF TEXAS
PAUL MICHAEL SCHULTZ
68765
REGISTERED PROFESSIONAL ENGINEER
12/5/13

SKA CONSULTING, L.P.
10260 WESTHEIMER, SUITE 605
HOUSTON TEXAS 77042

Texas Registered Engineering Firm F-005009
Texas Registered Geoscience Firm 50011

PROPOSED AVIATION FUELING SYSTEM INSTALLATION
ELLINGTON FIELD
HARRIS COUNTY, TEXAS

FACILITY ONE LINE ELECTRICAL DIAGRAM AND LOAD ANALYSIS

REVISIONS		DATE
5	FIFTH_REVISION	-
4	FOURTH_REVISION	-
3	THIRD_REVISION	-
2	SECOND_REVISION	-
1	FIRST_REVISION	-

DESIGNED BY: PMS
DRAWN BY: JCS
CHECKED BY: PMS
SCALE: AS SHOWN
DATE: OCTOBER 2013
PROJECT NO. 5008-0017
DRAWING NO. 11
SHEET NO. 11 OF 11

FILE INFO: G:\2008\5008-0017\Dwg\D11.dwg sandersjc NO XREFS ATTACHED

ATTACHMENT 1

HUBBELL, TYPICAL LIGHT FIXTURES

LARAMIE SERIES LFM

Cat. #		Approvals
Job	Type	

Outdoor Lighting

APPLICATIONS

- Signs, facades, area illumination and landscape accent.

SPECIFICATIONS

- Die cast aluminum housing and door. Twin screw closure provides positive seal.
- Tempered, impact-resistant clear glass lens.
- Steel yoke (LFM-Y), or cast aluminum knuckle (LFM-K) mounting.
- Wide, uniform beam from one piece hydroformed reflector with coverage four times set back distance.
- Pulse start metal halide, HPS, electronic metal halide and 120watt compact fluorescent systems available.
- Five standard finishes: Bronze, Black, Gray, White and Platinum.
- Lamp inlcuded with fixture.
- EPA – Effective Projected Area is 1.9 sq. ft.

LISTINGS

- Listed to UL 1598 for use in wet locations.
- U.S. Patent No. D566,318, D574,102 and 6,461,026.

LAMP INCLUDED

LFM-K

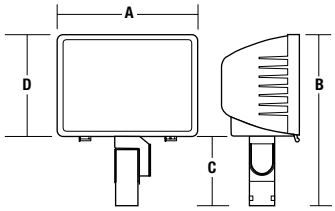

LFM-Y

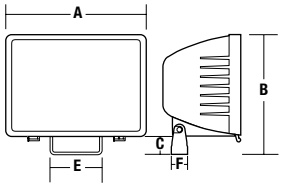

	A	B	C	D	E	F
LFM-K	17 3/8"	21 1/16"	9 1/8"	12 1/2"	–	–
	441 mm	535 mm	231 mm	317 mm	–	–
LFM-Y	17 3/8"	14 11/16"	3"	12 1/2"	6"	2"
	441 mm	373 mm	76 mm	317 mm	152 mm	51 mm

ORDERING INFORMATION

ORDERING EXAMPLE: LFM-Y-400P8-BZ-PC120

LFM - [ ] - [ ] [ ] - [ ] - [ ]

SERIES

LFM Laramie Flood Medium

MOUNT

Y Yoke Mount

K Knuckle Mount for 2 3/8" tenon

WATTAGE/SOURCE

PULSE START METAL HALIDE

150P 150w

250P 250w

320P 320w

400P 400w

HIGH PRESSURE SODIUM

150S 150w

250S 250w

400S 400w

ELECTRONIC MH

150E 150w

FLUORESCENT

120F 120w (4100K)

VOLTAGE

V 5 Tap (250, 400w PS or HPS only)

8 Quad - Tap® (120, 208, 240, 277V) (standard on Electronic MH/ Fluorescent)

5 480V

E 220/240V, 50Hz

X No ballast

6[1] Tri-Tap® 120/277/347

FINISH

BZ Bronze

BL Black

GR Gray

WH White

PS Platinum

OPTIONS

P(X) Button Photocontrol (replace X with voltage: 1-120, 2-208, 3-240, 4-277)

F(X) Fusing (replace X with voltage: 1-120, 2-208, 3-240, 4-277, 5-480, 6-347)

QST Time delay quartz (stand by system less DC bayonet base lamp)

EM DC Bayonet socket only (for remote power by others)

1 Not available on 150E or 120F wattage source

Replacement lens is 264-0358-9903

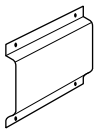

LFM-SPC

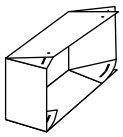

LFM-AGS

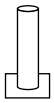

LFM-GP

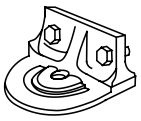

4090

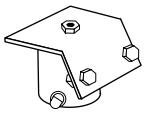

4024C

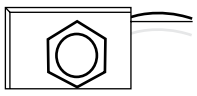

PBT-1
PBT-234

ACCESSORIES - Order Separately

Catalog Number	Description
LFM-SPC	Polycarbonate shield
LFM-AGS	Glare shield - black
LFM-GP	Ground post - black
PBT-1	Button photocontrol 120V
PBT-234	Button photocontrol 208, 240, 277V
4024C	2 3/8" O.D. slipfitter for yoke units - bronze
TWK-11	Wall bracket with 2 3/8" O.D. tenon - bronze
4040	Steel angle bracket for LFM-Y, bronze
4041	Steel angle bracket with 2 3/8" O.D. tenon for LFM-K, bronze
4090	Heavy-duty cast iron crossarm fitting for horizontal trunnion, bronze Lektrocote®

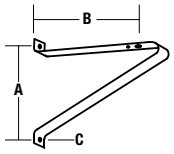

4040

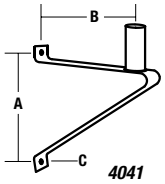

4041

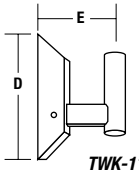

TWK-11

A	B	C	D	E
8 1/4"	9 1/2"	1 1/16"dia	11"	8"
210 mm	241 mm	17.4 mm	279 mm	203 mm

Hubbell Outdoor Lighting • 701 Millennium Boulevard • Greenville, SC 29607 • Phone: 864-678-1000

Due to our continued efforts to improve our products, product specifications are subject to change without notice.

© 2012 HUBBELL OUTDOOR LIGHTING, All Rights Reserved • For more information visit our website: **www.hubbelloutdoor.com** • Printed in USA

UCL SERIES
CANOPY

Cat. #		Approvals
Job	Type	

Outdoor Lighting

- Modular design for flexibility and upgrade to meet changing lighting codes
- Die-cast construction for long-term durability and cooling; double canopy gaskets seal above and below for “no leak” installation
- Tool-free, positive optical latching for reliable sealing and easy on-ground relamping with standard changers
- Adjustable reflectors standard with 8 lamp shielding combinations, and easy optical assembly replacement from below
- Optical assemblies provide below canopy installation capability and tool-free hinged ballast cover
- Mogul base ED-28 lamp included with pulse-rated porcelain sockets
- CWA type HPF ballast, starting rated at -20°
- TGIC thermoset polyester powder paint (white is standard)
- IDA approved UC03 full cut-off optic
- U.S. Patent No. D444,903, 6,394,628, 7,252,415, 6,332,695, 6,525,890 and 6,454,444

Note: Not suitable for double deck canopies or enclosed ceiling applications

ORDERING INFORMATION

UCL - [ ] - [ ] - P - [ ] - [ ]

SERIES
- **UCL** Under Canopy Luminaire

OPTICS
- Digit left blank when ordering UC01 non-cut-off high verticals
- **2** UC02 optics - sag glass - cut-off
- **3** UC03 optics - flat glass - full cut-off

WATTAGE
- **100** 100w (ED-28)
- **150** 150w (ED-28)
- **250** 250w (ED-28)
- **320** 320w (ED-28)
- **350** 350w (ED-28)
- **400** 400w (ED-28)

SOURCE
- **P** Pulse Start Metal Halide

VOLTAGE
- **5** 480V
- **6**[1] 120/277/347V
- **8**[1] 120/208/240/277V
- **E**[1] 220/240V, 50Hz

OPTIONS
- **BZ** Bronze powder paint
- **B** Black powder paint

1 Factory wired for highest voltage unless specified
Note: Due to our ongoing improvement program, specifications and design are subject to change without notice
Note: For 50Hz systems, please consult factory

ACCESSORIES - Order Separately

Catalog Number	Description
UCK-1	Two support rails for weak canopies or below installations in roofed, double deck canopies
UCL-HS	Internal house-side shield for UC01 optic: order 1 each for 190° or 2 each for 290° or 360° shielding
UCL-LC	ED-28 lamp changer with three 5-foot pole sections
UC01	White replacement optical assembly (add BZ for bronze or B for black) - Non-cut-off
UC02	White replacement optical assembly (add BZ for bronze or B for black) - Cut-off
UC03	White replacement optical assembly (add BZ for bronze or B for black) - Full-cut-off
UCL-template	Order one free installation template per standard canopy job (Non-UCT retrofit installations)

UC01

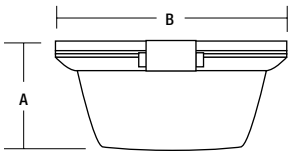

UC02

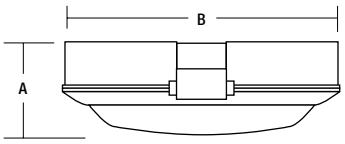

	A	B
UC01	6 1/8” 156 mm	14 1/4” 362 mm
UC02	6” 152 mm	17 1/2” 445 mm
UC03	6” 152 mm	17 1/2” 445 mm

UC03

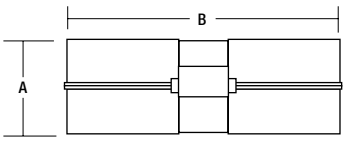

UCB Ballast Unit

Ballast Unit Specs
14” x 7.5” x 5”

ORDERING INFORMATION

ORDERING EXAMPLE

UCL	-	2	-	320	-	P	-	8	-	DB
Series		Optics		Source/ Wattage		Ballast Type		Voltage		Options

SERIES - UNDER CANOPY

UCL	Deep Drop Lens

OPTICS

	Digit left blank when ordering UCO1
2	UCO2 Optics - sag glass
3	UCO3 Optics - flat glass

SOURCE/WATTAGE

100	100w (ED-28)
150	150w (ED-28)
175	175w (ED-28)
250	250w (ED-28)
320	320w (ED-28)
350	350w (ED-28)
400	400w (ED-28)

BALLAST TYPE

P	Pulse Start Metal Halide

VOLTAGE

5	480V
6[1]	Tri-Tap 120/277/347V
8[1]	Quad-Tap® 120/208/240/277V
E[1]	220/240V 50Hz

OPTIONS

F1	Fuse 120V
F2	Fuse 208V
F3	Fuse 240V
F4	Fuse 277V
F5	Fuse 480V
F6	Fuse 347V
BL	Black optical assembly
DB	Bronze optical assembly
R	Two 15/34" rails for canopy support

1 Factory wired for highest voltage unless specified.
NOTE: Due to our ongoing improvment program, specifications and design are subject to change without notice.

PHOTOMETRIC REPORTS

Catalog Number	Report #
UCL-400PX	**HP08479.IES**
UCL-320PX	**HP08246.IES**

Due to our continued efforts to improve our products, product specifications are subject to change without notice.

Hubbell Outdoor Lighting • 701 Millennium Boulevard • Greenville, SC 29607 • PHONE: 864-678-1000
For more information visit our web site: **www.hubbelloutdoor.com**

Outdoor Lighting

Copyright © 2011 HUBBELL LIGHTING All Rights Reserved UCL-SPEC8/11 Printed in USA

ATTACHMENT 2

ELECTRONIC SURVEILLANCE EQUIPMENT LIST

Electronic Surveillance Equipment List

Manufacture	Part number	Description	Quantity
Aruba	Aruba AP-175P	AP-175P Outdoor Access Point, 802.11n 2x2 dual radio 320mW; POE powered 5.5-5.9GHz, 14.0dBi, 60&#65533;, &#65533;45&#65533; polarized 2 Element MIMO High-Gain Directional Panel Antenna, 2x N-Type Female connectors,	2
Aruba		Aruba Outdoor Antenna Lightning Arrestor - N-Type Connector 2-6 Ghz	4
Aruba		Kit with weatherproof connector assembly to attach cable to (metal) AC power interface on outdoor AP models	2
Aruba		7D antenna cable with 2 N type Male connectors, 4 meters	4
Aruba		Access Point License (1 Access Point License)	2
Aruba		Security Software Bundle (1 AP License)	2
Aruba Support			
Aruba Support		SUPPORT FOR LIC-1-AP (1 YEAR)	2
Aruba Support		SUPPORT FOR LIC-SEC-1 (1 YEAR)	2
Aruba Support		NEXT-DAY SUPPORT FOR AP-175P (1 YEAR)	2
Aruba Support		NBD SUPPORT FOR ANT-2x2-5614U (1 YEAR)	2
Aruba Support		ARUBACARE NEXT-DAY SUPPORT FOR AP-LAR-1 (1 YEAR)	4
Axis	Q6035E	(HD IP PTZ Ext) 1080p PTZ High Definition, Day/Night High Definition IP Camera Lens: 20x optical zoom,(4.7 to 94 mm). Housing: Vandal Resistant with Tinted Acrylic Dome	1
Axis	5017-611	AXIS T91A61 Wall Bracket	1
Axis	5502-431	AXIS T94A01D Pendant Kit	1
Axis	5017-671	AXIS T91A67 Pole Bracket	2
Axis	5503-961	Smoked Dome D for AXIS Q60-E/-C Free of charge when ordered together with the camera	2
CISCO	IE-3000-8TC	Cisco IE 3000 Switch, 8 10/100 + 2 T/SFP	1
CISCO	SIESLBT-12255SE	Cisco IE 3000 LAN BASE W/O CRYPTO WITH WEB BASED DEV MGR	1
CISCO	PWR-IE3000-AC=	IE 3000 Power transformer	1
Circa	1890ECT1-25	25 pair Lightning Protector Block	1
Commscope Systimax		Cat 6 outside plant cable 1500' plus RJ 45 biscuit jacks, RJ45 connectors, etc	1500'
Fire rated Plywood		Fire rated plywood 3/4" 8'x4' A/C with 2 coats of fire-resistant light-colored paint.	1
Honeywell	HD4MDIH	(HD IP Fixed Ext) Day/Night High Definition IP Day/Night Camera Lens: 3 to 9 mm F1.4 varifocal lens Housing: Vandal Resistant with Tinted Acrylic Dome	1
Nema	HW-N3R242410CH	Non-Metallic Nema 3R Enclosures, Hinged with twist latches and Hasp.	1
Panduit	GB2B0306TPI-1	Ground bus bar Tin-plated copper, minimum bus bar dimensions are .25” thick x 2” wide x 12” long, minimum of 6 AWG, stranded, insulated (green) copper conductor should be used for communications since this accommodates different code requirements and allows for future changes.	1

ATTACHMENT 3

OPERATION AND MAINTENANCE CHECKLIST

Fuel - Record of Receipt from Transport Truck

Fuel Delivered By:	**Supervisor:**					
Fuel Received By:						
Date						
Fuel Farm						
1. Tank ID#						
2. Gauge and Record Tank Volume						
3. White Bucket -Tank Sump						
4. White Bucket - Filter Sump						
Shipping Documents						
5. Document Number (BOL)						
6. Correct Destination						
7. Correct Grade of Fuel (Record Grade)						
8. Correct Volume of Fuel (Record Volume)						
9. Reported: API Gravity Corrected to 60 ° F						
Transport Truck						
10. Prior Cargo						
11. Compartment Seals						
12. White Bucket Test (See Note 1)						
13. Measured: (See Note 2) API Gravity Corrected to 60 ° F						
14. Measured Fuel Temperature (° F)						
Prepare for Receipt						
15. Set Valves for Receiving						
16. Connect Bonding Cable						
17. Check Condition of Load Hose						
18. Verify Connection to Correct Tank						
During Fuel Transfer						
19. Filter Differential Pressure						
20. System Leaks						
After Receipt						
21. Disconnect and Stow Hose						
22. Disconnect Bonding Cable						
23. Gage and Record Tank Volume						
24. White Bucket Test – Tank Sump						
25. White Bucket Test – Filter Sumps						
S – Satisfactory **C** – Comment **X** - Unsatisfactory						
Comments:						

Note 1: Unsatisfactory should the fuel fail to clear after draining approximately 5 separate one gallon samples from a single compartment.
Note 2: Reject shipment if the measured API gravity, corrected to 60 °F, is not within ± 1.0 °API of that shown on the bill of lading.
Note 3: Verify addition of FSII at the correct rate, within 1.0 to 1.5-gallons FSII per 1000-gallons of Jet A loaded.

Daily Storage Tank/Filter Vessel Sump Checks and Differential Pressure Checks

Facility:		Station:										Supervisor:											Month:						Year:			
Daily Inspections	**Vessel #**	1	2	3	4	5	6	7	8	9	10	11	12	13	14	15	16	17	18	19	20	21	22	23	24	25	26	27	28	29	30	31
Tank Sumps																																
(See sump ratings below)																																
Filter Vessel Sumps																																
(See sump ratings below)																																
Filter Differential Pressures																																
Signature of person performing tasks or person accepting responsibility that tasks were performed																																

Visual Appearance Ratings

Solids	**1 = Clear**	*No visible particles, silt, sediment, dye, rust, solids or unusual color*
	2 = Slight	*Some fine to small size particles*
	3 = Particulate Matter	*Many small particles floating or settled on the bottom*
	4 = Dirty	*Discoloration of the sample due to solids*
Water	**A = Bright**	*No water; Air bubbles may cause hazy appearance that clears within 1 minute*
	B = Hazy	*Fine water droplets dispersed throughout.* *Haze may go away when the sample warms, but must be reported*
	C = Cloudy	*Sample appears cloudy or milky*
	D = Wet	*Droplets or a layer of water on the side or bottom*
	E = Surfactants	*Fine lacy or soapy material on surface*

Comments:

Color: *Jet A: white or light straw color; 100LL: Blue → Report unusual color*
Example: Sump rating for clear with haze = 1-B
Note: Report rating for the first sump sample

Filter Vessel Inspection Record

Facility:	**Month:**	**Year:**
Tank or Vehicle No. :	**Vessel MFG:**	**Operating Flow (gpm):**
Date of Last Filter Element Change:	**Model No.**	**Element Part No.**
Date of Last Interior Inspection:	**Last Water Defense Check:**	**Circle One:** Jet A Avgas

Differential Pressure (psi)																															
25																															
24																															
23																															
22																															
21																															
20																															
19																															
18																															
17																															
16																															
15																															
14																															
13																															
12																															
11																															
10																															
9																															
8																															
7																															
6																															
5																															
4																															
3																															
2																															
1																															
Day	1	2	3	4	5	6	7	8	9	10	11	12	13	14	15	16	17	18	19	20	21	22	23	24	25	26	27	28	29	30	31
Signature																															

Fuel Farm - Daily/Monthly Inspection Checklist

Facility ID:	Manager/Trainer:																					Month:						Year:			
Daily Inspections	1	2	3	4	5	6	7	8	9	10	11	12	13	14	15	16	17	18	19	20	21	22	23	24	25	26	27	28	29	30	31
1. General Housekeeping/Maintenance																															
2. Security and Fire Safety																															
3. Fuel Leaks																															
4. Bonding Cables, Clamps and Reels																															
5. Fire Extinguishers																															
6. Waste Fuel Tanks																															
7. Hoses, Swivels & Nozzles																															
8. Sump Checks																															

S – Satisfactory **C – Comment** **N/U - Not Used** **N/A – Not Applicable** (Record Differential pressure and results of white bucket tests on a separate form provided on page 6-3)

Signature of person performing tasks or person accepting responsibility that tasks were performed																															

Monthly Inspection:	**Rating**	**Date**	**Signature**
1. Membrane Filter Test (Color)			
2. Nozzle Screens			
3. Free Water (ppm)			
4. Signs & Placards			
5. Floating Suction			
6. Emergency Shutdown System			
7. Fire Extinguishers (Seal & Insp. Date)			
8. Bonding Cable Continuity (< 25 ohms)			

Maintenance Action:

Comments:

Annual/Semi-Annual Inspection Checklist

Facility ID:	**Manager/Trainer:**			**Year:**
Annual Inspection:	**Rating**	**Date**	**Signature**	**Maintenance Action:**
1. Filter Element Replacement				
2. Storage Tank Interiors				
3. Check Water Defense Systems				
4. Filter/Separator Heaters				
3. Tank High Level Controls				
6. Meter Calibration				
7. Tank Vents				
5. Pressure Gauge Accuracy				
8. Cathodic Protection				
9. Line Strainers				
10. SPCC Plan (Review every 5 years)				

Comments:

Storage Tank Inspection and Cleaning Record

Facility:	**Tank/Refueler:**		
Date of Inspection	**Rating**	**Date Cleaned**	**Signature**
Comments:			

Suggested Ratings:
Contamination: **Clean** **Trace** **Moderate** **Heavy**
Note: Record approximate coverage of tank bottom surface in tenths
Contaminant: **Sediment** **Rust** **Microbial Growth**

ATTACHMENT 4

TYPICAL SPILL BOX SPECIFICATION

POMECO/OPW 211-RMOT Remote-Fill Above Ground Storage Tank Spill Containers

POMECO/OPW Remote-Fill AST Spill Containers are designed to prevent spilled product from entering soil near the remote, horizontal-fill and vapor return connections on an above ground storage tank during normal tank filling operation. The spill containers catch spillage to help prevent soil contamination and groundwater pollution. POMECO/OPW Remote-Fill AST Spill Containers slip on the remote-fill and vapor return piping connected to an above ground tank. Compatible with methanol, ethanol, jet and AV-Gas fuels.

Features

- **Easy Installation** – a 4" flexible boot on the back panel allows for a quick, simple connection to the remote fill or vapor lines. Optional reducer inserts are available to accommodate 3" and 2" piping connections.
- **Models to Accommodate Various Fill Pipe Configurations** – available in 15, 20 and 30-gallon container capacity. Smaller 15-gallon models are designed for a single-fill or vapor return connection. Larger 20 and 30-gallon models accept both fill and vapor return piping in a dual-port configuration. The 30-gallon model will accommodate both fill and vapor return piping in a single-port configuration and allow the use of 3" Dry Disconnects (OPW 1611AN and 1711D) in a dual-port configuration.
- **Rain-Shedding Cover Design** – hooded cover design helps prevent water or snow entry by extending the lip of the cover over the body of the spill container.
- **12-Gauge Epoxy-Powder Coated Steel or Stainless Steel Construction** heavy-duty materials, compatible with hydrocarbons, for long service life and added security.

- **Welded-Hinge, Lockable Hatch** – cover includes a provision for a padlock and a welded-hinge assembly for added security.
- **Easy Product Drainage** – lockable ball valve drain provides for quick and easy product removal.
- **Height Adjustable** – adjustable legs enable the spill container to be set at a variety of heights, from 16½" to 30". Each leg is independently adjustable to account for uneven ground conditions.
- CARB Certified
- Custom Sizes Available Upon Request.

Ordering Chart:

6		R –				
	211 211SS		15 20 30	0 1 2	B2 B3 B4 N	L LD N ND

211 – 12 Gauge Powder-Coated Steel Construction
211SS – Stainless Steel Construction

15 – 15 Gallon Capacity
20 – 20 Gallon Capacity
30 – 30 Gallon Capacity

0 – No entry holes
1 – 1, 4" entry hole
2 – 2, 4" entry holes (30 Gallon Only)

B – Booted entry fittings in holes
N – No fittings in holes

2 – 2" Fitting
3 – 3" Fitting
4 – 4" Fitting

L – Adjustable legs and No base drain valve
LD – Adjustable legs with base drain valve
N – No legs and No base drain valve
ND – No legs with base drain valve

Note: an item must be selected for each column.

Dimensions

	15 Gallon Weight 91 lbs. (41 kg)		20 Gallon Weight 135 lbs. (61 kg)		30 Gallon Weight 175 lbs. (79 kg)	
	in.	cm	in.	cm	in.	cm
A	18¼	46	24	61	21	53
B	7⅜	19	7½	19	10½	27
C	13⅝	35	16½	42	16½	42
D	16½ to 30	42 to 76	16½ to 30	42 to 76	16½ to 30	42 to 76
E	18¼	46	24	61	34	86
F	9⅛	23	12	30½	9½	24
G	47 to 60½	119 to 154	56½ to 80	144 to 203	56½ to 80	144 to 203

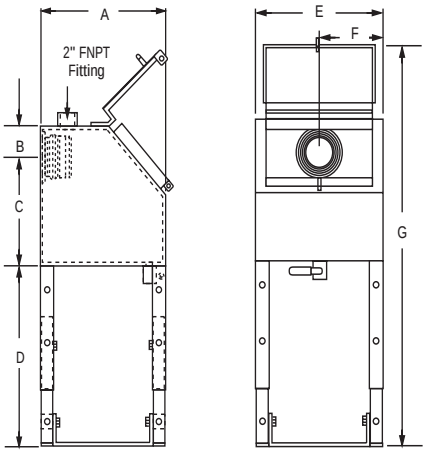

Replacement Parts

Part #	Description
201758	4 x 2 Reducer Insert
201759	4 x 3 Reducer Insert
PBOOT	Nitrile (Fuel-Resistant) Boot
202312	Aluminum Flange
21BV-0075	Fullport ¾"
PRMOT-LEGKIT	Leg Kit

211R Instruction Sheet Order Number: H15857PA
PC04427 - Brass Drain Valve

©2013 OPW Fueling Components

ATTACHMENT 5

TYPICAL TRANSFER PUMP SPECIFICATION

DIMENSIONS 501-123		TYPE	SIZE	UNIT STYLE	
Section	501	LGL3021A	3	PO	Blackmer Part of Pump Solutions Group A DOVER COMPANY www.blackmer.com
Effective	MARCH 2012				
Replaces	JANUARY 2012				
Page 1 / 1					

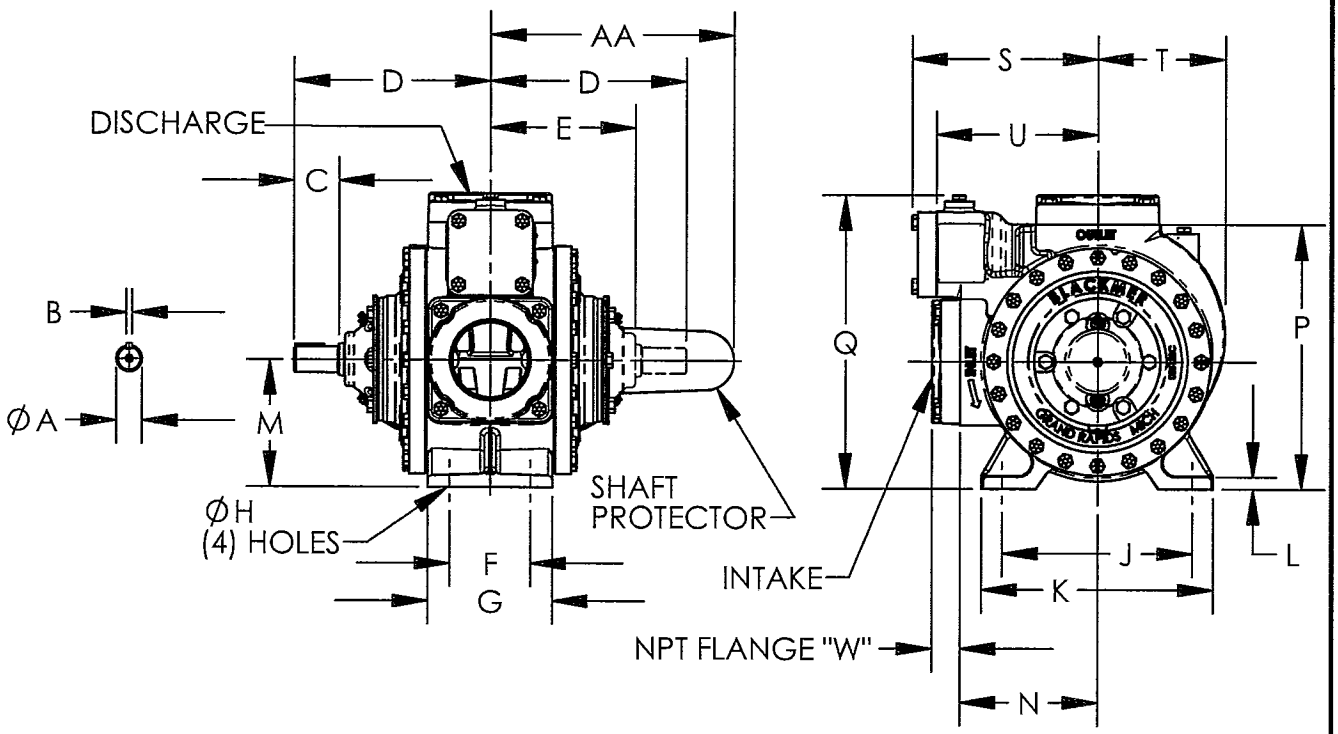

OPTIONAL PIPE CONNECTIONS:
3" NPT FLANGE, NODULAR
4" NPT FLANGE, NODULAR

MOTOR			UNITS	DIMENSIONS									
FRAME SIZE				A	B	C	D	E	F	G	H	J	K
			IN	1 1/8	1/4	2	8 1/2	6 5/16	3 1/2	5 3/8	17/32	8 1/4	10
			MM	28,6	6,4	50,8	215,9	160,3	88,9	136,5	13,5	203,2	254
				L	M	N	P	Q	R	S	T	U	V
			IN	1/2	5 1/2	5 15/16	11 7/16	12 11/16		7 15/16	5 1/2	7	
			MM	12,7	139,7	150,8	290,5	322,3		201,6	139,7	177,8	
				W	X	Y	Z	AA	BB	CC	DD	EE	FF
			IN	1 1/4				10 9/16					
			MM	31,7				268,3					
				PUMP WEIGHT		WITH STD FLANGES							
				150 LBS		157 LBS							
				68 KG		71 KG							

CHARACTERISTIC CURVES
Model LGL3021A

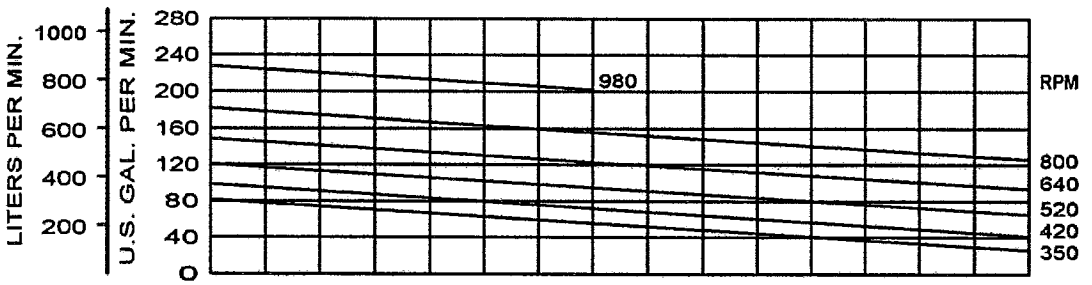

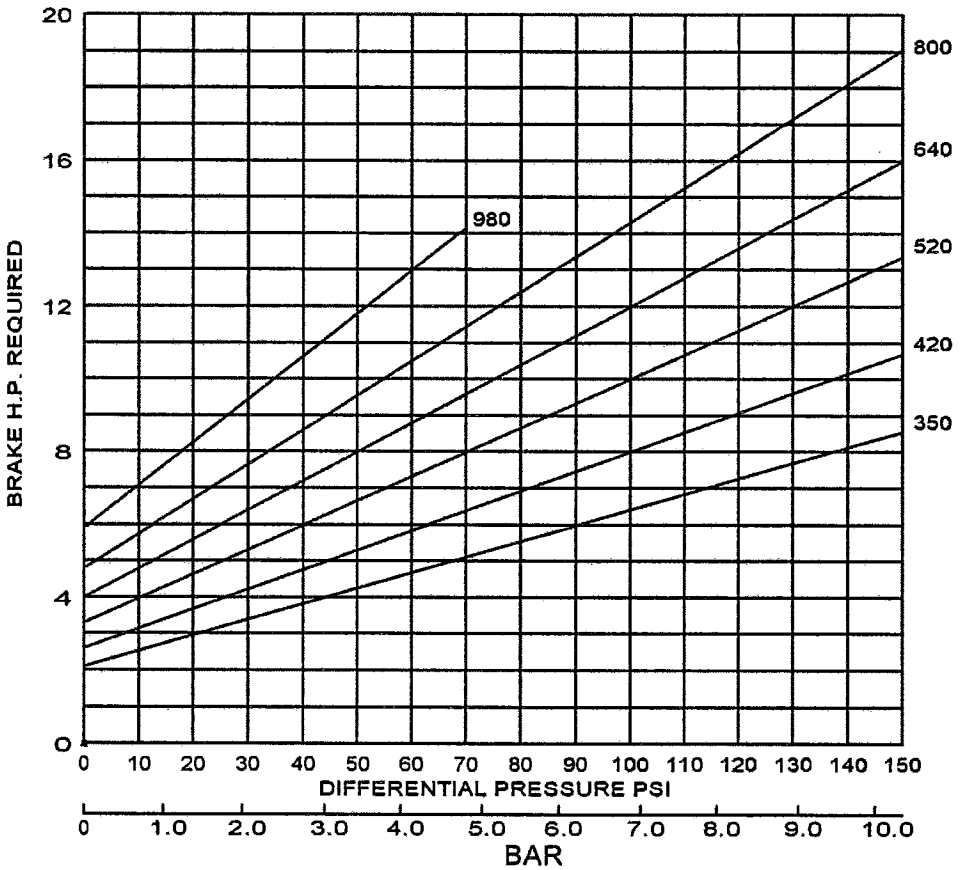

NOTE: Blackmer Characteristic Curves are based on Brake Horsepower (BHp). To determine Motor Horsepower, drive train inefficiencies must be added to the BHp.

These curves are based on approximate delivery rates when handling propane or anhydrous ammonia at 80°F (26.7°C). Line restrictions such as excess flow valves, elbows, etc., will adversely effect deliveries. For propane at 32°F (0°C), actual delivery will be further reduced to about 80% of nominal. Delivery of butane at 80°F (26.7°C) will be 60 to 70% of these values, and may run as low as 35 to 45% at 32°F (0°C). This loss of delivery is not a pump characteristic but is caused by natural thermodynamic phenomena of liquefied gases.

ATTACHMENT 6

TYPICAL TRANSFER PUMP MOTOR SPECIFICATION

General Information
- Overview
- Specifications
- Performance Data
- Parts List
- Drawings

More Information
- Where To Buy
- Baldor Sales Offices

Return to List

AC Motors | Explosion Proof | Three Phase | 10 HP | 230/460 Volt |

Product Overview: EM7574T-I

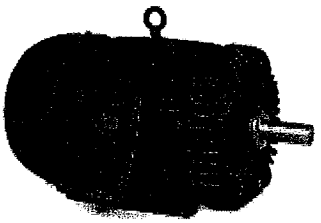

* Click for Larger Image

Catalog Number:	EM7574T-I
Description:	10HP,3510RPM,3PH,60HZ,215T,TEFC,FOOT,
Ship Weight:	206 lbs.
List Price:	$2930 USD
Multiplier Symbol:	SD

View Specifications | View Operation Manual

FEATURES

- Designed with Super-E NEMA Premium efficiency
- Severe Duty XEX features
- 1.15 service factor
- UL and CSA approved for Class I, Group D, Class 2, Group E, F and G, T3C

APPLICATIONS

Harsh industrial environments that contain hazardous gas and vapor, dust, fibers, filings or other material that may have explosive properties.

Caution: This explosion-proof motor design is not suitable for use with adjustable speed drives. An inverter duty explosion-proof motor must be used.

* The image shown is representative only. Actual product may differ in appearance from image shown.

Copyright © 2001-2013 Baldor Electric Company. All rights reserved.

General Information
- Overview
- Specifications
- Performance Data
- Parts List
- Drawings

More Information
- Where To Buy
- Baldor Sales Offices

Return to List

AC Motors | Explosion Proof | Three Phase | 10 HP | 230/460 Volt |

Specifications: EM7574T-I

CLASS-I-GROUP:	D X X
CLASS-II-GROUP:	E F G
TEMP. CODE:	T3C
SPEC. NUMBER:	P21G582
CATALOG NUMBER:	EM7574T-I
AMBIENT-TEMPERATURE:	40
FL AMPS:	22.2/11.1
BEARING-DRIVE-END:	6208
BEARING-OPP-DRIVE-END:	6206
BRG-DE-AFBMA:	40BC02J30X
BRG-ODE-AFBMA:	30BC02J30X
DESIGN CODE:	B
DUTY:	CONT
FL EFFICIENCY:	91.0
EFFICIENCY-1:	92.0
EFFICIENCY-2:	89.5
EFFICIENCY-3:	--
ENCLOSURE:	TEFC
FRAME:	X215T
HERTZ:	60
HORSEPOWER:	10
INSULATION CLASS:	F
KVA-CODE:	H
SPEED [rpm]:	3510
MOTOR-WEIGHT:	--
PHASE:	3
POWER-FACTOR:	93.6
POWER-FACTOR-CORRECTION CAPAC:	00.4
SERIAL-NUMBER:	--
SERVICE FACTOR:	1.15
TYPE:	P
VOLTAGE:	230/460

* For certified information, contact your local Baldor office.

Copyright © 2001-2013 Baldor Electric Company. All rights reserved.

ATTACHMENT 7

TYPICAL FILTER VESSEL SPECIFICATION

HFG Series Horizontal Fuel-Gard® Monitor Housings

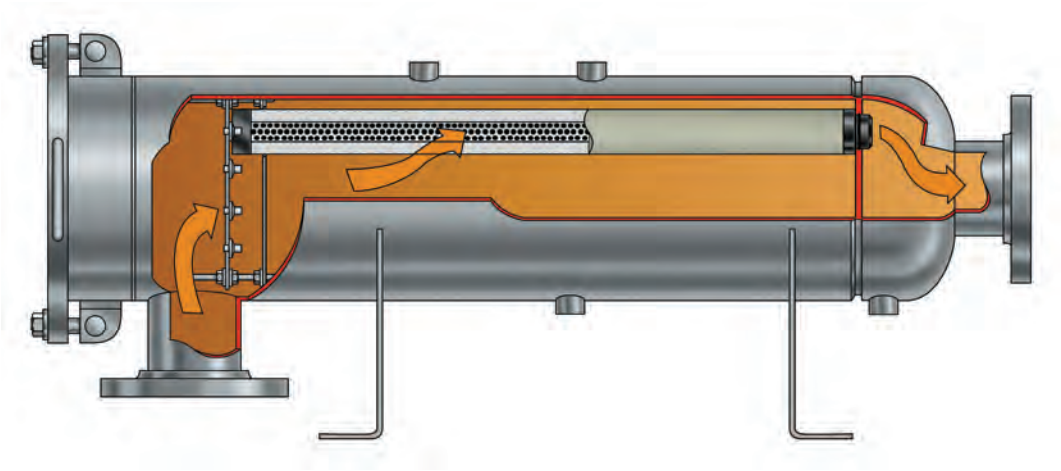

The Facet HFG Series Horizontal Fuel-Gard® monitor housings, equipped with Facet's FG Series monitor cartridges, continually check the entire flow of fuel, not just mere samples, for water or solids contamination. By performing three jobs, the FG Series monitors assure clean, dry fuel. They absorb free and emulsified water, remove ultra-fine solids, and shut down system flow when hit with a localized slug of water. They are designed to flow from the outside to inside at a rate of 1 gallon (3.79 liters) per inch of length.

Facet's Fuel-Gard® monitor housings are built to ASME Code, constructed of carbon steel and designated for maximum working pressure of 150 psi. They are furnished with FG Series monitor cartridges that meet and exceed the latest edition of EI Specification 1583 Aviation Fuel Filter Monitors with Absorbent Type Elements.

STANDARD HOUSING DESIGN

- EI 1596 Design & Construction
- Welded carbon steel construction—other materials available on request
- ASME Code, Section VIII construction, stamped and certified
- Maximum working pressure: 150 psi
- Swing bolt closures on 8⅝" (219 mm.) OD housings and larger
- Buna-N closure o-ring—other materials available
- Exterior: Prime coated
- Interior: Epoxy coated (MIL-PRF-4556)
- Spider plate

STANDARD CONNECTIONS

- Flanged inlet and outlet connections
- Drain connection: ¾" NPT
- Vent and relief valve connections: ¾" NPT
- Differential pressure gauge connections: ¼" NPT

OPTIONS

- Automatic air eliminator
- Automatic air eliminator check valve
- Pressure relief valve
- Differential pressure gauge
- Sampling probes
- Manual drain valve
- Victaulic inlet and outlet connections
- Interlock Device

©2009 PECOFacet has a policy of continuous product research and development and reserves the right to change design and specifications without notice.

HFG Series Horizontal Fuel-Gard® Monitor Housings

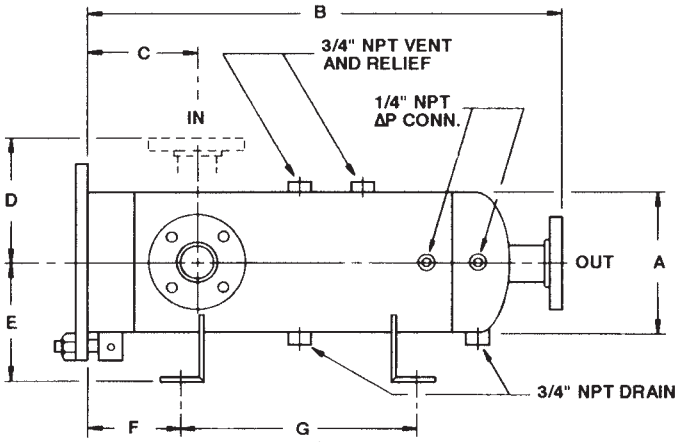

DATA

MODEL NUMBER	FLOW RATE		REQUIRED CARTRIDGES[1]		LIQUID VOLUME		DRY WEIGHT		HOUSING TYPE
	gals.	ltrs.	qty.	model	qty.	ltrs.	lbs.	kgs.	
HFG-C-5210	50	189	5	FG-210-6	3	11	235	107	FLAT
HFG-C-5220	100	379	5	FG-220-6	4	15	250	113	FLAT
HFG-C-5230	150	568	5	FG-230-6	5.5	21	265	120	FLAT
HFG-C-10220	200	757	10	FG-220-6	7.5	28	310	141	FLAT
HGF-C-10230	300	1136	10	FG-230-6	10	38	350	159	FLAT
HFG-C-20230	600	2271	20	FG-230-6	20	76	385	175	FLAT
HFG-C-30230	900	3406	30	FG-230-6	30	114	450	204	FLAT
HFG-C-40230	1200	4542	40	FG-230-6	40	151	490	222	FLAT

DIMENSIONS

MODEL NUMBER	INLET/OUTLET DIAMETER		A		B		C		D		E		F		G	
	in.	mm.	in.	mm.	in.	mm.	in.	mm.	in.	mm.	in.	mm.	in.	mm.	in.	mm.
HFG-C-5210	2	51	6⅝	168	28	711	7	178	7	178	6¼	159	6	152	13	330
HFG-C-5220	2	51	6⅝	168	38	965	7	178	7	178	6¼	159	6	152	23	584
HFG-C-5230	2	51	6⅝	168	48	1219	7	178	7	178	6¼	159	6	152	33	838
HFG-C-10220	3	76	8⅝	219	40	1016	8	203	8	203	7¼	184	6	152	24	610
HGF-C-10230	4	102	8⅝	219	52	1321	9	229	8	203	7¼	184	6	152	36	914
HFG-C-20230	6	152	12¾	324	55	1397	10	254	10	254	9½	241	6	152	38	965
HFG-C-30230	6	152	14	356	55	1397	10	254	11	279	10	254	6	152	38	965
HFG-C-40230	6	152	16	406	56	1422	10	254	12	305	11	279	6	152	38	965

All dimensions, weights and volumes are approximate and are for estimating purposes only.

WARNING: MONITOR CARTRIDGES SHOULD NEVER BE USED WITH FUELS CONTAINING ANTI-ICING ADDITIVES SUCH AS FSII, PRIST AND DI-EGME. THIS INCLUDES PRE-MIXED AND MILITARY FUELS CONTAINING THESE ADDITIVES. THE USE OF MONITOR CARTRIDGES WITH FUELS CONTAINING ANTI-ICING ADDITIVES MAY RESULT IN (1) A FAILURE OF THE MONITOR CARTRIDGE AND/OR (2) MIGRATION OF FILTRATION MEDIA INTO THE FUEL STREAM, EITHER OF WHICH COULD POTENTIALLY CAUSE DAMAGE TO OR SUDDEN FAILURE OF THE CORRESPONDING ENGINE. THE SUPPLIER SHALL NOT BE LIABLE IN ANY RESPECT FOR ANY DAMAGE OR LOSS THAT ARISES FROM THE USE OF MONITOR CARTRIDGES WITH FUELS CONTAINING ANTI-ICING ADDITIVES. SUCH USE IS ENTIRELY AT THE USER'S RISK.

©2009 PECOFacet has a policy of continuous product research and development and reserves the right to change design and specifications without notice.

ATTACHMENT 8
TYPICAL FUEL SUMP SPECIFICATION

SCHULTZ
ENGINEERED PRODUCTS INC.
AVIATION FUEL HANDLING EQUIPMENT

BULLETIN 98-26

Email info@schultzproducts.com
Web www.schultzproducts.com

AVIATION FUEL RECOVERY UNITS

Model SC-9000 Aviation Fuel Recovery is an essential tool in minimizing waste fuel from fueling facilities of all sizes. Units are available from 15 gal to 300 gal.

Units allow fuel contaminated with water and sediment to enter through a tangential nozzle which swirls the mixture to separate water and sediment from clean fuel.

Unit works on the principal that fuel and water are immiscible, and of a different density.

Operator can view fuel/ water interface from top of low profile unit or from optional sight glass while simply opening water draw-off valve to drain off waste. Once water and sediment are drawn off, clean fuel can be pumped back to storage.

50 GALLON UNIT STAINLESS STEEL
LOCATION: CHANNEL ISLAND ANG BASE

RECOVER FUEL FROM

- Tank Sumps
- Filter Sumps
- Low point drains
- High point vents
- Samples from fuel truck receipts.
- Membrane filtration tests
- Drained fuel from filter change out

BENIFITS

- Conserves fuel
- Decreases filtration cost
- Reduced environmental impact
- Improves SWPP*
- Eliminates fuel disposal costs
- Maintains storage tank sumps
- Safe means of collecting fuel

SCHULTZ
ENGINEERED PRODUCTS INC.
AVIATION FUEL HANDLING EQUIPMENT

BULLETIN 98-26

SPECIFICATIONS

15 GAL CAPACITY
STAINLESS STEEL
WITH HAND PUMP

Electrical components compliant with NEC code article 500
Explosion proof
Div 1,2 Class 1 Groups C&D
Class 2 Groups F & G

Standard Pump.
1HP Positive displacement
ductile iron 15 GPM@ 100 TDH

Hand pump aluminum rotary
5 GPM at 10 TDH

Single phase voltage 115/208-230V
6.7 amps@ 230V

Shell- 12 gauge carbon steel, white fuel resistant powder coat inside and out. 304 stainless available

Capacity from 15 to 300gal

1-1/4 NPT piping units 50 gal and up

AVALIBLE OPTIONS

- Defueling
- PLC controls
- Automatic over fill protection
- Hand pump
- Facet VF21 filter
- 1 micron Coalescer or water absorbing elements
- 12 gauge Carbon steel or 304 Stainless steel construction
- Differential pressure gauge
- Remote sample jar
- Dead-man and water draw-off valves
- Socket weld fittings
- Stainless ball valves
- Explosion Proof oil-bath heater for cold climates

Schultz Engineered Products Inc. Box 928 Oakhurst NJ PH 732- 922-4334 FX 732-922-0370

Email info@schultzproducts.com
www.schultzproducts.com

BASIC ORDERING INFO:

Example below is a 50 gal stainless steel unit with pump, stainless steel socket-weld valves, fittings, return to storage piping, check valve, Facet VF21 filter housing, defuel option, sightglass, and deadman valves. If assistance with part # is needed please call or email.

SC-9000-050-SS-SW-123679

CAPACITY		CONSTRUCTION	FITTINGS	OPTIONS
015	15 GAL	CS- Carbon steel	TH=Threaded	NP = Unit w/o Pump
050	50 GAL	SS - Stainless steel	BW= Butt weld	0=Basic unit/ with pump
100	100 GAL	NP Unit w/o pump	SW=Socket weld	1=Return to storage
200	200 GAL			2=Discharge check valve
300	300 GAL			3= Facet VF21 Filter
XXX	Custom			4=Filter drain conection
				5=Filter drain bypass
				6=Defuel option
				7= Adds sightglass
				8=Automatic oil bath
				9=Deadman valves on-Inlet and water drawoff

SCHULTZ
ENGINEERED PRODUCTS INC.
AVIATION FUEL HANDLING EQUIPMENT

BULLETIN 98-26

Email info@schultzproducts.com
www.schultzproducts.com

AVIATION FUEL RECOVERY UNIT OPTIONS

OPTION 1

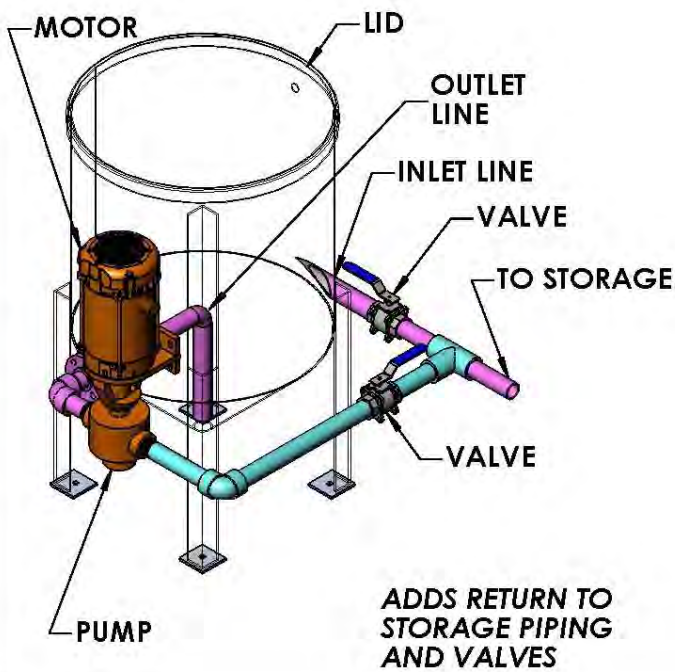

ADDS RETURN TO STORAGE PIPING AND VALVES

OPTION 2

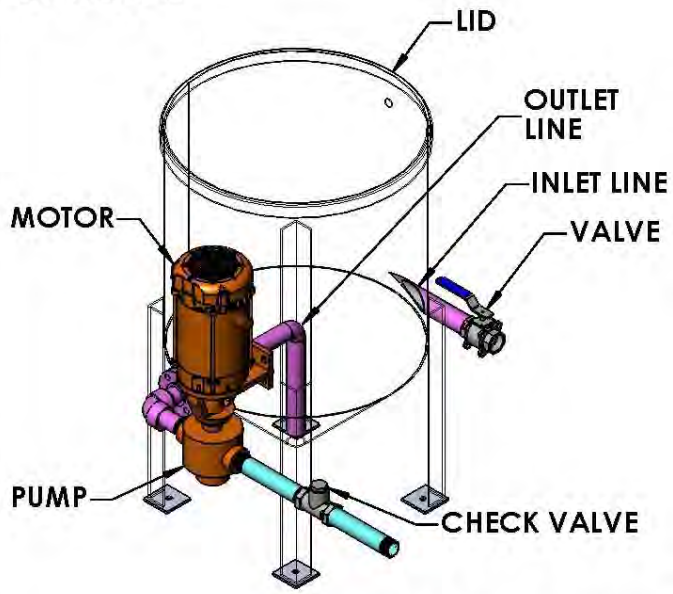

ADDS CHECK VALVE AFTER PUMP

OPTION 3

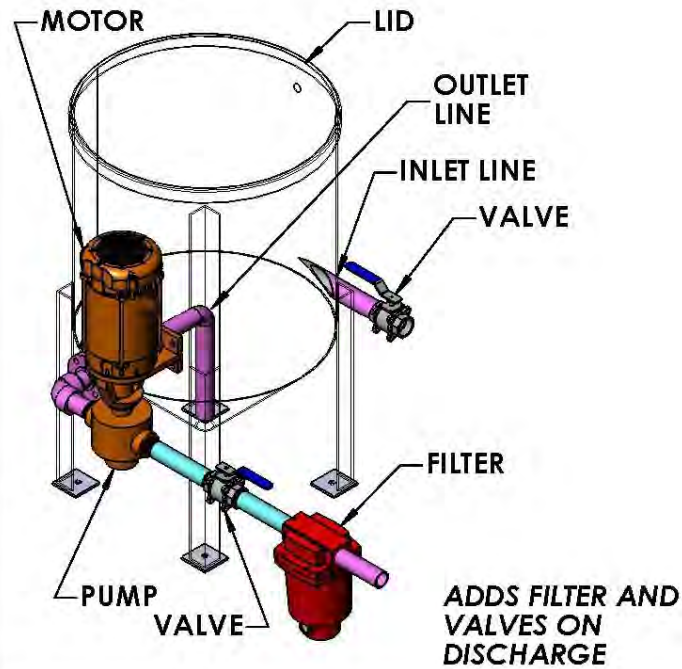

ADDS FILTER AND VALVES ON DISCHARGE

OPTION 4

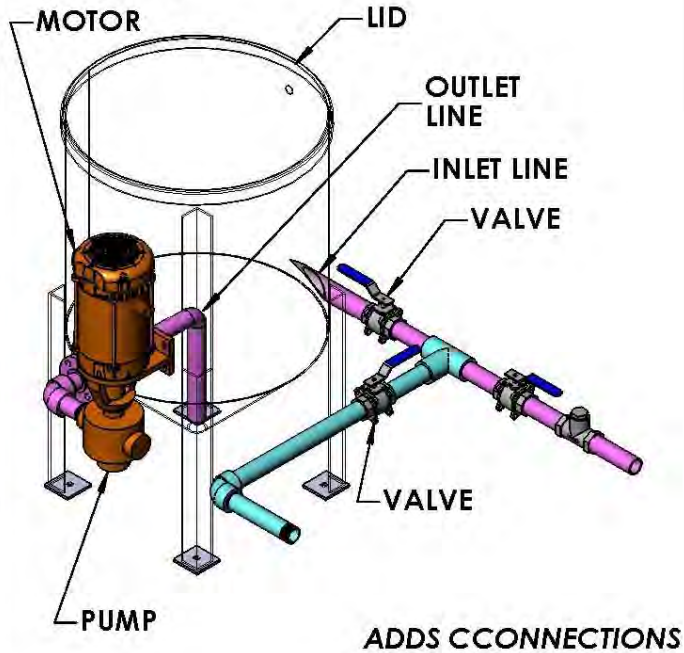

ADDS CCONNECTIONS FOR FILTER DRAIN

Email info@schultzproducts.com
www.schultzproducts.com

AVIATION FUEL RECOVERY UNIT OPTIONS

OPTION 5

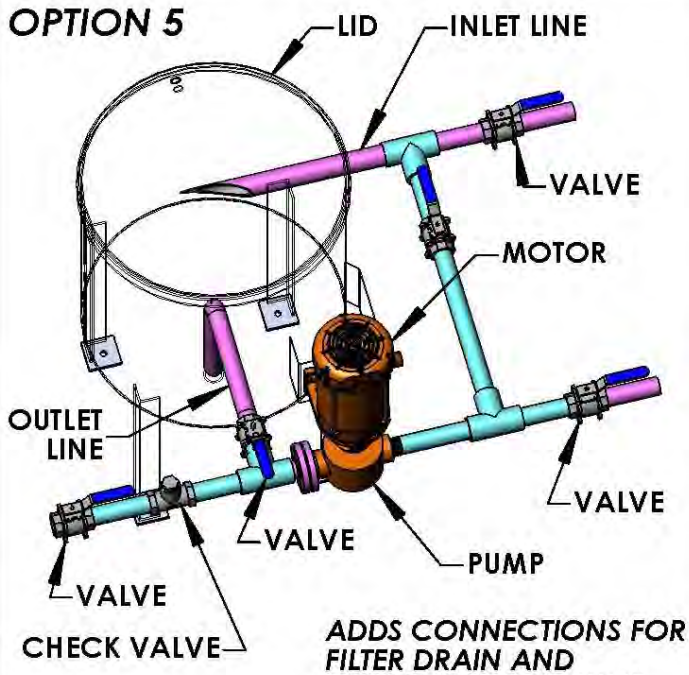

ADDS CONNECTIONS FOR FILTER DRAIN AND BYPASS AROUND SUMP

OPTION 6

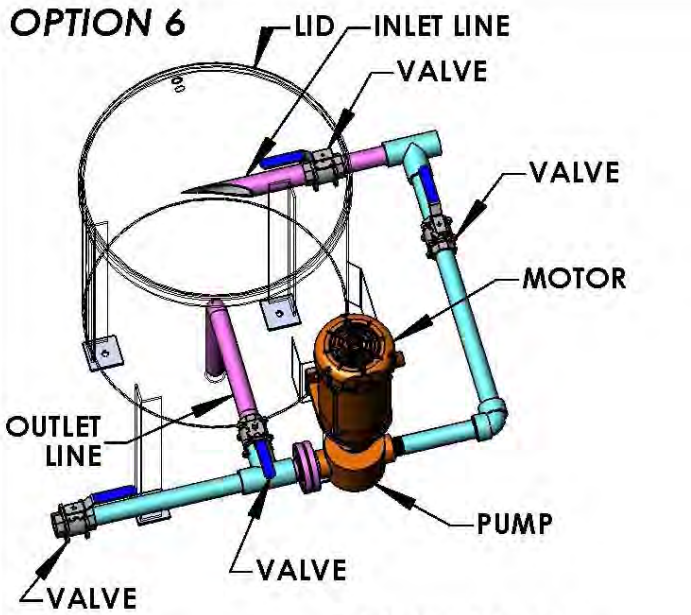

ADDS DEFUELING OPTION AND FITTINGS

OPTION 7

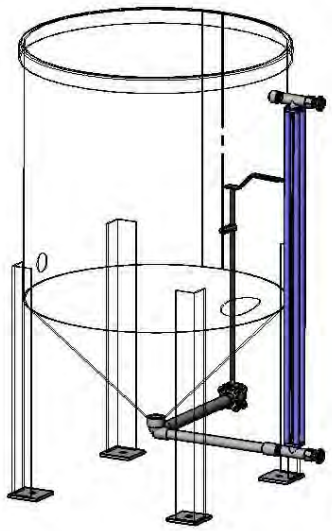

ADDS SIGHT GLASS TO INDICATE FUEL/ WATER INTERFACE LEVEL

OPTION 8

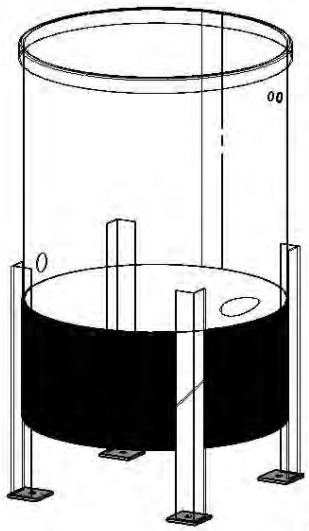

ADDS AUTOMATIC OIL BATH HEATING SYSTEM WITH EXPLOSION PROOF COMPONENTS

Email info@schultzproducts.com
www.schultzproducts.com

SC-9000-50

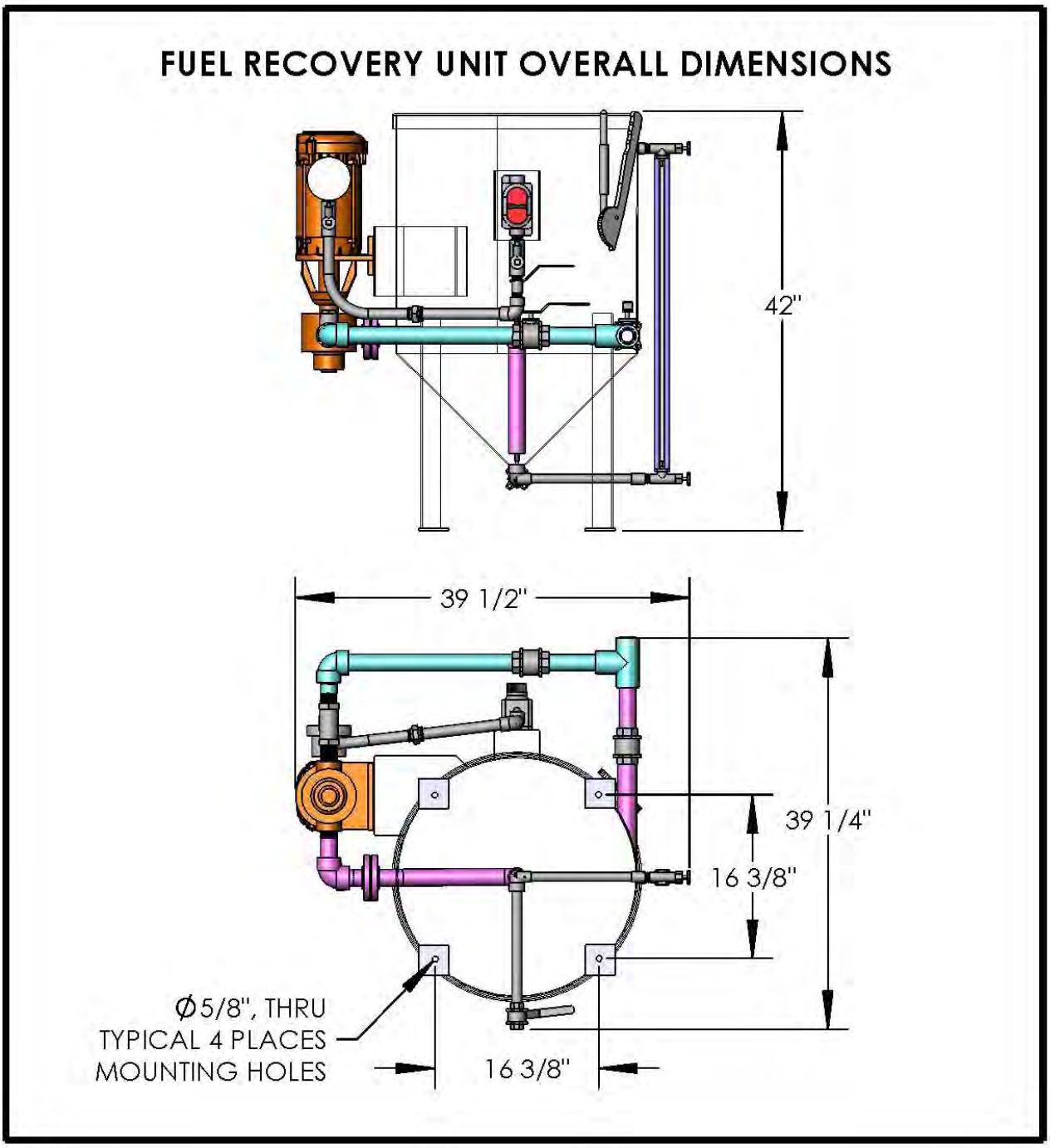

Email info@schultzproducts.com
www.schultzproducts.com

AVIATION FUEL RECOVERY UNIT

SC-9000-50

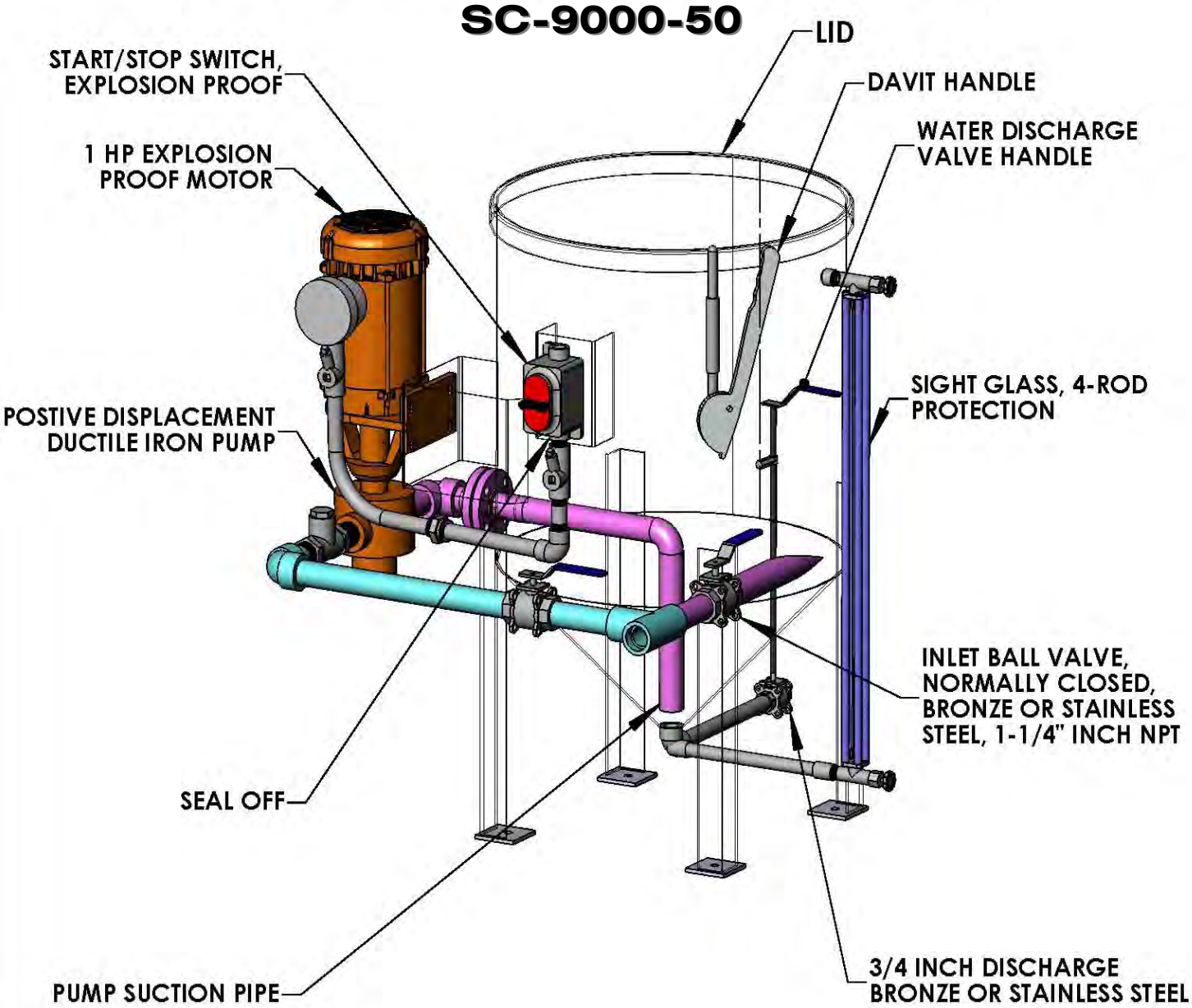

ATTACHMENT 9

DRESSER WAYNE, TYPICAL FUEL DISPENSER SPECIFICATION

Standard features deliver a solid solution

Equipped with a rich set of standard features, the Reliance G6200 dispenser offers exceptional value. Based on years of experience and industry leadership, Wayne incorporates outstanding features into every dispenser.

- Internal filters help ensure product purity
- All user controls meet American Disability Act requirements
- Nozzle boots fit both standard and vapor recovery nozzles
- Satellite piping connections are provided for use with satellite dispensers

Reliance G6200 Specifications

Performance: Up to 22 GPM (83 lpm) per hose (exception: Twin I suction is 22 GPM per one hose operating, or 12 GPM (45 lpm) per hose with both operating).

Note: Specified rates are maximum test rates at the discharge. Actual flow rates will depend upon the installation conditions, dispenser accessories, and for remote dispensers, size of the submersible pump.

Compatibility: For dispensing low viscosity petroleum fuels - diesel; biodiesel blends up to 20%; gasoline, including oxygenated blends; kerosene; AvGas^, and jet fuel^. See E85 option and Approvals. Fuel must meet the applicable ASTM standard.

^Note: Confirm with fuel supplier on any fluid path metal restrictions before use. Install the proper filtration and water separation equipment necessary for aviation fueling.

Register: Non-computer mechanical register with power reset with interlock. Displays on both sides of cabinet. Maximum 999.9 gallons.

Totalizer: Non-resettable totalizer up to 9999999.9. Displays on front dial face.

Meter: Reliable, micro-accurate 2-piston positive displacement design. Weights & Measures sealable.

Pumping Unit++: Positive displacement, self-priming, gear-type pumping unit with integral centrifugal air separator and adjustable bypass valve. Suction strainers at inlet connection.

Motor++: 1-HP continuous duty with thermal overload protection. Adjustable V-link belt connects to pump pulley.

Electrical: 115VAC, 60Hz operation. Motors – 115/230VAC 50/60Hz.

Internal Filter [G]: Adapter with ten-micron filter helps ensure product purity.

Inlet Connection: 1½" NPT (3.8 cm).

Discharge: 1" NPT (2.5 cm) with ¾" reducing bushing.

Solenoid Valve: 1" (2.5 cm) two-stage valve. Standard on remote dispensers and Twin I suction. Also provides slow flow control for fuel control systems. With E85 option, valve is single stage.

Satellite Connection: Discharge assembly includes 1" NPT (2.5 cm) internal port for satellite piping connection on remote dispensers.

Cabinet Finish: Extremely durable powder-coated finish gives outstanding appearance and toughness. Sides, top, bezel, and base painted metallic silver. Doors painted blue (optional black, brown, green, red, silver, yellow, or white). Black register face.

Cabinet Construction: All panels are fabricated from heavy gauge galvannealed steel. 14-gauge side panels and 18-gauge doors. Top of bezel provides space for product id decals (specify w/ order).

Nozzle Boot and Hook: Side location is standard for access from either fueling lane. Fits standard U.L. interchangeable automatic nozzles. Hook may be adjusted for an OPW 11-VF long spout balanced vapor recovery nozzle. On/off handle for dispenser activation. Optional nozzle boot hood kit for fitting short spout balanced vapor recovery nozzles.

Hose Hanger [K]: Keeps hose off the island when not in use.

Actual Dimensions: 32.25" W x 19.38" D x 54.38" H (81.9cm W x 49.2cm D x 138.1cm H)

Approvals: C-UL-US -includes diesel; biodiesel blends to B5; gasoline including ethanol blends to E10 (to E85 with E85 option - UL only); & kerosene.

U.S. Weights & Measures - includes diesel; biodiesel; gasoline including oxygenated blends; kerosene; AvGas; and Jet Fuel.

Options

Pulsers: Transmit electrical pulses for each register revolution for connection to fuel control systems. 10:1 [7A] and 100:1 [7B] ratio options available.

E85 (E/ prefix): Remote dispensers only. Utilizes nickel-plating, hard anodizing, stainless steel, black iron piping, special elastomers, and a special filter for E85 compatibility. UL listed for ethanol blends up to E85 as well as gasoline and diesel.

Hose Mast Kit+ [//J]: Raises hose to ease hose handling and help keep stored hose out of the fueling lane. Optional hose mast clamp kit+ (p/n 890898-001) for Goodyear® vapor recovery hose.

Light [//A]: Illuminates register faces and backlights the translucent product id panels that are included with the light option. One bulb per side.

Lane-Oriented Nozzle Boot [5]: Locates nozzle boot with lift-to-start hook on front bevel. Fits standard UL interchangeable nozzles and Emco Wheaton 4015 and Husky V short spout balance vapor recovery nozzles. Hook extension kits+ for OPW 11VF (p/n 892081-001) and Healy 400 (p/n 892080-001) long spout vapor recovery nozzles. Register displays on side of cabinet with applicable nozzle boot.

Stainless Steel Panels: Ideal for very corrosive environments. All exterior panels [//S], all panels except painted galvannealed steel doors [//S1], or stainless steel doors only [//S2].

HealyVac Vapor Recovery: Remote dispensers only. Factory-installed Healy vapor recovery components for ORVR and EVR applications. One hose [D3] or two-hose [D4] options. Does not include hanging hardware.

Electrical Options: 230VAC 50/60 Hz. operation [Z]. For light option @ 50 Hz, also add [//C].

Other Options: Liter measure [8], internal hose retractor [//H], hand crank kit+ [3], reversed accumulative totalizer [//F], inlet check valve [//M], external filter kit+ (p/n 889921-001), solenoid valves [//W1] on suction models, & short spout vapor recovery nozzle boot hood kit+ (p/n 892101-001).

/V287S and /V288S Satellite Specifications

Cabinet Finish: Metallic silver sides and top with blue doors (optional black, brown, green, red, silver, yellow, or white doors).

Cabinet Construction: Heavy gauge galvannealed steel.

Inlet Connection: 1½" NPT (3.8 cm)

Solenoid Valve: 1½" (3.8 cm) two-stage.

Electrical: 120VAC, 60 Hz.

Discharge: 1" NPT (2.5 cm)

Nozzle Boot: Fits UL interchangeable nozzles. Lane-orientation. Lift nozzle hook to start operation.

Hose Hanger [K]: Keeps hose off the island when not in use.

Actual Dimensions: 35" W x 20" D x 41.5" H (88.9cm W x 50.8cm D x 105.4cm H)

Approvals: C-UL-US –includes diesel; biodiesel blends to B5; gasoline including ethanol blends to E10 (to E85 with E85 option – UL only); & kerosene. U.S. Weights & Measures – includes diesel; biodiesel; gasoline including oxygenated blends; kerosene; AvGas; and Jet Fuel.

Options: All stainless steel cabinet [//S], stainless steel sides and top with painted doors [//S1], or stainless steel doors only [//S2]. External filter kit+ (p/n 889921-001).

++Note: Applies to suction models only
+Note: Kits require field assembly

ATTACHMENT 10

HANNAY, TYPICAL HOSE REEL SPECIFICATION

Note to Designers and Engineers:

The reels shown in this catalog are the standard of the industry. These models reflect various installation and performance requirements.
The high quality of our standard steel construction is only the beginning.
Hannay Reels offers any size configuration to fit a defined space, and we construct many models of reels of aluminum or stainless steel. Specifically, we use 5000 and 6000 Series aluminum and 304 stainless steel in the manufacture of frames, discs, drums and internals as well as other structural components. This type of construction eliminates the need for maintenance repainting and part replacement due to rust or corrosion.

The drum diameters of the reel models listed have been used successfully for many years. However if your application requires a larger drum diameter to meet **API hose standards,** please remember it will also *increase the envelope dimensions* for the reel and *may incur an extra cost.*
Please note: Jet fuels require non-ferrous internal piping. Hannay Reels offers aluminum or stainless steel internals for 1" to 4" I.D. hose reels.
Please consult factory on any fuel handling questions.
For the many accessories and components available on our standard reel models such as roller guides, switches, brakes and locks, etc., please refer to our Ordering & Accessory Guide H-0415-OA.

Paint Notice

To meet the requirements and performance of vehicle and OEM apparatus paints we recommend our reels be painted with the same or equal paint as used on the specific apparatus the reel is being mounted on.

Hannay Reels will supply any model or custom reel or part with an automotive primer upon request, allowing application of final coating at your facility. Or at additional cost Hannay can prime / pre-paint all material before final assembly.

Consult factory for other optional finishes

Standard finish is oven cured enamel. High performance finishes for demanding and corrosive environments are available at an additional cost. Consult factory for specific requirements.

S E R I E S

1½"

MANUAL OR POWER REWIND REELS

To handle single 1" through 1-1/2" I.D. hose.

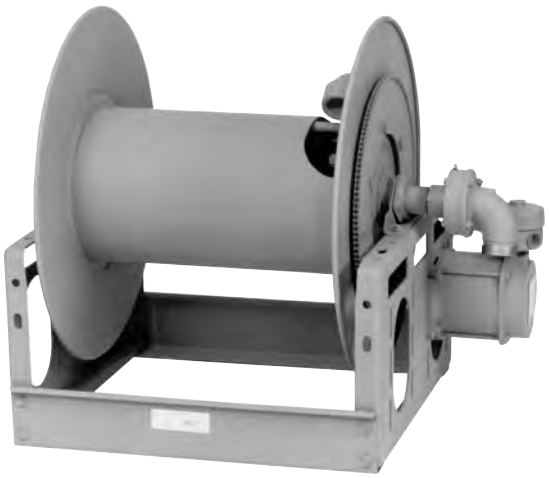

Standard Configuration Shown

- *A strong, heavy-duty reel.*
- *Gear-driven crank rewind or chain and sprocket drive powered by an electric, hydraulic or compressed air motor.*
- *Optional auxiliary crank rewind for power rewind reels.*
- *Crank rewind reels supplied with pinion brake and power rewind reels with a comet brake.*
- *90° ball bearing swivel joint with 1-1/2" female NPT threads and 2" victaulic groove.*
- *Flanged riser with 1-1/2" female NPT threads.*
- *Other sizes and/or threads can be furnished and must be specified.*
- *Standard inlet, outlet riser, hub assembly are aluminum for jet fuels.*
- *Stainless steel, at extra cost.*
- *Rollers and roller mounting brackets are accessory items. Specify roller position.*
- *Pressures to 600 psi (41 bar)*
- *Temperatures from -40°F to +175° F (-40° C to +79° C).*
- *Consult factory for other pressures & temps.*
- *Chainguards are available upon request, must be specified.*

Hannay Reels, Inc. Phone 518-797-3791 Toll Free 1-877-GO REELS (467-3357)
FAX 1-800-REELING (733-5464) USA or FAX 518-797-3259 (International) www.hannay.com reels@hannay.com

1½"

Parts Drawing – ISO 18

Model Number	Hose Capacity of Reel feet / m.					Approx. Weight Crank Rewind lb. / kg. See Note 4		Reel Dimensions*** inches / mm.									
For Power Rewind See Notes 4 & 5	I.D. (in) I.D. (mm)	1" 25	1-1/4" 32	1-3/8" 35	1-1/2" 38	NET	SHIP	A	B	D	E	F CRANK	F POWER	G	H	X	Y
	O.D. (in) O.D. (mm)	1.58" 40	1.89" 48	2" 51	2.06" 52												
26-19-21		70 21	60 18	50 15	50 15	99 45	141 64	23 584	17.5 445	20.5 521	18.75 476	29.5 749	31.88 810	21.5 546	12.12 308	15 381	16.75 425
32-19-21		100 30	90 27	85 26	75 23	112 51	154 70	29.5 749	24 610	20.5 521	18.75 476	36.0 914	38.38 975	21.5 546	12.12 308	21.5 546	16.75 425
40-19-21		125 38	100 30	100 30	100 30	128 58	170 77	37.5 953	32 813	20.5 521	18.75 476	44.0 1118	46.38 1178	21.5 546	12.12 308	29.5 749	16.75 425
24-23-24		100 30	90 27	80 24	50 15	102 46	144 65	21 533	15.5 394	20.5 521	22.75 578	27.5 699	29.88 759	23.5 597	12.12 308	13 330	16.75 425
32-23-24		150 46	150 46	125 38	75 23	119 54	161 73	29.5 749	24 610	20.5 521	22.75 578	36.0 914	38.38 975	23.5 597	12.12 308	21.5 546	16.75 425
38-23-24		200 61	190 58	170 52	100 30	130 59	172 78	35 889	29.5 749	20.5 521	22.75 578	41.5 1054	43.88 1115	23.5 597	12.12 308	27 686	16.75 425
20-25-26		110 34	70 21	60 18	50 15	106 48	148 67	17 432	11.5 292	25.5 648	24.75 629	23.5 597	25.88 657	27.88 708	15.5 394	9 229	21.75 552
24-25-26		140 43	95 29	85 26	75 23	114 52	156 71	21 533	15.5 394	25.5 648	24.75 629	27.5 699	29.88 759	27.88 708	15.5 394	13 330	21.75 552
28-25-26		200 61	130 40	120 37	100 30	123 56	165 75	25.5 648	20.0 508	25.5 648	24.75 629	32.0 813	34.38 873	27.88 708	15.5 394	17.5 445	21.75 552
16-30-31		90 27	50 15	50 15	50 15	106 48	156 71	13 330	7.5 191	25.5 648	28.75 730	19.5 495	21.88 556	29.88 759	15.5 394	7.75 197	21.75 552
20-30-31		155 47	140 43	80 24	75 23	114 52	164 74	17 432	11.5 292	25.5 648	28.75 730	23.5 597	25.88 657	29.88 759	15.5 394	9 229	21.75 552
*22-30-31		185 56	160 49	100 30	100 30	118 54	168 76	19 483	13.5 343	25.5 648	28.75 730	25.5 648	27.88 708	29.88 759	15.5 394	11 279	21.75 552
*28-30-31		275 84	250 76	175 53	150 46	131 59	181 82	25.5 648	20.0 508	25.5 648	28.75 730	32.0 813	34.38 873	29.88 759	15.5 394	17.5 445	21.75 552
*24-33-34		275 84	190 58	175 53	175 53	129 59	179 81	20.5 521	15.5 394	31.5 800	31.75 806	27.25 692	29.63 753	33.62 854	17.75 451	13 330	27.75 705

Notes:

1. Specifications subject to change.
2. Upon request, reels can be supplied with drum lengths other than shown and with disc sizes in other diameters.
3. Dimensions shown for reels up to and including 30-31 disc size reflect pressed frames. All others are rollformed channel frames.
4. Weights shown in chart are for crank rewind models. ADD these amounts for power rewind models:

	Net (lbs.)/(kg.)	Ship (lbs.)/(kg.)
Electric	**40**/18.1	**40**/18.1
Hydraulic	**20**/9.1	**20**/9.1
Air	**20**/9.1	**20**/9.1

5. When ordering power rewind models, prefix model number with:
   A = Air Rewind–Supplied with control valve and 18 " air hose.
   EPJ = Explosion Proof Electric Rewind (1/2 HP)–Supplied with explosion proof switch, solenoid, and junction box.
   HD = Hydraulic Rewind–Not supplied with control valve.
6. For Air Rewind on models over 100 ft. of 1-1/2" consult factory.
7. **Be sure to check dimensions and weights prior to ordering.**

NOTICE: A Flexible Connector must be used between the inlet pipe and the inlet swivel joint.

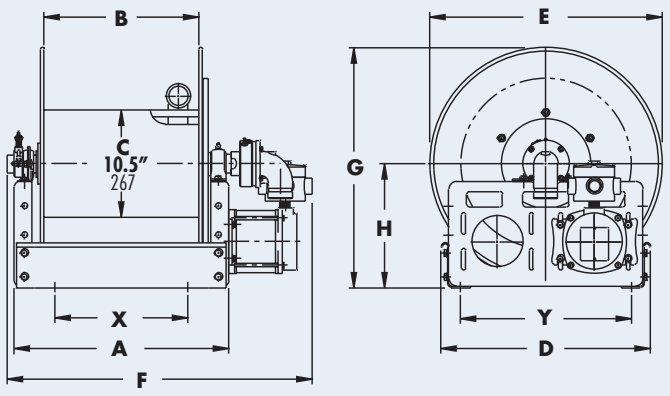

*** Some applications may require a different motor and/or a clutch/reduction unit.**

***x,y indicate mounting holes.

ATTACHMENT 11

HANNAY, TYPICAL GROUNDING REEL SPECIFICATION

Hannay Reels®
The reel leader.

HGR

For Grounding in Hazardous Areas

- These reels bond and/or ground aircraft, fuel trucks, and other equipment.
- Provide smooth operation and require minimum cable pull.
- Declutching arbor and adjustable guide arm with cable guide.
- Optional stainless steel construction of spool, frame, and ratchet system available.
- Standard finish is oven-cured enamel.
- Manual rewind version also available.
- Available with 1/8", 7x19 galvanized carbon steel cable.
- 100 amp alligator clamp.
- Stainless steel or plastic-covered cable and "Y" branches available at additional charge.
- Cable guide arm of cast aluminum and ZA12 alum zinc alloy.

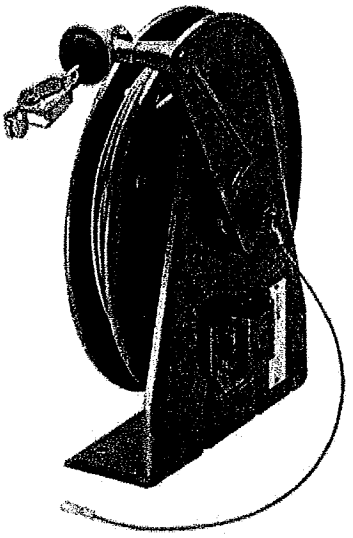

HGR Series Reel (Model HGR50 shown w/optional cable)

MODEL NO.	HOSE CAPACITY OF REEL			APPROX. WEIGHT	
	Hose/Cable Size	ft.	m	lb.	kg.
HGR100	3/16 vinyl coated	100	30.5	37	16.8
HGR50	3/16 vinyl coated	75	22.9	28	12.7
MHGR50	3/16 vinyl coated	125	38.1	18	8.2

HGR Reels

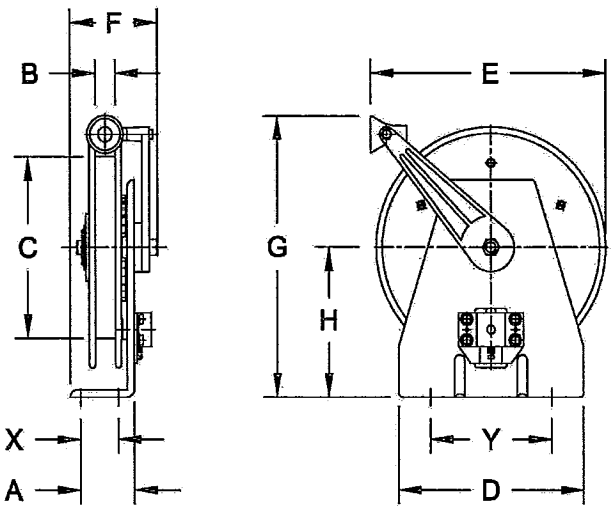

(1) Manual & Spring Reels; (2) Power Reels — Unit: inches

MODEL NO.	REEL DIMENSIONS									
	A	B	C	D	E[1]	F[1]	G	H	X	Y
HGR50	4	1.25	10.75	11.5	14.25	5.5	16.75	8.88	2.38	7.5

MHGR50	4	1.25	10.75	11.5	14.25	6.25	16.75	8.88	2.38	7.5
HGR100	4	1.25	13.25	11.5	16.75	5.5	17.75	8.88	2.38	7.5

1. Specifications subject to change.
2. To order, specify gauge, length, O.D., and coating, if required.
3. Specify "Y" branch, if required.
4. Specify complete model number.

ATTACHMENT 12

QT TECHNOLOGIES, M3000 PRO PAYMENT CARD READER SPECIFICATION

Card Reader Specifications

Processor
25 MHz processor with 1 MB random access memory and 1 MB non-volatile flash memory. This provides storage for approximately 300 transactions. Data will be retained in excess of one year in the event of a power loss.

Communications
An internal modem which allows the terminal to call for authorization of transactions before fuel is dispensed. The modem uses a single voice-grade dial-up telephone line.

Display
Display must be an easy-to-read 40 character by four line large format LCD display which will provides plenty of room for detailed operating instructions.

Card Reader
An insertion style card reader which captures ANSI track one and track two data. Has the ability to read and capture the customer's names as well as the account number. Capturing customer names allows for creation of customer lists that a business can use for marketing and promotions.

Thermal Receipt Printer (60 mm)
Prints 40 column receipts which contain all of the pertinent information including date, time, amount, gallons, fuel type, customer name and total amount of the sale. Thermal technology provides increased reliability and makes changing paper rolls fast and easy.

Unit Construction
Constructed of sturdy rolled steel with a single tumbler lock to provide protection for the enclosed computer equipment. Zinc plated with a tough powder coat finish ensures that the terminal will look good for years to come. Terminal Face with the ability to add custom graphics such as company logos.

Additional Safety Features
Custom safety features may be displayed prior to allowing fueling. These can be configured to have a customer acknowledge the statement prior to proceeding.

Keypad
Rugged membrane style numeric and advanced keypad. Advanced keypad allows for selection of fuel type by using color-coded keys. The keypad must support selection of authorized amount by either dollars, gallons or fill-up mode, and allows for tailor registration number entry.

Standard Hardware Features
Dimensions
Terminal top: 23" w x 9.5" h x 14.5"
Height with pedestal: 48.5"

Power Requirements
110 VAC 60 Hz, 200 Watts

OperatingTemperatures
-40°F to + 130°F

Hose Control Capability
Standard system controls two hoses; expansion kits available for additional hoses.

Pulser Compatibility
Able to handle pulser resolutions from 1: 1 to 1000: 1

Host Computer Requirements
150 MHz or better Pentium class PC with modem; 128 MB RAM; Windows 98, SE or newer; hard drive with 50 MB free space recommended.

Dispensers
Designed to work with new or existing mechanical or electronic registers.

Credit Card Processing
MasterCard, VISA, American Express & Discover
The software package allows you to transmit daily sales to a national processing firm, which deposits the funds directly into a designated bank account. Deposits are available in two business days.

Oil Company / Private Cards
Will accept all oil company aviation cards as well as private issue cards.

Fuel Management Software Package
Fuel management software package runs on a PC and is used to set prices, perform unit configuration and retrieve sales activity from the automated fueling terminal.

The fuel management software to allow user to use a PC to communicate with the automated fueling terminal and generate a number of productivity and business activity reports.

Fuel Management Software Specifications

- **Account management**
- **Single Click Invoicing**
- **Account Detail**
- **Basic Discounting**
- **Ability to Block Fuel Types for Customers to Prevent Mis-Fueling**
- **Access Schedules**
- **Ability to Remotely Retrieve Sales Activity**
- **Purchases**
- **Displays Detailed Sales Activity**
- **Transaction Detail Log**
- **Transmission of Terminal Configuration**
- **Ability to Send Customer Accounts to Terminal**
- **Remote Batch Close**
- **Auto Sales Retrieval Schedules**
- **Tail/Registration Number Entry**
- **Fuel Inventory Management**
- **Tank Levels**
- **Inventory Tolerances**
- **Tax Tables**
- **Audit Trail**
- **Ability to Provide Tiered Volume Discounting for Preferred Customers**
- **Accounting Gateway**
- **Accepts Private Issued Cards**
- **Sales Summary For Fuel Sold, Net Sales & Gross Profit**
- **Ability to Customize Customer Receipts**
- **Ability to Analyze Sales by Customer Activity, Region & Transaction Type**
- **Advanced Filters to View Transactions by Date, Customer Name, Fuel Type, Card Type or Processing Status**
- **Ability to Customize Display Messages at Terminal**

ATTACHMENT 13

QT TECHNOLOGIES, MULTIDISPLAY SPECIFICATION

QT TECHNOLOGIES

MultiDisplay™

NEW! High Visibility Display for Self-Service Fueling

Using integrated circuit technology with no moving parts, this reliable display can be seen from long distances.

Allows customers to monitor their fueling transaction from their aircraft or boat without having to continually walk to fueling equipment!

Features:

- Rugged Aluminum Case with Powder Coated Finish
- Overall Dimensions: 20” High, 16“ Wide, 4” Deep
- Temperature: - 30℃ to 70℃
- Solid State 3” Bright Red LED Digits - Visible from up to 100 Feet Away
- Flexible Mounting Arrangements - Communicates up to 2000 Feet Away from Self-Service Terminal
- Will Display Readouts for any Active Dispenser
- Multiple Dispensers Supported (Each Display Supports One Dispenser)
- Modular Design for Easy Installation and Maintenance
- Complete Installation Instructions

303.962.3413 www.QTTechnologies.com

© Copyright 2008 QT Technologies, LLC

QT TECHNOLOGIES

MultiDisplay™
Installation Instructions

QT MultiDisplay™:
The MultiDisplay uses integrated circuit technology with no moving parts, this reliable counter displays gallons / liters, dollars and total price, meeting NIST and state requirements as an Auxiliary Display. It is not intended to be used as a replacement for the Primary Register on your fueling meter. The bright, non-glare red LED lenses makes it easy to see for hundreds of feet, both day and night.

Table of Contents

General Information 3
- Specs / Parts List 3
- Tools Needed: 3
- Technical Support 3

Terminal Code Upgrade 4
Location of the MultiDisplay Unit 4
Install the power supply 6
Wiring 7
SiteMinder Setup 8
Diagrams 11
Mounting Brackets 12

MultiDisplay
Installation Instructions

General Information

Specs / Parts List

- MultiDisplay Unit
- Mounting Bracket
- Power Supply
- Ribbon Cable
- 4 conductor cable
- 4 wire nuts

Tools Needed:

- Medium Phillips screwdriver
- Small standard screwdriver
- Wire stripper

Technical Support

- Call 1-(303) 444-3590
    - Press 2 if out of service
    - Press 3 for non-emergency

MultiDisplay
Installation Instructions

Terminal Code Upgrade

Please perform the terminal code upgrade following the steps in the document titled **Manually Upgrading M3000 Terminal Code** before proceeding with this installation. **Be sure to return the DS1250 memory chip for credit.**

Location of the MultiDisplay Unit

Install the MultiDisplay Unit at a location visible to your customers.

The MultiDisplay is a simple apparatus consisting of a combination of components and electronic circuitry which can be installed outside or above Class 1 Division 2. It is a non-sparking low temperature device containing passive optoelectronic LEDs, and is incapable, under normal working conditions, of causing ignition of a flammable gas-air, vapor-air or dust-air mixture due to arcing or thermal means. It is an enclosed apparatus and does not contain any moveable parts, switches, sliding contacts, motors, generators, hot metals, batteries, fluorescent or incandescent lights. Therefore we advise that the MultiDisplay can be considered as a nonincendive, simple apparatus for installation outside or above Class 1 Division 2. **Refer to the NEC 511-7: Equipment Above Class 1 Locations, as well as your local jurisdiction for all equipment installations.**

Refer to the NEC (National Electrical Code) Figure 514-2 diagram below.
Class I Division II is the shaded area that is from 0 to 18 inches above the ground encompassing the fuel dispensing equipment in a 20 foot diameter surrounding the dispensing area as well as 18 inches around all sides of the actual dispensing equipment.

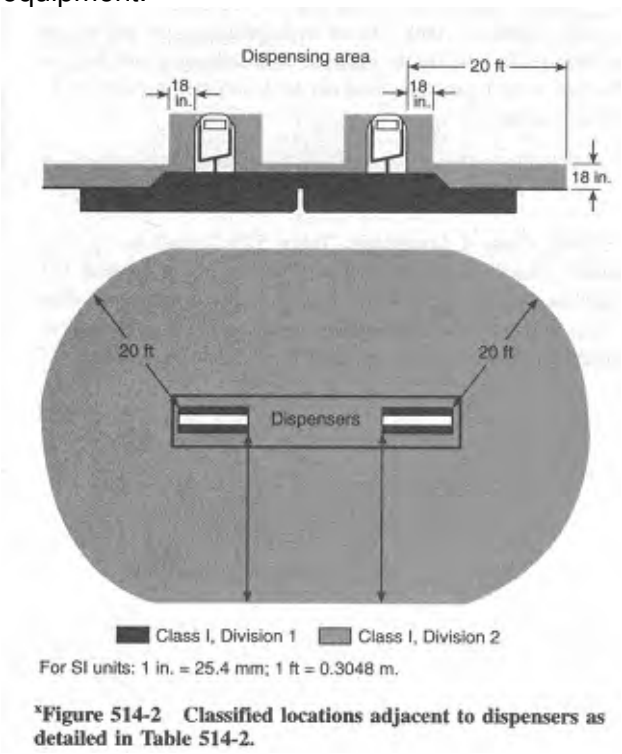

[x]Figure 514-2 Classified locations adjacent to dispensers as detailed in Table 514-2.

Figure — NEC Diagram for Informational Purposes only

MultiDisplay
Installation Instructions

Mount the connected junction box and run conduit (if necessary) from it to the QT Technologies terminal. If conduit is run, a four conductor shielded cable will have to be installed from the junction box to the QT Technologies terminal.

Use the supplied wire-nuts to make these connections inside the junction box.

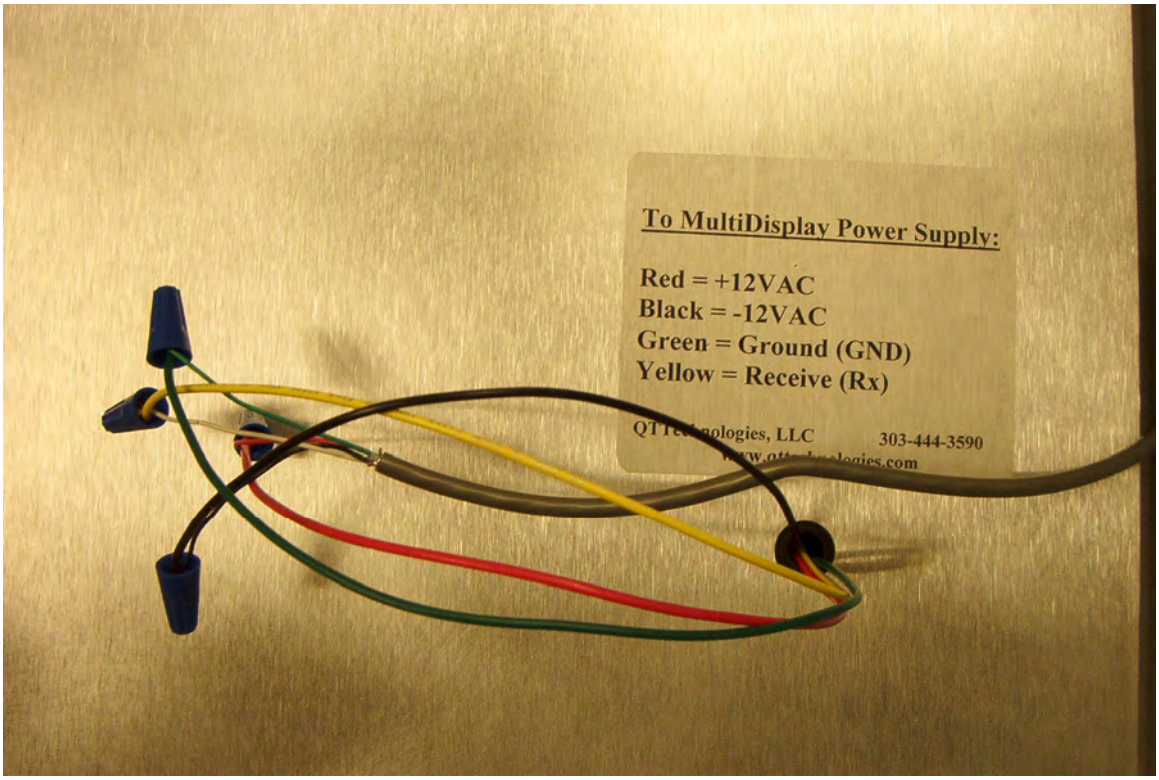

Wire-Nut Connections

Refer to NEC 511-6 Wiring in Spaces Above Class 1 Locations:

a) All fixed wiring above Class I Locations must be in metal raceways, rigid nonmetallic conduit, electrical nonmetallic tubing, flexible metal conduit, liquid tight flexible metal conduit or liquid tight flexible nonmetallic conduit.

MultiDisplay
Installation Instructions

Install the power supply

The MultiDisplay Unit power supply will mount on the left hand side of the upper pedestal area. The ribbon cable will be routed into the top, and connected to either COM0 or COM1 located near the top right side of the AT5 motherboard. The black and white twisted wires will be connected to the black and white wires going to the head.

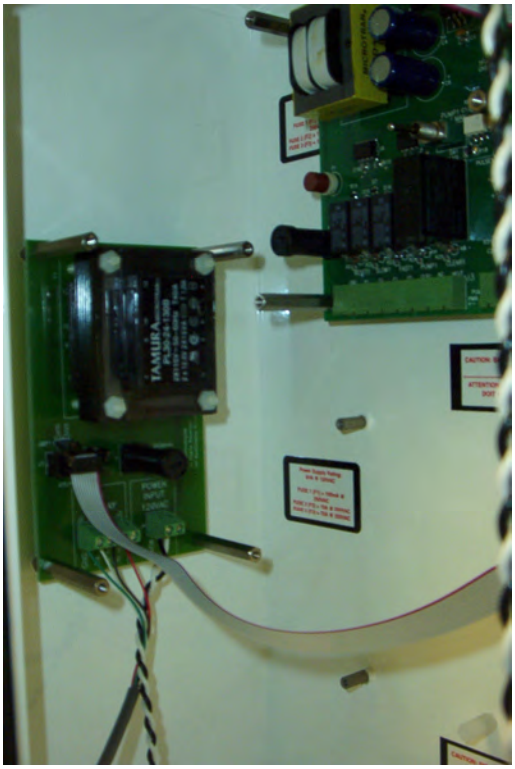

Power Supply mounted in Pedestal

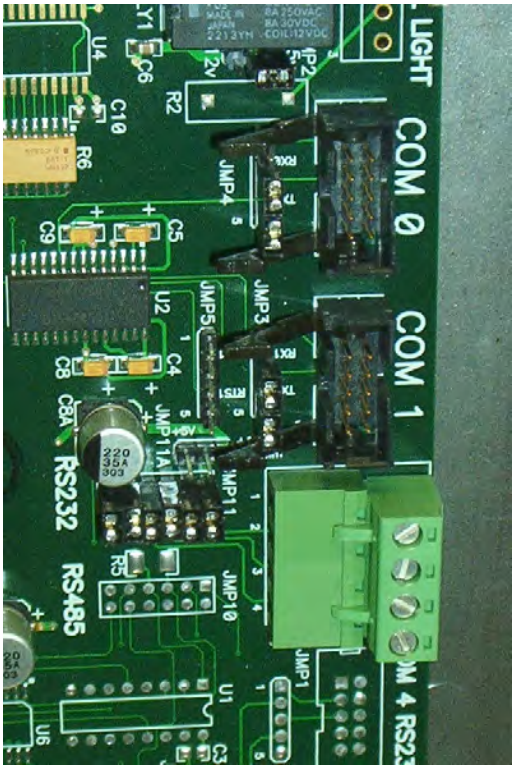

Com Ports on AT5 Motherboard

MultiDisplay
Installation Instructions

Wiring

The wires from the MultiDisplay Unit itself will need to be connected to the power supply mounted inside the pedestal. The red wire will go to the 12 VAC + and the black wire will go to 12 VAC -. The green wire will go to GND, and the yellow wire will go to RCV. If you are installing more than one MultiDisplay Unit, the four wires for each one will be connected in the same manner.

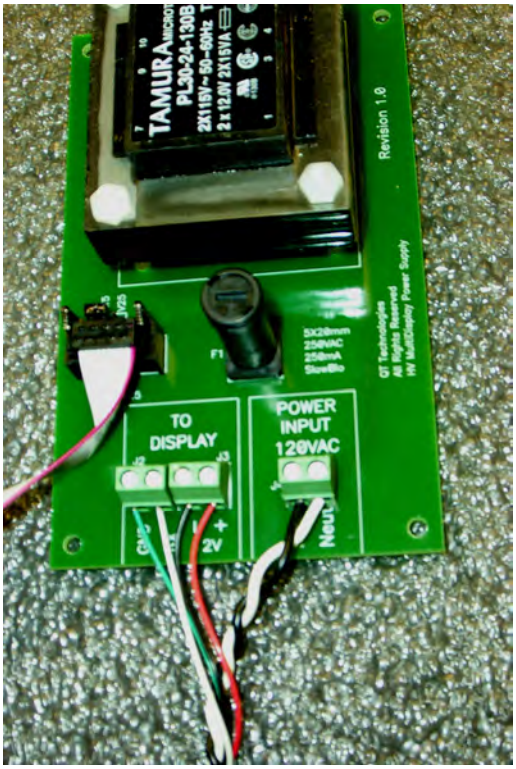

Power Supply Connections

MultiDisplay
Installation Instructions

SiteMinder Setup

Configure Siteminder for the Multi Display Unit.

Click on Edit > Fuel Terminal > Configuration. Click on the COMM PORTS tab, and select the correct communications port.

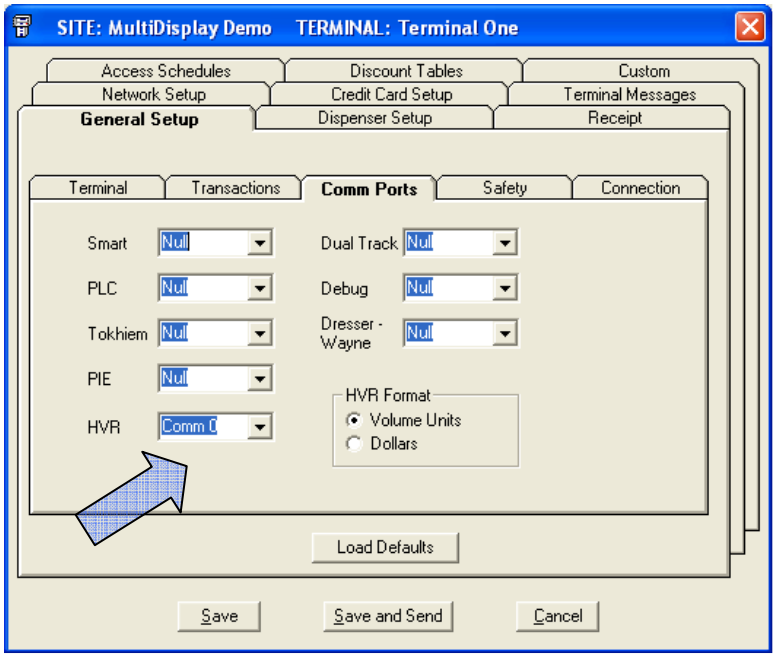

MultiDisplay
Installation Instructions

For single MultiDisplay Unit installations, the HVR Display Number will be 1.

Click on the Dispenser Setup tab to set this address.

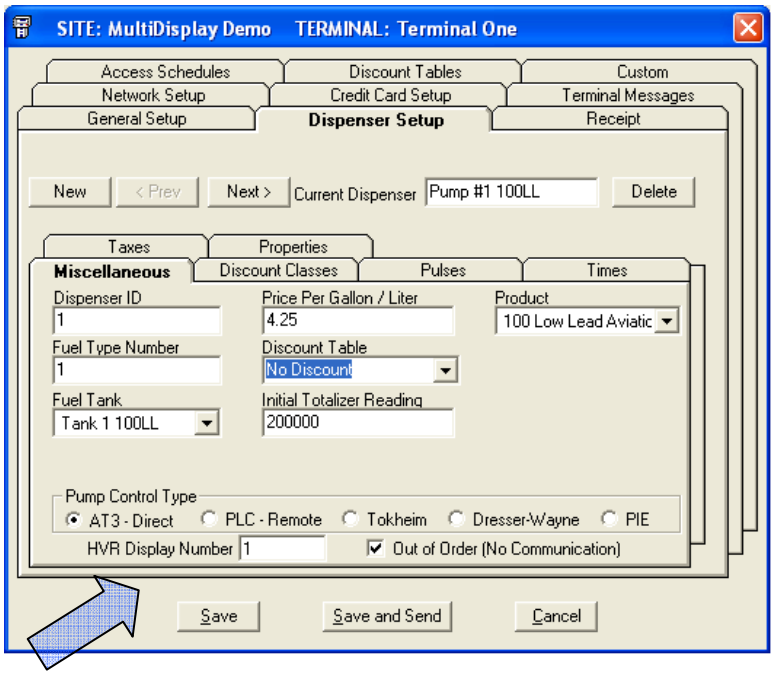

If you have multiple MultiDisplay Units for displaying transaction information for two or more dispensers, you will have to setup each MultiDisplay Unit with its own address, and put the address in the HVR Display Number box.

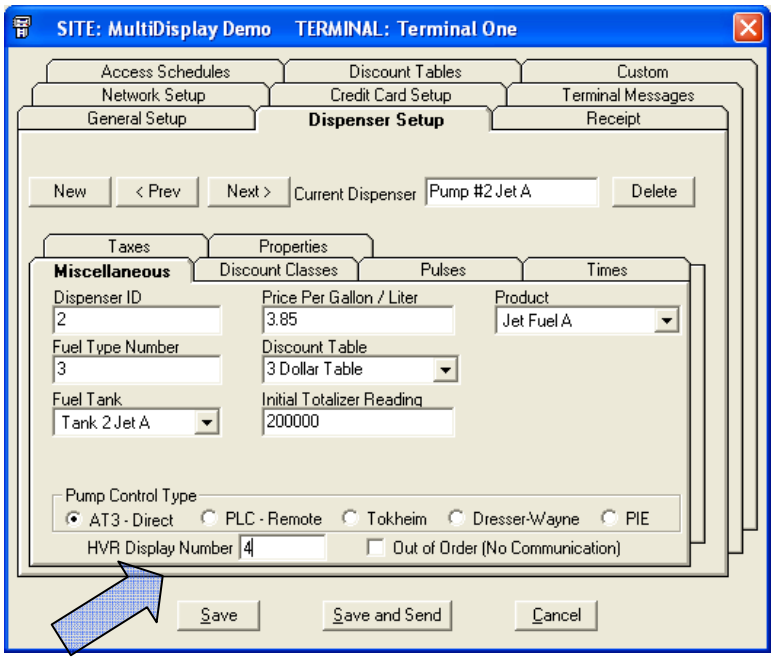

The second MultiDisplay Unit's address would be 4, as shown here.

MultiDisplay
Installation Instructions

To ensure correct configuration, you must make an entry in the Custom tab.

Click in the text box, and enter the following text exactly as shown here:

[GENERAL]
HVR_FORMAT=3

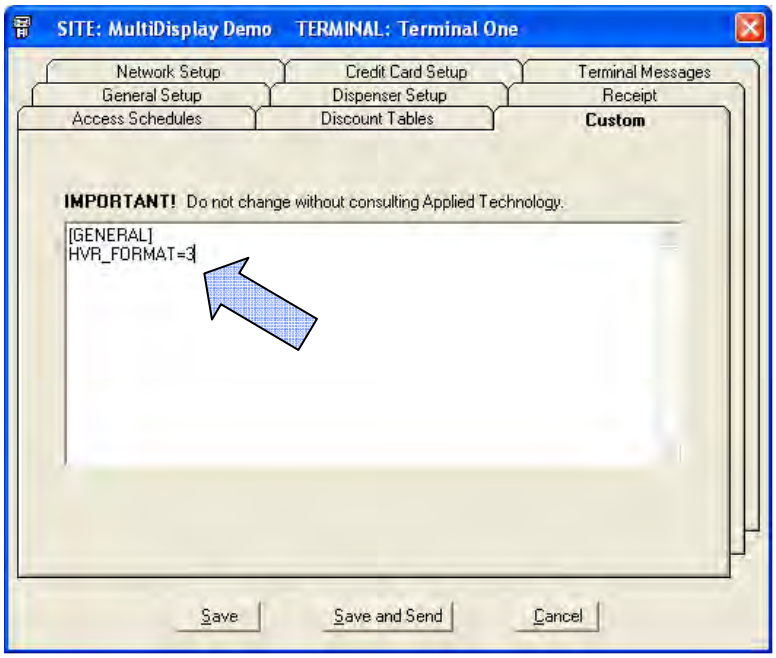

This instructs the terminal to send data for a 3 line MultiDisplay Unit.

NOTE: If this entry is missing, or not typed exactly as shown above, the unit **will not function.**

MultiDisplay
Installation Instructions

Diagrams

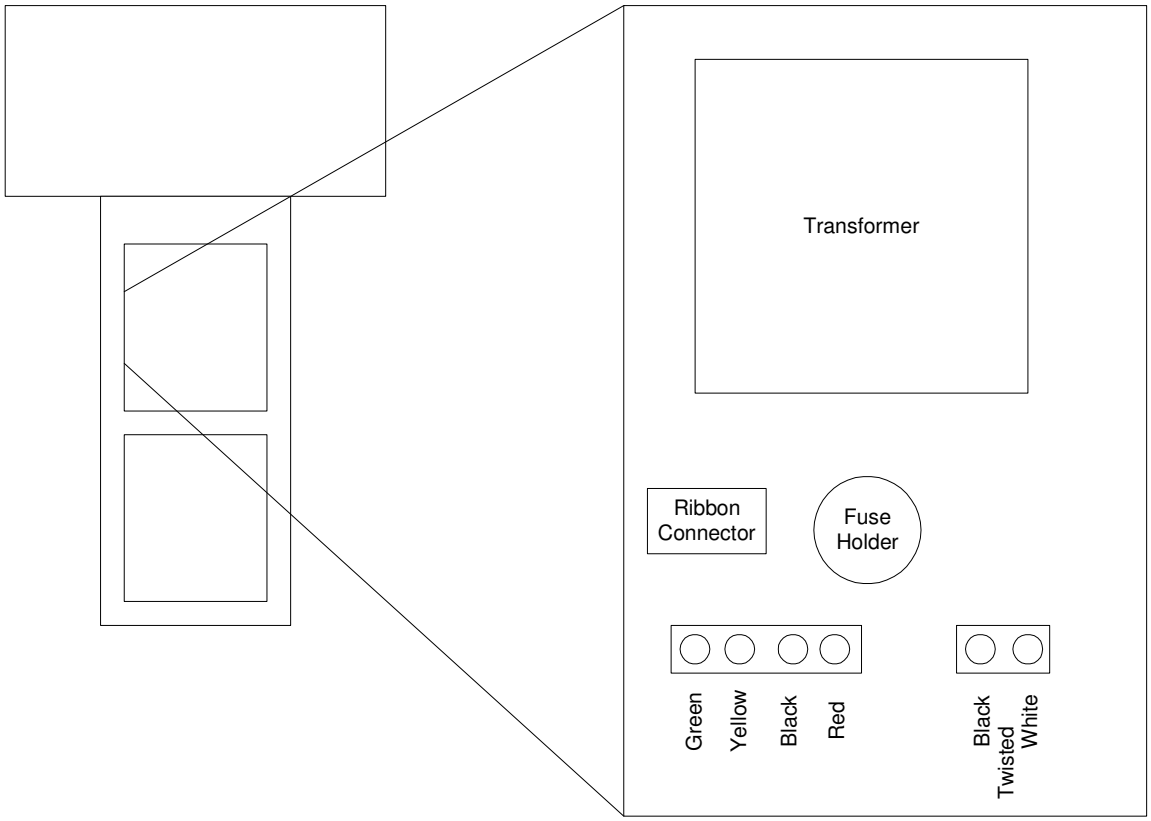

Power Supply Diagram

MultiDisplay
Installation Instructions

Mounting Brackets

Top or Bottom Bracket Mount

Side Mount

Back Mount

ATTACHMENT 14

MODERN WELDING, TYPICAL 12,000-GALLON ABOVEGROUND STORAGE TANK SPECIFICATION

FIREGUARD®

FIRE-RATED ABOVEGROUND TANKS

U.S. Patent #5695089 & #5809650

modern®

MODERN WELDING CO., INC.
1 800 922 1932
www.modweldco.com

UL 2085 Protected AST

FIREGUARD®

The New Generation of fire-rated AST's, going far beyond those "first generations" tanks which were merely enclosed in concrete.

- Fireguard® was the first AST of its design to obtain a UL Listing for secondary containment.
- Fireguard®'s secondary containment can be tightness tested on-site with standard testing procedures!
- Fireguard®'s exterior steel wall provides superior weatherability and low-cost maintenance. Unlike concrete, cracking or spalling will never be a problem!
- Fireguard®'s unique thermal insulating material is 75% lighter than concrete... Shipping, installation and relocation costs are reduced!
- The Fireguard® technology is patented under U.S. Patent #5695089 and #5809650 for "Lightweight Double Wall Storage Tank."

Lightweight thermal insulation

- Unique feature that helped Fireguard® exceed the UL 2-hour fire test
- Sufficiently porous to facilitate quick emergency venting and/or leak detection

Is Your Aboveground Tank Everything It's Cracked Up To Be?

FIREGUARD®	VS.	Concrete Encased
• Secondary containment is testable on-site using standard, economical testing procedures. • Fireguard®'s steel outer wall provides low-cost maintenance and protects the insulation material from weathering. • An average 12,000 gallon Fireguard® weighs under 30,000 pounds - well within the legal load limit for trucking.		• The secondary containment on certain designs may require elaborate and expensive procedures to be tested on-site. • Exposed concrete outer wall is susceptible to cracking, spalling and weathering - problems that are expensive to correct and are usually not covered by warranty. • An average 12,000 gallon concrete-encased tank weighs upwards of 100,000 pounds - imagine the hassles involved in handling that tank.

FIREGUARD®: THE ONLY TANK THAT MEETS ALL OF THESE STANDARDS

- UL-2085 Listed "Protected" Aboveground Tanks for Flammable and Combustible Liquids
- Both inner and outer tanks built per UL-142 Standard for Steel Aboveground tanks for Flammable and Combustible Liquids
- Uniform Fire Code, "Protected Tank"
- UL-2080 Listed "Fire Resistant" Tanks for Flammable and Combustible Liquids
- NFPA 30 and 30A, National Fire Protection Association
- NFPA 1, Uniform Fire Code™, of the National Fire Protection Association, "Protected Aboveground Tank
- Steel Tank Institute (STI) Standard F941 for Thermally Insulated Aboveground Storage Tanks
- International Fire Code (IFC)
- ULC-S655 Underwriters Laboratories of Canada Standard for Aboveground Tanks for Flammable and Combustible Liquids
- Other Standards…
- Ballistics protection per UL-2085
- Vehicle impact protection per UL-2085
- Hose Stream tested per UL-2085
- California Air Resources Board (CARB) testing requirements for air emissions
- Many fire codes and environmental regulations will accept Fireguard® Secondary Containment Tanks as an alternate to diking requirements

If your project is required to follow NFPA 30 or 30A guidelines... Check with your area "Authority Having Jurisdiction" related to maximum allowable tank capacity for the class fuel being stored and secondary containment requirements.

FIREGUARD® SPECIFICATIONS			
CYLINDRICAL DESIGN			
SAMPLE OUTER TANK DIMENSIONS			
ALL DIAMETERS AND LENGTHS ARE NOMINAL			
GALLONS	DIAMETER	LENGTH	APPROX WEIGHT (lbs.)
186	48	54	2,119
250	48	68	2,513
300	50	72	2,821
500	54	70	2,413
560	54	78	2,606
1,000	54	134	5,338
1,000	70	78	5,005
1,500	70	114	6,537
2,000	70	150	8,309
2,500	70	186	9,644
3,000	70	222	10,979
4,000	78	233	13,523
4,000	90	175	14,072
5,000	79	290	18,998
5,000	103	169	17,149
6,000	79	347	21,961
6,000	103	199	19,206
8,000	103	259	23,319
10,000	103	331	28,256
12,000	103	391	32,370
15,000	127	313	35,821
20,000	127	415	44,506
25,000	127	517	55,891
30,000	127	619	64,575

Please note that all dimensions and weights are approximate. Individual tanks may vary from these values.

FIREGUARD® SPECIFICATIONS				
RECTANGULAR DESIGN				
SAMPLE OUTER TANK DIMENSIONS				
ALL DIAMETERS AND LENGTHS ARE NOMINAL				
GALLONS	LENGTH	WIDTH	HEIGHT	APPROX. WEIGHT (lbs.)
186	45	45	56	2,256
250	118	37	37	3,305
250	79	51	37	2,916
500	141	52	37	4,991
750	93	73	37	3,950
1,000	128	73	37	4,607
1,000	89	73	51	4,102
1,500	125	89	45	5,772
2,000	141	87	51	6,679
2,000	141	73	61	6,486
2,500	141	89	61	7,453
3,000	251	73	51	11,572
3,000	118	103	73	9,379
4,000	332	73	51	14,990
4,000	155	103	73	11,640
5,000	337	73	61	16,615
5,000	192	103	73	13,901
6,000	403	73	61	19,631
6,000	229	103	73	16,162
8,000	371	103	61	22,872
8,000	303	103	73	20,684
10,000	461	103	61	27,992
10,000	377	130	73	25,205
12,000	452	103	73	29,788
15,000	387	103	103	38,510
18,000	463	103	103	45,290
24,700	466	138	103	54,539

MODERN WELDING CO., INC.

Corporate Offices

2880 New Hartford Road • Owensboro, KY 42303
Phone: 270-685-4400 • Fax: 270-684-6972
www.modweldco.com • E-mail: modern@modweldco.com

Modern Welding Company of Ohio, Inc.
One Modern Way, Newark, Ohio 43055
Phone: (740) 344-9425 Fax: (740) 344-6018
modern5@modweldco.com

Modern Welding Company of Iowa, Inc.
2818 Mt. Pleasant Road, Burlington, Iowa 52601
Phone: (319) 754-6577 Fax: (319) 754-8428
modern8@modweldco.com

Modern Welding Company of Georgia, Inc.
300 Prep Phillips Drive, Augusta, Georgia 30901
Phone: (706) 722-3411 Fax: (706) 724-8133 (Fax)
modern14@modweldco.com

Modern Welding Co. of Owensboro, Inc.
1450 E. Parrish Ave., Owensboro, Kentucky 42303
Phone: (270) 683-5323 Fax: (270) 684-5245
modern1@modweldco.com

Modern Welding Co. of Florida, Inc.
1801 Atlanta Ave., Orlando, Florida 32806
Phone: (407) 843-1270 Fax: (407) 423-8187
modern6@modweldco.com

Modern Welding Co. of Texas, Inc.
715 Sakowitz St., Houston, Texas 77020
Phone: (713) 675-4211 Fax: (713) 673-4062
modern7@modweldco.com

Modern Welding Co. of Texas, Inc.
200 N. Main St., Rhome, Texas 76078
Phone: (817) 636-2215 Fax: (817) 636-2680
modern15@modweldco.com

Modern Welding Co. of California, Inc.
4141 N. Brawley Ave., Fresno, California 93722
Phone: (559) 275-9353 Fax: (559) 275-4381
modern10@modweldco.com

Modern Welding Company Inc.Web Posted 2/09

ATTACHMENT 15

TNEMEC 61 EPOXY COATING SPECIFICATION

TNEME-LINER SERIES 61

PRODUCT PROFILE

GENERIC DESCRIPTION Cycloaliphatic Amine Epoxy

COMMON USAGE Tightly cross-linked epoxy with excellent corrosion and chemical resistance. Principally used for immersion service, including fuel and crude oil storage, chemical containment and wastewater treatment.

COLORS 5001 Gray and 5002 Beige

FINISH Semi-gloss

SPECIAL QUALIFICATIONS A two-coat system of Series 61 at 4.0 to 6.0 dry mils (100-150 dry microns) per coat passes the performance requirements of **MIL-PRF-4556F.**

PERFORMANCE CRITERIA Extensive test data available. Contact your Tnemec representative for specific test results.

COATING SYSTEM

PRIMERS **Steel:** Self-priming
Concrete: Self-priming or Series 215, 217, 218
CMU: Series 215, 218

TOPCOATS **Note:** Series 61 can be topcoated with select Tank Armor linings depending on service conditions. Contact Tnemec Technical Service for recommendations.

SURFACE PREPARATION

STEEL **Immersion Service:** SSPC-SP10/NACE 2 Near-White Blast Cleaning obtaining a minimum angular anchor profile of 2.0 mils (50 microns).

CONCRETE Allow new concrete to cure for 28 days. Abrasive blast referencing SSPC-SP13/NACE 6, ICRI-CSP3-5 Surface Preparation of Concrete and Tnemec's Surface Preparation and Application Guide.

ALL SURFACES Must be clean, dry and free of oil, grease and other contaminants.

TECHNICAL DATA

VOLUME SOLIDS 82.0 ± 2.0% (mixed) †

RECOMMENDED DFT 1. For JP-4, JP-5, JP-8, Aviation Gas and Jet A-1: 4.0 to 6.0 mils (100 to 150 microns) per coat (minimum of two coats).
2. Most Other Applications: 8.0 to 12.0 mils (205 to 305 microns) per coat (minimum of two coats). Contact your Tnemec representative for specific recommendations.

CURING TIME

Temperature	To Handle	To Recoat	Immersion
75°F (24°C) at 4.0 mils (100 microns)	6 hours	16-18 hours•	5 to 7 days
75°F (24°C) at 12.0 mils (305 microns)	11 hours	16-18 hours•	5 to 7 days

Curing time varies with surface temperature, air movement, humidity and film thickness.
• Maximum recoat time is 72 hours. If more than 72 hours have elapsed between coats, the coated surface must be scarified before topcoating.

VOLATILE ORGANIC COMPOUNDS EPA Method 24
Unthinned: 0.36 lbs/gallon (45 grams/litre)
Thinned 6%: 0.71 lbs/gallon (85 grams/litre)
Thinned 10%: 1.21 lbs/gallon (145 grams/litre) †

HAPS **Unthinned:** 1.53 lbs/gal solids
Thinned 10%: 2.42 lbs/gal solids

THEORETICAL COVERAGE 1,315 mil sq ft/gal (32.3 m²/L at 25 microns). See APPLICATION for coverage rates. †

NUMBER OF COMPONENTS Two: Part A (amine) and Part B (epoxy)

MIXING RATIO By volume: One (Part A) to one (Part B)

PACKAGING

	PART A	PART B	Yield (mixed)
Large Kit	5 gallon pail (18.9 L)	5 gallon pail (18.9 L)	10 gallons (37.85 L)
Small Kit	1 gallon can (3.79 L)	1 gallon can (3.79 L)	2 gallons (7.57 L)

NET WEIGHT PER GALLON 13.10 ± 0.25 lbs (5.94 ± .11 kg) †

STORAGE TEMPERATURE Minimum 20°F (-7°C) Maximum 110°F (43°C)
For optimum application properties, material temperature should be above 60°F (16°C) prior to application.

TEMPERATURE RESISTANCE (Dry) Continuous 250°F (121°C) Intermittent 275°F (135°C)
Performance in high temperature immersion applications depends on liquid media, temperature and substrate. Contact your Tnemec representative for more information.

SHELF LIFE 24 months at recommended storage temperature.

FLASH POINT - SETA Parts A & B: 81°F (27°C)

HEALTH & SAFETY Paint products contain chemical ingredients which are considered hazardous. Read container label warning and Material Safety Data Sheet for important health and safety information prior to the use of this product.
Keep out of the reach of children.

APPLICATION

© November 05, 2012 by Tnemec Co., Inc.

Published technical data and instructions are subject to change without notice. The online catalog at www.tnemec.com should be referenced for the most current technical data and instructions or you may contact your Tnemec representative for current technical data and instructions.

TNEME-LINER | SERIES 61

COVERAGE RATES

For JP-4, JP-5, JP-8
Aviation Gas, Jet A-1 Service

	Dry Mils (Microns)	Wet Mils (Microns)	Sq Ft/Gal (m²/Gal)
Suggested	5.0 (125)	6.0 (150)	263 (24.4)
Minimum	4.0 (100)	5.0 (125)	329 (30.6)
Maximum	6.0 (150)	7.5 (190)	219 (20.4)

Most Other Applications

	Dry Mils (Microns)	Wet Mils (Microns)	Sq Ft/Gal (m²/Gal)
Suggested	10.0 (255)	12.0 (305)	132 (12.2)
Minimum	8.0 (205)	10.0 (255)	164 (15.3)
Maximum	12.0 (305)	14.5 (355)	110 (10.2)

Allow for overspray and surface irregularities. Film thickness is rounded to the nearest 0.5 mil or 5 microns. Application of coating below minimum or above maximum recommended dry film thicknesses may adversely affect coating performance. †

MIXING

Power mix contents of each container, making sure no pigment remains on the bottom. Pour a measured amount of Part B into a clean container large enough to hold both components. Add an equal volume of Part A to Part B while under agitation. Continue agitation until the two components are thoroughly mixed. Do not use mixed material beyond pot life limits. **Note:** Both components must be above 60°F (16°C) prior to mixing. Mixing ratio is one to one by volume. A large volume of material will set up quickly if not applied or reduced in volume. **Caution: Do not reseal mixed material. An explosion hazard may be created.**

THINNING

Use No. 2 Thinner. For air spray, thin up to 10% or 12 oz (354 mL) per gallon. For airless spray or brush, thin up to 5% or 6 oz (177 mL) per gallon. **Note:** A maximum of 6% or 7 oz (207 mL) per gallon of No. 2 Thinner may be used to comply with VOC regulations.

POT LIFE

2 1/2 hours at 60°F (16°C) 1 1/2 hours at 77°F (25°C) 45 minutes at 100°F (38°C)

APPLICATION EQUIPMENT

Air Spray

Gun	Fluid Tip	Air Cap	Air Hose ID	Mat'l Hose ID	Atomizing Pressure	Pot Pressure
DeVilbiss JGA	E	765 or 704	5/16" or 3/8" (7.9 or 9.5 mm)	3/8" or 1/2" (9.5 or 12.7 mm)	60-90 psi (4.1-6.2 bar)	10-20 psi (0.7-1.4 bar)

Low temperatures or longer hoses require higher pot pressure.

Airless Spray

Tip Orifice	Atomizing Pressure	Mat'l Hose ID	Manifold Filter
0.015"-0.021" (380-535 microns)	3000-3800 psi (207-262 bar)	1/4" or 3/8" (6.4 or 9.5 mm)	60 mesh (250 microns)

Use appropriate tip/atomizing pressure for equipment, applicator technique and weather conditions.
Brush: Recommended for small areas only. Use high quality natural or synthetic bristle brushes. **Note:** Two or more coats may be required to obtain recommended film thicknesses.

SURFACE TEMPERATURE

Minimum 60°F (16°C) Maximum 135°F (57°C)
The surface should be dry and at least 5°F (3°C) above the dew point. Coating will not cure below minimum surface temperature.

CLEANUP

Flush and clean all equipment immediately after use with the recommended thinner, xylol or MEK.

† Values may vary with color.

WARRANTY & LIMITATION OF SELLER'S LIABILITY: Tnemec Company, Inc. warrants only that its coatings represented herein meet the formulation standards of Tnemec Company, Inc. THE WARRANTY DESCRIBED IN THE ABOVE PARAGRAPH SHALL BE IN LIEU OF ANY OTHER WARRANTY, EXPRESSED OR IMPLIED, INCLUDING BUT NOT LIMITED TO, ANY IMPLIED WARRANTY OF MERCHANTABILITY OR FITNESS FOR A PARTICULAR PURPOSE. THERE ARE NO WARRANTIES THAT EXTEND BEYOND THE DESCRIPTION ON THE FACE HEREOF. The buyer's sole and exclusive remedy against Tnemec Company, Inc. shall be for replacement of the product in the event a defective condition of the product should be found to exist and the exclusive remedy shall not have failed its essential purpose as long as Tnemec is willing to provide comparable replacement product to the buyer. NO OTHER REMEDY (INCLUDING, BUT NOT LIMITED TO, INCIDENTAL OR CONSEQUENTIAL DAMAGES FOR LOST PROFITS, LOST SALES, INJURY TO PERSON OR PROPERTY, ENVIRONMENTAL INJURIES OR ANY OTHER INCIDENTAL OR CONSEQUENTIAL LOSS) SHALL BE AVAILABLE TO THE BUYER. Technical and application information herein is provided for the purpose of establishing a general profile of the coating and proper coating application procedures. Test performance results were obtained in a controlled environment and Tnemec Company makes no claim that these tests or any other tests, accurately represent all environments. As application, environmental and design factors can vary significantly, due care should be exercised in the selection and use of the coating.

Tnemec Company Incorporated 6800 Corporate Drive Kansas City, Missouri 64120-1372 1-800-TNEMEC1 Fax: 1-816-483-3969 www.tnemec.com

© November 05, 2012 by Tnemec Co., Inc.