CITY OF HOUSTON
INVITATION TO BID

Issued: September 25, 2009

Bid Opening:
Sealed bids, in duplicate, will be received by the City Secretary of the City of Houston, in the City Hall Annex, Public Level, 900 Bagby, Houston, Texas 77002, until 10:30 a.m. Thursday, **November 5, 2009** and all bids will be opened and publicly read in the City Council Chamber, City Hall Annex, Public Level, 900 Bagby at 11:00 a.m. on that date for the purchase of:

AUTOMOBILES, VANS, UTILITY VEHICLES, AND LIGHT DUTY TRUCKS
FOR
VARIOUS DEPARMENTS
BID INVITATION NO. S34-N23423
NIGP: 071-06

Buyer:
Questions regarding this solicitation package should be addressed to**, Larry Benka, at 832-393-8727,** or e-mail to **larry.benka@cityofhouston.net**

Bidding forms, specifications, and all necessary information should be downloaded from the Internet at http://purchasing.houstontx.gov by registering and downloading this solicitation document, all updates to this solicitation document will be automatically forwarded via e-mail to all registered bidders. This information may also be obtained from the Supplier Assistance Desk, Strategic Purchasing Division, 901 Bagby, Concourse Level, Houston, Texas 77002.

Electronic Bidding:
In order to submit a bid for the items associated with this procurement, you must fill in the pricing information on the **"PLACE BID"** page.

Pre-Bid Conference:
A Pre-Bid Conference was held for all Prospective Bidders in the Strategic Purchasing Division, Conference Room #1, City Hall Basement Tunnel, City Hall, 901 Bagby, at **1:30 P.M.** on **October 08, 2009.**

All Prospective Bidders are urged to be present. It is the bidder's responsibility to ensure they have secured and thoroughly reviewed the solicitation documents prior to the Pre-Bid Conference. Any revisions to be incorporated into this solicitation document arising from discussions before, during and subsequent to the Pre-Bid Conference will be confirmed in writing by Letter(s) of Clarification prior to the bid due date. Verbal responses will not otherwise alter the specifications, terms and conditions as stated herein.

The place of the bid opening may be transferred in accordance with Paragraph (b), (5) of Section 15-3 of The Code of Ordinances, Houston, Texas. The bid opening meeting may be rescheduled in accordance with Paragraph (b), (6) of said Section 15-3.

The City reserves the right to reject any or all bids, or to accept any bid or combination of bids deemed advantageous to it.

City Employees are prohibited from bidding on this solicitation in accordance with the Code of Ordinances, Section 15 - 1.

*CONTENTS:

SECTION A: OFFER
SECTION B: SCOPE OF WORK/SPECIFICATIONS
SECTION C: GENERAL TERMS & CONDITIONS

***NOTE 1: Actual page numbers for each Section may change when the solicitation document is downloaded from the Internet or because of Letters of Clarification. Therefore, Bidders must read the bid document in its entirety and comply with all the requirements set forth therein.**

***NOTE 2: To be considered for award, please submit the electronic bid form and the forms listed in Section A, including the official signature page, which must be signed by a company official authorized to bind the company.**

INSTRUCTIONS for BIDDING and TERMS & CONDITIONS

NOTE: It is the policy of the City of Houston that a sealed, signed bid must be submitted to the City Secretary by the due date. After you submit your bid online, please print the online Official Bid Form and signature page, sign, and turn in to the City Secretary.

1. All bids must show the full name of the firm bidding and must be on the online Official Bid Form. Bids should be filed in duplicate and at least one copy of the online Official Bid Form must be manually signed in ink by an authorized officer of the company and their title must be shown. Obligations assumed by the signature must be fulfilled. **The bid number, title of the bid, and the bid due date must be shown on the front of the envelope(s) containing the Bid Form(s) when submitted to the Office of the City Secretary, Public Level, Room No. P101, City Hall Annex, 900 Bagby Street, Houston, TX 77002.**

2. **TIME AND DATE:** Bids **MUST** be in the Office of the City Secretary, City Hall Annex, Public Level, 900 Bagby, Houston, Texas 77002 at or before 10:30 A.M. on the day bids are due; an early postmark will not suffice. Be sure you have allowed ample time for postal delivery. **CAUTION**: Bids mailed on the day before bids are due may not be received in time to be considered.

3. **WITHDRAWAL OF BID OFFER**: If the bid has been submitted to the City Secretary, a bidder may withdraw its offer before the expiration of the time during which the offer may be submitted, without prejudice, by submitting a written request for its withdrawal to the City Secretary. The bidder should follow instructions listed on the Strategic Purchasing Division website to withdraw any bid submitted through the online bidding process.

4. The online Official Bid Form should indicate the Unit Price for the specified item(s). The Unit Price shall be inclusive of all costs, insurance and freight. **Cash discounts will not be considered in the award of bids.**

5. No change in price will be considered after bids have been opened.

6. Provisions of the City's online Official Bid Form, Specifications, and General Terms & Conditions shall not be altered. Any alteration of figures or terms may invalidate the bid on the item which the alteration is made. Submission or attachment of company "QUOTATION FORMS" containing alternative terms and/or conditions is not acceptable and may result in your bid being determined non-responsive.

7. If bidder wishes to submit more than one bid on the same item, separate online City Official Bid Forms for each bid, complete with its own original signature page, must be submitted both online and to the City Secretary.

8. All bids are for delivery not later than the time stated in the specifications, Prepaid F.O.B. Destination, the point of delivery stated in the Specifications and/or Bid Form.

9. Bidders are invited to be present at the opening of bids. After opening, bids may be inspected in the City Secretary's Office, City Hall Annex, Public Level, 900 Bagby, Houston, Texas 77002.

10. **Cost of Bid/Proposal Preparation** The City shall not reimburse the cost of developing, presenting or providing any response to this solicitation. Offers submitted for consideration should be prepared simply and economically, providing adequate information in a straightforward and concise manner.

SECTION A

FLEET FORMAL BID

AUTOMOBILES, VANS, UTILITY VEHICLES, AND LIGHT DUTY TRUCKS
FOR
VARIOUS DEPARTMENTS
BID INVITATION NO. S34-N23423
NIGP: 071-06

To the Honorable Mayor
and City Council Members
of the City of Houston, Texas (the "City")

The undersigned hereby offers to furnish and deliver prepaid F.O.B. destination point Houston, Texas, the item(s) listed on the **electronic bid form** and on individual Purchase Orders, in accordance with the price(s) bid and other conditions shown herein, and in accordance with the City's Specifications and General Terms & Conditions and/or samples/drawings provided herein. When issued by the City of Houston, Letters of Clarification shall automatically become part of this bid document and shall supersede any previous specifications or provisions in conflict with the Letters of Clarification. It is the responsibility of each bidder to ensure it has obtained all such Letters. By submitting a bid on this project, bidder shall be deemed to have received all Letters of Clarification and to have incorporated them into the bid.

The City may accept this bid offer by issuance of a Notice of Award Letter and/or a Purchase Order at any time on or before the 120th day following the day this Official Bid Form is opened by the City. This offer shall be irrevocable for 120 days after bid opening or for 90 days after City Council awards the bid, whichever comes last, but this period may be extended by written agreement of the parties.

The City reserves the option, after bids are opened, to adjust the quantities listed on the following page(s) upward or downward, subject to the availability of funds, and/or make award(s) on a line item basis.

The City reserves the right to INCREASE quantities during the twelve-month period following the issuance of the first purchase order subject to agreement in writing by the Prime Contractor/Supplier to honor the same bid price.

SECTION A

Documents/forms must be downloaded from the City's Website http://purchasing.houstontx.gov

Additional Required Forms to be Included with this Bid:

In addition to the electronic Bid Form and the Official Signature Page, the Forms listed in Table 1 **must be completed and submitted to the Office of the City Secretary on or before the date and time the bid is due:**

Table 1 - Required Forms
Affidavit_of_Ownership.doc
Fair_Campaign_Ordinance.doc
Statement_of_Residency.doc
Conflict_of_Interest_Questionnaire.doc
Bidders_Attachments_Fleet.doc

Table 2 lists other documents and forms that should be viewed/downloaded from the City's website, but are not required to be submitted with the bid. The City will request these forms, as applicable, to be completed and submitted to the City by the recommended/successful bidder:

Table 2 - Documents and Forms
Drug Form.doc
EEOC.doc
Equipment_Inspection_&_Receiver.doc
MWBE.doc

SECTION B

SPECIFICATIONS

PART I
GENERAL SPECIFICATIONS

1.0 SCOPE:

1.1 This specification covers automobiles, vans, utility vehicles, pickup trucks and light-duty cabs & chassis and bodies required by the various departments of the City of Houston.

1.2 The term of this agreement shall commence on the date City Council approves issuance of purchase orders pursuant to this Bid and shall continue for the twelve-month period following the issuance of the first purchase order subject to agreement in writing by the Prime Contractor/Supplier to honor the same bid price. During this period, purchase orders will be issued for these items as needed. It is emphasized that the City of Houston does not guarantee any quantities; rather, the quantities may vary depending upon the actual needs of the various city departments.

1.3 Prime Contractor/Supplier shall be responsible for fulfilling all purchase orders pertaining to each series for which a manufacturer build-out/order deadline has not been provided in accordance with the requirements listed below.

1.3.1 Prime Contractor/Supplier(s) shall furnish the Strategic Purchasing Division with order deadlines in writing a minimum of three weeks before the order deadline.

2.0 APPLICABLE SPECIFICATIONS:

2.1 The applicable specifications are comprised of the "Instructions for Bidding and Terms & Conditions", "Official Bid Forms", the "General Specifications", the "Technical Equipment Specifications", the "General Terms and Conditions", and other specifications that may be included herewith and the purchase orders which refer to these specifications.

2.2 LEV Vehicles:

2.2.1 All Low Emission Vehicles (LEV) must meet or exceed the Federal Low Emission Vehicle Certification.

2.3 **E85 FLEX FUEL ENGINES**: All vehicles are to be delivered with E85 Flex fuel engines if available from OEM at no additional cost to dealers.

3.0 BIDDING:

3.1 Pricing for Vehicles:

3.1.1 Bidders may bid on one or more of the vehicle series.

3.1.2 Bids containing limitations on the minimum or maximum number of vehicles to be purchased may not be considered in some cases.

3.1.3 A bid on any vehicle series must contain a Vehicle Unit Price for the vehicle. Bids that contain unit pricing for the vehicle options only will be deemed as non-responsive and will not be considered.

3.1.4 The Vehicle Unit Price for any specified vehicle shall be defined as the price for the manufacturer's standard model, furnished complete with all standard equipment and factory installed accessories listed in the manufacturer's printed literature for the respective unit, and any additional equipment defined herein by the City of Houston that is to be included in the Vehicle Unit Price.

3.2 Pricing for Specified Options:

3.2.1 A Option Unit Price is required on every listed option for the vehicle series on which bidder is submitting a bid.

3.2.2 If a bidder "no bids" any option for which bids are requested in a particular vehicle series, and the option is available, the bid for that vehicle series will be deemed as non-responsive and will be rejected.

3.0 BIDDING (Continued):

3.3 Special Bidding Instructions:

3.3.1 A bidder, by affixing its signature on the Official City Bid Form, has offered to furnish the vehicles and equipment as specified herein in accordance with these specifications and all provisions set forth in this bid document. As such, it is the bidder's responsibility to adhere to these specifications. **No exception or deviation to the published specifications will be accepted.**

3.3.2 It is the intent of the City of Houston to purchase the vehicle identified in a particular Series. For example, if the City requests a bid for the Series 353A, Compact Automobile, a model substitution normally purchased under Series 360B, Intermediate Automobile, is not acceptable.

3.3.3 In the official e-bid form, if the bidder intends not to submit a bid for a vehicle series or any option listed for that vehicle series, bidder shall check the "No Bid" Box.

3.3.4 In the official e-bid form, in the option unit price column, bidder should indicate by "$00.00" for optional equipment that is requested but is included as standard equipment by the manufacturer, or offered by the bidder at no charge.

3.3.5 Throughout these specifications, compatibility is of the essence and any modification, accessory, device, material or type of construction, whether to existing or to the specified equipment, which may be necessary to incorporate the specified equipment into the existing equipment shall be considered to be a part of these specifications whether detailed by item or not.

3.4 **FIRM PRICING: Prices quoted shall remain firm through delivery and shall not be subject to increases (or supplemented on Prime Contractor/Supplier's invoice(s) for payment) throughout the term of this agreement or mutually agreed upon extension.**

3.5 The City may accept this bid offer by issuance of a Notice of Award Letter and/or a Purchase Order covering award of bid to the Prime Contractor/Supplier at any time on or before the 120th day following the day the Official Bid Form is opened by the City. This offer shall be irrevocable for 120 days after bid opening or for 90 days after City Council awards the bid, whichever comes last, but this period may be extended by written agreement of the parties.

4.0 METHOD OF AWARD:

4.1 Awards will be made on the basis of the low total bid price, which includes Total Vehicle Price and Total Option Price(s) for each particular line item vehicle series meeting all specifications referenced herein.

5.0 NEW MODELS:

5.1 All vehicles and items proposed shall be new, manufacturer's latest make and model in current production at the time of delivery, as offered to commercial trade and shall be furnished complete with all factory-installed standard equipment and accessories listed in the manufacturer's latest literature for the respective unit and any additional optional equipment as may be defined in the detailed Technical Specifications, with such exception as may be described in the detailed specifications.

6.0 MAKES, MODELS AND LITERATURE:

6.1 Manufacturer's name, trade names, name of models, etc., may be listed in these specifications for the sole purpose of describing items that are considered as being reasonably satisfactory for the intended uses.

6.2 Technical literature may be provided with the bid submittal but is not required. However, the City reserves the right to request and require literature and/or clarifications, as needed, after bid submittal. To evaluate the bids, the user department and the City purchasing staff may require product literature/specification sheets. If required, Bidder must submit a minimum of ONE SET of the requested catalogue information, and/or descriptive literature. Bidder(s) shall furnish the requested literature within seven (7) calendar days after the receipt of the City's written request. FAILURE ON BIDDER'S PART TO FURNISH THE REQUESTED TECHNICAL DATA IN THE TIME LIMIT SPECIFIED MAY BE CAUSE FOR REJECTION OF THE BID.

7.0 VEHICLES, EQUIPMENT AND ACCESSORIES:

7.1 All units to be furnished shall be standard models as distinguished from deluxe or custom models unless otherwise clearly specified in the detailed specifications. Body styles will be identified in the detailed specifications. Vehicles shall be delivered to the City installed with all standard equipment and accessories as listed in the manufacturer's latest printed literature, with such exception as may be described in the detailed specifications. Vehicles shall comply with all Federal Motor Vehicle Safety Standards and State of Texas Safety Regulations applicable to the specified vehicle on the date of manufacture. Any equipment or accessories requested shall be factory-installed and shall be as represented in the manufacturer's current technical data. If any item is not available as factory-installed, then dealer-installed equipment may be substituted for that item. Any components removed from the vehicles for dealer-installed optional equipment shall remain the property of the City of Houston and shall be provided with the delivery of the completed vehicle.

8.0 OPTIONAL BODIES AND OTHER EQUIPMENT:

8.1 The successful Prime Contractor/Supplier will be responsible for installing optional bodies and/or special equipment to the cabs and chassis and delivering the completely assembled units to the designated delivery point. All components removed from the cabs and chassis in order to install optional bodies and/or special equipment shall remain the property of the City of Houston and shall be provided with the delivery of the completed vehicle.

9.0 PRIME CONTRACTOR/SUPPLIER ADVERTISING:

9.1 Contractors/Suppliers shall not place any decal, plate, sign, stencil, stamping, molding, or marking of any type pertaining to advertisement other than trademarks, trade names, or model designation normally installed by the manufacturer on automotive equipment, either automobile or truck, delivered to the City of Houston. No accessory item furnished on truck or special body equipment shall advertise the name of the Prime Contractor/Supplier (i.e. mud flaps, etc.).

10.0 LICENSES AND PERMITS:

10.1 Prime Contractor/Suppliers are to adhere to all applicable federal, state as well as local laws and regulations. It is the Prime Contractor/Supplier's responsibility to acquire all necessary licenses and permits required by law.

10.2 Prime Contractor/Supplier shall be responsible for securing any and all inspections required by law, including State Inspection stickers. Any fee charged for these inspections shall be the responsibility of the Prime Contractor/Supplier and not the City of Houston.

10.3 At the time of delivery to the City of Houston, Prime Contractor/Suppliers are required to provide temporary paper license tags/plates for motor vehicles or other equipment required by the State of Texas to be registered for operation on public highways.

10.4 MOTOR VEHICLE COMMISSION CODE Texas Revised Civil Statutes, Annotated, Article 4413 (36) and 4413 (36a) (If Applicable)

10.4.1 **License Requirement:** Section 4.01. (a), "Except as provided by this Section, no person shall engage in business as, serve in the capacity of, or act as a dealer, manufacturer, distributor, converter, representative, … in this state …, without obtaining a license therefore as provided in this Act and the rules of the Board."

10.4.2 **Sale of New Motor Vehicles:** Section 5.04. (a), "No person may engage in the business of buying, selling, or exchanging new motor vehicles unless that person: (1) holds a valid **franchised dealer's license** issued by the Commission for the make or makes of new motor vehicles being bought, sold, or exchanged; or (2) is acting as a bona fide employee of the licensee."

10.4.3 **Licensed Franchised Dealers** submitting bids for new cabs & chassis with installed bodies, by this Statute, are required to employ **properly licensed converters** for the conversions of the new motor vehicles.

10.4.4 **The Act of Submitting a Bid is regarded as doing business, as the entity is soliciting a sale.** Accordingly, each bidder must be a **licensed franchised dealer** at the time the bid is submitted.

11.0 CERTIFICATE, WARRANTIES AND INVOICES:

11.1 Manufacturer's Certificate of Origin shall be made out to "City of Houston, Texas", 611 Walker, Houston, TX 77002 and delivered to the Finance Department representative at the time of delivery of the vehicle. Please note that the Certificate of Title will not meet this requirement. Warranties and copy of invoices shall also accompany each delivery.

12.0 CURB WEIGHT, DEVOID OF PAYLOAD:

12.1 The curb weight of vehicle is defined as the weight in pounds of the complete vehicle. Curb weight shall include the chassis, cab and body, all attached devices, equipment, full complement of fuel lubricants and coolants.

13.0 PAYLOAD CAPACITY:

13.1 Payload specified is defined as the minimum net weight required for occupants, body/cargo carrying capacity value stated in pounds required of each vehicle. The payload shall be evenly distributed in accordance with vehicle design and intended use.

14.0 GROSS VEHICLE WEIGHT RATING (GVWR):

14.1 Gross Vehicle Weight Rating means the loaded weight in pounds of a single vehicle. Manufacturers shall provide a rating label showing the actual GVWR of the vehicle furnished.

15.0 DIMENSIONS:

15.1 Unless otherwise specified, the cab to axle (CA) dimension provided shall permit an excess of 50 percent of the outside body length forward of the rear axle centerline, plus 3 inches for cab and body clearance.

16.0 WHEELBASE:

16.1 Unless specified or required by the stated CA dimensions, wheelbase shall be the manufacturer's shortest for the type and model specified.

17.0 SAFETY AND AIR POLLUTION REQUIREMENTS AND REGULATIONS:

17.1 The units bid shall be in full and complete compliance with all applicable safety and pollution requirements and regulations in effect at the time of bid submittal. This includes but is not limited to standards established by the United States Department of Transportation, including the Federal Motor Vehicle Safety Standards (FMVSS), the Occupational Safety and Health Administration (OSHA), the Environmental Protection Agency (EPA), the Texas Department of Transportation and the Texas Commission on Environmental Quality (TCEQ).

17.2 The City of Houston requires that the units bid be the lowest emission units, i.e. Nitrogen Oxides (NOx) and Fine Particulate Matter (PM) without increasing Hydrocarbons (HC), available on the market for the specified equipment. The emission standards established by the EPA shall be considered only as minimum standards. In the absence of EPA standards or if California Air Resources Board (CARB) standards provide lower emissions, CARB standards will be considered as the minimum if the specified unit and any required fuel is available to the City of Houston. Federally regulated engines must be covered by an EPA-issued Certificate of Conformity certifying the engine to be in compliance with federal emission standards and the Prime Contractor/Supplier shall provide the Certificate of Conformity with their bid or within three calendar days from the written request of the City. EPA emission label must be affixed to the vehicle and/or engine and be readily visible.

18.0 HEAVY DUTY EQUIPMENT AND ACCESSORIES:

18.1 The term "heavy duty" as used to describe an item, shall mean in excess of the usual quantity, quality, or capacity that is normally supplied with the standard production vehicle or component.

19.0 COOLING SYSTEM:

19.1 The cooling system shall be protected with not less than 50/50 solution of permanent type antifreeze and a coolant overflow recovery tank and compensating system if available. The manufacturer shall provide the heaviest duty component and maximum size cooling system applicable to the model offered.

20.0 SUSPENSION SYSTEM:

20.1 Vehicles equipped with dual rear wheels shall be furnished with auxiliary rear springs, or other type springing that has a rated capacity at least 10 percent greater than the primary spring requirements for the GVWR.

21.0 WHEELS AND TIRES:

21.1 Wheels and tires shall be alike in type and size. *Unless specified otherwise,* if a space saving spare assembly is the type offered on the specified model, it will be accepted. Vehicles requiring (STD) tires when equipped with P-Metric Tires shall be furnished with the Prime Contractor/Suppliers "extra load rated" tires when optionally available.

22.0 ELECTRIC SYSTEM:

22.1 The electrical systems equipment and components furnished for the specified bodies devices and equipment shall comply with all applicable SAE recommended standards and practices.

23.0 ALTERNATOR AND BATTERY:

23.1 When heavy-duty (HD) is specified, the Prime Contractor/Supplier shall furnish on the vehicle the next heaviest duty OEM component(s) available for the model (Item). Batteries furnished shall be the maintenance free types when available. When electrical power consuming equipment is furnished, the Prime Contractor/Supplier shall provide a generating system capable of supplying the total continuous electrical load of the vehicle and equipment furnished plus 10 percent. Battery ratings shall comply with SAE J 537.

23.2 The electrical equipment installed on these vehicles shall be suppressed to the limitations of SAE J 551.

24.0 WARRANTY:

24.1 For Non-Hybrid Vehicles:

24.1.1 A minimum of 36-months/36,000 miles bumper-to-bumper warranty with no deductibles on both materials and workmanship shall be provided for basic coverage.

24.1.2 5 years/50,000 miles on emission controls.

24.1.3 3 years/36,000 miles, No deductible on power train.

24.1.4 5 years/100,000 miles on corrosion rust through.

24.2 For Hybrid Vehicles:

24.2.1 A minimum of 36-months/36,000 miles bumper-to-bumper warranty with no deductibles on both materials and workmanship shall be provided for basic coverage.

24.2.2 8 years/80,000 miles on hybrid system

24.2.3 3 years/36,000 miles, no deductible on power train.

24.2.4 5 years/100,000 miles on corrosion rust through.

24.3 For Light-Duty Cab & Chassis:

24.3.1 A minimum of 36-month/36,000 mile bumper-to-bumper warranty with no deductible on both materials and workmanship shall be provided for basic coverage.

24.3.2 Five (5)-year/50,000 miles on emission controls.

24.3.3 Three (3)-year/36,000 miles, no deductible on power train.

24.3.4 Five (5)-year/100,000 miles on corrosion rust through.

24.4 For Body Options:

24.4.1 One (1) year warranty (complete) on service bodies and any listed options installed by the manufacturer. If manufacturer's standard warranty is longer, the City of Houston shall accept the longer warranty. Both parts and labor shall be included.

24.4.2 Three (3) year warranty on service bodies and any options installed by manufacturer for rust perforation. Body parts and labor shall be included.

24.4.3 One (1) year warranty for any option that will be required by the City of Houston installed by the Prime Contractor/Supplier. This shall include rust perforation, parts and labor.

24.4.4 The Prime Contractor/Supplier shall handle all warranty claims and all work shall be completed within ten (10) calendar days after receipt of equipment.

24. 5 The warranty period shall begin the date the vehicle is put into service by the City. Any and all documents necessary to effect warranty shall be properly applied for and submitted by the Prime Contractor/Supplier. Any warranty work is to be completed within ten (10) calendar days after the receipt of the vehicle by the Prime Contractor/Supplier without cost to the City.

24.6 Prime Contractor/Supplier shall provide a Manufacturer's Authorized Facility located within the Houston-Galveston Region (Harris County and its seven adjacent counties) for all warranty and maintenance service.

25.0 DELIVERY/INSPECTION REQUIREMENTS:

25.1 Unit(s) as specified herein, with delivery ticket, copy of original invoice, Certificate of Origin and other required documents and manuals, if required, shall be delivered Prepaid F.O.B. DESTINATION POINT, to the locations indicated on individual City of Houston Purchase order as follows:

25.1.1 **All automobiles, vans, utility vehicles and pickup trucks shall be delivered within 120 calendar days of receipt of purchase order.**

25.1.2 **All cabs and chassis, completed with bodies (if applicable), shall be delivered within 150 calendar days of receipt of purchase order.**

25.2 Equipping and Servicing:

25.2.1 All vehicles shall be delivered completely assembled, serviced, adjusted and all equipment including standard and optional equipment shall be installed and the units shall be fully operational. If vehicles are not fully operational, it shall be the Prime Contractor/Supplier's responsibility to have the units made fully operational prior to acceptance.

25.2.2 New Vehicle Pre-Delivery Service:
To be performed before the new vehicles are delivered to the City, shall include but may not be limited to the following services:

25.2.2.1 All fluids levels checked and maintained with the proper grade and type of fluids.

25.2.2.2 All vehicles shall have a minimum of 1/4 tank of fuel at the time of the delivery/inspection.

25.2.2.3 Pre-delivery inspection and service on the vehicles.

25.2.2.4 The interior of all units shall have been cleaned and the exterior washed.

25.2.2.5 The Prime Contractor/Supplier or their representative who is responsible for the final delivery shall provide, along with the other delivery documents, signed certificates stating that the above listed services were performed for the units being delivered and that the units are ready for continuous operation.

25.0 DELIVERY/INSPECTION REQUIREMENTS: (Continued):

25.2.3 Miscellaneous:

25.2.3.1 Two operable keys will be provided for each different lock on the vehicles unless otherwise specified in the bid specifications.

25.2.3.2 Mud flaps, heavy duty, fiber reinforced anti-sail type where required by law, without any visible advertisements.

25.3 Delivery/Inspection:

25.3.1 The Prime Contractor/Supplier shall notify the City contact listed under the "Ship To" section of the purchase order not less than three (3) days prior to expected delivery/arrival date(s) to permit delivery/inspection scheduling. The City contact shall advise successful Prime Contractor/Supplier as to the date, time and location of authorized delivery/inspection. An authorized representative of the Prime Contractor/Supplier shall supervise delivery to the City. The City will not assume any liability for vehicles delivered to unauthorized locations.

25.3.2 Each vehicle/equipment unit shall be inspected by the City before tender of delivery to determine its compliance with the specifications and/or to test its ability to perform its intended use.

25.3.3 Upon acceptance and receipt of the vehicle/equipment unit by the City, Prime Contractor/Supplier shall obtain the signatures and employee numbers of the City's receiving employees on the City's Equipment Inspection/Receiver Report as attached hereto.

25.4 Documentation at time of Delivery:

Prime Contractor/Supplier shall provide the following documentation **per purchase order** upon delivery:

- Copy of purchase order(s) and original invoice(s).
- Manufacturer's Certificate of Origin (Shall be made out to "City of Houston, Texas", 611 Walker, 11th Floor, Houston, TX 77002-2527 and delivered to the Finance Department representative at the time of delivery of the vehicle/equipment).
- Temporary paper license tags/plates, if applicable for equipment being delivered.
- Warranty policy(ies) and/or certifications as may be required in the Specifications.
- Parts, service, operator and maintenance manual(s) as may be required in the Technical Specifications.
- Key number(s) must be on Invoice(s).

25.5 Line Tickets:

25.5.1 Line sheets/line tickets from the manufacturer of the vehicle shall be provided for each vehicle and delivered along with other City-required documents and manuals. Each line sheet/line ticket shall list all components that make up the vehicle chassis and shall include the make, model, and serial number of each component. In addition, line sheets/line tickets shall be provided for all mounted bodies specified for cabs & chassis, and shall include but not be limited to manufacturer, serial number, size, and tare weight. All mounted equipment and components shall be listed by the manufacturer, serial number, weight restrictions (lifts, booms, hydraulic arms etc) and all other relevant data that identifies the component.

IMPORTANT NOTE: IF THE ABOVE REQUIRED DOCUMENTATION IS NOT PROVIDED AT DELIVERY, THE CITY OF HOUSTON WILL NOT ACCEPT THE UNIT(S)

26.0 LIQUIDATED DAMAGES:

26.1 Under the terms of this Contract (Purchase Order), the Prime Contractor/Supplier certifies to complete delivery of any vehicle/equipment within the specified calendar days, listed in the Delivery Section of the Technical Specifications, counting from the date the City of Houston purchase order is received by the Prime Contractor/Supplier. Prime Contractor/Supplier agrees that time is of the essence in performance of this Contract. The Prime Contractor/Supplier and the City of Houston understand and agree that a breach of contract as to completion on time will cause damages to the City and that the actual damages from the harm would be difficult to estimate accurately.

26.0 LIQUIDATED DAMAGES (Continued)

Therefore, for each and every calendar day that the vehicle/equipment is not delivered and/or accepted by the City beginning sixty-one (61) calendar days after the expiration of the time limit set in the Contract, the Prime Contractor/Supplier shall be liable for and shall pay to the City the sum of **Fifty dollars ($50.00)** per vehicle/equipment per calendar day, or portion thereof, as liquidated damages and not as a penalty. It is further agreed that the sum stipulated as liquidated damages is a reasonable estimate of the damage that will result from a failure of the Prime Contractor/Supplier to deliver the product/service in accordance with the Contract. The amount of the liquidated damages due may be deducted by the City from any payment or payments due to the Prime Contractor/Supplier, or if all payments otherwise due to the Prime Contractor/Supplier have been made, the amount of the liquidated damages shall be immediately due and payable upon demand.

26.2 Prime Contractor/Supplier will not be liable for delays in performing its obligations to the extent such delays are caused by unforeseeable conditions that are beyond the Prime Contractor/Supplier's reasonable control and directly interfere with performance, and are without Prime Contractor/Supplier's fault or negligence (force majeure). However, Prime Contractor/Supplier shall provide written notice to the City of the cause and extent of an **excusable delay** resulting from unforeseeable conditions. Upon cessation of the event causing the delay, Prime Contractor/Supplier shall provide written notice to the City of the actual delay incurred. Determination of force majeure shall rest solely with the City Purchasing Agent and the receiving department.

27.0 CONFLICT IN TERMS:

27.1 Should there be any conflict between the General Specifications and the Technical Specifications, the Technical Specifications shall prevail.

28.0 MISCELLANEOUS:

28.1 For purposes of this Contract, the phrase "City Purchasing Agent" shall be deemed to include both the City Purchasing Agent, and his or her designated representative(s).

28.2 Prospective bidders may propose "equivalent equipment" as additional item(s) for City-approved equipment listings of acceptable equipment in this Contract. Prospective bidders must submit, in writing to the City Purchasing Agent, 1) a request for approval of proposed equipment, 2) manufacturer's literature, and 3) a detailed comparison documenting that the equipment proposed is equivalent to existing equipment in the City-approved equipment listings. The approval request and all required documentation shall be in the Office of the City Purchasing Agent no later than 14 calendar days before the bids for this Contract are scheduled to be opened and publicly read. Requests for equipment approval not received by the time specified above will not be considered for this Contract. Determination as to whether the equipment proposed is equivalent to the items in the City-approved equipment listings shall rest solely with the City Purchasing Agent.

29.0 PRIME CONTRACTOR/SUPPLIER REFERENCES (SEE EXHIBIT NO. 1):

29.1 In order to receive bid award consideration, the bidder must be able to demonstrate that it has provided, as a prime contractor/supplier, products that are similar to those offered on the electronic bid form to governmental agencies or other entities within the last two years.

EXHIBIT NO. 1

PRIME CONTRACTOR/SUPPLIER REFERENCES

In order to receive bid award consideration, the bidder must be able to demonstrate that it has provided, as a prime contractor/supplier, products that are similar to those offered on the electronic bid form to governmental agencies or other entities within the last two years. The references should be listed in the space provided below. Please attach additional pages as necessary. If references are not included with the bid, the bidder shall be required to provide such references to the City of Houston within five working days from receipt of a written request from the City of Houston to do so. **Bidder's capability and experience shall be a factor in determining the Contractor's responsibility.** The City of Houston reserves the right to determine if such products are appropriately similar to those offered.

1. Entity Name: _____

   Address: _____

   City & State: _____

   Name & Phone Number of Contact: _____

2. Entity Name: _____

   Address: _____

   City & State: _____

   Name & Phone Number of Contact: _____

3. Entity Name: _____

   Address: _____

   City & State: _____

   Name & Phone Number of Contact: _____

4. Entity Name: _____

   Address: _____

   City & State: _____

   Name & Phone Number of Contact: _____

5. Entity Name: _____

   Address: _____

   City & State: _____

   Name & Phone Number of Contact: _____

SECTION B

SPECIFICATIONS

PART II
TECHNICAL SPECIFICATIONS

ITEM NO.	DESCRIPTION
1	SERIES 360B-LEV INTERMEDIATE 4-DOOR SEDAN, 6-CYLINDER GASOLINE, MUST MEET OR EXCEED THE FEDERAL LEV CERTIFICATION AND INCLUDE THE FOLLOWING STANDARD EQUIPMENT (SAP MATERIAL NO. 10013077)

MANUFACTURER	**CHEVROLET**	**FORD**	**TOYOTA**
MODEL	MALIBU	FUSION	CAMRY

SPECIFICATION	**MINIMUM REQUIREMENTS**
WHEEL BASE (INCHES)	107
LENGTH (INCHES)	189
WIDTH (INCHES)	70
HEIGHT (INCHES)	56
ENGINE DISPLACEMENT (LITERS)	3.0L-6 CYLINDER
ENGINE (HP)	221
TORQUE (LB-FT)	221

STANDARD EQUIP. NO	DESCRIPTION
1	AIR CONDITIONING (INCLUDES OPT. 87)
37.1	COLORS, SOLID, (O.E.M. STANDARD)
73.2	MIRRORS, POWER, REARVIEW, LEFT & RIGHT SIDES
77	STEERING, POWER
91	RADIO, AM/FM
115	TILT STEERING WHEEL
128	TRANSMISSION, AUTOMATIC
144	INTERMITTENT WIPERS
200	WHEEL COVERS; STANDARD, SET OF FOUR
208	REAR WINDOW DEFROSTER
209	POWER DOOR LOCKS/POWER WINDOWS
211	CLOTH SEATS
236	BODY SIDE MOLDING
241	ANTI-LOCK BRAKE SYSTEM (OEM STANDARD)

OPTIONAL EQUIPMENT:

OPT. NO.	DESCRIPTION
238	FLOOR MATS (SAP MATERIAL NO. 10013078)

ITEM NO.	DESCRIPTION
2	SERIES 655C-LEV 3/4 TON CARRYALL 4-DOOR UTILITY VEHICLE, 2-WHEEL DRIVE, 8-CYLINDER GASOLINE, MUST MEET OR EXCEED THE FEDERAL LEV CERTIFICATION AND INCLUDE THE FOLLOWING STANDARD EQUIPMENT. (SAP NO. 10013089)

MANUFACTURER	**CHEVROLET**
MODEL	SUBURBAN 20906 FLEET PACKAGE

SPECIFICATION	**MINIMUM REQUIREMENTS**
WHEEL BASE (INCHES)	130
OVERALL LENGTH (INCHES)	222
APPROX. PAYLOAD (POUNDS)	2560
SEATING CAPACITY	5
GVWR (POUNDS)	8,600
ENGINE DISPLACEMENT (LITERS)	6.0-V8
ENGINE HP	352
ENGINE TORQUE	383
TIRE SIZE	MFG. STANDARD

STANDARD EQUIP. NO	DESCRIPTION
2	AIR CONDITIONER, FRONT & REAR
16	ALTERNATOR, MANUFACTURER'S 130 AMP MINIMUM
37.1	COLORS, SOLID (O.E.M. STANDARD)
73.2	MIRRORS, POWER, REARVIEW, LEFT & RIGHT SIDES
77	STEERING, POWER
91	RADIO AM/FM
107.1	SPARE TIRE AND WHEEL, LOCKABLE
115	TILT STEERING
116	CRUISE CONTROL
128	TRANSMISSION, AUTOMATIC
132.1	OIL COOLER, AUXILIARY TRANSMISSION
144	WIPERS, INTERMITTENT
200	WHEEL COVERS, (O.E.M. STANDARD)
241	ANTI-LOCK BRAKE SYSTEM (OEM STANDARD)

OPTIONAL EQUIPMENT:

OPT. NO.	DESCRIPTION
45	LIMITED SLIP DIFFERENTIAL (SAP NO. 10013093)
52	FOUR WHEEL DRIVE (SAP NO. 10013091)
99	REAR SEAT, THIRD ROW (NOT AVAILABLE W/OPT 210) (SAP NO. 10013141)
111.1	SPOTLIGHTS, DUAL (SAP NO. 10023971)
210	SPECIAL SEATING REQUIREMENT (SAP NO. 10013097)
211	CLOTH SEATS (SAP NO. 10013090)

ITEM NO. 2 (CONTINUED):

SERIES 655C-LEV (CONTINUED):

OPTIONAL EQUIPMENT:

OPT. NO.	DESCRIPTION
224.7	LIGHTBAR AND SIREN PACKAGE (SAP NO. 10013092)
249	METER, HOUR (SAP NO. 10030648)
N/A	LIFT KIT & SPACER W/INSTALLATION (SAP NO. 10030862)
N/A	AUTOMOTIVE WHEELS (SAP NO. 10030863)

ITEM NO.	DESCRIPTION
3	SERIES 665C-LEV HEAVY DUTY UTILITY VEHICLE, 4-DOOR, 2-WHEEL DRIVE, 8-CYLINDER GASOLINE, MUST MEET OR EXCEED THE FEDERAL LEV CERTIFICATION AND INCLUDE THE FOLLOWING STANDARD EQUIPMENT.

MANUFACTURER	**FORD**	**CHEVROLET**
MODEL	EXPEDITION	TAHOE

SPECIFICATION	**MINIMUM REQUIREMENTS**
WHEEL BASE (INCHES)	116
OVERALL LENGTH	202
WIDTH	78
HEIGHT	76
APPROX. PAYLOAD (POUNDS)	1,700
GVWR (POUNDS)	7,300
TOWING CAPACITY	8,000
SEATING CAPACITY	5
ENGINE DISPLACEMENT (LITERS)	5.3L - V8
ENGINE HORSEPOWER	300
ENGINE TORQUE	340
TIRE SIZE	MFG. STANDARD

STANDARD EQUIP. NO	DESCRIPTION
1	AIR CONDITIONER
16	130 AMP ALTERNATOR
29.1	BUMPER, OEM STANDARD
37.1	COLORS, SOLID (O.E.M. STANDARD)
73.2	MIRRORS, POWER, REARVIEW, LEFT & RIGHT SIDES
77	STEERING, POWER
91	RADIO, AM/FM
107.1	SPARE TIRE & WHEEL, LOCKING
128	TRANSMISSION, AUTOMATIC
144	WIPERS, INTERMITTENT
241	ANTILOCK BRAKING SYSTEM (OEM STANDARD)

OPTIONAL EQUIPMENT:

OPT. NO.	DESCRIPTION
52	4-WHEEL DRIVE (SAP NO. 10013133)
111.1	DUAL SPOTLIGHTS (LEFT & RIGHT SIDES) (SAP NO. 10013129)
211	CLOTH SEATS (SAP NO. 10013127)
213.1	2-WD FACTORY INSTALLED TRAILER TOWING PACKAGE WITH RECEIVER HITCH (SAP NO. 10013132)
213.3	4-WD FACTORY INSTALLED TRAILER TOWING PACKAGE WITH RECEIVER HITCH (SAP NO. 10013131)
224.7	LIGHTBAR AND SIREN PACKAGE (SAP NO. 10024053)
249	HOUR METER (SAP NO. 10030185)

ITEM NO.	DESCRIPTION

4 SERIES 668B-LEV SMALL CARGO VAN, EXTENDED, FRONT WHEEL DRIVE, 6-CYLINDER GASOLINE, MUST MEET OR EXCEED THE FEDERAL LEV CERTIFICATION AND INCLUDE THE FOLLOWING STANDARD EQUIPMENT.
(SAP NO. 10024054)

MANUFACTURER	**DODGE**	**TOYOTA**
MODEL	CARAVAN EXTENDED	SIENNA

SPECIFICATION	**REQUIREMENTS**
WHEEL BASE (INCHES)	119
OVERALL LENGTH (INCHES)	201
CARGO LENGTH (INCHES)	93
WIDTH	72
HEIGHT	68
GVWR (POUNDS)	5000
EPA CARGO A	136 CU. FT.
ENGINE DISPLACEMENT (LITERS)	3.3-V6
ENGINE HP	175
ENGINE TORQUE	205
TIRE SIZE	MFG STANDARD

STANDARD EQUIP. NO	DESCRIPTION
1	AIR CONDITIONING, FRONT (INCLUDES OPT. 87)
37.1	COLORS, SOLID (OEM STANDARD)
73.2	MIRRORS, POWER, REARVIEW, LEFT & RIGHT SIDES
77	STEERING, POWER
91	RADIO, AM/FM
97	SEAT, PASSENGER
128	TRANSMISSION, AUTOMATIC
144	WIPERS, INTERMITTENT
145	REAR WINDOW WIPERS AND WASHER
241	ANTILOCK BRAKING SYSTEM (OEM STANDARD)

OPTIONAL EQUIPMENT:

OPT. NO.	DESCRIPTION

209 POWER DOOR LOCKS AND POWER WINDOWS
(SAP NO. 10024057)

229 SLIDING SIDE DOOR
(SAP NO. 10024058)

ITEM NO.	DESCRIPTION

5 SERIES 741B-LEV SMALL EXTENDED PASSENGER VAN, 7 PASSENGERS, 6-CYLINDER, GASOLINE MUST MEET OR EXCEED THE FEDERAL LEV CERTIFICATION AND INCLUDE THE FOLLOWING STANDARD EQUIPMENT.
(SAP NO. 10013191)

MANUFACTURER	**DODGE**	**TOYOTA**
MODEL	GRAND CARAVAN	SIENNA

SPECIFICATION	**REQUIREMENTS**
WHEEL BASE (INCHES)	119
OVERALL LENGTH (INCHES)	201
WIDTH	72
HEIGHT	68
GVWR (POUNDS)	5000
ENGINE DISPLACEMENT (LITERS)	3.3-V6
ENGINE HP	175
ENGINE TORQUE	205
TIRE SIZE	MFG. STANDARD

5 STANDARD

EQUIP. NO	DESCRIPTION
2	AIR CONDITIONING, FRONT & REAR
37.1	COLORS, SOLID (OEM STANDARD)
73.2	MIRRORS, POWER, REARVIEW, LEFT & RIGHT SIDES
77	STEERING, POWER
91	RADIO, AM/FM
128	TRANSMISSION, AUTOMATIC
132.1	OIL COOLER, TRANSMISSION
144	WIPERS, INTERMITTENT
145	REAR WINDOW WIPERS AND WASHER
211	SEATS, CLOTH
241	ANTILOCK BRAKING SYSTEM (OEM STANDARD)

OPTIONAL EQUIPMENT:

OPT. NO.	DESCRIPTION

208 REAR DEFROSTER
(SAP NO. 10024124)

209 POWER LOCKS/POWER WINDOWS PACKAGE
(SAP NO. 10024125)

215 CARPET ONLY: FRONT AND REAR
(SAP NO. 10024128)

229 SLIDING SIDE DOOR
(SAP NO. 10013193)

248 BACKUP ALARM, ELECTRONIC
(SAP NO. 10028793)

ITEM NO.	DESCRIPTION
6	SERIES 843B-LEV COMPACT PICKUP, REGULAR CAB, SHORT BED, 5/6 CYLINDER GASOLINE, MUST MEET OR EXCEED THE FEDERAL LEV CERTIFICATION AND INCLUDE THE FOLLOWING STANDARD EQUIPMENT. (SAP NO. 10013211)

MANUFACTURER	**FORD**	**CHEVROLET**
MODEL	RANGER	COLORADO CS15403

SPECIFICATION	**MINIMUM REQUIREMENTS**
WHEEL BASE (INCHES)	111
OVERALL LENGTH (INCHES)	188
BOX LENGTH (INCHES)	72
APPROX. PAYLOAD (POUNDS)	1160
GVWR (POUNDS)	4300
ENGINE DISPLACEMENT (LITERS)	3.7L
ENGINE HP	207
ENGINE TORQUE	235
TIRE/RIM SIZE	MFG. STANDARD

STANDARD EQUIP. NO	DESCRIPTION
1	AIR CONDITIONING (INCLUDES OPT 87)
29.1	BUMPER, O.E.M. STANDARD
37.1	COLORS, SOLID (OEM STANDARD)
71	MIRRORS, EXTERIOR, LEFT & RIGHT SIDES
77	STEERING, POWER
91	RADIO, AM/FM
107.1	FULL SIZE SPARE TIRE AND WHEEL WITH LOCKABLE CARRIER
128	TRANSMISSION, AUTOMATIC
144	WIPERS, INTERMITTENT
200.1	HUB CAPS, O.E.M. STANDARD
241	ANTILOCK BRAKING SYSTEM (OEM STANDARD)
253	CARGO AREA LIGHT

OPTIONAL EQUIPMENT:

OPT. NO.	DESCRIPTION
214.5	LIFT GATE (SAP NO. 10031615)
224.4	STROBE LIGHT, MOUNTED ON ROOF, LOW PROFILE (SAP NO. 10024150)
249	HOUR METER (SAP NO. 10030462)
264	HEADACHE RACK (SAP NO. 10030172)

ITEM NO.	DESCRIPTION

7 SERIES 855C-LEV PICKUP, REGULAR CAB, SHORT BED, 8-CYLINDER GASOLINE, MUST MEET OR EXCEED THE FEDERAL LEV CERTIFICATION AND INCLUDE THE FOLLOWING STANDARD EQUIPMENT.
(SAP NO. 10013213)

MANUFACTURER	**FORD**	**CHEVROLET**	**DODGE**
MODEL	F150	C1500	1500

SPECIFICATION	**MINIMUM REQUIREMENTS**
WHEEL BASE (INCHES)	119
OVERALL LENGTH (INCHES)	203
BOX LENGTH (INCHES)	78
GVWR (POUNDS)	6400
PAYLOAD	1700
ENGINE DISPLACEMENT (LITERS)	4.6-V8
ENGINE HP	248
ENGINE TORQUE	294
TIRE/RIM SIZE	MFG. STANDARD

STANDARD EQUIP. NO	DESCRIPTION
1	AIR CONDITIONING (INCLUDES OPT 87)
29.1	BUMPER, O.E.M. STANDARD
37.1	COLORS, SOLID (OEM STANDARD)
59.3	FUEL TANK(S), 25 GALLON CAPACITY
71	MIRRORS, LOW MOUNT TYPE
77	STEERING, POWER
91	RADIO, AM/FM
107.1	SPARE TIRE AND WHEEL WITH LOCKABLE CARRIER
128	TRANSMISSION, AUTOMATIC
132.1	OIL COOLER, TRANSMISSION
144	WIPERS, INTERMITTENT
200.1	HUB CAPS, O.E.M. STANDARD
241	ANTILOCK BRAKING SYSTEM (OEM STANDARD)
253	CARGO AREA LIGHT

OPTIONAL EQUIPMENT:

OPT. NO.	DESCRIPTION

111A SPOTLIGHT
(SAP NO. 10013216)

213.1 FACTORY INSTALLED TRAILER TOWING PACKAGE WITH RECEIVER HITCH
(SAP NO. 10013220)

224.4 STROBE LIGHT, MOUNTED ON ROOF, LOW PROFILE
(SAP NO. 10013217)

249 HOUR METER
(SAP NO. 10030449)

264 HEADACHE RACK
(SAP NO. 10030449)

ITEM NO.	DESCRIPTION
8	SERIES 867C-LEV PICKUP, CREW CAB, LONG BED, 6-PASSENGER, 8-CYLINDER GASOLINE, MUST MEET OR EXCEED THE FEDERAL LEV CERTIFICATION AND INCLUDE THE FOLLOWING STANDARD EQUIPMENT. (SAP NO. 10030741)

MANUFACTURER	**FORD**	**CHEVROLET**	**DODGE**
MODEL	F250	C2500	2500

SPECIFICATION	**MINIMUM REQUIREMENTS**
WHEEL BASE (INCHES)	133
OVERALL LENGTH (INCHES)	224
BOX LENGTH (INCHES)	96
GVWR (POUNDS)	6400
PAYLOAD	1600
ENGINE DISPLACEMENT (LITERS)	4.6-V8
ENGINE HP	248
ENGINE TORQUE	294
TIRE/RIM SIZE	MFG. STANDARD

STANDARD EQUIP. NO	DESCRIPTION
1	AIR CONDITIONING (INCLUDES OPT 87)
29.1	BUMPER, O.E.M. STANDARD
37.1	COLORS, SOLID (OEM STANDARD)
59.3	FUEL TANK(S), 25 GALLON CAPACITY
71	MIRRORS, LOW MOUNT TYPE
77	STEERING, POWER
91	RADIO, AM/FM
107.1	SPARE TIRE AND WHEEL WITH LOCKABLE CARRIER
128	TRANSMISSION, AUTOMATIC
132.1	OIL COOLER, TRANSMISSION
144	WIPERS, INTERMITTENT
200.1	HUB CAPS, O.E.M. STANDARD
241	ANTILOCK BRAKING SYSTEM (OEM STANDARD)
253	CARGO AREA LIGHT

ITEM NO.	DESCRIPTION
9	SERIES 868C-LEV PICKUP EXTENDED CAB, LONG BED, 8-CYLINDER GASOLINE, MUST MEET OR EXCEED THE FEDERAL LEV CERTIFICATION AND INCLUDE THE FOLLOWING STANDARD EQUIPMENT. (SAP NO. 10013248)

MANUFACTURER	**FORD**	**CHEVROLET**	**DODGE**
MODEL	F250SD EXT	C2500HD EXT	2500 QUAD CAB

SPECIFICATION	**MINIMUM REQUIREMENTS**
WHEEL BASE (INCHES)	157
OVERALL LENGTH (INCHES)	247
BOX LENGTH (INCHES)	96
GVWR (POUNDS)	9000
APPROX. PAYLOAD (POUNDS)	3000
ENGINE DISPLACEMENT (LITERS)	5.4-V8
ENGINE HP	300
ENGINE TORQUE	360
TIRE/RIM SIZE	MFG. STANDARD

STANDARD EQUIP. NO	DESCRIPTION
1	AIR CONDITIONING INCLUDES OPT 87
29.1	BUMPER, O.E.M. STANDARD
37.1	COLORS, SOLID (OEM STANDARD)
59.1	FUEL TANK(S), 30 GALLON CAPACITY
71	MIRRORS, LOW MOUNT TYPE
77	STEERING, POWER
91	RADIO, AM/FM
107.1	SPARE TIRE AND WHEEL WITH LOCKABLE CARRIER
128	TRANSMISSION, AUTOMATIC
132.1	OIL COOLER, TRANSMISSION
144	WIPERS, INTERMITTENT
200.1	HUB CAPS, OEM STANDARD
241	ANTILOCK BRAKING SYSTEM (OEM STANDARD)
253	CARGO AREA LIGHT

OPTIONAL EQUIPMENT:

OPT. NO.	DESCRIPTION
111A	SPOTLIGHT (SAP NO. 10013252)
213.1	FACTORY INSTALLED TRAILER TOWING PACKAGE WITH RECEIVER HITCH (SAP NO. 10013251)
217	SPRAY IN PICKUP BED AND TAILGATE LINER RHINO TUFF-STUFF OR LINE -X (SAP NO. 10013253)
224.4	STROBE LIGHT, MOUNTED ON ROOF, LOW PROFILE (SAP NO. 10024014)

ITEM NO 9 (CONTINUED):

SERIES 868C-LEV (CONTINUED):

OPTIONAL EQUIPMENT:

OPT. NO.	DESCRIPTION
224.8	LIGHTBAR MINIFREEDOM WHELEN MODELFT8AAAAP (SAP NO. 10024013)
243	COMBINATION HITCH, BUYERS PRODUCTS NO. BH82000 WITH PM87 HITCH MOUNT AND HP6253 WC HITCH PIN. TWO-BUYER PRODUCT B40 LASHING WELDED ON TOP OF BUMPER. (IF ORDERING THIS OPTION, DEPARTMENT MUST ORDER OPTION 213 OR 213.1) (SAP NO. 10013249)
249	HOUR METER SAP NO. (10030478)
264	HEADACHE RACK (SAP NO. 10030179)

ITEM NO.	DESCRIPTION

10 SERIES 872C-LEV PICKUP, REGULAR CAB, LONG BED, 8-CYLINDER GASOLINE, MUST MEET OR EXCEED THE FEDERAL LEV CERTIFICATION AND INCLUDE THE FOLLOWING STANDARD EQUIPMENT.
(SAP NO. 10013256)

MANUFACTURER	**FORD**	**CHEVROLET**	**DODGE**
MODEL	F250SD	C2500HD	2500

SPECIFICATION	**MINIMUM REQUIREMENTS**
WHEEL BASE (INCHES)	133
OVERALL LENGTH (INCHES)	224
BOX LENGTH (INCHES)	96
GVWR (POUNDS)	8800
APPROX. PAYLOAD (POUNDS)	3000
ENGINE DISPLACEMENT (LITERS)	5.4-V8
ENGINE HP	300
ENGINE TORQUE	365
TIRE/RIM SIZE	MFG. STANDARD

STANDARD

EQUIP. NO	DESCRIPTION
1	AIR CONDITIONING (INCLUDES OPT 87)
29.1	BUMPER, O.E.M. STANDARD
37.1	COLORS, SOLID (OEM STANDARD)
59.1	FUEL TANK(S), 30 GALLON CAPACITY
71	MIRRORS, LOW MOUNT TYPE
77	STEERING, POWER
91	RADIO, AM/FM
107.1	SPARE TIRE AND WHEEL WITH LOCKABLE CARRIER
128	TRANSMISSION, AUTOMATIC
132.1	OIL COOLER, TRANSMISSION
144	WIPERS, INTERMITTENT
200.1	HUB CAPS, OEM STANDARD
241	ANTILOCK BRAKING SYSTEM (OEM STANDARD)
253	CARGO AREA LIGHT

OPTIONAL EQUIPMENT:

OPT. NO.	DESCRIPTION

111A SPOTLIGHT
(SAP NO. 10013264)

213.1 FACTORY INSTALLED TRAILER TOWING PACKAGE WITH RECEIVER HITCH
(SAP NO. 10013259)

217 SPRAY IN PICKUP BED AND TAILGATE LINER RHINO TUFF-STUFF OR LINE-X
(SAP NO. 10013266)

224.8 LIGHTBAR MINIFREEDOM WHELEN MODEL FT8AAAAP
(SAP NO. 10013270)

243 COMBINATION HITCH, BUYERS PRODUCTS NO. BH82000 WITH PM87 HITCH MOUNT AND HP6253 WC HITCH PIN. TWO-BUYER PRODUCT B40 LASHING WELDED ON TOP OF BUMPER. (IF ORDERING THIS OPTION, DEPARTMENT MUST ORDER OPTION 213 OR 213.1)
(SAP NO. 10024034)

ITEM NO 10 (CONTINUED):

SERIES 868C-LEV (CONTINUED):

OPTIONAL EQUIPMENT:

OPT. NO.	DESCRIPTION
249	HOUR METER (SAP NO. 10030480)
264	HEADACHE RACK (SAP NO. 10013260)

ITEM NO.	DESCRIPTION
11	SERIES 875C-LEV60CA CAB & CHASSIS, GASOLINE, DUAL REAR WHEELS, 11,200 GVWR, 60 CA, 8 CYLINDER, MUST MEET OR EXCEED THE FEDERAL LEV CERTIFICATION, INCLUDING THE FOLLOWING STANDARD EQUIPMENT (SAP NO. 10013307)

MANUFACTURER	**FORD**	**CHEVROLET**
MODEL	F350 SD	CC36003

SPECIFICATION	MINIMUM REQUIREMENTS
WHEEL BASE (INCHES)	135.5
CAB TO AXLE (INCHES)	60
APPROX. PAYLOAD (POUNDS)	5,870
GVWR (POUNDS)	11,400
ENGINE DISPLACEMENT (LITERS)	5.4 V8
ENGINE NET HP	300
ENGINE TORQ	365
TRANSMISSION, AUTOMATIC	AUTOMATIC
TIRE SIZE & LOAD RANGE	MFG. STANDARD
RIM SIZE (INCHES)	MFG. STANDARD

STANDARD EQUIP. NO	DESCRIPTION
1	AIR CONDITIONING INCLUDES OPT. 87
37.1	SOLID COLORS, O.E.M. STANDARD
59.1	FUEL TANK(S), 30 GALLON CAPACITY
71	MIRRORS, LOW MOUNT TYPE
77	STEERING, POWER
91	RADIO, AM/FM
128	TRANSMISSION, AUTOMATIC
132.1	TRANSMISSION COOLER
144	WIPERS, INTERMITTENT TYPE
213.2	TRAILER TOWING PACKAGE
241	ANTILOCK BRAKING SYSTEM (OEM STANDARD)
253	CARGO AREA LIGHT

OPTIONAL EQUIPMENT:

OPT. NO	DESCRIPTION
52	FOUR-WHEEL DRIVE (SAP NO. 10030960)
136.1	EXTENDED WARRANTY (SAP NO. 10024426)
251	ELECTRIC BRAKE CONTROLLER (SAP NO. 10013309)

OPTIONAL EQUIPMENT FOR ITEM NO. 11 SERIES 875CLEV60CA CAB AND CHASSIS (CONTINUED)

OPTION NO.	DESCRIPTION
11A	SERIES 2005 SERVICE BODY, REGULAR OR STANDARD TYPE, 108 INCHES LONG TO FIT A 60 INCH CAB TO AXLE, DUAL REAR WHEEL CAB & CHASSIS, INCLUDING THE FOLLOWING STANDARD EQUIPMENT (SAP MATERIAL NO. 10012992)

STANDARD EQUIP. NO	DESCRIPTION
2.17	LOCKING WATER COOLER
2.18	TAILGATE, OEM STANDARD
2.26	CLEARANCE LIGHTS
2.27	MUD FLAPS TWO (2) VERTICAL COMPARTMENTS ON EACH SIDE ONE (1) HORIZONTAL COMPARTMENT OVER WHEEL WELL ON EACH SIDE

APPROVED BRANDS

RKI:	L60DW89 (Chevrolet/Dodge)/ L60DW94 (Ford)
READING:	108GADW (Chevrolet)/ 108DADW (Dodge)/ 108FADW (Ford)
KNAPHEIDE:	6108DJ (Chevrolet/Dodge)/ 6108D54J (Ford)
OMAHA:	108DV (Chevrolet/Dodge)/ 108D54V (Ford)
STAHL:	108VVD (60005013) (Chevrolet/Dodge)/ 1008VVD (6005014) (Ford)

OPTIONAL EQUIPMENT FOR SERIES 2005 TRUCK BODY

OPTION NO.	DESCRIPTION
2.1	OVERHEAD LADDER RACKS (SAP NO. 10024838)
2.5	VISE RACK WITH PIPE HANGER (SAP NO. 10013003
2.10	REAR BUMPER, MANUFACTURER'S STANDARD 12" WITH TREADPLATE (SAP MATERIAL NO. 10024431)
2.11	CENTRAL LOCKING SYSTEM (SAP NO. 10012995)
2.12	TREAD PLATE 3/16" FOR FLOOR (SAP NO. 10013001)
2.19	CONNECTOR 6-WAY MOUNTED ON REAR BUMPER AND CONNECT TO CABLE (SAP NO. 10013000)
2.20	TOP OPENING COMPARTMENT (SAP NO. 10024635)

ITEM NO.	DESCRIPTION
12	SERIES 875DLEV 60CA CAB & CHASSIS, 60 INCH CA, DIESEL, DUAL REAR WHEELS, 11,200 GVWR, MUST MEET OR EXCEED THE FEDERAL LEV CERTIFICATION INCLUDING THE FOLLOWING STANDARD EQUIPMENT (SAP NO. 10013305)

MANUFACTURER	**FORD**	**CHEVROLET**
MODEL	F350 SD	CC36003

SPECIFICATION	MINIMUM REQUIREMENTS
WHEEL BASE (INCHES)	135.5
CAB TO AXLE (INCHES)	60
APPROX. PAYLOAD (POUNDS)	5800
GVWR (POUNDS)	11,200
ENGINE DISPLACEMENT (LITERS)	6.4L
ENGINE NET HP	305
ENGINE TORQ	570
TRANSMISSION, AUTOMATIC	AUTOMATIC
TIRE SIZE & LOAD RANGE	MFG. STANDARD
RIM SIZE (INCHES)	MFG. STANDARD

STANDARD EQUIP. NO	DESCRIPTION
1	AIR CONDITIONING INCLUDES OPT. 87
37.1	COLORS, SOLID (OEM STANDARD)
59.1	FUEL TANK(S), 30 GALLON CAPACITY
71	MIRRORS, LOW MOUNT TYPE
77	STEERING, POWER
91	RADIO, AM/FM
128	TRANSMISSION, AUTOMATIC
132.1	TRANSMISSION COOLER
144	INTERMITTENT WIPERS
213.2	TRAILER TOWING PACKAGE
241	ANTILOCK BRAKING SYSTEM (OEM STANDARD)
253	CARGO AREA LIGHT

OPTIONAL EQUIPMENT

OPT. NO.	DESCRIPTION
45	LIMITED SLIP DIFFERENTIAL (SAP NO. 10024559)
224.8	LIGHTBAR MINIFREEDOM, WHELEN MODEL FT8AAAAP (SAP NO. 10024568)
249	HOUR METER (SAP NO. 10024570)

OPTIONAL EQUIPMENT FOR ITEM 12 SERIES 875D LEV 60CA CAB AND CHASSIS (CONTINUED)

OPTION NO.	DESCRIPTION
12A	BODY DUMP TRUCK 2/3 CU.YD. SN4000 8' BED 60" CA (SAP NO. 10024744)

OPTIONAL EQUIPMENT FOR SERIES 4000 DUMP TRUCK BODY 2/3 CU. YD.

OPTION NO.	DESCRIPTION
1	HITCH, HOLLAND PINTLE MODEL T60AOL OR EQUIVALENT REINFORCED TO FRAME CAPABLE OF PULLING MINIMUM OF 30,000 LBS. (SAP NO. 10024745)
5	CONNECTOR 6-WAY FEMALE FLAP TO BE PROVIDED AND MOUNTED ON REAR BUMPER AND CONNECT TO CABLE (SAP NO. 10024748)
11	TARP DONOVAN 5000 SU HD PVC COATED MESH COVER (SAP NO. 10024751)
18	TRAILER TOWING PACKAGE, AND SEVEN-WAY ELECTRICAL CABLE EXTENDED TO REAR OF FRAME FOR STRAIGHT TRUCK APPLICATION (SAP NO. 10024755)

ITEM NO.	DESCRIPTION

13 SERIES 881C-LEV PICKUP, 6-PASSENGER CREW CAB, LONG BED, SINGLE REAR WHEEL, 8-CYLINDER GASOLINE, MUST MEET OR EXCEED THE FEDERAL LEV CERTIFICATION AND INCLUDE THE FOLLOWING STANDARD EQUIPMENT.
(SAP NO. 10013273)

MANUFACTURER	**FORD**	**CHEVROLET**
MODEL	F350SD-CREW CAB	C2500HD-CREW CAB

SPECIFICATION	**MINIMUM REQUIREMENTS**
WHEEL BASE (INCHES)	167
OVERALL LENGTH (INCHES)	258
BOX LENGTH (INCHES)	96
GVWR (POUNDS)	9900
APPROX. PAYLOAD (POUNDS)	3600
ENGINE DISPLACEMENT (LITERS)	5.4-V8
ENGINE HP	300
ENGINE TORQUE	365
TIRE/RIM SIZE	MFG. STANDARD

STANDARD EQUIP. NO	DESCRIPTION
1	AIR CONDITIONING (INCLUDES OPT 87)
29.1	BUMPER, O.E.M. STANDARD
37.1	COLORS, SOLID (OEM STANDARD)
59.1	FUEL TANK(S), 30 GALLON CAPACITY
71	MIRRORS, LOW MOUNT TYPE
77	STEERING, POWER
91	RADIO, AM/FM
107.1	SPARE TIRE AND WHEEL WITH LOCKABLE CARRIER
128	TRANSMISSION, AUTOMATIC
132.1	OIL COOLER, TRANSMISSION
144	WIPERS, INTERMITTENT
200.1	HUB CAPS, OEM STANDARD
241	ANTILOCK BRAKING SYSTEM (OEM STANDARD)
253	CARGO AREA LIGHT

OPTIONAL EQUIPMENT:

OPT. NO.	DESCRIPTION
45	LIMITED SLIP DIFFERENTIAL (SAP NO. 10013275)
123.1	TOOL BOX (SAP NO. 10024226)
123.5	TOOL BOX LOW PROFILE (SAP NO. 10031605)
213.1	FACTORY INSTALLED TRAILER TOWING PACKAGE WITH RECEIVER HITCH (SAP NO. 10013274)
214	LIFT GATE (SAP NO. 10024228)

SERIES 881C-LEV CONTINUED

OPTIONAL EQUIPMENT:

OPT. NO.	DESCRIPTION
217	SPRAY IN PICKUP BED AND TAILGATE LINER RHINO TUFF-STUFF OR LINE-X (SAP NO. 10013278)
224.4	STROBE LIGHT, MOUNTED ON ROOF, LOW PROFILE (SAP NO. 10024236)
224.8	LIGHTBAR MINIFREEDOM WHELEN MODEL FT8AAAAP (SAP NO. 10013279)
243	COMBINATION HITCH, BUYERS PRODUCT NO. BH82000 WITH PM87 HITCH MOUNT AND HP6253 WC HITCH PIN. TWO-BUYERS PRODUCT B40 LASHING WELDED ON TOP OF BUMPER (IF ORDERING THIS OPTION, DEPARTMENT MUST ORDER OPTION 213 OR 213.1) (SAP NO. 10024240)
249	HOUR METER (SAP NO. 10030481)
264	HEADACHE RACK (SAP NO. 10024247)

ITEM NO.	DESCRIPTION
14	SERIES 886C-LEV PICKUP, SIX PASSENGER CREW CAB, LONG BED, DUAL REAR WHEELS, 8-CYLINDER, GASOLINE, MUST MEET OR EXCEED THE FEDERAL LEV CERTIFICATION AND INCLUDE THE FOLLOWING STANDARD EQUIPMENT. (SAP NO. 10024265)

MANUFACTURER	**FORD**	**CHEVROLET**
MODEL	F350SD-DRW CREW CAB	3500HD-DRW CREW CAB

SPECIFICATION	**MINIMUM REQUIREMENTS**
WHEEL BASE (INCHES)	167
OVERALL LENGTH (INCHES)	258
BOX LENGTH (INCHES)	96
GVWR (POUNDS)	11,400
APPROX. PAYLOAD (POUNDS)	4900
ENGINE DISPLACEMENT (LITERS)	5.4-V8
ENGINE HP	300
ENGINE TORQUE	365
TIRE/RIM SIZE	MFG. STANDARD

STANDARD EQUIP. NO	DESCRIPTION
1	AIR CONDITIONING (INCLUDES OPT 87)
29.1	BUMPER, O.E.M. STANDARD
37.1	COLORS, SOLID (OEM STANDARD)
59.1	FUEL TANK(S), 30 GALLON CAPACITY
71	MIRRORS, LOW MOUNT TYPE
77	STEERING, POWER
91	RADIO, AM/FM
128	TRANSMISSION, AUTOMATIC
132.1	OIL COOLER, TRANSMISSION
144	WIPERS, INTERMITTENT
200.1	HUB CAPS, OEM STANDARD
241	ANTILOCK BRAKING SYSTEM (OEM STANDARD)
253	CARGO AREA LIGHT

OPTIONAL EQUIPMENT:

OPT. NO.	DESCRIPTION
123.5	TOOL BOX LOW PROFILE (SAP NO. 10031611)
213.1	FACTORY INSTALLED TRAILER TOWING PACKAGE WITH RECEIVER HITCH (SAP NO. 10024274)
214	LIFT GATE (SAP NO. 10024275)
217	SPRAY IN PICKUP BED AND TAILGATE LINER RHINO TUFF-STUFF OR LINE X (SAP NO. 10024277)
249	HOUR METER (SAP NO. 10030565)
264	HEADACHE RACK (SAP NO. 10030180)

ITEM NO.	DESCRIPTION
15	SERIES 886D-LEV PICKUP, SIX PASSENGER CREW CAB, LONG BED, DUAL REAR WHEELS, 8-CYLINDER, DIESEL ENGINE, MUST MEET OR EXCEED THE FEDERAL LEV CERTIFICATION AND INCLUDE THE FOLLOWING STANDARD EQUIPMENT. (SAP NO. 10024255)

MANUFACTURER	**FORD**	**CHEVROLET**
MODEL	F350SD-DRW CREW CAB	CC3500HD-DRW CREW CAB

SPECIFICATION	**MINIMUM REQUIREMENTS**
WHEEL BASE (INCHES)	167
OVERALL LENGTH (INCHES)	258
BOX LENGTH (INCHES)	96
GVWR (POUNDS)	11,400
APPROX. PAYLOAD (POUNDS)	4900
ENGINE DISPLACEMENT (LITERS)	6.4L-V8
ENGINE HP	350
ENGINE TORQUE	650
TIRE/RIM SIZE	MFG. STANDARD

STANDARD EQUIP. NO	DESCRIPTION
1	AIR CONDITIONING (INCLUDES OPT 87)
29.1	BUMPER, O.E.M. STANDARD
37.1	COLORS, SOLID (OEM STANDARD)
59.1	FUEL TANK(S), 30 GALLON CAPACITY
71	MIRRORS, LOW MOUNT TYPE
77	STEERING, POWER
91	RADIO, AM/FM
128	TRANSMISSION, AUTOMATIC
132.1	OIL COOLER, TRANSMISSION
144	WIPERS, INTERMITTENT
200.1	HUB CAPS, OEM STANDARD
241	ANTILOCK BRAKING SYSTEM (OEM STANDARD)
253	CARGO AREA LIGHT

OPTIONAL EQUIPMENT:

OPT. NO.	DESCRIPTION
45	LIMITED SLIP DIFFERENTIAL (SAP NO. 10024258)
125.3	TOOL BOX LOW PROFILE (SAP NO. 10031606)
123.1	TOOL BOX (SAP NO. 10024292)
136.1	MANUFACTURER'S EXTENDED WARRANTY (SAP NO10024293)
213.1	FACTORY INSTALLED TRAILER TOWING PACKAGE WITH RECEIVER HITCH (SAP NO. 10024294)

ITEM NO 15 (CONTINUED)

SERIES 886D (CONTINUED

OPT. NO.	DESCRIPTION
217	SPRAY IN PICKUP BED AND TAILGATE LINER RHINO TUFF-STUFF OR LINE X (SAP NO. 10024297)
224.8	LIGHTBAR MINIFREEDOM WHELEN MODEL FT8AAAAP (SAP NO. 10024300)
243	COMBINATION HITCH, BUYERS PROD. NO. BH82000 W/PM87 HITCH MOUNT & HP6253 WC HITCH PIN TWO-BUYERS PROD. NO. B40 LASHING WELDED ON TOP OF BUMPER (OPT 213 OR 213.1 REQUIRED) (SAP NO. 10024301)
249	HOUR METER (SAP NO. 10024303)
256	INVERTER (SAP NO. 10024254)
264	HEADACHE RACK (SAP NO. 10030181)

ITEM NO. DESCRIPTION

16 **SERIES 932C-LEV, CAB & CHASSIS,** REGULAR CAB, GASOLINE, 60 INCH CA, 17,500 GVWR, DUAL REAR WHEELS, MUST MEET OR EXCEED THE FEDERAL LEV CERTIFICATION, INCLUDING THE FOLLOWING STANDARD EQUIPMENT
(SAP NO. 10025466)

MANUFACTURER	FORD	**CHEVROLET**
MODEL	F550 SD	C5500
SPECIFICATION		MINIMUM REQUIREMENTS
WHEEL BASE (INCHES)		128
CAB TO AXLE (INCHES)		60
APPROX. PAYLOAD (POUNDS)		11,090
GVWR (POUNDS)		18,000
ENGINE DISPLACEMENT (LITERS)		6.6L
ENGINE NET HP		330
ENGINE TORQ		450
TRANSMISSION, AUTOMATIC		AUTOMATIC
TIRE SIZE & LOAD RANGE		MFG. STANDARD
RIM SIZE (INCHES)		MFG. STANDARD

STANDARD EQUIP. NO	DESCRIPTION
1	AIR CONDITIONING, INCLUDES OPT. 87
37.1	COLORS, SOLID (OEM STANDARD)
59.3	FUEL TANK(S), 25 GALLON CAPACITY
71	MIRRORS, LOW MOUNT
77	STEERING, POWER
91	RADIO, AM/FM
128.1	AUTOMATIC TRANSMISSION
241	ANTILOCK BRAKING SYSTEM (OEM STANDARD)
247	CAB STEPS FOR ALL DOORS

OPT. NO. DESCRIPTION

128.1 AUTOMATIC TRANSMISSION WITH PTO PROVISION
(SAP NO. 10031346)

252.2 OPTIONAL CAB-TO-AXLE DIMENSION: 120 INCH CA
(SAP NO. 10025485)

16B **SERIES 21006 STATIONARY PLATFORM/STAKE BODY**,
192 INCHES LENGTH, 120 INCH CA, 96 INCHES OVERALL TO RUB RAILS
(SAP MATERIAL NO. 10031017)

OPTIONAL EQUIPMENT FOR SERIES 21006 STAKE BODY

OPT. NO.	DESCRIPTION
1	STAKE RACK SECTIONS (SAP MATERIAL NO. 10031018)
2	STEEL FLOORING (SAP MATERIAL NO. 10031019)
4.2	FOLDING LIFT GATE (SAP MATERIAL NO. 10013040)

ITEM NO.	DESCRIPTION
17	**SERIES 932D, CAB & CHASSIS,** REGULAR CAB, DIESEL, 60 INCH CA, 17,500 GVWR, DUAL REAR WHEELS, INCLUDING THE FOLLOWING STANDARD EQUIPMENT (SAP MATERIAL NO. 10013357)

MANUFACTURER	**FORD**	**CHEVROLET**
MODEL	F550 SD	C5500
SPECIFICATION		MINIMUM REQUIREMENTS
WHEEL BASE (INCHES)		128
CAB TO AXLE (INCHES)		60
APPROX. PAYLOAD (POUNDS)		11,090
GVWR (POUNDS)		18,000
ENGINE DISPLACEMENT (LITERS)		6.6L
ENGINE NET HP		300
ENGINE TORQ		520
TRANSMISSION, AUTOMATIC		AUTOMATIC
TIRE SIZE & LOAD RANGE		MFG. STANDARD
RIM SIZE (INCHES)		MFG. STANDARD

STANDARD EQUIP. NO	DESCRIPTION
1	AIR CONDITIONING, INCLUDES OPT. 87
37.1	COLORS, SOLID (OEM STANDARD)
59.3	FUEL TANK(S), 25 GALLON CAPACITY
71	MIRRORS, LOW MOUNT
77	STEERING, POWER
91	RADIO, AM/FM
128	AUTOMATIC TRANSMISSION
241.1	BRAKES, ABS FRONT AND REAR
247	CAB STEPS FOR ALL DOORS

OPT. NO.	DESCRIPTION
63	GRILL GUARD (SAP MATERIAL NO. 10025489)
128.1	AUTOMATIC TRANSMISSION WITH PTO PROVISION (SAP NO. 10030961)
224.4	STROBE LIGHT ROOF MOUNTED (SAP NO. 10025505)
224.8	LIGHTBAR, MINIFREEDOM, WHELEN MODEL FT8AAAAP (SAP MATERIAL NO. 10025496)
240	ELECTRONIC ENGINE SPEED CONTROL (SAP MATERIAL NO. 10025500)
249	ENGINE HOUR METER, ACTUATE WITH ENGINE RUNNING, DASH MOUNTED (SAP MATERIAL NO. 10025501)
252	OPTIONAL CAB-TO-AXLE DIMENSION: 84 INCH CA (SAP MATERIAL NO. 10025502)
N/A	AERIAL LIFT (SAP MATERIAL NO. 10030861)

OPTIONAL EQUIPMENT SPECIFICATIONS
FOR
AUTOMOBILES, VANS, UTILITY VEHICLES, AND LIGHT DUTY TRUCKS

ALL EQUIPMENT LISTED BELOW SHALL BE FACTORY-INSTALLED. IF AN ITEM IS NOT AVAILABLE AS FACTORY-INSTALLED, AFTER-MARKET EQUIPMENT MAY BE SUBSTITUTED FOR THAT ITEM.

OPTION NO.	OPTION DESCRIPTION
1.	**AIR CONDITIONING UNIT** - The unit shall be chassis factory installed and shall be an integral type (not mounted under the dash). The manufacturer's basic air conditioning package shall include a heavy-duty radiator (see Option No. 87). Air conditioning is standard (and therefore not an option) on all series.
2.	**AIR CONDITIONING/ HEATING UNIT, FRONT AND REAR** - The front unit shall be factory installed (no exceptions). The rear unit shall be furnished as a factory-installed combination unit, if available, or as an after-market auxiliary, providing that the unit does not interfere with the headroom requirement, and meets or exceeds the recommendations of, and is sanctioned by, the chassis manufacturer. The after-market auxiliary unit shall be fully warranted for a minimum of 12 months.
2.1	**AIR CONDITIONER UNIT,** rear - factory installed.
15.	**ALTERNATOR**: Manufacturer's heavy-duty increased capacity alternator SAE rated at 120 amperes minimum.
16.	**ALTERNATOR**: Manufacturer's heavy-duty alternator SAE rated at 130 amperes minimum.
24.	**BRAKES, POWER FRONT DISC –** Manufacturer's standard, power front disc brakes
29.1	**BUMPER, REAR,** OEM standard step type
37.1	**COLORS, SOLID** - selected from manufacturer's standard colors.
37.4	**COLOR: Yellow - Must be Federal Standard 595B, Color No. 13507** (Qty: 1-4) (No Substitutions Allowed)
37.5	**COLOR: Yellow - Must be Federal Standard 595B, Color No. 13507** (Qty: 5 or more) (No Substitutions Allowed)
45.	**DIFFERENTIAL, LIMITED-SLIP TRACTION TYPE** - The maximum traction type differential shall be Positraction, No-Spin, or equal
46.	**DOOR LOCKS**, power (all passenger doors). Manufacturer's standard
49.	**LARGER DISPLACEMENT GASOLINE ENGINE -** Next largest engine available
50.	**UPGRADE TRIM LEVEL TO LX TRIM FOR SERIES 374C FULL SIZE SEDAN:** Includes 16" Nine Spoke Aluminum Wheels, Electronic Automatic Temperature Control (Etc), Overhead Console With Dome Lamp And Compass, And Rear Seat Reading Lamps
52.	**FOUR-WHEEL DRIVE –** Four-wheel drive vehicles shall include automatic locking hubs and skid plates.
59.1	**TANK(S) FUEL,** to have a minimum total of **thirty-gallon capacity**.
59.2	**TANK(S) FUEL**, to have a minimum total of **thirty-six gallon capacity**.
59.3	**TANK(S) FUEL**, to have a minimum total of **twenty-five gallon capacity**.

OPTIONAL EQUIPMENT SPECIFICATIONS (Continued):

OPTION NO.	OPTION DESCRIPTION

63. **GRILLE GUARD, HEAVY-DUTY** - A heavy-duty grille guard designed to protect the headlamps and grille of a vehicle shall be mounted on the front of vehicle for which it is required. This guard shall be bolted to the bumper with a minimum of two bolts, lock nuts, and washers on each side. Thread-forming bolts or screws are not acceptable. It shall be treated in a chemical bath or dip, or similarly treated for rust prevention prior to application of the final paint coating. The grille guard furnished must be approved by the City Purchasing Agent, in writing, if other than the following:

- Brushguard Model BG – manufactured by Marks Machine, 1101 N. Blue Creek Road, El Campo, TX 77437
- Jumbo Flush Guard Model 500 - manufactured by The Perry Company, P.O. Box 7187, Waco, TX 76714
- Grille Guard Model GG- manufactured by Brown Welding & Mfg., New Braunfels TX 78130
- Grille Guard Model BG-500 - manufactured by Spillar Custom Hitches, Austin, TX 78759

71. **MIRROR, REARVIEW, EXTERIOR, LOW MOUNT TYPE, LEFT AND RIGHT SIDES** - manufacturer's low mount (below eye level, wide view-type mirror), two or three point mounting. Mirror shall meet or exceed the requirements of FMVSS No. 111 and shall have a face size approximately 6" by 9"with an adjustable low-mount bracket. **Extension arms are required on chassis-cab units.**

72. **MIRRORS, REARVIEW, EXTERIOR, TRAILER-TOW-TYPE, EXTENDABLE MANUAL**

73. **MIRRORS, REARVIEW, EXTERIOR, MATCHING LEFT AND RIGHT SIDES** - Each mirror shall have a minimum viewing area of 12 square inches and shall be factory or dealer installed. **Left side mirror shall be remote-control type.**
NOTE: WHEN A SPOTLIGHT IS ALSO SPECIFIED, THE LEFT-SIDE MIRROR SHALL BE MOUNTED TO THE REAR OF THE SPOTLIGHT AND THE OPERATION OF THE TWO SHALL NOT CONFLICT.

73.2 **MIRRORS, REARVIEW, EXTERIOR, MATCHING LEFT AND RIGHT SIDES** - Each mirror shall have a minimum viewing area of 12 square inches and shall be factory or dealer installed. **POWER remote control on both left and right sides.**
NOTE: WHEN A SPOTLIGHT IS ALSO SPECIFIED, THE LEFT-SIDE MIRROR SHALL BE MOUNTED TO THE REAR OF THE SPOTLIGHT AND THE OPERATION OF THE TWO SHALL NOT CONFLICT.

77. **STEERING, POWER** - manufacturer's standard.

87. **RADIATOR, HEAVY-DUTY TYPE** - Radiator shall be furnished with the same capacity offered by the manufacturer for the Series when factory air conditioning is supplied. Heavy-duty radiators **are required** with all air conditioning options.

91. **RADIO, AM-FM -** Radio shall be a chassis factory-installed standard brand AM-FM transistor radio. Antenna, which may be an integral part of the windshield, shall be furnished and mounted.

97. **SEAT PASSENGER** (for Cargo Vans)

99. **REAR SEAT** (for Utility and Carryall Vehicles) - additional seat to increase total seating capacity to 8 or more.

103. **SHOCK ABSORBERS, HEAVY-DUTY** - Shock absorber shall be the manufacturer's heavy-duty type in lieu of the regular-duty shock absorbers.

107. **SPARE WHEEL and TIRE, FULL SIZE CONVENTIONAL TYPE, MOUNTED, IN LIEU OF SPACE SAVING TIRE.** JACK, HANDLE and LUG WRENCH TO BE INCLUDED. Conventional spare tire and wheel shall be IDENTICAL IN BRAND NAME AND TYPE AND SIZE OF TIRE AND WHEEL to those on the vehicle front wheels.
NOTE: IF THIS OPTION IS ORDERED, A SPACE SAVING TIRE SHALL NOT BE DELIVERED WITH THE VEHICLE.

107.1 **SPARE WHEEL AND TIRE, Same as Option 107, except with lockable wheel carrier,** including locking device.

OPTIONAL EQUIPMENT SPECIFICATIONS (Continued):

OPTION NO.	OPTION DESCRIPTION

111A **SPOTLIGHT, CHROME must** be Unity 325 halogen or City-approved equal, and shall have a 6-inch diameter white lens for current model vehicle. It shall be mounted on the left side of the windshield post or quarter panel, either by the chassis manufacturer or by means of an approved bracket. The local installation, if required, shall be accomplished in a workmanship-like manner. The spotlight and the exterior rearview mirror shall not conflict.

111.1 **SPOTLIGHTS** – same as Option 111A, except dual, pillar or door mounted on left & right sides.

115. **STEERING WHEEL, TILT,** manufacturer's standard.

116. **CRUISE CONTROL** (includes Option 115, tilt steering wheel)

TOOLBOXES - STEEL, CROSSOVER TYPE AND SIDE-BOXES:
The toolboxes furnished must be approved by the City Purchasing Agent, in writing, if other than the following RKI or Weather-Guard brands and Model Numbers listed below.

122.1 **CROSS-BOX** – RKI Model C63 or Weather-Guard 126-3-01 for full size pickups.

122.2 **CROSS-BOX** – RKI Model C56 or Weather-Guard 136-3-01 for mini-pickups.

122.3 **SIDE BOX** – RKI Model 61S or Weather-Guard 175-3-01.

122.4 **SIDE BOX** – RKI Model 43S or Weather-Guard 185-3-01.

TOOL BOXES - ALUMINUM, CROSSOVER TYPE AND SIDE BOXES:
The toolboxes furnished must be approved by the City Purchasing Agent, in writing, if other than the following RKI or Weather-Guard brands and Model Numbers listed below.

123.1 **CROSS-BOX** – RKI Model C63A or Weather-Guard Model 127-0-02 for full size pickups.

123.2 **SIDE BOX** – RKI Model 67SA or Weather-Guard Model 174-0-01 for mini pickups.

123.3 **SIDE BOX** – RKI Model 50SA or Weather-Guard Model 184-0-01.

123.5 **CROSS-BOX, LOW PROFILE –** RKI Model C63LPA or Weather-Guard Model 121-0-01 for full size pickups.

127 **TRANSMISSION, MANUAL,** manufacturers standard for the engines furnished for all series

127.1 **TRANSMISSION, MANUAL with PTO provisions,** manufacturer's standard for the engines furnished for all series

128. **TRANSMISSION, AUTOMATIC,** manufacturer's standard for the engines furnished for all series

128.1 **TRANSMISSION, AUTOMATIC WITH PTO PROVISION,** manufacturer's standard for the engines furnished for all series

128.2 **TRANSMISSION, CVT** – Continuous Variable Transmission, manufacturer's standard for the engines furnished for all series

128.3 **TRANSMISSION, AUTOMATIC HYBIRD –** Manufacturer's standard for the engines furnished for hybrid series

129. **AUXILIARY IDLE CONTROL KIT**

132.1 **AUTOMATIC TRANSMISSION OIL COOLER**, heavy duty, auxiliary, externally mounted only, OEM if available.

OPTIONAL EQUIPMENT SPECIFICATIONS (Continued):

OPTION NO.	OPTION DESCRIPTION
136.1	**WARRANTY, MANUFACTURER'S EXTENDED (NO EXCEPTIONS) FOR VEHICLES AND CABS & CHASSIS** - shall extend the manufacturer's standard warranty, as specified herein, **to a total period of six years and 75,000 miles**, whichever comes first, **with $200.00 deductible**. Ford – Premium Extended Service Plan General Motors – Major Guard Extended Service Plan Daimler Chrysler – Maximum Care Upgrade
136.2	**WARRANTY, MANUFACTURER'S EXTENDED (NO EXCEPTIONS) FOR VEHICLES AND CABS & CHASSIS** - shall extend the manufacturer's standard bumper-to-bumper warranty, as specified herein, **to a total period of six years and 100,000-miles**, whichever comes first, **with $200.00 deductible**.
136.3	**WARRANTY, MANUFACTURER'S EXTENDED (NO EXCEPTIONS) FOR VEHICLES AND CABS & CHASSIS** – shall extend the manufacturer's standard warranty, as specified herein, **to a total period of four years and 100,000 miles**, whichever comes first, **with $200.00 deductible.**
140.1	**WINDOW TINT,** darkest maximum tint allowed by State Law, whether factory or dealer installed.
140.2	**WINDOW TINT FOR POLICE DEPARTMENT.** Tint Shade No. 20, Installed by Dealer, for all glass except front windshield. Front windshield shall be darkest maximum tint allowed by State Law, whether factory or dealer installed.
144	**WINDSHIELD WIPERS, INTERMITTENT-TYPE,** with integral windshield washer - must be manufacturers standard, factory-installed.
145	**WINDSHIELD WIPER, REAR WINDOW,** limited availability with Integral Washer (N/A with panel doors)
149	**REAR DOOR GLASS -** (For Cargo Vans - glass must be factory installed; no dealer-installed glass is acceptable)
151	**GLASS IN ALL DOORS** - must be factory installed; no dealer-installed glass is acceptable.
153	**GLASS IN EACH DOOR AND SIDE PANEL (NOTE: SAME AS WINDOW VAN)**
200	**WHEEL COVERS,** OEM standard, set of four.
200.1	**HUBCAPS,** OEM Standard, set of four.
201	**UPGRADE TIRES AND WHEELS**
201.1	**UPGRADE TIRES AND WHEELS FOR POLICE DEPARTMENT,** with 16 inch, 9-spoke aluminum wheels and tires
204	**SINGLE KEY LOCKING**, each vehicle keyed separately, four complete sets of keys per vehicle (to include remotes as available).
205	**CLOTH UPHOLSTERY,** front and rear w/split front seat (50/50, 55/45, 45/45).
206	**REMOVABLE REAR PASSENGER SEATS,** for passenger vans.
207	**POWER WINDOWS,** manufacturer's standard
208	**REAR WINDOW DEFROSTER INCLUDING REAR WIPERS WHEN AVAILABLE.**
209	**POWER DOOR LOCKS / POWER WINDOWS COMBINATION feature,** manufacturers standard
210	**SPECIAL SEATING REQUIREMENT**: Hi-back front bucket seats, less large center console and one (1) only center bench seat for three passengers. All seating shall be of identical material.

OPTIONAL EQUIPMENT SPECIFICATIONS (Continued):

OPTION NO.	OPTION DESCRIPTION
211	**CLOTH SEAT(S), OEM STANDARD**
212	**HEAVY-DUTY SUSPENSION W/FRONT STABILIZER BARS.**
213	**RECEIVER HITCH, Class III, with ball mount, pin & clip and 2" chrome ball. Reinforced to the frame. To include TRAILER CONNECTION, OPTION 244.**
213.1	**FACTORY INSTALLED TRAILER TOWING PACKAGE** with receiver hitch, HD suspension, HD alternator and transmission oil cooler. Ball mount, pin & clip, 2" chrome ball mounted to receiver hitch and **TRAILER CONNECTION, OPTION 244** shall also be provided (either factory installed if available or dealer installed).
213.2	**TRAILER TOWING PACKAGE INCLUDING** 7-Wire Harness, Trailer brake wiring kit, Trailer Tow Guide (either factory installed if available or dealer installed).
213.3	**FACTORY INSTALLED TRAILER TOWING PACKAGE FOR 4-WD** with receiver hitch, HD suspension, HD alternator and transmission oil cooler. Ball mount, pin & clip, 2" chrome ball mounted to receiver hitch and TRAILER CONNECTION, OPTION 244 shall also be provided (either factory installed if available or dealer installed).
214	**LIFTGATE, 1,300 lb. capacity,** single unit electric/hydraulic with 4 inch loading ramp as part of platform.
214.1	**LIFTGATE, FOLD-DOWN TYPE:** • **Ford & Chrysler Vans – 1,000-lb. capacity, single unit electric/hydraulic with 4 inch loading ramp as part of platform** • **Chevrolet/GMC Vans – 650-lb. capacity, fold down loading ramp**
214.2	**LIGHT KIT FOR OPTION 214 OR OPTION 214.1**
214.5	**LIFTGATE, 1,000 lb. capacity,** single unit electric/hydraulic with 4 inch loading ramp as part of platform.
215	**CARPET ONLY** front and rear.
216	**PICKUP BED AND TAILGATE LINER, POLYURETHANE,** over the rail design where applicable, heavy-duty, single piece and specifically designed for model pickup proposed.
217	**SPRAY IN BED AND TAILGATE LINER**, Over the rail spray on Chevrolet and Dodge Models, Must be Rhino-Linings Tuff-Stuff or Line-X. 1/4" bed and 1/8" walls. Black in color. Lifetime warranty. (No Substitutions Allowed)
223	**OPTIONAL DIFFERENTIAL RATIO,** Contractor/Supplier shall supply an optional differential ratio compatible with the engine/transmission combination in lieu of the vehicle's standard differential.
224.4	**STROBE LIGHT, LOW PROFILE,** mounted on roof. Lighted switch mounted on dash in a convenient location. Strobe Lights must meet the J1318 standards and be listed with AMECA. Double-flash, minimum five joules, maximum height 5" amber in color, 1-year warranty on bulb and 2-1/2-year warranty on power supply, Whelen Model No. 2012P, Target Tech Model SY420200, Nova Model SB4050A, or City approved equal.
224.5	**REMOTE CONTROL SPOTLIGHT ROOF-MOUNTED,** Signal STAT Model 730W or City-approved equal.
224.6	**SPOTLIGHTS, DUAL, REMOTE CONTROL ROOF-MOUNTED**, Signal STAT Model 730W or City-approved equal.

OPTIONAL EQUIPMENT SPECIFICATIONS (Continued):

OPTION NO. OPTION DESCRIPTION

224.7 LIGHTBAR AND SIREN PACKAGE, Whelen Model No. A175384935

All amber lenses except clear lenses on alley lights and take down lights. Unit shall be mounted, wired and ready for service. (NO SUBSTITUTIONS ALLOWED)

Consists of:

FL2AAAA	55" Freedom LED Lightbar, with Four Corner LEDS
FLDAA	Pair of Amber Inboard LEDS
FLDAA	Pair of Amber Inboard LEDS
FLH2CC	Pair Take Down Lights
FLALY	Pair Alley Lights
SA314A	Siren Speaker with Mounting Bracket (Mdl. No. Varies with Vehicle)
295HFS4	Remote Siren Amplifier with 9-Switch Light Control and Microphone (Surface Mount Head)

224.8 LIGHT BAR, MINIFREEDOM LED, shall be Whelen Model FT8AAAAP

With all amber lenses permanently mounted, wired, fused and high-low power switch to be fully operational. Switch to be high/low density type and placed in cab of unit in an easily reachable location proximate to the driver. (No Substitutions Allowed)

224.9 LIGHT PACKAGE FS-CHVHFD, includes the following parts and installation of same:

MANUFACTURER	PART #	DESCRIPTION	QUANTITY
Whelen	MBPS07JJ	Mirror Beams	1
Whelen	S690CCCC	Corner Strobes	1
Whelen	295HFSC9	Siren	1
Whelen	SA315P	Speaker	2
Whelen	SAK1	Speaker Bracket	2
Setina	PB400	Push Bumper	1
Whelen	RBKT2	TIR3 Housing	2
Whelen	RSR03ZCR	TIR3 Red LED	2
Whelen	RSB03ZCR	TIR3 Blue LED	2
Whelen	UHF2150A	Head Light Flasher	1
Whelen	FL2RRRR	Freedom lightbar, red outboards	1
Whelen	FLDAA	Freedom opt. add 2 led amb/amb	1
Whelen	FLDCC	Inboard LED's in lightbar	1
Whelen	FLDRR	add 400 series liner led flashers, 2/red over red	3
Whelen	9592	Opticom (3M)	1
Whelen	9UOPT155	Wiring for Opticom	1
Whelen	SLPMMRB	Slimlighter for rear window	2
Havis Shield	C-1400	Havis Console	1
Havis Shield	C-TM-GMC	Track mount 32" Base Assembly 00-04	1
Havis Shield	CB-1	Armrest with 3 outlet plugs	1
SMC	CPUBRK-2	CPU Mount	1
SMC	MP410-STL	Multi-Position Plate	1
Havis Shield	C-SW-3	Switch Box	1
Whelen	ULF44	Flasher	1
Whelen	40RC5SCR	400 LED	6
Whelen	4TSMAC	400 Flange	6
Progard	W-3500	Petition screen	1

Supplier Contact Information:

http://www.whelen.com/ **http://www.pro-gard.com/** **http://www.setina.com/**
http://www.smc-corp.com/ **http://www.havis.com/**
Fleet Safety / Wayne Jacobs / 713-228-8900 / http://www.fleetsafety.com/

District Chief Tommy Dowdy, 713.247.5044, shall be contacted prior to installation for wiring and mounting instructions.

OPTIONAL EQUIPMENT SPECIFICATIONS (Continued):

OPTION NO.	OPTION DESCRIPTION
229	**SLIDING SIDE DOOR.**
229.1	**HINGED SWING-OUT DOORS, SIDE.**
229.2	**DUAL SLIDING SIDE DOORS WITH WINDOWS, LEFT & RIGHT SIDES**
233	**CREW CAB CONFIGURATION, including *56*" CA.**
233.1	**CREW CAB CONFIGURATION, including 60" CA.**
236	**BODY SIDE MOLDING** - factory installed.
238	**FLOOR MATS,** Carpeted, Front and Rear, Manufacturer's Standard for Vehicle Series Specified
239	**RUBBER FLOOR COVERING,** front and rear with pad for passenger vans.
240	**ELECTRONIC ENGINE IDLE SPEED CONTROL, OEM WHEN AVAILABLE**.
241	**ANTILOCK BRAKING SYSTEM (OEM STANDARD)**
241.1	**ANTILOCK BRAKING SYSTEM, FRONT AND REAR**
242	**ROLLING DECK, Weatherguard Bed Rat Sliding Platform for specified vehicle series**
243	**COMBINATION HITCH, Must Be** Buyers Products No. BH820000 with PM87 hitch mount and HP6253 WC hitch pin (IF ORDERING THIS OPTION, DEPARTMENT MUST ORDER OPTION 213 OR 213.1). (No Substitutions)
243.1	**REPLACEMENT BALL, Must Be Buyers Products No. RB2516** (No Substitutions Allowed)
244	**TRAILER CONNECTION**, female type six-way, mounted and wired.
247	**CAB STEPS FOR CABS & CHASSIS,** all doors, mounted, manufacturers' standard for designated vehicle series.
248	**ALARM, ELECTRONIC BACKUP,** SAE Class C, 97db sound level , 6.36 DC volt, approx. 4" length x 3'width x 1.5" height. Federal Signal No. 256 or City approved equal.
249	**HOUR METER**, Hobbs Model 85094, or City approved equal, under-dash mounted, will actuate only with engine running.
250	**DUAL BATTERIES,** 630 CCA each.
250.1	**BATTERY**, ADDITIONAL HEAVY DUTY, minimum 700 CCA, must be compatible and wired to operate in conjunction with OEM heavy duty battery.
251	**ELECTRIC BRAKE CONTROLLER**, Tekonsha Model 9035 or City approved equal, installed and mounted in an accessible location on the dash area of the vehicle and including a female six-way electrical connector mounted on the rear bumper of the vehicle.
252	**OPTIONAL cab-to-axle dimension, 84" CA.**
252.1	**OPTIONAL cab-to-axle dimension, 108" CA.**
252.2	**OPTIONAL cab-to-axle dimension, 120" CA.**
253	**CARGO AREA LIGHT**, small to illuminate pickup bed area.

OPTIONAL EQUIPMENT SPECIFICATIONS (Continued):

OPTION NO.	OPTION DESCRIPTION
256	**INVERTER, 1400 WATTS, 20 AMPS, 12 VOLT DC TO 110 VOLT AC,** Vanner Model IT12-1400, Dimensions Model DUI-12/1800N or City-approved equal
259	**AUXILIARY CNG TANK,** bed-mounted horizontally, transverse, immediately behind cab.
259.1	**ADDITIONAL CNG TANK(S) -** to be mounted on to underbody of vehicle.
260	**PRISONER TRANSPORT COMPARTMENT CONVERSION** **MANUFACTURER: DEERSKIN MANUFACTURING, INC. MODEL: PTV-2HM** **PHONE: 800-880-6089 FAX: 817-523-6685** Outside dimensions: 120” long x 26” wide x 52” high Modular Unit bolts together inside cargo van Double walled and insulated for noise reduction Galvanized steel framing Washable with floor drains 1/8” Diamond Plate aluminum floor and door panels Lighted interior Sliding window in front wall Folding rear step Adaptable to factory rear air conditioning and **t**ransferable to another vehicle Emergency exit sliding window in front wall (36” wide x 20” high) Removable panel in center partition to assist in emergency escape
260	**PRISONER TRANSPORT COMPARTMENT CONVERSION** **MANUFACTURER: DEERSKIN MANUFACTURING, INC. MODEL: PTV-2HM** **PHONE: 800-880-6089 FAX: 817-523-6685** Outside dimensions: 120” long x 26” wide x 52” high Modular Unit bolts together inside cargo van Double walled and insulated for noise reduction Galvanized steel framing Washable with floor drains 1/8” Diamond Plate aluminum floor and door panels Lighted interior Sliding window in front wall Folding rear step Adaptable to factory rear air conditioning and **t**ransferable to another vehicle Emergency exit sliding window in front wall (36” wide x 20” high) Removable panel in center partition to assist in emergency escape
260.1	**PRISONER TRANSPORT COMPARTMENT CONVERSION** **MANUFACTURER: DEERSKIN MANUFACTURING, INC.** **MODEL: PTV-3HM PHONE: 800-880-6089 FAX: 817-523-6685** 2 rear compartments dimensions 90” long x 26” wide x 52” high 1 front compartment dimensions 30” front to back x 48” wide x 52” high Modular Unit bolts together inside cargo van Double walled and insulated for noise reduction Galvanized steel framing Washable with floor drains 1/8” Diamond Plate aluminum floor and door panels Lighted interior Sliding window in front wall Folding rear step Adaptable to factory rear air conditioning and **t**ransferable to another vehicle Emergency exit sliding window in front wall (36” wide x 20” high) Emergency exit hatch (solid) located between front compartment and rear compartments Removable panel in center partition to assist in emergency escape

OPTIONAL EQUIPMENT SPECIFICATIONS (Continued):

OPTION NO.	OPTION DESCRIPTION

261 ALUMINUM BULKHEAD WITH SLIDING PLEXIGLASS WINDOW, 24" X 36" (FABRICATE AND INSTALL). Will slide to the left only. Bulkhead to have two lower sliding vent Plexiglas windows, 12" x 12". Interior is to be lined with 3/4" No. 9 flat expanded metal including bulkhead, slides, top and doors. Floor area to be covered with ½" plywood sealed with water sealant and covered with a no-slide surface. Benches will be installed down both sides, front & rear. Right side to have access from side door. Rear will be only across left door. Benches will be made with 2" X 12" sanded & varnished oak plank and welded structural aluminum angle securely attached to body. Auxiliary locking device on both sides and rear doors. Interior lock mechanism is to be disabled. Two roof mounted air vents mounted behind bulkhead for ventilation. One vent on rear door opposite from exhaust pipe. Fabricated step below factory bumper for easy access. Door glass installed in right rear door.

262 BULKHEAD PARTITION, Screen, Swing Door for Full Size Van, with hinge kit, Weatherguard Model 86500-3-010 or City Approved Equal

264 CAB PROTECTOR (HEADACHE RACK), Must Be RKI Model Nos. as follows: **(No Substitutions Allowed)**

A. WG2 for narrow bed pickup
B. WG3 for Chevrolet and Dodge compacts
C. WG10 for full size wide bed domestics
D. WG11 super duty pickup
E. WG14 Ford compact

265 WINCH, electric, 8,000 lb. capacity, 12 volt, 124:1 gear ratio with 150 ft. 3/16" wire rope and clevis hook. 2.5 HP motor, reversible providing power in/power out operation with manual clutch, automatic disc brakes, and sealed factory lubricated gear and remote control. Unit to be mounted with bumper kit including guard and four-way fair lead roller.

265.1 ACCESSORY KIT for Option No. 265 above shall include the following:

A. 6' choker chain
B. Wire choker rope, 5/16" X 10'
C. 3" X 8' tree protector, nylon strap
D. Snatch block
E. 3/4" X 15' tow strap
F. Vinyl winch cover with tie downs

N/A LIFT, AERIAL ARTICULATED TELESCOPIC PLATFORM

1. Manufacturer's reference model VERSALIFT SST-40-EIH or City approved equal.

2. Working height and reach: 45 foot working height and 27ft. 9in horizontal reach.

3. Platform: Fiberglass 24"x30"x42" deep with inside and outside step for easy access.

4. Personnel Restraint System: A safety harness and lanyard anchored to upper platform support

5. Single Stick Upper Control: A Unitrol single-stick control with multi-jointed handle which operates the control valve. A safety trigger located on the underside of the single-stick handle will not allow boom movement until it is depressed.

6. Individual Lower Controls: Individual full-pressure controls at the turret actuate all boom functions. The lower control station is equipped with a selector valve to override the upper controls.

7. Platform Rotation: Provides 180 degree hydraulic platform rotation. This option may affect stability and the maximum available platform capacity is reduced to 350 lbs.

8. Hydraulic Platform Leveling: Platform leveling is controlled by a master and slave cylinder arrangement. The platform leveling system can be activated from the upper controls to adjust the platform leveling, tilt the platform for cleaning, or to ease the removal of an injured operator.

OPTIONAL EQUIPMENT SPECIFICATIONS (Continued):

OPTION NO. OPTION DESCRIPTION

9. Hydraulic Tool Circuit at the Platform: This system is designed to use open-center hydraulic tools. The tool circuit provides 5 gpm at 2250 psi.

10. Outer/Inner Boom Assembly: The outer/inner boom assembly includes an outer boom, telescopic inner boom, extension cylinder, a hose carrier system, and slide pads mounted on the inner and outer boom. The outer boom consists of a 6" x 8" rectangular steel section and a 7.5" x 9.5" steel section (ELECTROGARD) that maintains a 42" insulation gap with the inner boom full retracted without ELECTROGARD. The 5" x 7" rectangular fiberglass inner boom is housed within the outer boom. The extension system consists of a hydraulic cylinder, two integral holding valves, and a hose carrier housed entirely within the boom assembly. The hoses routed through the outer/inner boom assembly are non-conductive and fully contained within the boom assembly. The outer/inner boom assembly articulates from 14 degrees below horizontal to 74 degrees above horizontal. Actuated by a double acting cylinder with a holding valve, the outer/inner boom assembly is offset to one side to provide easy access to the platform. A molded rubber boom-support cradle supports the boom when stowed, without the need for a tie-down strap.

11. Compensated Lower Boom: The lower boom consists of a 6" square steel section. The SST-40 lower boom articulates from 5 degrees below horizontal to vertical for a total travel of 95 degrees. A compensation link forms a parallelogram linkage to maintain the outer/inner boom assembly at a constant angle to the turret.

12. Paint: The complete unit is to be primed and painted before assembly.

N/A **AUTOMOTIVE LIFT KIT & SPACER WITH INSTALLATION,** IIIrd Coast 14" front crossmember drops, upper control arm drops, dual shock mounts on front, single shock on rear, Bilstein 100 for both front and rear, soft ride 14" rear springs, heavy duty hyme joint steering conversion, assisted steering drops, and Cv joint front drive shaft or City approved equal.

N/A **AUTOMOTIVE WHEELS,** 40 x 15.50 x 20 Toyo Open country M/T with 20 x 10 XD Series wheels or City approved equal.

SPECIFICATIONS
FOR
3/4 1 TON SINGLE OR DUAL WHEEL UTILITY SERVICE BODIES

1.0 GENERAL:

1.1. All bodies offered under this Invitation to Bid shall conform to all applicable specifications listed herein.

1.2 All service bodies shall be made with Galvaneal Steel.

2.0 FLOOR

2.1 Standard Treadplate, minimum 12 gauge

3.0 CROSSMEMBERS CSHAPED:

3.1 Front and rear, 10 gauge

3.2 3/4 ton body with intermediate cross members with minimum 2 braces, 10 gauge

3.3 One-ton body with intermediate cross members with minimum 3 braces, 10 gauge

3.4 Intermediate cross sill extension with minimum of 2 sill extensions, 10 gauge

4.0 LONGITUDINAL FLOOR STIFFENERS:

4.1 Hat channel shape, minimum 3 each, 14 gauge

5.0 SIDE AND ENDS:

5.1 Sides, ends, and all skin panels shall be minimum 16 gauge

6.0 TOP OF BODY:

6.1 Top of body panel with longitudinal corrugation or internal support, 16 gauge

6.2 Opening-type, 16 gauge with two safety mechanical lid props or gas cylinder

7.0 DOORS:

7.1 Double panel, 20 gauge

7.2 Opening restraints, chain or cable or spring tensioner on all doors, one on vertical and two on horizontal

7.3 Hinges, OEM standard, bolted or riveted preferred.

7.4 Locks, T-handle, D-ring or paddle-latch type, mechanical shaft linkage, no chain or cable. All locks for one body shall be keyed alike.

7.5 Each body shall be keyed differently.

7.6 Seals shall be compression-type on all doors, automotive type.

8.0 PAINT:

8.1 On the outside of the body only, the supplier shall use acrylic enamel with hardener.

8.2 Bodies shall come from factory with a rust preventative primer.

SPECIFICATIONS FOR UTILITY SERVICE BODIES (Continued):

8.0 PAINT (CONTINUED)

8.3 Body shall be the same color as cab.

8.4 Any welding done at supplier's shop shall be refinished with the same type of primer. Inside of compartments shall include doors to be painted with a light color primer. If galvanized shelving is used, primer shall not be required.

9.0 SHELVES:

9.1 Shall be 18 gauge galvanized steel.

9.2 Front vertical, two (2) per side with 4" spacing for dividers and 20 dividers per unit.

9.3 Rear, two (2) trays per side slotted with dividers.

9.4 Horizontal, one (1) per side, OEM standard on dividers.

10.0 LIGHTS:

10.1 All lights and reflectors required by law.

10.2 To include back-up lights, license plate bracket and light.

10.3 Stick-on reflectors will be acceptable. Shall be 3M Products (no substitutions allowed).

10.4 Tail and back-up lights shall be OEM standard rubber-mounted with light mount.

10.5 All lights shall be attached with 3/16 aluminum "pop" rivets.

11.0 MOUNTING:

11.1 Necessary frame extension may be welded in place provided such work is confined to the area behind the rear spring hanger and does not void the CHASSIS manufacturer's frame warranty.

11.2 No wood spacers shall be permitted.

12.0 REAR OF BODY:

12.1 No open space shall be allowed between the top of bumper and load space area.

13.0 BUMPER:

13.1 Manufacturer’s standard service body bumper will be provided

SPECIFICATIONS FOR UTILITY SERVICE BODIES (Continued):

OPTIONAL EQUIPMENT FOR UTILITY SERVICE BODIES

OPT. NO.	OPTION DESCRIPTION
2.1	OVERHEAD LADDER RACKS WITH ADJUSTABLE BRACKET
2.2	SIDE-MOUNTED LADDER RACKS (Note: Not available with Option No. 2.20)
2.3	LADDER RACK W/ CONDUIT CARRIER, 6" x 6" BOXED ENDS FOR 10-FOOT CONDUIT (PASSENGER SIDE), MOUNTED ON BODY EXTENDING FORWARD TO CLEAR CAB, BRACED FROM FRONT TO REAR WITH 1-INCH PIPE BELOW RADIUS ON EACH SIDE.
2.5	VISE RACK WITH PIPE HANGER
2.6	TELESCOPING TOP WITH TAILGATE ENCLOSURE
2.7	REAR BUMPER, 8 INCH, MANUFACTURER'S STANDARD FOR BODY SPECIFIED. BUMPER SHALL BE MANUFACTURED WITH TREADPLATE OR EQUAL. MUST BE CAPABLE OF PULLING 5,000 LBS. WITH TONGUE WEIGHT OF 500 LBS. BUMPER SHALL INCLUDE THE FOLLOWING ITEMS: ONE (1) PINTLE HITCH MOUNTED, EITHER A HOLLAND MODEL PH-16-B WITH 2" BALL OR A MODEL PH-16-BA WITH 2-5/16" BALL, AS SPECIFIED BY CITY DEPARTMENT AT TIME OF ORDER; TWO (2) 1" OD "D" RINGS, BUYERS NO. B48 OR EQUAL, ONE (1) MOUNTED ON EACH SIDE OF THE PINTLE HITCH; MOUNT THE VEHICLE CONNECTOR IF EQUIPPED.
2.8	REAR BUMPER, 8 INCH, MANUFACTURER'S STANDARD FOR BODY SPECIFIED. BUMPER SHALL BE MANUFACTURED WITH "GRIP STRUT" OR EQUAL. MUST BE CAPABLE OF PULLING 5,000 LBS. WITH TONGUE WEIGHT OF 500 LBS. BUMPER SHALL INCLUDE THE FOLLOWING ITEMS: ONE (1) PINTLE HITCH MOUNTED, EITHER A HOLLAND MODEL PH-16-B WITH 2" BALL OR A MODEL PH-16-BA WITH 2-5/16" BALL, AS SPECIFIED BY CITY DEPARTMENT AT TIME OF ORDER; TWO (2) 1" OD "D" RINGS, BUYERS NO. B48 OR EQUAL, ONE (1) MOUNTED ON EACH SIDE OF THE PINTLE HITCH; MOUNT THE VEHICLE CONNECTOR IF EQUIPPED.
2.9	REAR BUMPER, 12 INCH, MANUFACTURER'S STANDARD FOR BODY SPECIFIED. BUMPER SHALL BE MANUFACTURED WITH TREADPLATE OR EQUAL. MUST BE CAPABLE OF PULLING 5000 LBS. WITH TONGUE WEIGHT OF 500 LBS. BUMPER SHALL INCLUDE THE FOLLOWING ITEMS: ONE (1) PINTLE HITCH MOUNTED, EITHER A HOLLAND MODEL PH-16-B WITH 2" BALL OR A MODEL PH-16-BA WITH 2-5/16" BALL, AS SPECIFIED BY CITY DEPARTMENT AT TIME OF ORDER; TWO (2) 1" OD "D" RINGS, BUYERS NO. B48 OR EQUAL, ONE (1) MOUNTED ON EACH SIDE OF THE PINTLE HITCH; MOUNT THE VEHICLE CONNECTOR IF EQUIPPED.
2.10	REAR BUMPER, 12 INCH, MANUFACTURER'S STANDARD FOR BODY SPECIFIED. BUMPER SHALL BE MANUFACTURED WITH "GRIP STRUT" OR EQUAL. MUST BE CAPABLE OF PULLING 5000 LBS. WITH TONGUE WEIGHT OF 500 LBS. BUMPER SHALL INCLUDE THE FOLLOWING ITEMS: ONE (1) PINTLE HITCH MOUNTED, EITHER A HOLLAND MODEL PH-16-B WITH 2" BALL OR A MODEL PH-16-BA WITH 2-5/16" BALL, AS SPECIFIED BY CITY DEPARTMENT AT TIME OF ORDER; TWO (2) 1" OD "D" RINGS, BUYERS NO. B48 OR EQUAL, ONE (1) MOUNTED ON EACH SIDE OF THE PINTLE HITCH; MOUNT THE VEHICLE CONNECTOR IF EQUIPPED.
2.11	CENTRAL LOCKING SYSTEM, O.E.M. STANDARD, INTERNAL, BOTH SIDES.
2.12	TREADPLATE, 3/16" FOR FLOOR
2.13	RHINO LININGS TUFF-STUFF OR EQUAL ANTISLIP COVERING FOR FLOOR
2.14	OPTIONAL TREADPLATE OVERLAY OF INSIDE OF BODY, 16 GAUGE

SPECIFICATIONS FOR UTILITY SERVICE BODIES (Continued):

OPTIONAL EQUIPMENT FOR UTILITY SERVICE BODIES (Continued):

OPT. NO.	OPTION DESCRIPTION
2.15	OPTIONAL TREADPLATE OVERLAY OF TOP OF BODY PANEL, 16 GAUGE (Note: Not available with Option No. 2.20)
2.16	RHINO LININGS TUFF-STUFF OR EQUAL ANTISLIP COVERING FOR OPTION 2.15
2.17	(STD) LOCKING WATER COOLER HOLDER. MOUNTED INSIDE REAR VERTICAL COMPARTMENT OR OUTSIDE OF BODY. SAMPLE SIZE WOULD BE GOTT 3 GALLON WATER COOLER.
2.18	(STD.) TAILGATE 6" HIGH, O.E.M. STANDARD, WITH BRACKETS
2.19	SIX-WAY CONNECTOR MOUNTED, DRAW-TITE 18150 OR 18160 OR EQUAL
2.20	TOP-OPENING COMPARTMENT ON BOTH SIDE PAKS (Note: Not available with Option No. 2.15)
2.21	CARGO AREA FLOOR MAT, RUBBER
2.22	HEADACHE RACK SHALL BE PROVIDED TO PROTECT THE REARWINDOW AND SHALL BE CONSTRUCTED OF A MIN. 16 GAUGE STEEL FRAME AND A WINDOW COVERING OF HORIZONTAL LOUVERS, EVENLY SPACED AT APPROXIMATELY 2-INCH INTERVALS, ADEQUATELY BRACED WITH MINIMUM 2" x 5" GUSSETS TO ENSURE STABILITY AND STRENGTH. MOUNTING SHALL BE ACCOMPLISHED BY THE USE OF 3/8INCH BOLTS WITH NUTS AND FLAT WASHER AND SHALL BE MOUNTED IN SUCH A WAY AS TO FACILITATE CLEANING OF THE REAR WINDOW AND SO DESIGNED TO PROVIDE UNOBSTRUCTED VISIBILITY OF THE CENTER-MOUNTED, REAR WINDOW OF CAB-MOUNTED STOPLAMP. RACK SHALL BE TREATED IN A CHEMICAL BATH OR DIP OR SIMILARLY TREATED FOR RUST PREVENTION PRIOR TO THE APPLICATION OF THE FINAL COAT OF PAINT.
2.23	CRANE WITH PLANETARY GEAR WINCH, OSHA & ANSI APPROVED MOMENT RATING OF APPROXIMATELY 10,000 LB/FT. LIFT CAPACITY OF 3200 LBS. AT 3 FT. RADIUS. POWER ROTATION, ELEVATION AND EXTENSION REQUIRED. MINIMUM 3-3/8" I.D. TAPERED ROLLER BEARING WITH A BASE PLATE THAT IS 12” X 12” X 1” THICK MINIMUM. IN ACCORDANCE WITH ASME B30.5, MANUFACTURER SHALL PROVIDE SAE J1063 STRAIN GAUGE CERTIFICATION AND CRANE INSTALLER SHALL PROVIDE SAE J765 STABILITY CERTIFICATION. REFERENCED MANUFACTURERS: LIFTMOORE MODEL 3200 REE15, RKI 3200 ERX15 OR CITY APPROVED EQUAL. CRANE TO INCLUDE THE FOLLOWING 1) OUTRIGGER, MANUAL OUT CRANKDOWN, ASSEMBLY . 2) BOOM REST, LIFTMORE PART NO. 30679, OR CITY APPROVED EQUAL. 3) ANL 150 FUSS LINK BETWEEN 12 VOLT POWER SUPPLY AND CRANE HOT WIRE TO PROTECT TRUCK ELECTRICAL SYSTEM. 4) SUSPENSION LEAF OR LEAVES ADDED TO REAR TRUCK SPRING TO BRING TRUCK BACK TO LEVEL CONDITION (ON CRANE SIDE) TO SUPPORT EXTRA WEIGHT OF CRANE. 5) INTEGRAL LOAD SENSOR. 6) CRANE REINFORCEMENT FOR RIGHT COMPARTMENT.
2.25	THREE DRAWER STORAGE MODULE, RAT PACK OR EQUAL
2.26	(STD.) CLEARANCE LIGHTS, 3-RED LIGHT CLUSTER INSTALLED ON REAR OF SERVICE BODY.
2.27	MUD FLAPS

SPECIFICATIONS FOR STATIONARY PLATFORM/STAKE BODIES

1.0 CONSTRUCTION AND COMPONENT REQUIREMENTS:

1.1 Cross members: cross sill 12” centers

1.2 Longitudinal sills: Two long sills of 5", 6.7 lb/ft structural steel channel

1.3 Rails:

1.3.1 Floor edges shall be enclosed with rails installed on both ends and on both sides as follows: End-rails and side-rails shall be constructed of a minimum 5" structural steel channel.

1.4 Rub-rails:

1.4.1 1/4" X 21/2" steel welded to outside of stake pockets.

1.5 Stake pockets:

1.5.1 Shall be steel, four (4) pockets on rear rail and six (6) pockets on each side rail.
1.5.2 Between each pocket, a 1/4" X 2" steel plate shall be welded to the rub-rail and floor edge rail, top and bottom.

1.6 Cab protector:

1.6.1 The protector shall be designed to prevent shifting of load and penetrating or crushing of the drivers’ compartments.
1.6.2 The cab protector height shall be approximately 34".
1.6.3 The frame shall be constructed with 2" X 3" X 1/8" square tubing, two (2) up-rights of 2" X 3" X 1/8" and 11 gauge steel plate up to the bottom of the window with #9, 3/4 flat expanded metal to the top of the frame.

1.7 Cab protector mounting:

1.7.1 The protector shall be mounted using "knee-brace" style reinforcement welded to the bottom of the outer body rails and long sills.
1.7.2 Top mounted angle gusset type mount IS NOT ACCEPTABLE.

1.8 Flooring:

1.8.1 Wood floor shall be minimum 1-1/2" finished thickness, #1 pine PentaTreated lumber. Only tongue & groove will be ACCEPTABLE.
1.8.2 All wood flooring shall be secured with two (2) recessed screws or bolts at each cross member.

1.9 Mounting strips:

1.9.1 The CHASSIS frame shall be separated from each long sill by 0.75" PentaTreated lumber and shall be required along the entire length of the long sills.

1.10 Anti-slipping Braces:

1.10.1 Two steel angles of 2" X 2" X 0.125" shall be welded to each long sill at a location immediately forward of the first rear spring hanger at approximately 45 degrees from the vertical axis.
1.10.2 The steel angles shall be drilled and bolted to the CHASSIS frame with 0.5" bolts.

2.0 LAMPS, REFLECTORS AND SIDE MARKER LAMPS:

2.1 Lamps, reflectors and side marker lamps shall be furnished as required by Federal standards.
Fully protected metal armored lights and reflectors shall be used.
All wiring shall be run in split flexible conduit.
2” red/silver reflective tape on rub rail sides and back.

3.0 PAINT AND SURFACE PREPARATION:

3.1 All surfaces of the body including all structural members shall be thoroughly prepared and cleaned.
The primer used shall be a rust inhibitive type and compatible with the topcoat that will be painted black.

4.0 MUD FLAPS:

4.1 Mud flaps shall be installed to meet Department of Public Safety requirements and be constructed in such a manner so as to prevent sailing and water splashing.

4.2 Hole on bottom center of each mud flap, to be used in conjunction with hook mounted to mud flap frame to hold mud flap up.

5.0 STATE INSPECTION:

5.1 The body supplier shall install a State Inspection sticker on the vehicle after body installation.

OPTIONAL EQUIPMENT FOR STATIONARY PLATFORM/STAKE BODIES

OPTION NO.	OPTION DESCRIPTION
1	STAKE RACK SECTIONS: Each stake rack section shall have horizontal slats having a maximum 7" gap between them. Each stake rack shall have hardware to lock each section to adjacent sections. The slats shall be constructed of 16 gauge corrugated steel with rounded corners and smooth edges. Each slat shall be secured to two (2) steel stakes. Minimum three (3) slats per section. Two (2) stake rack sections required on both sides and 2 at the rear approximately 34" in height. Each stake section shall have a locking mechanism on the lower slat between the stakes.
2	STEEL FLOORING: IN LIEU OF WOOD FLOORING: Steel flooring shall be 3/16" safety tread plate.
3	RHINO LININGS TUFF-STUFF OR CITY APPROVED EQUAL ANTISKID COATING ON STEEL FLOOR.
4	LIFT GATE: 48" maximum ground-to-bed travel. 34" X 82" Treadplate platform with fixed ramp lifting capacity 1200 lb. electric over hydraulic curbside operation. When lift gate option is used stake rack sections on rear shall not be required. Rhino linings tuff-stuff antiskid coating on platform loading area.
4.1	HYDRAULIC LIFT GATE: 32” minimum, 54” maximum ground-to-bed travel. 89” x 50” aluminum platform with 6” taper, 2000 lbs. lift capacity, electric over hydraulic curbside operation. When lift gate option is ordered, stake rack sections on rear are not required. Rhino linings tuff-stuff antiskid coating on platform loading area. Must be Tommy Gate Railgate Model RF8920AB. No substitutions.
4.2	LIFT GATE, FOLDAWAY: For combination dock and street loading/unloading. Has platform that folds and stows under the body for a dock-ready position. Platform pivots down to a ramp position for loading/unloading at ground level. In the rising operation, the platform pivots to level ride and remains level as it continues to the bed height. Minimum lift capacity of 2500 lbs. All aluminum folding platform, 60” x 80”. Dual platform torsion springs. Weight approximately 1115 lbs. Maxon Lift Corporation, Tuk-a-Series, Model GPT-25 or City-approved equal.
5	BUMPER: ICC BUMPER PER DRAWING “A” ATTACHED 2” ball with 1-3/8 bolt for max load of 5,000 lbs.
6	BUMPER: ICC BUMPER PER DRAWING “A” ATTACHED 25/16” ball with 1-3/8 bolt for max load of 5,000 lbs.
7	BUMPER: ICC BUMPER PER DRAWING “B” ATTACHED Must be Buyers Products No. BH82000 Combination Hitch with PM 87 Hitch Mount and HP6253 WC Hitch Pin. Two Buyers Products B40 Lashing Ring welded on top of bumper No substitutions.
8	Must be BUYERS PRODUCTS: No. RB2516 replacement ball. No substitutions.
9	FOUR-WAY ELECTRICAL ROUND CONNECTOR: Mounted on rear bumper
10	SIX-WAY ELECTRICAL ROUND CONNECTOR: Mounted on rear bumper
11.	SEVEN-WAY ELECTRICAL ROUND CONNECTOR: Mounted on rear bumper
12.	UNDER BED BOXES, RKI OR DUTEC OR APPROVED EQUAL, COLOR BLACK: 12.2 U24- 24” long, 18” depth, 18” height 12.3 U30- 30” long, 18” depth, 18” height 12.4 U36- 36” long, 18” depth, 18” height
13.	ALL UNDER SIDES SHALL BE UNDER COATED.

OPTIONAL EQUIPMENT FOR STATIONARY PLATFORM/STAKE BODIES

OPTION NO.	OPTION DESCRIPTION
14.	RUMBER FLOORING: IN LIEU OF WOOD OR STEEL FLOORING Two" by six" (2" x 6") center match to be installed laid flat with ends butted together and with no spacing between the material and the metal frame. All installation shall be in accordance with the manufacturer's specifications.

SPECIFICATIONS FOR STATIONARY PLATFORM/STAKE BODIES: Continued

BUMPER DRAWINGS A AND B

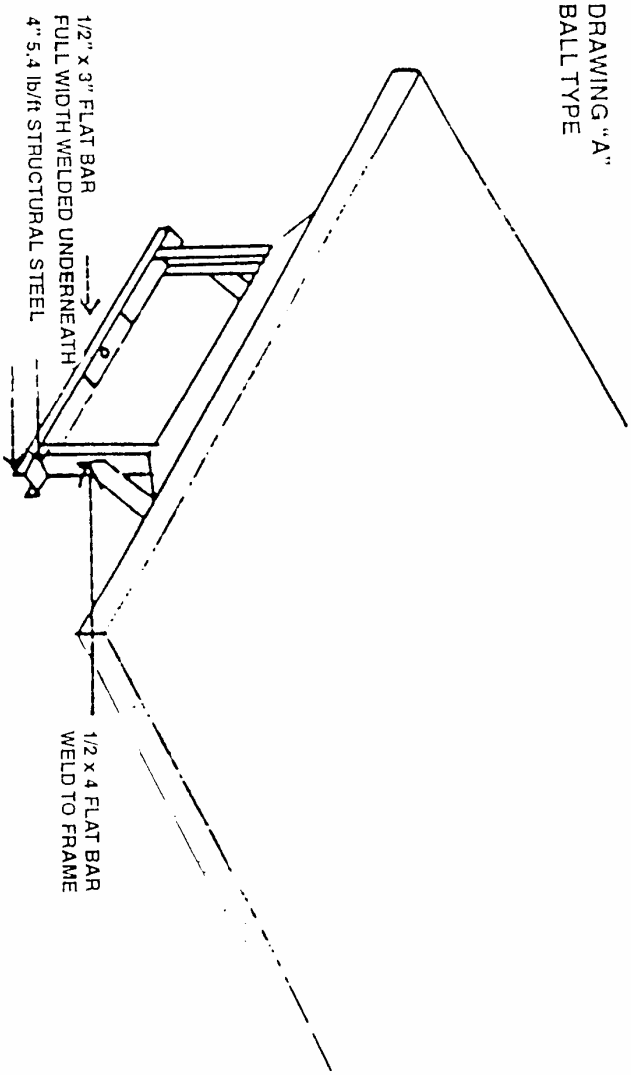

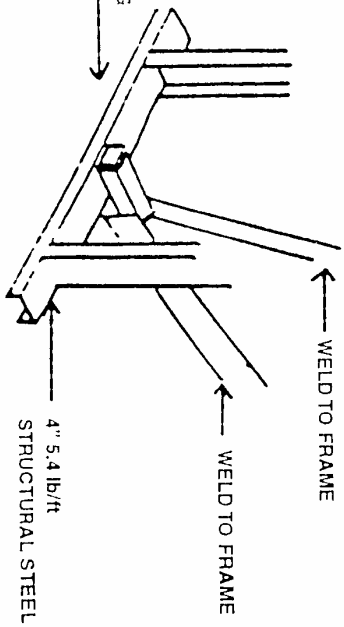

SPECIFICATIONS FOR DUMP TRUCK BODIES

2/3 CUBIC YARDS, 8' OR 9' BED FOR 60" CA, – SERIES NO. 4000:

ALL DUMP BODIES WILL BE MADE WITH ASTM A607 GRADE 45 CLASS2 OR COMMERCIALLY EQUIVALENT STEEL; MINIMUM 45,000 PSI YIELD AND 55,000 PSI TENSILE

APPROVED BRANDS OR CITY APPROVED EQUAL
Heil SL Yard Bird body with 1416FLM hoist or city approved equal
Peabody Galion 100U body with UDE 411DA hoist
Omaha Standard Eagle 2/3 body with DL 424D hoist
Fontaine U250 body with U105519 hoist
Crysteel 2/3 body with RC420 hoist

SPECIFICATIONS:
2 cubic yard water level
3 cubic yard with side boards. Side boards will not be furnished
10 gauge floor
12 gauge sides
12 gauge head
12 gauge tailgate
OEM long members
OEM cross members, with gusset on every other cross member
12 gauge ¼ cab protector 12" minimum
Cab protector shall have a 10" x 24" cut-out for rear viewing
No. 9 raised expanded metal protective covering
Boxed vertical side braces
Boxed top rail
Rear corner post
OEM standard tailgate, double-acting
Tailgate chains and brackets
Upper and lower tailgate hinges, flame-cut steel
Upper and lower tailgate pins
OEM side board pockets
Sloped rub-rails
Sloped tailgate braces
2" radius for floor to sides
Ladder rack, curb side, DRAWING NO.1 (attached)
Shovel rack on right and left sides, made with 2" ID, 3" long pipe for long handled shovels
Pipe to be welded to side of body at an angle so shovel will not fall out
8 foot or 9 foot bed
NETA class 20 hoist, electric/hydraulic
"Bed Up" light and "PTO Engaged" lights mounted on dash visible to driver
Certification of Painting
Paint:
Primer: Sherwin Williams, Gray jet Seal or equal
Undercoat
Base Coat: Color (Acrylic enamel) to match cab
Top Coat: Clear
Backup alarm Ecco #SA901 or Whelen WBUA112 with automatic adjustment for output, from 82 dba to 107 dba
Mud flaps, anti-sail heavy duty fiber, reinforced with metal mounting inserts
State Inspection and Weight Certificate

OPTIONAL EQUIPMENT FOR DUMP BODIES, 2/3 CUBIC YARDS, 8' OR 9' BED FOR 60" CA

OPT. NO.	DESCRIPTION
1	OPT 1 HITCH, Holland Pintle Model PH-T-60-AOL-8 or equivalent reinforced to frame, capable of pulling maximum of 30,000 lbs.
3	OPT 3 "D" RINGS, Buyers Model #848 1" OD Bar Stock 3" x 3"ID oil field type folding mounted on rear bumper
4	OPT 4 CONNECTOR, 4-pole female flap to be mounted on rear bumper and connect to cable
5	OPT 5 CONNECTOR 6-way female flap to be provided and mounted on rear bumper and connect to cable
6	OPT 6 RELOCATION of air and electrical trailer connector to a protected location
7	OPT 7 STROBE LIGHT, Target Tech Model 851, amber, headache rack mounted, switch to be cab-mounted with indicator light
11	OPT 11 TARP, Donovan 5000 SU, HD PVC coated mesh cover, Black Finish, Cab Level Manual Drive.
13	OPT 13 TARP, Donovan 2000 SR with housing and HD PVC coated mesh cover. Supplier shall furnish Side Boards with this option.
14	OPT 14 BEDLINER, Quicksilver Tivar-Uhmw Poly or equal, 1/2" thick polymer material, mounted on bulkhead sidewalls and floor. Sections to be connected with fasteners for lining replacement. Supplier shall provide a minimum 12-month warranty
17	OPT 17 SIGNBOARD, Arrow Wanco Model #25-SAC, vehicle mounted 25 lights, 36" x 72" panel size, with mounted electric actuator lift
18	OPT 18 TRAILER TOWING PACKAGE, seven-way electrical cable
19	OPT 19 SPREADER WITH DOUBLE AUGER, MONROE Model MS964DA or City-approved equal, rear mounted PTO activated tailgate spreader
20	OPT 20 PAINT, base coat shall be IMRON, color to match cab
21	OPT 21 HITCHES, Holland Pintle Model Ph-16-B Combination Pintle Hook and 2" Ball Hitch

SPECIFICATIONS FOR DUMP TRUCK BODIES (CONTINUED):

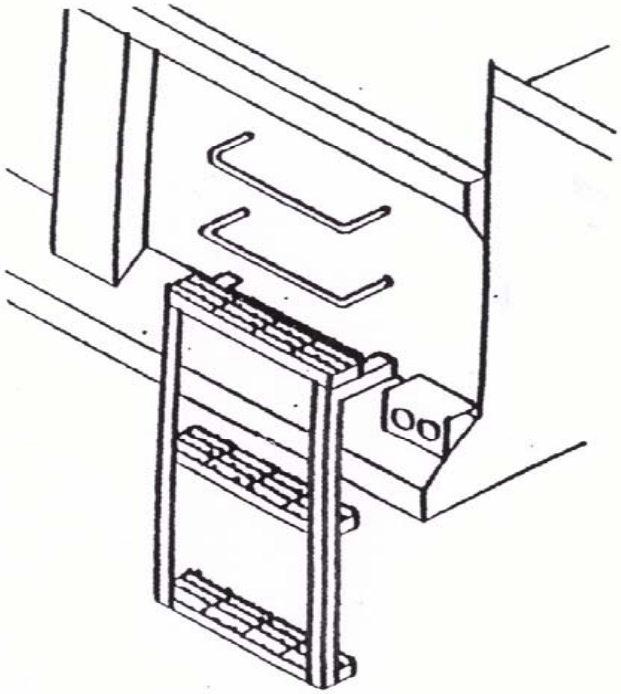

TWO GRAB HANDLES
EACH ¾" RE-BAR
STEPS FABRICATED OF
1-1/2" X 1-1/2" X 1/4"
ANGLE IRON
SERRATED BAR GRATING
WITH EDGES.
STEPS TO BE
APPROXIMATELY 2-1/2"
TO 3-1/2" DEEP

APPROXIMATELY 17" WIDE OD
FIRST STEP APPROXIMATELY
24" FROM GROUND

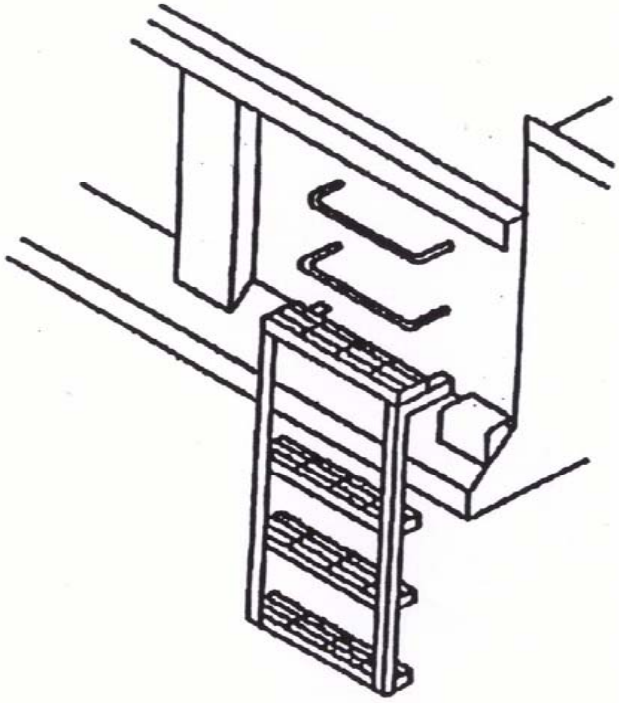

DRAWING #1
THREE STEP
FOR 2 TO 3 YD AND 5 TO 6 YD
CURBSIDE

DRAWING #2
FOUR STEP
FOR 10 TO 12 YD
CURBSIDE

SECTION C

GENERAL TERMS AND CONDITIONS

1.0 COMPETITIVE BIDDING:

It is the intent of the City of Houston to solicit the lowest and best responsible bid or price under competitive conditions. All materials and/or equipment shall be new unless stated otherwise. Prospective bidders are advised that the specifications within this bid invitation are not to be considered restricted to any referenced manufacturer.

2.0 AWARD:

2.1 The City reserves the right to consider and make awards of bids on articles of similar nature that will in all respects serve the purpose for which the purchase is being made. The City reserves the right to be the sole judge as to whether such articles will serve the purpose.

2.2 Unless otherwise specified, the City reserves the right to accept or reject in whole or in part any bid submitted or to waive any informalities that are in the best interests of the City.

3.0 CONDITIONS PART OF BID:

3.1 In the event of any conflict, the terms and provisions incorporated in the bid specifications shall control over the terms and provisions of the General Terms & Conditions for any or all purposes. Otherwise, all the terms and provisions appearing within the General Terms & Conditions shall be given full effect and shall be construed in harmony to the maximum extent by the parties hereto.

3.2 The failure of the City to insist, in any one or more instances, upon performance of any of the terms, covenants or conditions of this Contract (Purchase Order), General Terms & Conditions or Specifications shall not be construed as a waiver or relinquishment of the future performance of such term, covenant or condition by the City, but the obligation of the Prime Contractor/Supplier with respect to such future performance shall continue in full force and effect.

4.0 SHIPPING TERMS:

Prices shall be prepaid F.O.B. destination to the delivery locations, Houston, TX, as indicated on individual City of Houston purchase orders. Prime Contractor/Supplier shall retain title and control of all goods until they are delivered and the contract of coverage (Purchase Order) has been completed. All risk of transportation and all related charges shall be the responsibility of the Prime Contractor/Supplier. All claims for visible or concealed damage shall be filed by the Prime Contractor/Supplier. The City will notify the Prime Contractor/Supplier promptly of any damaged goods and shall assist the Prime Contractor/Supplier in arranging for inspection.

5.0 SILENCE OF SPECIFICATIONS:

The apparent silence of these specifications as to any detail or the apparent omission from them of a detailed description concerning any point shall be regarded as meaning that only the best commercial practice shall prevail and only materials and workmanship of first quality are acceptable. All interpretations of these specifications shall be made upon the basis of this statement.

6.0 SPECIFIED EQUIPMENT, OR EQUIVALENT:

6.1 Wherever in the specifications any materials or processes are indicated or specified by patent of proprietary name and/or by name of manufacturer, such specifications shall be deemed to be used for the purpose of facilitating descriptions of the performance, materials and/or processes desired and shall be deemed to be followed by the words, "or equivalent", if not so stated in the specifications herein.

6.2 The burden of proof shall rest with the bidder, in the course of a technical evaluation, to prove that the **DETERMINATION AS TO WHETHER THE ITEM(S) BID IS(ARE) EQUIVALENT TO THOSE SPECIFIED SHALL REST SOLELY WITH THE CITY PURCHASING AGENT AND THE RECEIVING DEPARTMENT.**

7.0 BRAND NAMES:

Any manufacturer's names, trade names, brand names, or catalog numbers used in the specifications are for the purpose of describing and establishing the general quality level, design and performance desired. Such references are not intended to limit or restrict bidding by other Prime Contractor/Suppliers, but are intended to approximate the quality design or performance that is desired. Any bid that proposes like quality, design or performance, will be considered. Equivalent products will be considered, provided a complete description and product literature is provided. Unless a specific substitution is made, the assumption will be that the item bid is exactly as specified on the Invitation to Bid.

8.0 PATENTS:

THE PRIME CONTRACTOR/SUPPLIER AGREES TO INDEMNIFY AND SAVE HARMLESS THE CITY, ITS AGENTS EMPLOYEES, OFFICERS, AND LEGAL REPRESENTATIVES (COLLECTIVELY THE "CITY") FROM ALL SUITS AND ACTIONS OF EVERY NATURE AND DESCRIPTION BROUGHT AGAINST THEM OR ANY OF THEM, FOR OR ON ACCOUNT OF THE USE OF PATENTED APPLIANCES, PRODUCTS OR PROCESSES, AND IT SHALL PAY ALL ROYALTIES AND CHARGES WHICH ARE LEGAL AND EQUITABLE. EVIDENCE OF SUCH PAYMENT OR SATISFACTION SHALL BE SUBMITTED, UPON REQUEST OF THE CITY PURCHASING AGENT, AS A NECESSARY REQUIREMENT IN CONNECTION WITH THE FINAL ESTIMATE FOR PAYMENT IN WHICH SUCH PATENTED APPLIANCE, PRODUCTS OR PROCESSES ARE USED.

9.0 RELEASE:

PRIME CONTRACTOR/SUPPLIER AGREES TO AND SHALL RELEASE THE CITY, ITS AGENTS, EMPLOYEES, OFFICERS, AND LEGAL REPRESENTATIVES (COLLECTIVELY THE "CITY") FROM ALL LIABILITY FOR INJURY, DEATH, DAMAGE, OR LOSS TO PERSONS OR PROPERTY SUSTAINED IN CONNECTION WITH OR INCIDENTAL TO PERFORMANCE UNDER THIS AGREEMENT, EVEN IF THE INJURY, DEATH, DAMAGE, OR LOSS IS CAUSED BY THE CITY'S SOLE OR CONCURRENT NEGLIGENCE AND/OR THE CITY'S STRICT PRODUCTS LIABILITY OR STRICT STATUTORY LIABILITY.

10.0 INDEMNIFICATION:

10.1 PRIME CONTRACTOR/SUPPLIER AGREES TO AND SHALL DEFEND, INDEMNIFY, AND HOLD THE CITY, ITS AGENTS, EMPLOYEES, OFFICERS, AND LEGAL REPRESENTATIVES (COLLECTIVELY THE "CITY") HARMLESS FOR ALL CLAIMS, CAUSES OF ACTION, LIABILITIES, FINES, AND EXPENSES (INCLUDING, WITHOUT LIMITATION, ATTORNEYS' FEES, COURT COSTS, AND ALL OTHER DEFENSE COSTS AND INTEREST) FOR INJURY, DEATH, DAMAGE, OR LOSS TO PERSONS OR PROPERTY SUSTAINED IN CONNECTION WITH OR INCIDENTAL TO PERFORMANCE UNDER THIS AGREEMENT INCLUDING, WITHOUT LIMITATION, THOSE CAUSED BY:

(1) PRIME CONTRACTOR/SUPPLIER'S AND/OR ITS AGENTS', EMPLOYEES', OFFICERS', DIRECTORS', CONTRACTORS', OR SUBCONTRACTORS' (COLLECTIVELY IN NUMBERED PARAGRAPHS 1-3, "PRIME CONTRACTOR/SUPPLIER") ACTUAL OR ALLEGED NEGLIGENCE OR INTENTIONAL ACTS OR OMISSIONS;

(2) THE CITY'S AND PRIME CONTRACTOR/SUPPLIER'S ACTUAL OR ALLEGED CONCURRENT NEGLIGENCE, WHETHER PRIME CONTRACTOR/SUPPLIER IS IMMUNE FROM LIABILITY OR NOT; AND

(3) THE CITY'S AND PRIME CONTRACTOR/SUPPLIER'S ACTUAL OR ALLEGED STRICT PRODUCTS LIABILITY OR STRICT STATUTORY LIABILITY, WHETHER PRIME CONTRACTOR/SUPPLIER IS IMMUNE FROM LIABILITY OR NOT.

10.2 PRIME CONTRACTOR/SUPPLIER SHALL DEFEND, INDEMNIFY, AND HOLD THE CITY HARMLESS DURING THE TERM OF THIS AGREEMENT AND FOR FOUR YEARS AFTER THE AGREEMENT TERMINATES. PRIME CONTRACTOR/SUPPLIER'S INDEMNIFICATION IS LIMITED TO $500,000 PER OCCURRENCE. PRIME CONTRACTOR/SUPPLIER SHALL NOT INDEMNIFY THE CITY FOR THE CITY'S SOLE NEGLIGENCE.

10.0 INDEMNIFICATION: (Continued)

10.3 INDEMNIFICATION PROCEDURES:

(1) Notice of Claims If the City or Prime Contractor/Supplier receives notice of any claim or circumstances which could give rise to an indemnified loss, the receiving party shall give written notice to the other party within 10 days. The notice must include the following:

(a) a description of the indemnification event in reasonable detail,
(b) the basis on which indemnification may be due, and
(c) the anticipated amount of the indemnified loss.

This notice does not stop or prevent the City from later asserting a different basis for indemnification or a different amount of indemnified loss than that indicated in the initial notice. If the City does not provide this notice within the 10 day period, it does not waive any right to indemnification except to the extent that Prime Contractor/Supplier is prejudiced, suffers loss, or incurs expense because of the delay.

(2)Defense of Claims

(a) Assumption of Defense. Prime Contractor/Supplier may assume the defense of the claim at its own expense with counsel chosen by it that is reasonably satisfactory to the City. Prime Contractor/Supplier shall then control the defense and any negotiations to settle the claim. Within 10 days after receiving written notice of the indemnification request, Prime Contractor/Supplier must advise the City as to whether or not it will defend the claim. If Prime Contractor/Supplier does not assume the defense, the City shall assume and control the defense, and all defense expenses constitute an indemnification loss.

(b) Continued Participation. If Prime Contractor/Supplier elects to defend the claim, the City may retain separate counsel to participate in (but not control) the defense and to participate in (but not control) any settlement negotiations. Prime Contractor/Supplier may settle the claim without the consent or agreement of the City, unless it (i) would result in injunctive relief or other equitable remedies or otherwise require the City to comply with restrictions or limitations that adversely affect the City, (ii) would require the City to pay amounts that Contractor does not fund in full, (iii) would not result in the City's full and complete release from all liability to the plaintiffs or claimants who are parties to or otherwise bound by the settlement.

11.0 INSURANCE: (See Exhibit No. 2, Sample of Certificate of Insurance)

11.1 Prior to award and/or starting work, Prime Contractor/Supplier must present a Certificate of Insurance evidencing the insurance coverage specified herein. This is a mandatory requirement. Only unaltered, original insurance certificates are acceptable. Photocopies are unacceptable.

***Exception: Proof of insurance coverage is not required by Prime Contractor/Supplier if the specified equipment will be dropped-shipped by manufacturer, or delivered by a common carrier, and this contract agreement (Purchase Order) does not require Prime Contractor/Supplier to perform a labor or service component at a City facility. Prior to award, Prime Contractor/Supplier must present a written statement attesting to this exception.**

11.2 The Prime Contractor/Supplier shall have insurance coverage as follows:

Commercial General Liability shall be $500,000 per occurrence; $1,000,000 aggregate, per 12-month policy period.

11.0 INSURANCE: (Continued)

- **Automobile Liability Insurance for autos furnished or used in the course of performance of this Contract (Purchase Order), including Owned, Non-Owned, and Hired auto coverage.** (Any Auto coverage may be substituted for Owned, Non-Owned and Hired Auto coverage.) If no autos are owned by Prime Contractor/Supplier, coverage may be limited to Non-Owned and Hired Autos. If Owned Auto coverage cannot be purchased by Prime Contractor/Supplier, Scheduled Auto coverage may be substituted for Owned Auto coverage. EACH AUTO USED IN PERFORMANCE OF THIS CONTRACT (PURCHASE ORDER) MUST BE COVERED IN THE LIMITS SPECIFIED: $1,000,000 - Combined Single Limit per occurrence; $1,000,000 aggregate, per 12-month policy period.

- **Worker's Compensation including Broad Form All States endorsement shall be in statutory amount and**

- **Employer's Liability:** Bodily Injury/Accident $100,000; Bodily Injury / Disease $100,000 (per employee); Bodily Injury / Disease $100,000 (policy limit).

11.3 The issuer of any policy (1) shall have a Certificate of Authority to transact insurance business in the State of Texas, or (2) shall be an eligible non-admitted insurer in the State of Texas, and shall have a Best's rating of B+ or better and a Best's Financial Size Category of Class VI or better, according to the most current edition of Best's Key Rating Guide.

11.4 All insurance policies required by this Contract (Purchase Order) shall require that 1) the City of Houston is named as an additional insured on the General Liability, Auto Liability and any Umbrella policies; 2) waiver of subrogation is provided for the City of Houston on General Liability, Auto Liability, any Umbrella polices, and Worker's Compensation; and 3) thirty (30) days advance written notice shall be provided to the City before the any policy required by this Contract (Purchase Order) is cancelled or non-renewed. Within such thirty (30) day period, Prime Contractor/Supplier covenants that it will provide other suitable policies in lieu of those about to be cancelled or non-renewed to maintain in effect the coverage required under the provisions hereof. Failure or refusal of the Prime Contractor/Supplier to obtain and keep in force the above-required insurance coverage shall authorize the City, at its option, to terminate this Contract (Purchase Order) at once.

11.5 REQUIREMENTS FOR CERTIFICATE OF INSURANCE:

11.5.1 Name and Address of Producer writing coverage.

11.5.2 Name of each insurance company providing coverage (as listed or on company's Certificate of Authority on file with the Texas Department of Insurance, or in Best's Key Rating Guide).

11.5.3 Name and address of Insured (as shown on policy).

11.5.4 Letter in the column must reference the insurer of the policy being described.

11.5.5 Must be a policy number; no binders will be accepted.

11.5.6 Date policy became effective.

11.5.7 Expiration date of policy must be at least 30 days from date of delivery of certificate.

11.5.8 Name and file number of project (Bid Name and Bid Number).

11.5.9 Name of project manager (Buyer).

11.5.10 Signature or facsimile signature of authorized representative of Producer (blue ink preferred).

FORWARD CERTIFICATE TO BUYER AT: **City of Houston/Administration & Regulatory Affairs Department**
Strategic Purchasing Division
P.O. Box 1562
Houston, Texas 77251-1562

12.0 DRUG DETECTION AND DETERRENCE PROCEDURE: (See Online Forms)

12.1 It is the policy of the City to achieve a drug-free workforce and to provide a workplace that is free from the use of illegal drugs and alcohol. It is also the policy of the City that the manufacture, distribution, dispensation, possession, sale or use of illegal drugs or alcohol by Prime Contractor/Suppliers while on City premises is prohibited. By executing this Contract (Purchase Order), Prime Contractor/Supplier represents and certifies that it meets and shall comply with all the requirements and procedures set forth in the Mayor's Policy on Drug Detection and Deterrence, City Council Motion No. 92-1971 ("Mayor's Policy") and the Mayor's Drug Detection and Deterrence Procedures for Contractors, Executive Order No. 1-31 ("Executive Order"), both of which are on file in the Office of the City Secretary.

12.2 Prime Contractor/Supplier shall provide, prior to execution of this Contract (Purchase Order) by the City, 1) a copy of its drug-free workplace policy, 2) the Drug Policy Compliance Agreement substantially in the format set forth in Attachment "A", 3) a written designation of all safety impact positions, or if applicable, Certification of No Safety Impact Positions substantially in the format set forth in Attachment "C", and 4) if a written designation of safety impact positions is filed, a declaration substantially in the format set forth in Attachment “B” shall be filed.

12.3 SAFETY IMPACT POSITION means a Prime Contractor/Supplier’s employment position involving job duties that if performed with inattentiveness, errors in judgment, or diminished coordination, dexterity, or composure may result in mistakes that could present a real and/or imminent threat to the personal health or safety of the employee, co-workers, and/or the public.

13.0 MINORITY AND WOMEN BUSINESS ENTERPRISES: (See Online Form)

These provisions apply to goal oriented Contracts (Purchase Orders). A goal oriented Contract (Purchase Order) means any Contract (Purchase Order) awarded for the supply of goods or non-professional services of approximately $100,000.00 for which competitive bids are required by law and which the City Purchasing Agent has determined to have City of Houston Certified MWBE subcontracting potential.

Prime Contractor/Supplier agrees to comply with the City's Minority and Women Business Enterprise programs as set out in Chapter 15, Article V of the City of Houston Code of Ordinances insofar as such programs apply to this Contract (Purchase Order). Prime Contractor/Supplier further agrees that it will make good faith efforts to award subcontracts or supply agreements in at least **4%** of the value of this Contract (Purchase Order) to Minority and Women-owned Business Enterprises certified by the City's Affirmative Action Division. **Due to the nature of the equipment that is available for M/WBE participation, the 4% goal will not apply to Bid Items 1, 4, 5, and 8.** In addition, Prime Contractor/Supplier acknowledges that it has reviewed the requirements for good faith efforts that are on file with the City's Affirmative Action Division, is familiar with such requirements, and will comply with them.

Prime Contractor/Supplier shall require written subcontracts with all MWBE subcontractors and suppliers, which must contain the terms set out in the documents attached herein. If Prime Contractor/Supplier is an individual person (as distinguished from a corporation, partnership, or other legal entity), and the amount of the subcontract is $50,000 or less, then the subcontract must also be signed by the attorneys of the respective parties.

Refer to the "City of Houston Goal-Oriented Minority and Women Business Enterprises Contract Provisions" attachment, which is incorporated in the specifications herein by this reference for all purposes, for more detailed information on this requirement.

14.0 REJECTIONS:

14.1 Articles not in accordance with samples and specifications must be removed by the Prime Contractor/Supplier and at his expense. All disputes concerning quality of supplies delivered under this offer will be determined by the City Purchasing Agent or designated representative.

14.2 All articles enumerated in the offer shall be subject to inspection on delivery by an officer designated for the purpose and if found inferior to the quality called for, or not equal in value to the Department's samples, or deficient in weight, measurements, workmanship or otherwise, this fact shall be certified to the City Purchasing Agent who shall have the right to reject the whole or any part of the same.

15.0 TAXES:

The City is exempt from the Federal Excise and Transportation Tax, and the limited Sales and Use Tax. Unless the Bid Form or Specifications specifically indicate otherwise, the bid price must be net exclusive of above-mentioned taxes. A Prime Contractor/Supplier desiring refunds of, or exemptions from, taxes paid on merchandise accepted by the City, must submit the proper forms, and the City Purchasing Agent, if satisfied as to the facts, may approve or issue the necessary certificates.

16.0 INVOICING:

16.1 In order to expedite payments all invoices must be submitted in triplicate, itemized as to quantity, part and/or model number, description in the same order and form as in the City of Houston Purchase Order. Variations will only delay payment. In addition, invoices must show the name of the Department, Division or Section to which the merchandise was delivered, and the City of Houston Purchase Order Number.

16.2 All delivery tickets must have a description of the item delivered.

16.3 Mail invoices and a copy of the signed City of Houston Equipment/Receiver Report to the Accounts Payable Section of the Department and to the address, as noted on individual purchase orders.

16.4 Delivery tickets and packing slips will contain the same information as the invoice.

16.5 The City of Houston Equipment/Receiver Report must be signed by the receiving employee with their City Employee Number and must be signed by Prime Contractor/Supplier Representative.

17.0 PAYMENT:

Payment is due thirty (30) days after the City has approved the invoice or after the City has accepted the equipment and all required documents, whichever occurs later. Invoices received that do not agree with the provisions set forth herein shall be returned for correction and will result in payment being delayed.

18.0 PAYMENT OF SUBCONTRACTORS:

Prime Contractor/Supplier shall make timely payments to all persons and entities supplying labor, materials or equipment for the performance of this Contract (Purchase Order). Prime Contractor/Supplier agrees to protect, defend, and indemnify the City from any claims or liability arising out of Contractor's/Supplier's failure to make such payments. (Disputes relating to payment of M/WBE subcontractors shall be submitted to arbitration in the same manner as any other disputes under the M/WBE subcontract. Failure of the Prime Contractor/Supplier to comply with the decisions of the arbitrator may be deemed, at the sole discretion of the City, a material breach leading to termination of this Contract (Purchase Order)).

19.0 INSPECTIONS AND AUDITS:

19.1 The City reserves all rights to review all payments made to Suppliers by auditing at a later date. Subject to such audit, any overpayments may be recovered from the Supplier.

19.2 City representatives may have the right to perform, or have performed, (1) audits of Supplier's books and records, and (2) inspections of all places where work is undertaken in connection with this Agreement. Supplier shall keep its books and records available for this purpose for at least three years after this Agreement terminates. This provision does not affect the applicable statute of limitations.

19.3 City representatives have the right to examine the books of all subcontractors and/or suppliers supplying goods and/or services under the prime (Purchase Order) insofar as those books and records relate to performance under the prime contract (Purchase Order).

20.0 CONTRACTOR DEBT:

If Prime Contractor/Supplier, at any time during the term of this agreement, incurs a debt, as the word is defined in Section 15-122 of the Houston City Code of Ordinances, it shall immediately notify the City Controller in writing. If the City Controller becomes aware that Prime Contractor/Supplier has incurred a debt, the City Controller shall immediately notify Prime Contractor/Supplier in writing. If Prime Contractor/Supplier does not pay the debt within 30 days of either such notification, the City Controller may deduct funds in an amount equal to the debt from any payments owed to Prime Contractor/Supplier under this agreement, and Prime Contractor/Supplier waives any recourse therefore.

21.0 SUCCESSORS & ASSIGNS:

Prime Contractor/Supplier may not assign this (Purchase Order) or dispose of substantially all of its assets without the written consent of the City Purchasing Agent. Prime Contractor/Suppliers failure to obtain such consent shall be an event of default, authorizing the Purchasing Agent to terminate this contract (Purchase Order) according to its terms.

22.0 CHANGE ORDERS:

22.1 At any time during the Agreement Term, the City Purchasing Agent, or designated representative, may issue a change order to increase or decrease the scope of services, or change plans and specifications, as may be necessary to accomplish the general purposes of this Agreement. Prime Contractor/Supplier shall furnish the services or deliverables in the change order in accordance with the requirements of this Agreement plus any special provisions, specifications, or special instructions issued to execute the additional work.

22.2 Prime Contractor/Supplier shall not make any changes to the specifications contained herein without written authorization from the City Purchasing Agent or designated representative.

22.2.1 The City may refuse to accept all or part of the work performed or equipment/supplies delivered if changes are made to the specifications without the written authorization of the City Purchasing Agent or designated representative. The City shall not be responsible for costs incurred by the Prime Contractor/Supplier on unauthorized change orders.

22.2.2 A letter with supporting documentation of the requested change(s) shall be submitted to the City Purchasing Agent, and the City Purchasing Agent must approve any requested changes by written authorization PRIOR TO ANY CHANGES BEING PERFORMED. Documentation acceptable to the City Purchasing Agent as evidence of Prime Contractor/Supplier's change(s) shall reference the City's bid specification by section(s) and page number(s). The face of the envelope containing this letter shall clearly state "CHANGE ORDER REQUEST". The letter shall reference the CITY BID INVITATION NUMBER, EQUIPMENT DESCRIPTION and CITY PURCHASE ORDER NUMBER(S). Failure to provide clear and concise evidence as stated above and in the format requested will result in denial until Prime Contractor/Supplier complies with these provisions. Documentation shall be mailed to:

City Purchasing Agent
City of Houston, Administration & Regulatory Affairs Department
Strategic Purchasing Division
P. O. Box 1562
Houston, TX 77251-1562

22.3 The City Purchasing Agent, or designated representative, may issue change orders, subject to the following limitations:

22.3.1 City Council expressly authorizes the City Purchasing Agent to approve change orders of $50,000 or less. A change order of more than $50,000 over the approved contract (Purchase Order) amount must be approved by City Council.

22.3.2 The total of all change orders issued under this section may not increase the Original Agreement amount by more than 25%.

22.3.3 For any items described in a change order that the Prime Contractor/Supplier is otherwise required to provide under the Original Agreement, the City shall not pay additional money to Prime Contractor/Supplier.

23.0 TERMINATION OF AGREEMENT:

23.1 By the City for Convenience:

23.1.1 The City Purchasing Agent may terminate this Contract (Purchase Order) at any time upon 30 calendar days notice in writing to the Prime Contractor/Supplier. Upon receipt of such notice, Prime Contractor/Supplier shall, unless the notice directs otherwise, discontinue all services in connection with the performance of the Contract (Purchase Order) and shall proceed to cancel promptly all existing orders and contracts insofar as such orders and contracts are chargeable to this Contract (Purchase Order). As soon as practicable after the receipt of notice of termination, the Prime Contractor/Supplier shall submit a statement to the appropriate department(s) showing in detail the services performed or items delivered under this Contract (Purchase Order) to date of termination. The City agrees to compensate the Prime Contractor/Supplier for that portion of the prescribed charges for which the services were actually performed or items delivered under this Contract (Purchase Order) and not previously paid.

23.2 By the City for Default by Prime Contractor/Supplier:

23.2.1 In the event that the materials and/or services furnished by the Prime Contractor/Supplier do not conform to the standard set forth herein, or if the deliveries and servicing of this Contract (Purchase Order) do not conform to the requirements detailed herein, the City through a written notice from the Purchasing Agent to the Prime Contractor/Supplier describing such default may as its options:

(1) Terminate the Contract (Purchase Order) for default and the City shall have no further obligation under the Contract (Purchase Order).

(2) Allow the Prime Contractor/Supplier to cure default within 30 calendar days from receipt of notice unless the City Purchasing Agent specifies a longer period of time in the notice. The City, at its sole option, may extend the proposed date of termination to a later date. If prior to the proposed date of termination, Prime Contractor/Supplier cures such default to the City's satisfaction, then the proposed termination shall be ineffective. If Prime Contractor/Supplier fails to cure such default prior to the proposed date of termination, then the City may terminate its performance under this Contract (Purchase Order) as of such date and have no further obligation under the Contract (Purchase Order).

23.2.2 In the event of failure to deliver any or all of the items or to perform required services, the City may cover its loss by reasonably procuring from another source the items not delivered or the services not performed. Prime Contractor/Supplier shall be responsible for, and shall pay to the City immediately upon demand, the difference in price between that offered by the Prime Contractor/Supplier and that which the City was forced to pay for covering Prime Contractor/Supplier's failure to deliver or perform services.

23.3 By the Prime Contractor/Supplier for Default by City:

23.3.1 Default by the City shall occur if the City fails to perform or observe the terms and conditions of this Contract (Purchase Order) required to be performed or observed by the City, and the Prime Contractor/Supplier gives notice in writing to the City of the act or omission claimed by the Prime Contractor/Supplier to constitute default on the part of the City.

23.3.2 Upon receipt of such notice in writing from the Prime Contractor/Supplier; however, the City shall have 30 calendar days to cure such default. The Prime Contractor/Supplier, at its sole option, may extend the proposed date of termination to a later date.

23.3.3 If City cures such default prior to the proposed date of termination, the proposed termination shall be ineffective. If the City fails to cure such default prior to the proposed date of termination, then the Prime Contractor/Supplier may terminate its performance under this Contract (Purchase Order) as of such date.

EXHIBIT NO. 2

SAMPLE ACCORD CERTIFICATE OF INSURANCE

Issue Date (MM/DD/YY)

PRODUCER:
ISSUERS OF POLICIES. THE ISSUER MUST HAVE A RATING OF B+ OR BETTER AND FINANCIAL SIZE OF CLASS VI OR BETTER ACCORDING TO THE CURRENT YEAR'S BEST RATING, OR HAVE A CERTIFICATE OF AUTHORITY TO CONDUCT INSURANCE BUSINESS IN THE STATE OF TEXAS

THIS CERTIFICATE IS ISSUED AS A MATTER OF INFORMATION ONLY AND CONFERS NO RIGHTS UPON THE CERTIFICATE HOLDER. THIS CERTIFICATE DOES NOT AMEND, EXTEND OR ALTER THE COVERAGE AFFORDED BY THE POLICIES BELOW.

COMPANIES AFFORDING COVERAGE

COMPANY A

COMPANY B

COMPANY C

COMPANY D

COMPANY E

INSURED:

S A M P L E F O R M

COVERAGES:
THIS IS TO CERTIFY THAT THE POLICIES OF INSURANCE LISTED BELOW HAVE BEEN ISSUED TO THE INSURED NAMED ABOVE FOR THE POLICY PERIOD INDICATED, NOTWITHSTANDING ANY REQUIREMENT, TERM OR CONDITION OF ANY CONTRACT OR OTHER DOCUMENT WITH RESPECT TO WHICH THIS CERTIFICATE MAY BE ISSUED OR MAY PERTAIN. THE INSURANCE AFFORDED BY THE POLICIES DESCRIBED HEREIN IS SUBJECT TO ALL THE TERMS, EXCLUSIONS AND CONDITIONS OF SUCH POLICIES. LIMITS SHOWN MAY HAVE BEEN REDUCED BY PAID CLAIMS.

CO LTR.	TYPE OF INSURANCE	POLICY NUMBER	POLICY EFFECTIVE DATE (MM/DD/YY)	POLICY EXPIRATION DATE (MM/DD/YY)		LIMITS
	General Liability				General Aggregate	$1,000,000
A.	(X) Commercial General Liability				Products-Comp/Op Agg.	$1,000,000
	Claims Made (X) Occur.				Personal & Adv. Injury	$1,000,000
	Owners & Contractors Prot.				Each Occurrence	$ 500,000
					Fire Damage (Any one fire)	$ 50,000
					Med. Expense (Any one person)	$ 5,000
	Automobile Liability	Auto Liability Insurance for autos furnished or used in the course of performance of this Contract. Including Owned, Non-owned, and Hired Auto coverage. (Any Auto coverage may be substituted for Owned, Non-owned and Hired Auto coverage.) If no autos are owned by Contractor, coverage may be limited to Non-owned and Hired Autos. If Owned Auto coverage cannot be purchased by Contractor, Scheduled Auto coverage may be substituted for Owned Auto coverage. EACH AUTO USED IN PERFORMANCE OF THIS CONTRACT MUST BE COVERED IN THE LIMITS SPECIFIED.				Combined Single Limit	$1,000,000
A.	(X) Any Auto					
	All Owned Autos				Bodily Injury (Per person)	$
	Scheduled Autos					
	(X) Hired Autos				Bodily Injury (Per Accident)	$
	(X) Non-Owned Autos					
	Garage Liability				Property Damage	$
	Excess Liability				Each Occurrence	$
	Umbrella Form				Aggregate	$
	Other than Umbrella Form					
	Worker's Compensation And Employee Liability		Statutory Limits	(X)	**Statutory Limits**	
					Each Accident	$ 100,000
					Disease - Policy Limit	$ 100,000
					Disease - Each Employee	$ 100,000
	Other					

DESCRIPTION OF OPERATION/LOCATIONS/VEHICLES/SPECIAL ITEMS
City of Houston is named as additional insured on Auto, General Liability and Umbrella policies. Waiver of Subrogation is provided on Auto, General Liability, Worker's Compensation and Umbrella policies. The terms of the policies described by this certificate as to advance notification of cancellation and non-renewal are in compliance with the Contract terms between the City and the Insured for the project/service covered by this certificate and such advance notification will be provided.

CERTIFICATE HOLDER:
CITY OF HOUSTON/ADMIN. & REGULATORY AFFAIRS DEPT.
STRATEGIC PURCHASING DIVISION
P.O. BOX 1562
HOUSTON, TX 77251

CANCELLATION: (MODIFIED AS INDICATED ABOVE)
~~SHOULD ANY OF THE ABOVE DESCRIBED POLICIES BE CANCELLED, BEFORE THE EXPIRATION DATE THEREOF, THE ISSUING INSURER WILL ENDEAVOR TO MAIL 30 DAYS WRITTEN NOTICE TO THE CERTIFICATE-HOLDER NAMED TO THE LEFT, BUY FAILURE TO DO SO SHALL IMPOSE NO OBLIGATION OR LIABILITY OF ANY KIND UPON THE INSURER, IT'S AGENTS OR REPRESENTATIVES.~~

AUTHORIZED REPRESENTATIVE: