Construction Details

Type MN

COUNTER CLOCKWISE ROTATION - VIEWED FROM SUCTION END
(ALSO AVAILABLE IN CLOCKWISE ROTATION)

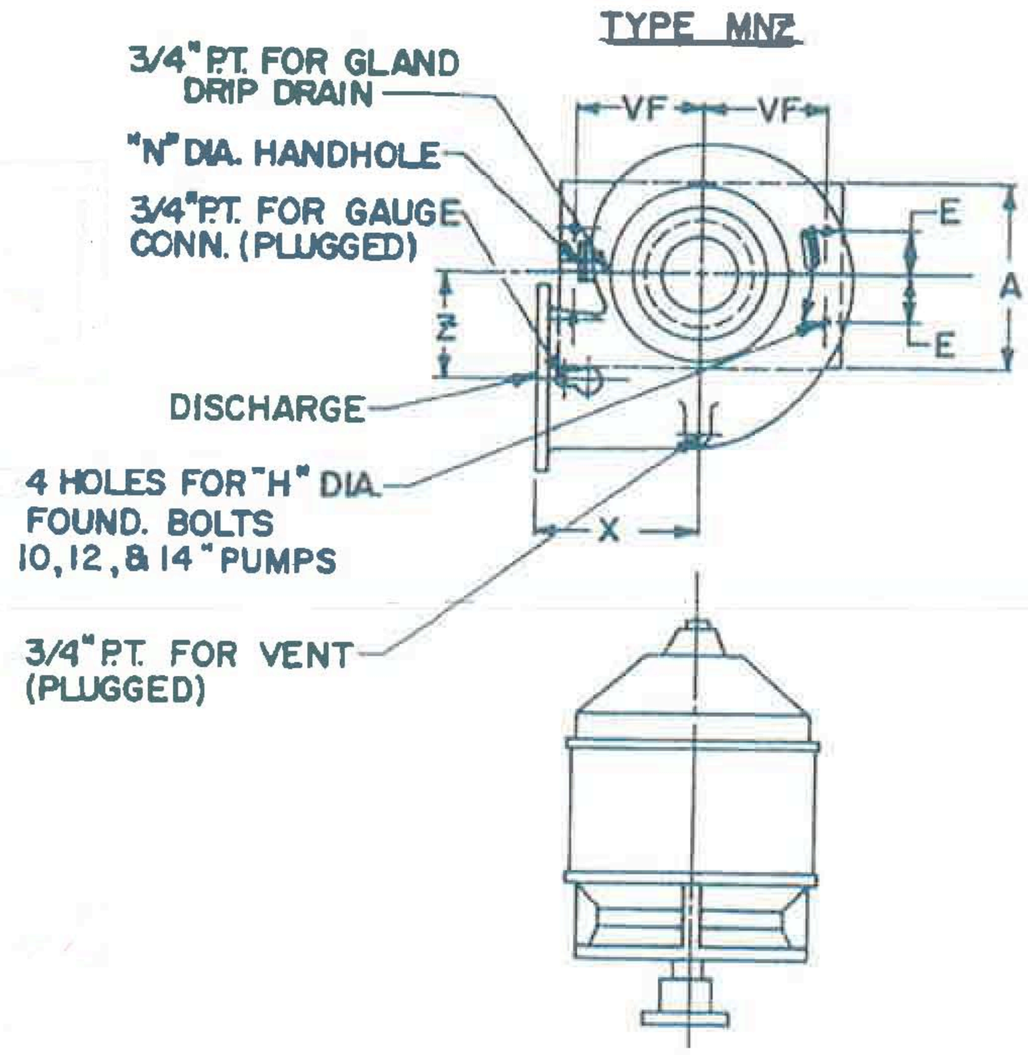

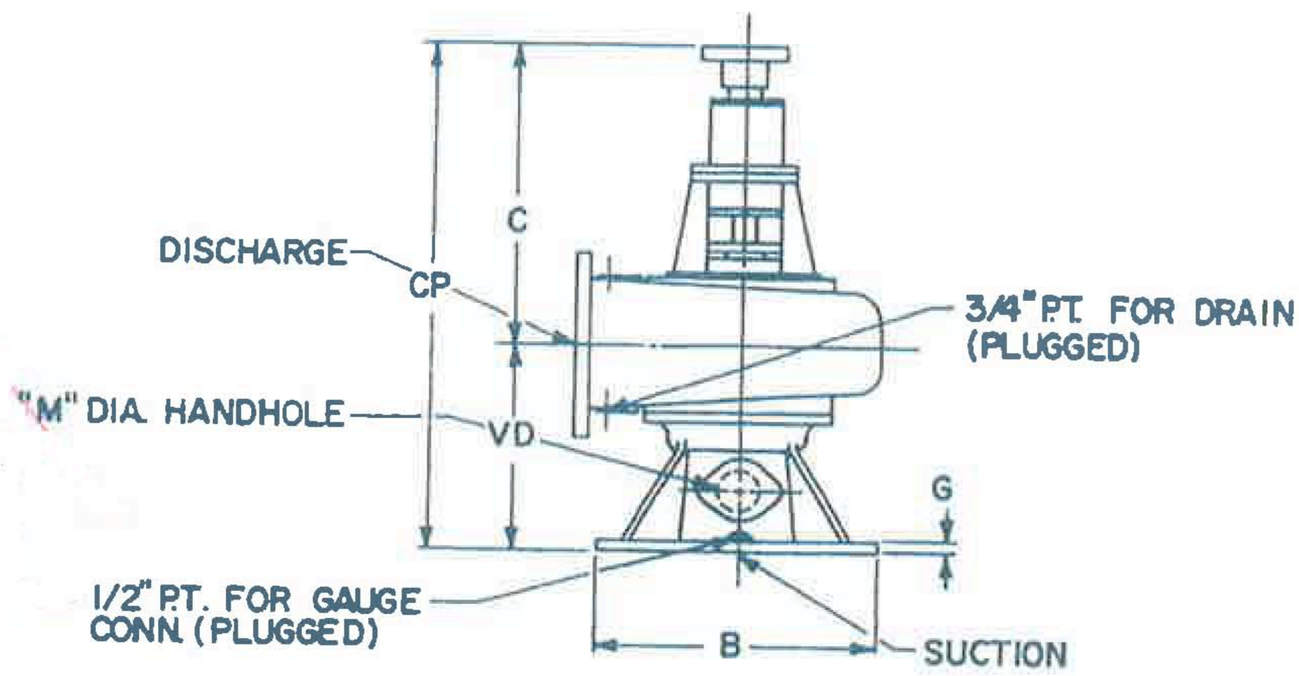
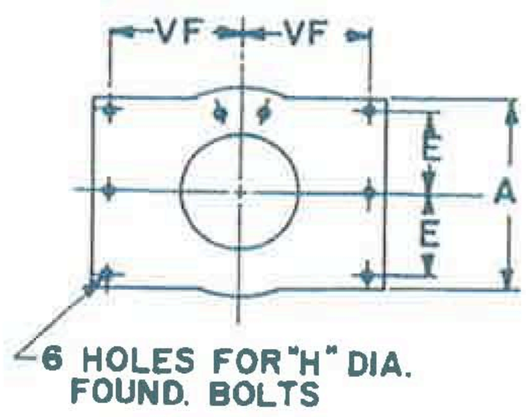
PUMP MOUNTING
16, 20, & 24 PUMPS