CITY OF HOUSTON
INVITATION TO BID

Revised Issued: February 20, 2015

Bid Opening:
Sealed bids, in duplicate, will be received by the City Secretary of the City of Houston, in the City Hall Annex, Public Level, 900 Bagby, Houston, Texas 77002, until 10:30 a.m. Thursday, **February 26, 2015** and all bids will be opened and publicly read in the City Council Chamber, City Hall Annex, Public Level, 900 Bagby at 11:00 a.m. on that date for the purchase of:

AUTOMOBILES, VANS, UTILITY VEHICLES, AND LIGHT DUTY TRUCKS
FOR
VARIOUS DEPARTMENTS
BID INVITATION NO. S38-N25104
NIGP: 071-06

Buyer:
Questions regarding this solicitation package should be addressed to**, Lena Farris at 832-393-8729,** or e-mail to **lena.farris@houstontx.gov**

Bidding forms, specifications, and all necessary information should be downloaded from the Internet at http://purchasing.houstontx.gov by registering and downloading this solicitation document, all updates to this solicitation document will be automatically forwarded via e-mail to all registered bidders. This information may also be obtained from the Supplier Assistance Desk, Strategic Purchasing Division, 901 Bagby, Concourse Level, Houston, Texas 77002.

Electronic Bidding:
In order to submit a bid for the items associated with this procurement, you must fill in the pricing information on the **"PLACE BID"** page.

Pre-Bid Conference:
A Pre-Bid Conference **was held** for all Prospective Bidders in the Strategic Purchasing Division, Conference Room No.1, City Hall/City Hall Annex Tunnel, 900 Bagby, at **1:00 P.M.** on **Tuesday, January 6, 2015.**

All Prospective Bidders were urged to be present. It is the bidder's responsibility to ensure they have secured and thoroughly reviewed the solicitation documents prior to the Pre-Bid Conference. Any revisions to be incorporated into this solicitation document arising from discussions before, during and subsequent to the Pre-Bid Conference will be confirmed in writing by Letter(s) of Clarification prior to the bid due date. Verbal responses will not otherwise alter the specifications, terms and conditions as stated herein.

The place of the bid opening may be transferred in accordance with Paragraph (b), (5) of Section 15-3 of The Code of Ordinances, Houston, Texas. The bid opening meeting may be rescheduled in accordance with Paragraph (b), (6) of said Section 15-3.

The City reserves the right to reject any or all bids or to accept any bid or combination of bids deemed advantageous to it.

City Employees are prohibited from bidding on this solicitation in accordance with the Code of Ordinances, Section 15 - 1.

*CONTENTS:

SECTION A: OFFER
SECTION B: SCOPE OF WORK/SPECIFICATIONS
SECTION C: GENERAL TERMS & CONDITIONS

***NOTE 1: Actual page numbers for each Section may change when the solicitation document is downloaded from the Internet or because of Letters of Clarification. Therefore, Bidders must read the bid document in its entirety and comply with all the requirements set forth therein.**

***NOTE 2: To be considered for award, please submit the electronic bid form and the forms listed in Section A, including the official signature page, which must be signed by a company official authorized to bind the company.**

INSTRUCTIONS for BIDDING and TERMS & CONDITIONS

NOTE: It is the policy of the City of Houston that a sealed, signed bid must be submitted to the City Secretary by the due date. After you submit your bid online, please print the online Official Bid Form and signature page, sign, and turn in to the City Secretary.

1. All bids must show the full name of the firm bidding and must be on the online Official Bid Form. Bids should be filed in duplicate and at least one copy of the online Official Bid Form must be manually signed in ink by an authorized officer of the company and their title must be shown. Obligations assumed by the signature must be fulfilled. **The bid number, title of the bid, and the bid due date must be shown on the front of the envelope(s) containing the Bid Form(s) when submitted to the Office of the City Secretary, Public Level, Room No. P101, City Hall Annex, 900 Bagby Street, Houston, TX 77002.**

2. **TIME AND DATE:** Bids **MUST** be in the Office of the City Secretary, City Hall Annex, Public Level, 900 Bagby, Houston, Texas 77002 at or before 10:30 A.M. on the day bids are due; an early postmark will not suffice. Be sure you have allowed ample time for postal delivery. **CAUTION**: Bids mailed on the day before bids are due may not be received in time to be considered.

3. **WITHDRAWAL OF BID OFFER**: If the bid has been submitted to the City Secretary, a bidder may withdraw its offer before the expiration of the time during which the offer may be submitted, without prejudice, by submitting a written request for its withdrawal to the City Secretary. The bidder should follow instructions listed on the Strategic Purchasing Division website to withdraw any bid submitted through the online bidding process.

4. The online Official Bid Form should indicate the Unit Price for the specified item(s). The Unit Price shall be inclusive of all costs, insurance and freight. **Cash discounts will not be considered in the award of bids.**

5. No change in price will be considered after bids have been opened.

6. Provisions of the City's online Official Bid Form, Specifications, and General Terms & Conditions shall not be altered. Any alteration of figures or terms may invalidate the bid on the item which the alteration is made. Submission or attachment of company "QUOTATION FORMS" containing alternative terms and/or conditions is not acceptable and may result in your bid being determined non-responsive.

7. If bidder wishes to submit more than one bid on the same item, separate online City Official Bid Forms for each bid, complete with its own original signature page, must be submitted both online and to the City Secretary.

8. All bids are for delivery not later than the time stated in the specifications, Prepaid F.O.B. Destination, the point of delivery stated in the Specifications and/or Bid Form.

9. Bidders are invited to be present at the opening of bids. After opening, bids may be inspected in the City Secretary's Office, City Hall Annex, Public Level, 900 Bagby, Houston, Texas 77002.

10. **Cost of Bid/Proposal Preparation:** The City shall not reimburse the cost of developing, presenting or providing any response to this solicitation. Offers submitted for consideration should be prepared simply and economically, providing adequate information in a straightforward and concise manner.

SECTION A

FLEET FORMAL BID

MULTI-YEAR YEAR CONTRACT

FOR THE PURCHASE OF
AUTOMOBILES, VANS, UTILITY VEHICLES, AND LIGHT DUTY TRUCKS
FOR
VARIOUS DEPARTMENTS

BID INVITATION NO. S38-N25104
NIGP: 071-06

To the Honorable Mayor
and City Council Members
of the City of Houston, Texas (the "City")

The undersigned hereby offers to furnish and deliver prepaid F.O.B. destination point Houston, Texas **Automobiles, Vans, Utility Vehicles and Light Duty Trucks as** listed on the **electronic bid form** and on individual Purchase Orders, in accordance with the price(s) bid and other conditions shown herein, and in accordance with the City's Specifications and General Terms & Conditions and/or samples/drawings provided herein. When issued by the City of Houston, Letters of Clarification shall automatically become part of this bid document and shall supersede any previous specifications or provisions in conflict with the Letters of Clarification. It is the responsibility of each bidder to ensure it has obtained all such Letters. By submitting a bid on this project, bidder shall be deemed to have received all Letters of Clarification and to have incorporated them into the bid.

The City may accept this bid offer by issuance of a Notice of Award Letter and/or a Purchase Order at any time on or before the 120th day following the day this Official Bid Form is opened by the City. This offer shall be irrevocable for 120 days after bid opening or for 90 days after City Council awards the bid, whichever comes last, but this period may be extended by written agreement of the parties.

The City reserves the option, after bids are opened, to adjust the quantities on the item(s) listed on the following page(s) upward or downward, subject to the availability of funds, and/or make award(s) on a line item basis.

SECTION A

Bidding forms, specifications, and all necessary information should be downloaded from the Internet at http://purchasing.houstontx.gov by registering and downloading this solicitation document

Additional Required Forms to be Included with this Bid:

In addition to the electronic Bid Form and the Official Signature Page, the Forms listed in Table 1 **must be completed and submitted to the Office of the City Secretary on or before the date and time the bid is due:**

Table 1 - Required Forms
http://purchasing.houstontx.gov/forms/Affidavit_of_Ownership.doc
http://purchasing.houstontx.gov/forms/Bidders_Attachments_Fleet.doc
http://purchasing.houstontx.gov/forms/Conflict_of_Interest_Questionnaire.doc
http://purchasing.houstontx.gov/forms/Fair_Campaign_Ordinance.doc
http://purchasing.houstontx.gov/forms/Hire_Houston_First_Affidavit.pdf
http://purchasing.houstontx.gov/forms/Statement_of_Residency.doc

Table 2 lists other documents and forms that should be viewed/downloaded from the City's website, but are not required to be submitted with the bid. The City will request these forms, as applicable, to be completed and submitted to the City by the recommended/successful bidder:

Table 2 - Documents and Forms
http://purchasing.houstontx.gov/forms/Drug_Forms.doc
http://purchasing.houstontx.gov/forms/EEOC.doc
http://purchasing.houstontx.gov/forms/Equipment_Inspection_&_Receiver.doc
http://purchasing.houstontx.gov/forms/MWBE.doc

BID INTENTION:

It is the intention of The City of Houston, Strategic Procurement Division to secure fixed pricing, and product availability for a period of no less than two years, with a third and fourth year option upon mutual consent.

Pricing shall be fixed for the first two years (vehicle model years 2015 and 2016). Each bidder shall provide, at time of bid submission, a dealer invoice indicating current manufacture pricing for each model bid. The documentation shall be used to determine the "manufacture cost increase" for the third and fourth option years.

The Contractor(s)/Supplier(s) who is/are awarded the contract shall be allowed to increase unit costs up to the new manufacture's invoice cost by supplying the City's Strategic Procurement Division with a current manufacture's invoice to determine the difference between the original manufactures invoice provided to the City at time of original bid submission, and the current manufacture's cost at the start of the third and fourth year option. The difference between the two manufacture's invoices shall be the allowable cost increase per vehicle model.

No cost increases shall be allowed during the first two years (vehicle model years 2015 and 2016) of the contract.

Questions concerning this Bid should be submitted in writing to: City of Houston, Strategic Purchasing Division, 901 Bagby, Suite B400, Houston, TX 77002, Attn: Lena Farris or via fax: 832-393-8758 or via email (preferred method) to lena.farris@houstontx.gov no later than Monday, January26, 2015.

HIRE HOUSTON FIRST ORDINANCE:
http://www.houstontx.gov/hbsc/hirehoustonfirstordinance.pdf

Designation as a City Business or Local Business

To be designated as a City or Local Business for the purposes of the Hire Houston First Program, as set out in Article XI of Chapter 15 of the Houston City Code, a bidder or proposer must submit the **Hire Houston First Application and Affidavit ("HHF Affidavit")** to the Director of the Mayor's Office of Business Opportunities and receive notice that the submission has been approved prior to award of a contract. Bidders are encouraged to secure a designation prior to submission of a bid or proposal if at all possible.

Download the HHF Affidavit from the Office of Business Opportunities Webpage at the City of Houston e-Government Website at the following location:
http://www.houstontx.gov/hbsc/hirehoustonfirstaffidavit.pdf

Submit the completed application form to: Mayor's Office of Business Opportunity, One Stop Business Center, 900 Bagby St., Public Level, Houston, TX 77002 or Application may be submitted via e-mail to HHF-MOBO@houstontx.gov or faxed to 832.393.0952.

Award of a Procurement of $100,000 or More for Purchase of Goods:

THE CITY WILL AWARD THIS PROCUREMENT TO A "CITY BUSINESS," AS THAT TERM IS DEFINED IN SECTION 15-176 OF THE CITY OF HOUSTON CODE OF ORDINANCES ("THE CODE"):

- **IF THE BID OF THE CITY BUSINESS IS THE LOWEST RESPONSIBLE BID OR IS WITHIN 3% OF THE LOWEST BID RECEIVED, AND**
- **UNLESS THE USER DEPARTMENT DETERMINES THAT SUCH AN AWARD WOULD UNDULY INTERFERE WITH CONTRACT NEEDS, AS PROVIDED IN SECTION 15-181 OF THE CODE.**

IF THERE IS NO BID OF A CITY BUSINESS THAT MEETS THESE CRITERIA, THE CITY WILL AWARD THE PROCUREMENT TO THE LOWEST RESPONSIBLE BIDDER.

Award of Procurement under $100,000 for Purchase of Goods:

THE CITY WILL AWARD THIS PROCUREMENT TO A " CITY BUSINESS," AS THAT TERM IS DEFINED IN SECTION 15-176 OF THE CITY OF HOUSTON CODE OF ORDINANCES ("THE CODE"):

- **IF THE BID OF THE CITY BUSINESS IS THE LOWEST RESPONSIBLE BID OR IS WITHIN 5% OF THE LOWEST BID RECEIVED, AND**
- **UNLESS THE USER DEPARTMENT DETERMINES THAT SUCH AN AWARD WOULD UNDULY INTERFERE WITH CONTRACT NEEDS, AS PROVIDED IN SECTION 15-181 OF THE CODE.**

IF THERE IS NO BID OF A CITY BUSINESS THAT MEETS THESE CRITERIA, THE CITY WILL AWARD THE PROCUREMENT TO THE LOWEST RESPONSIBLE BIDDER.

Award of Procurement that may be More or Less than $100,000 for Purchase of Goods:

THE CITY WILL AWARD THIS PROCUREMENT TO A " CITY BUSINESS," AS THAT TERM IS DEFINED IN SECTION 15-176 OF THE CITY OF HOUSTON CODE OF ORDINANCES ("THE CODE"):

- **IF THE BID OF THE CITY BUSINESS IS LESS THAN $100,000 AND IS THE LOWEST RESPONSIBLE BID OR IS WITHIN 5% OF THE LOWEST BID RECEIVED, OR**
- **IF THE BID OF THE CITY BUSINESS IS MORE THAN $100,000 AND IS THE LOWEST RESPONSIBLE BID OR IS WITHIN 3% OF THE LOWEST BID RECEIVED, AND**
- **UNLESS THE USER DEPARTMENT DETERMINES THAT SUCH AN AWARD WOULD UNDULY INTERFERE WITH CONTRACT NEEDS, AS PROVIDED IN SECTION 15-181 OF THE CODE.**

IF THERE IS NO BID OF A CITY BUSINESS THAT MEETS THESE CRITERIA, THE CITY WILL AWARD THE PROCUREMENT TO THE LOWEST RESPONSIBLE BIDDER.

NO CONTACT PERIOD:

Neither bidder(s) nor any person acting on bidder(s)'s behalf shall attempt to influence the outcome of the award by the offer, presentation or promise gratuities, favors, or anything of value to any appointed or elected official or employee of the City of Houston, their families or staff members. All inquiries regarding the solicitation are to be directed to the designated City Representative identified on the first page of the solicitation. Upon issuance of the solicitation through the pre-award phase and up to the award, aside from bidder's formal response to the solicitation, communications publicly made during the official pre-bid conference, written requests for clarification during the period officially designated for such purpose by the City Representative, neither bidder(s) nor persons acting on their behalf shall communicate with any appointed or elected official or employee of the City of Houston, their families or staff through written or oral means in an attempt to persuade or influence the outcome of the award or to obtain or deliver information intended to or which could reasonably result in an advantage to any bidder. However, nothing in this paragraph shall prevent a bidder from making public statements to the City Council convened for a regularly scheduled session after the official selection has been made and placed on the City Council agenda for action.

LOBBYING AND OTHER FORMS OF INFLUENCE PROHIBITED:

Neither Bidder(s) nor any person acting on Bidder(s)'s behalf shall attempt to influence the outcome of the award by the offer, presentation or promise of gratuities, favors, or anything of value to any appointed or elected official or employee of the City of Houston, their families or staff members. All inquiries regarding the solicitation are to be directed to the designated City Buyer identified on the first page of the solicitation. Upon issuance of the solicitation through the pre-award phase and up to the award, aside from Bidder's formal response to the solicitation, communications publicly made during the official pre-bid conference, written requests for clarification during the period officially designated for such purpose by the City Buyer, neither Bidder(s) nor persons acting on their behalf shall communicate with any appointed or elected official or employee of the City of Houston, their families or staff through written or oral means in an attempt to persuade or influence the outcome of the award or to obtain or deliver information intended to or which could reasonably result in an advantage to any Bidder. However, nothing in this paragraph shall prevent Bidder from making public statements to the City Council body convened for a regularly scheduled session after the official selection has been made and placed on the City Council agenda for action.

SECTION B

PART I
GENERAL SPECIFICATIONS

1.0 SCOPE:

1.1 This specification covers automobiles, vans, utility vehicles, pickup trucks and light-duty cabs & chassis and bodies required by the various departments of the City of Houston.

2.0 APPLICABLE SPECIFICATIONS:

2.1 The applicable specifications are comprised of the "Instructions for Bidding and Terms & Conditions", "Official Bid Forms", the "General Specifications", the "Technical Equipment Specifications", the "General Terms and Conditions", and other specifications that may be included herewith and the purchase orders which refer to these specifications.

2.2 LEV Vehicles:

2.2.1 All Low Emission Vehicles (LEV) must meet or exceed the Federal Low Emission Vehicle Certification.

2.3 **E85 FLEX FUEL ENGINES**: All vehicles are to be delivered with E85 Flex fuel engines if available at no additional cost.

3.0 BIDDING:

3.1 Pricing for Vehicles:

3.1.1 Bidders may bid on one or more of the vehicle series.

3.1.2 Bids containing limitations on the minimum or maximum number of vehicles to be purchased may not be considered in some cases.

3.1.3 A bid on any vehicle series must contain a Unit Price for the vehicle. Bids that contain unit pricing for the vehicle options only will be deemed as non-responsive and will not be considered.

3.1.4 The Unit Price for any specified vehicle shall be defined as the price for the manufacturer's standard model, furnished complete with all standard equipment and factory installed accessories listed in the manufacturer's printed literature for the respective unit, and any additional equipment defined herein by the City of Houston that is to be included in the Vehicle Unit Price.

3.2 Pricing for Specified Options:

3.2.1 An Option Unit Price is required on every listed option for the vehicle series on which bidder is submitting a bid.

3.2.2 If a bidder "no bids" any option for which bids are requested in a particular vehicle series, and the option is available, **the bid for that vehicle series will be deemed as non-responsive and will be rejected.**

3.3 Special Bidding Instructions:

3.3.1 A bidder, by affixing its signature on the Official City Bid Form, has offered to furnish the vehicles and equipment as specified herein in accordance with these specifications and all provisions set forth in this bid document. As such, it is the bidder's responsibility to adhere to these specifications. **No exception or deviation to the published specifications will be accepted.**

3.3.2 It is the intent of the City of Houston to purchase the vehicle identified in a particular Series. For example, if the City requests a bid for the Series 353A, Compact Automobile, a model substitution normally purchased under Series 360B, Intermediate Automobile, is not acceptable.

3.0 BIDDING (Continued):

3.3.3 In the official e-bid form, if the bidder intends to not submit a bid for a vehicle series or any option listed for that vehicle series, bidder shall check the "No Bid" Box.

3.3.4 In the official e-bid form, for any optional equipment requested, if the equipment that is requested is included as standard equipment by the manufacturer, or is offered by the bidder at no charge, the bidder shall check the “No Charge” Box, which will then indicate “$0.00” in the Unit Price column.

3.3.5 Throughout these specifications, compatibility is of the essence and any modification, accessory, device, material or type of construction, whether to existing or to the specified equipment, which may be necessary to incorporate the specified equipment into the existing equipment shall be considered to be a part of these specifications whether detailed by item or not.

3.4 The City may accept this bid offer by issuance of a Notice of Award Letter and/or a Purchase Order covering award of bid to the Contractor/Supplier at any time on or before the 120th day following the day the Official Bid Form is opened by the City. This offer shall be irrevocable for 120 days after bid opening or for 90 days after City Council awards the bid, whichever comes last, but this period may be extended by written agreement of the parties.

3.5 **FIRM PRICING: Pricing shall be fixed for the first two years (vehicle model years 2015 and 2016). Each bidder shall provide, at time of bid submission, a dealer invoice indicating current manufacture pricing for each model bid. The documentation shall be used to determine the “manufacture cost increase” for the third and fourth option years.**

3.5.1 The Contractor(s)/Supplier(s) who is/are awarded the contract shall be allowed to increase unit costs up to the new manufacture’s invoice cost by supplying the City’s Strategic Procurement Division with a current manufacture’s invoice to determine the difference between the original manufactures invoice provided to the City at time of original bid submission, and the current manufacture’s cost at the start of the third and fourth year option. The difference between the two manufacture’s invoices shall be the allowable cost increase per vehicle model.

3.5.2 No cost increases shall be allowed during the first two years (vehicle model years 2015 and 2016) of the contract.

4.0 AWARD:

4.1 Awards will be made on the basis of the low total bid price, which includes Total Vehicle Price and Total Option Price(s) for each particular line item vehicle series meeting all specifications referenced herein.

5.0 NEW MODELS:

5.1 All vehicles and items proposed shall be new, manufacturer’s latest make and model in current production at the time of delivery, as offered to commercial trade and shall be furnished complete with all factory-installed standard equipment and accessories listed in the manufacturer’s latest literature for the respective unit and any additional optional equipment as may be defined in the detailed Technical Specifications, with such exception as may be described in the detailed specifications.

6.0 MAKES, MODELS AND LITERATURE:

6.1 Manufacturer's name, trade names, name of models, etc., may be listed in these specifications for the sole purpose of describing items that are considered as being reasonably satisfactory for the intended uses.

6.2 Technical literature may be provided with the bid submittal but is not required. However, the City reserves the right to request and require literature and/or clarifications, as needed, after bid submittal. To evaluate the bids, the user department and the City purchasing staff may require product literature/specification sheets. If required, Bidder must submit a minimum of ONE SET of the requested catalogue information, and/or descriptive literature. Bidder(s) shall furnish the requested literature within seven (7) calendar days after the receipt of the City's written request. FAILURE ON BIDDER'S PART TO FURNISH THE REQUESTED TECHNICAL DATA IN THE TIME LIMIT SPECIFIED MAY BE CAUSE FOR REJECTION OF THE BID.

7.0 VEHICLES, EQUIPMENT AND ACCESSORIES:

7.1 All units to be furnished shall be standard models as distinguished from deluxe or custom models unless otherwise clearly specified in the detailed specifications. Body styles will be identified in the detailed specifications. Vehicles shall be delivered to the City installed with all standard equipment and accessories as listed in the manufacturer's latest printed literature, with such exception as may be described in the detailed specifications. Vehicles shall comply with all Federal Motor Vehicle Safety Standards and State of Texas Safety Regulations applicable to the specified vehicle on the date of manufacture. Any equipment or accessories requested shall be factory-installed and shall be as represented in the manufacturer's current technical data. If any item is not available as factory-installed, then dealer-installed equipment may be substituted for that item. Any components removed from the vehicles for dealer-installed optional equipment shall remain the property of the City of Houston and shall be provided with the delivery of the completed vehicle.

8.0 OPTIONAL BODIES AND OTHER EQUIPMENT:

8.1 The successful Contractor/Supplier will be responsible for installing optional bodies and/or special equipment to the cabs and chassis and delivering the completely assembled units to the designated delivery point. All components removed from the cabs and chassis in order to install optional bodies and/or special equipment shall remain the property of the City of Houston and shall be provided with the delivery of the completed vehicle.

9.0 CONTRACTOR/SUPPLIER ADVERTISING:

9.1 Contractors/Suppliers shall not place any decal, plate, sign, stencil, stamping, molding, or marking of any type pertaining to advertisement other than trademarks, trade names, or model designation normally installed by the manufacturer on automotive equipment, either automobile or truck, delivered to the City of Houston. No accessory item furnished on truck or special body equipment shall advertise the name of the Contractor/Supplier (i.e. mud flaps, etc.).

10.0 LICENSES AND PERMITS:

10.1 Contractors/Suppliers are to adhere to all applicable federal, state as well as local laws and regulations. It is the Contractor/Supplier's responsibility to acquire all necessary licenses and permits required by law.

10.2 Contractor/Supplier shall be responsible for securing any and all inspections required by law, including State Inspection stickers. Any fee charged for these inspections shall be the responsibility of the Contractor/Supplier and not the City of Houston.

10.3 At the time of delivery to the City of Houston, Contractors/Suppliers are required to provide temporary paper license tags/plates for motor vehicles or other equipment required by the State of Texas to be registered for operation on public highways.

10.4 **TEXAS OCCUPATIONS CODE, TITLE 14, CHAPTER 2301** (Formerly known as "The Texas Motor Vehicle Commission Code"):

10.4.1 Section 2301.251: License Required: Generally (a) Unless a person holds a license issued under this chapter authorizing the activity, the person may not (1)engage in business as, serve in the capacity of, or act as a dealer, manufacturer, distributor, converter, representative, vehicle lessor, or vehicle lease facilitator in this state.

10.0 LICENSES AND PERMITS: (Continued)

10.4.2 Sec. 2301.252: License required: Sale of New Motor Vehicles:(a) A person may not engage in the business of buying, selling, or exchanging new motor vehicles unless the person: (1) holds a franchised dealer's license issued under this chapter for the make of new motor vehicle being bought, sold, or exchanged; or (2) is a bona fide employee of the holder of a franchised dealer's license.

10.4.3 **Licensed Franchised Dealers** submitting bids for new cabs & chassis with installed bodies and other equipment, by this Statute, are required to employ **properly licensed converters** for the conversions of the new motor vehicles.

10.4.4 **The Act of Submitting a Bid is regarded as doing business, as the entity is soliciting a sale.** Accordingly, each bidder must be a **licensed franchised dealer** at the time the bid is submitted.

11.0 CERTIFICATE, WARRANTIES AND INVOICES:

11.1 Manufacturer's Certificate of Origin shall be made out to "City of Houston, Texas", 900 Bagby, 2nd Floor, Houston, TX 77002 and delivered to the Fleet Management Department representative at the time of delivery of the vehicle. Please note that the Certificate of Title will not meet this requirement. Warranties and copy of invoices shall also accompany each delivery.

12.0 CURB WEIGHT, DEVOID OF PAYLOAD:

12.1 The curb weight of vehicle is defined as the weight in pounds of the complete vehicle. Curb weight shall include the chassis, cab and body, all attached devices, equipment, full complement of fuel lubricants and coolants.

13.0 PAYLOAD CAPACITY:

13.1 Payload specified is defined as the minimum net weight required for occupants, body/cargo carrying capacity value stated in pounds required of each vehicle. The payload shall be evenly distributed in accordance with vehicle design and intended use.

14.0 GROSS VEHICLE WEIGHT RATING (GVWR):

14.1 Gross Vehicle Weight Rating means the loaded weight in pounds of a single vehicle. Manufacturers shall provide a rating label showing the actual GVWR of the vehicle furnished.

15.0 DIMENSIONS:

15.1 Unless otherwise specified, the cab to axle (CA) dimension provided shall permit an excess of 50 percent of the outside body length forward of the rear axle centerline, plus 3 inches for cab and body clearance.

16.0 WHEELBASE:

16.1 Unless specified or required by the stated CA dimensions, wheelbase shall be the manufacturer's shortest for the type and model specified.

17.0 SAFETY AND AIR POLLUTION REQUIREMENTS AND REGULATIONS:

17.1 The units bid shall be in full and complete compliance with all applicable safety and pollution requirements and regulations in effect at the time of bid submittal. This includes but is not limited to standards established by the United States Department of Transportation, including the Federal Motor Vehicle Safety Standards (FMVSS), the Occupational Safety and Health Administration (OSHA), the Environmental Protection Agency (EPA), the Texas Department of Transportation and the Texas Commission on Environmental Quality (TCEQ).

17.0 SAFETY AND AIR POLLUTION REQUIREMENTS AND REGULATIONS: (Continued)

17.2 The City of Houston requires that the units bid be the lowest emission units, i.e. Nitrogen Oxides (NOx) and Fine Particulate Matter (PM) without increasing Hydrocarbons (HC), available on the market for the specified equipment. The emission standards established by the EPA shall be considered only as minimum standards. In the absence of EPA standards or if California Air Resources Board (CARB) standards provide lower emissions, CARB standards will be considered as the minimum if the specified unit and any required fuel is available to the City of Houston. Federally regulated engines must be covered by an EPA-issued Certificate of Conformity certifying the engine to be in compliance with federal emission standards and the Contractor/Supplier shall provide the Certificate of Conformity with their bid or within three calendar days from the written request of the City. EPA emission label must be affixed to the vehicle and/or engine and be readily visible.

18.0 HEAVY DUTY EQUIPMENT AND ACCESSORIES:

18.1 The term "heavy duty" as used to describe an item, shall mean in excess of the usual quantity, quality, or capacity that is normally supplied with the standard production vehicle or component.

19.0 COOLING SYSTEM:

19.1 The cooling system shall be protected with not less than 50/50 solution of permanent type antifreeze and a coolant overflow recovery tank and compensating system if available. The manufacturer shall provide the heaviest duty component and maximum size cooling system applicable to the model offered.

20.0 SUSPENSION SYSTEM:

20.1 Vehicles equipped with dual rear wheels shall be furnished with auxiliary rear springs, or other type springing that has a rated capacity at least 10 percent greater than the primary spring requirements for the GVWR.

21.0 WHEELS AND TIRES:

21.1 Wheels and tires, including spare, shall be alike in type and size. *Unless specified otherwise,* if a space saving spare assembly is the type offered on the specified model, it will be accepted. Vehicles requiring (STD) tires when equipped with P-Metric Tires shall be furnished with the Contractor/Suppliers "extra load rated" tires when optionally available. Spare tire without tire pressure monitor is acceptable.

22.0 ELECTRIC SYSTEM:

22.1 The electrical systems equipment and components furnished for the specified bodies devices and equipment shall comply with all applicable SAE recommended standards and practices.

23.0 ALTERNATOR AND BATTERY:

23.1 When heavy-duty (HD) is specified, the Contractor/Supplier shall furnish on the vehicle the next heaviest duty OEM component(s) available for the model (Item). Batteries furnished shall be the maintenance free types when available. When electrical power consuming equipment is furnished, the Contractor/Supplier shall provide a generating system capable of supplying the total continuous electrical load of the vehicle and equipment furnished plus 10 percent. Battery ratings shall comply with SAE J 537.

23.2 The electrical equipment installed on these vehicles shall be suppressed to the limitations of SAE J 551.

24.0 WARRANTY:

24.1 For Non-Hybrid Vehicles:

24.1.1 A minimum of 36-months/36,000 miles bumper-to-bumper manufacturer's warranty with no deductibles on both materials and workmanship shall be provided for basic coverage.

24.1.2 3 years/36,000 miles on emission controls

24.1.3 3 years/36,000 miles, No deductible on power train

24.1.4 5 years/100,000 miles on corrosion rust through

24.0 WARRANTY: (Continued)

24.2 For Hybrid Vehicles:

24.2.1 A minimum of 36-months/36,000 miles bumper-to-bumper manufacturer's warranty with no deductibles on both materials and workmanship shall be provided for basic coverage.

24.2.2 8 years/80,000 miles on hybrid system

24.2.3 3 years/36,000 miles, no deductible on power train.

24.2.4 5 years/100,000 miles on corrosion rust through.

24.3 For Light-Duty Cab & Chassis:

24.3.1 A minimum of 36-month/36,000 mile bumper-to-bumper manufacturer's warranty with no deductible on both materials and workmanship shall be provided for basic coverage.

24.3.2 Five (5)-year/50,000 miles on emission controls.

24.3.3 Three (3)-year/36,000 miles, no deductible on power train.

24.3.4 Five (5)-year/100,000 miles on corrosion rust through.

24.4 For Body Options:

24.4.1 One (1) year manufacturer's warranty (complete) on service bodies and any listed options installed by the manufacturer. If manufacturer's standard warranty is longer, the City of Houston shall accept the longer warranty. Both parts and labor shall be included.

24.4.2 Three (3) year manufacturer's warranty on service bodies and any options installed by manufacturer for rust perforation. Body parts and labor shall be included.

24.4.3 One (1) year warranty for any option that will be required by the City of Houston and installed by the Contractor/Supplier. This shall include rust perforation, parts and labor.

24.4.4 The Contractor/Supplier shall handle all warranty claims and all work shall be completed within ten (10) calendar days after receipt of equipment.

24.5 Any and all documents necessary to effect manufacturer's warranty shall be properly applied for and submitted by the Contractor/Supplier. The Contractor/Supplier shall provide to the City a manufacturer's warranty which will be honored by any of the manufacturer's authorized dealers and a compete copy shall be provided at the time of delivery. When additional warranties are available as standard, they shall be included as a part of the bid for the benefit of the City. Any warranty work is to be completed within ten (10) calendar days after the receipt of the vehicle by the Contractor/Supplier without cost to the City.

24.6 **DELAYED WARRANTIES** must be available for all vehicles and equipment. Warranty start date shall be effective the date **that the completed unit is placed into service by the City.** The Contractor/Supplier shall furnish a delayed warranty card/document for each unit delivered and/or advise the City's Fleet Management/receiving department of the procedures to be followed for obtaining the delayed start of warranty coverage. Requests for delayed warranties will not exceed six months after delivery.

24.7 Contractor/Supplier shall provide a Manufacturer's Authorized Facility located within the Houston-Galveston Region (Harris County and its seven adjacent counties) for all warranty and maintenance service.

25.0 DELIVERY/INSPECTION REQUIREMENTS:

25.1 Unit(s) as specified herein, with delivery ticket, copy of original invoice, Certificate of Origin and other required documents and manuals, if required, shall be delivered **Prepaid F.O.B. DESTINATION POINT**, to the locations indicated on individual City of Houston Purchase order as follows:

25.1.1 **All automobiles, vans, utility vehicles, pickup trucks and cabs & chassis without bodies shall be delivered within 120 calendar days of receipt of purchase order.**

25.1.2 **All cabs and chassis, complete with optional bodies and any required equipment (if applicable), shall be delivered within 180 calendar days of receipt of purchase order.**

25.2 **Equipping and Servicing**:

25.2.1 All vehicles shall be delivered completely assembled, serviced, adjusted and all equipment including standard and optional equipment shall be installed and the units shall be fully operational. If vehicles are not fully operational, it shall be the Contractor/Supplier's responsibility to have the units made fully operational prior to acceptance.

25.2.2 New Vehicle Pre-Delivery Service:
To be performed before the new vehicles are delivered to the City, shall include but not limited to the following services:

25.2.2.1 All fluids levels checked and maintained with the proper grade and type of fluids.

25.2.2.2 All vehicles shall have a minimum of 1/4 tank of fuel at the time of the delivery/inspection.

25.2.2.3 Pre-delivery inspection and service on the vehicles.

25.2.2.4 The Contractor/Supplier or its representative who is responsible for the final delivery shall provide, along with the other delivery documents, signed certificates stating that the above listed services were performed for the units being delivered and that the units are ready for continuous operation.

25.2.2.5 The interior of all units shall have been cleaned and the exterior washed.

25.2.2.6 The Contractor/Supplier or its representative who is responsible for the final delivery shall provide, along with the other delivery documents, signed certificates stating that the above listed services were performed for the units being delivered and that the units are ready for continuous operation.

25.2.3 Miscellaneous:

25.2.3.1 Two operable keys will be provided for each different lock on the vehicles unless otherwise specified in the bid specifications.

25.2.3.2 Mud flaps, heavy duty, fiber reinforced anti-sail type where required by law, without any visible advertisements.

25.3 **Delivery/Inspection:**

25.3.1 The Contractor/Supplier shall notify the City contact listed under the "Ship To" section of the purchase order not less than three (3) business days prior to expected delivery/arrival date(s) to permit delivery/inspection scheduling. The City contact shall advise Contractor/Supplier as to the date, time and location of authorized delivery/inspection. An authorized representative of the Contractor/Supplier shall supervise delivery to the City. The City will not assume any liability for vehicle/equipment delivered to an unauthorized location and/or any vehicle/equipment delivered but not accepted by the City.

25.3.2 Each vehicle/equipment unit shall be inspected by the City before acceptance of delivery to determine its compliance with the specifications and/or to test its ability to perform for its intended use.

25.0 DELIVERY/INSPECTION REQUIREMENTS: (Continued)

26.3.3 Upon acceptance and receipt of the vehicle/equipment unit by the City, Contractor/Supplier shall obtain the signatures and employee numbers of the City's receiving employees on the City's Equipment Inspection/Receiver Report as attached hereto.

25.4 **Documentation at time of Delivery:**

Contractor/Supplier shall provide the following documentation **per purchase order** upon delivery:

- Copy of purchase order(s) and invoice(s).
- Manufacturer's Certificate of Origin (Shall be made out to "City of Houston, Texas", 900 Bagby, 2nd Floor, Houston, TX 77002-2527 and delivered to the Finance Department representative at the time of delivery of the vehicle/equipment).
- Temporary paper license tags/plates paperwork.
- Warranty policy(ies) and/or certifications as may be required in the Specifications.
- Parts, service, operator and maintenance manual(s) as may be required in the Technical Specifications.
- **Line sheets/line tickets from the manufacturer of the vehicle shall be provided for each vehicle and delivered along with other City-required documents and manuals. Each line sheet/line ticket shall list all components that make up the vehicle chassis and shall include the make, model, and serial number of each component. In addition, line sheets/line tickets shall be provided for all mounted bodies specified for cabs & chassis, and shall include but not be limited to manufacturer, serial number, size, and tare weight. All mounted equipment and components shall be listed by the manufacturer, serial number, weight restrictions (lifts, booms, hydraulic arms etc) and all other relevant data that identifies the component.**
- Weight Ticket Requirements per State of Texas Requirements for Title Transactions:
  - **A weight certificate shall be required on all new commercial motor vehicles covered by the manufacturer's certificate when the carrying capacity (in accordance with the State's Tonnage Rating Guidelines) is rated in excess of one ton by the manufacturer.**
  - **A weight certificate shall also be required when additional equipment has been added to the new commercial motor vehicle after it was delivered by the manufacturer.**

IMPORTANT NOTE: IF THE ABOVE REQUIRED DOCUMENTATION IS NOT PROVIDED AT DELIVERY, THE CITY OF HOUSTON WILL NOT ACCEPT THE UNIT(S).

26.0 LIQUIDATED DAMAGES:

26.1 Under the terms of this Contract (Purchase Order), the Contractor/Supplier certifies to complete delivery of any vehicle/equipment within the specified calendar days, listed in the Delivery Section of the Technical Specifications, counting from the date the City of Houston purchase order is received by the Contractor/Supplier. Contractor/Supplier agrees that time is of the essence in performance of this Contract. The Contractor/Supplier and the City of Houston understand and agree that a breach of contract as to completion on time will cause damages to the City and that the actual damages from the harm would be difficult to estimate accurately.

Therefore, for each and every calendar day that the vehicle/equipment is not delivered and/or accepted by the City beginning sixty-one (61) calendar days after the expiration of the time limit set in the Contract, the Contractor/Supplier shall be liable for and shall pay to the City the sum of **Fifty dollars ($50.00)** per vehicle/equipment per calendar day, or portion thereof, as liquidated damages and not as a penalty. It is further agreed that the sum stipulated as liquidated damages is a reasonable estimate of the damage that will result from a failure of the Contractor/Supplier to deliver the product/service in accordance with the Contract. The amount of the liquidated damages due may be deducted by the City from any payment or payments due to the Contractor/Supplier, or if all payments otherwise due to the Contractor/Supplier have been made, the amount of the liquidated damages shall be immediately due and payable upon demand.

26.0 LIQUIDATED DAMAGES: (Continued)

26.2 Contractor/Supplier will not be liable for delays in performing its obligations to the extent such delays are caused by unforeseeable conditions that are beyond the Contractor/Supplier's reasonable control and directly interfere with performance, and are without Contractor/Supplier's fault or negligence (force majeure). However, Contractor/Supplier shall provide written notice to the City of the cause and extent of an **excusable delay** resulting from unforeseeable conditions. Upon cessation of the event causing the delay, Contractor/Supplier shall provide written notice to the City of the actual delay incurred. Determination of force majeure shall rest solely with the City Purchasing Agent and the receiving department.

27.0 CONFLICT IN TERMS:

27.1 Should there be any conflict between the General Specifications and the Technical Specifications, the Technical Specifications shall prevail.

28.0 MISCELLANEOUS:

28.1 For purposes of this Contract, the phrase "City Purchasing Agent" shall be deemed to include both the City Purchasing Agent, and his or her designated representative(s).

28.2 Prospective bidders may offer/propose "equivalent equipment" as additional item(s) for City-approved equipment listings of acceptable equipment in this bid. Prospective bidders must submit, in writing to the City Purchasing Agent, 1) a request for approval of proposed equipment, 2) manufacturer's literature, and 3) a detailed comparison documenting that the equipment proposed is equivalent to existing equipment in the City-approved equipment listings. The approval request and all required documentation shall be in the Office of the City Purchasing Agent no later than 14 calendar days before the are scheduled to be opened and publicly read. Requests for equipment approval not received by the time specified above will not be considered for award. Determination as to whether the equipment proposed is equivalent to the items in the City-approved equipment listings shall rest solely with the City Purchasing Agent.

29.0 CONTRACTOR/SUPPLIER REFERENCES (SEE EXHIBIT NO. 1):

29.1 In order to receive bid award consideration, the bidder must be able to demonstrate that it has provided, as a contractor/supplier, products that are similar to those offered on the electronic bid form to governmental agencies or other entities within the last two years.

29.2 If this information is required by the City, the bidder shall provide the information on Exhibit Form No. 1 within seven (7) calendar days after receipt of the City's written request to do so. Failure by the Bidder to furnish the requested information in the time limit specified may be cause for the rejection of its bid.

EXHIBIT NO. 1

CONTRACTOR/SUPPLIER REFERENCES

In order to receive bid award consideration, the bidder must be able to demonstrate that it has provided, as a contractor/supplier, products that are similar to those offered on the electronic bid form to governmental agencies or other entities within the last two years. The references should be listed in the space provided below. Please attach additional pages as necessary. If references are not included with the bid, the bidder shall be required to provide such references to the City of Houston within five working days from receipt of a written request from the City of Houston to do so. **Bidder's capability and experience shall be a factor in determining the Contractor's responsibility.** The City of Houston reserves the right to determine if such products are appropriately similar to those offered.

1. Entity Name: _____

   Address: _____

   City & State: _____

   Name & Phone Number of Contact: _____

2. Entity Name: _____

   Address: _____

   City & State: _____

   Name & Phone Number of Contact: _____

3. Entity Name: _____

   Address: _____

   City & State: _____

   Name & Phone Number of Contact: _____

4. Entity Name: _____

   Address: _____

   City & State: _____

   Name & Phone Number of Contact: _____

5. Entity Name: _____

   Address: _____

   City & State: _____

   Name & Phone Number of Contact: _____

SECTION B

PART II
TECHNICAL SPECIFICATIONS

ITEM NO.	DESCRIPTION
1	SERIES 353A-LEV GASOLINE 4-CYLINDER COMPACT 4-DOOR SEDAN, MUST MEET OR EXCEED THE FEDERAL LEV CERTIFICATION AND INCLUDE THE FOLLOWING STANDARD EQUIPMENT (SAP NO. 10030742)

MANUFACTURER	**FORD**	**CHEVROLET**	**DODGE**
MODEL	FOCUS	CRUZE	DART

SPECIFICATION	MINIMUM REQUIREMENTS
WHEEL BASE (INCHES)	102
LENGTH (INCHES)	175
WIDTH (INCHES)	67
ENGINE DISPLACEMENT (LITERS)	1.8L-4 Cylinder
ENGINE HP	132
MILES PER GALLON (CITY/HIGHWAY)	24/34

STANDARD EQUIP. NO	DESCRIPTION
1	AIR CONDITIONING (INCLUDES OPT. 87)
37.1	COLORS, SOLID, O.E.M. STANDARD
73.2	MIRRORS, POWER, REARVIEW, LEFT & RIGHT SIDES
77	STEERING, POWER
91	RADIO, AM/FM
128	TRANSMISSION, AUTOMATIC
144	WIPERS, INTERMITTENT TYPE
200	WHEEL COVERS; STANDARD
208	REAR WINDOW DEFROSTER
209	POWER DOOR LOCKS/POWER WINDOWS
211	CLOTH SEATS
241	ANTI-LOCK BRAKE SYSTEM (OEM STANDARD)

OPTIONAL EQUIPMENT:

OPT. NO.	DESCRIPTION
238	FLOOR MATS (SAP NO. 10030744)

ITEM NO.	DESCRIPTION
2	SERIES 358E-HEV HYBRID GASOLINE/ELECTRIC 4-CYLINDER COMPACT 4-DOOR SEDAN, MUST MEET OR EXCEED THE FEDERAL LEV CERTIFICATION AND INCLUDE THE FOLLOWING STANDARD EQUIPMENT (SAP NO. 10013083)

MANUFACTURER	**TOYOTA**
MODEL	PRIUS

SPECIFICATION	**MINIMUM REQUIREMENTS**
WHEEL BASE (INCHES)	106
LENGTH (INCHES)	175
WIDTH (INCHES)	67
ENGINE DISPLACEMENT (LITERS)	1.8L 4-CYLINDER
ENGINE NET HP	98
MILES/GALLON (CITY/HIGHWAY)	51/48

STANDARD EQUIP. NO	DESCRIPTION
1	AIR CONDITIONING
37.1	COLORS, SOLID, (O.E.M. STANDARD)
73.2	MIRRORS, POWER, REARVIEW, LEFT & RIGHT SIDES
77	STEERING, POWER
91	RADIO, AM/FM
116	CRUISE CONTROL
128.2	CVT TRANSMISSION
144	INTERMITTENT WIPERS
200	WHEEL COVERS; OEM STANDARD
208	REAR WINDOW DEFROSTER
209	POWER DOOR LOCKS/POWER WINDOWS
211	CLOTH SEATS
241	ANTI-LOCK BRAKE SYSTEM (OEM STANDARD)

OPTIONAL EQUIPMENT:

OPT. NO.	DESCRIPTION
95	NAVIGATION SYSTEM WITH DISPLAY AND INTEGRATED BACKUP CAMERA (MANUFACTURER'S OEM EQUIPMENT) (SAP NO. 10047406)
238	FLOOR MATS (SAP NO. 10013084)

ITEM NO.	DESCRIPTION
3	SERIES 360B-LEV GASOLINE 4-CYLINDER INTERMEDIATE 4-DOOR SEDAN, FRONT WHEEL DRIVE, MUST MEET EXCEED THE FEDERAL LEV CERTIFICATION AND INCLUDE THE FOLLOWING STANDARD EQUIPMENT (SAP NO. 10013077)

MANUFACTURER	**FORD**	**CHRVROLET**	**DODGE**
MODEL	FUSION	MALIBU	200

SPECIFICATION	**MINIMUM REQUIREMENTS**
WHEEL BASE (INCHES)	107
LENGTH (INCHES)	190
WIDTH (INCHES)	72
ENGINE DISPLACEMENT (LITERS)	2.4L-4 CYLINDER
ENGINE (HP)	173
TORQUE (LB-FT)	166

STANDARD EQUIP. NO	DESCRIPTION
1	AIR CONDITIONING (INCLUDES OPT. 87)
37.1	COLORS, SOLID, (O.E.M. STANDARD)
73.2	MIRRORS, POWER, REARVIEW, LEFT & RIGHT SIDES
77	STEERING, POWER
91	RADIO, AM/FM
115	TILT STEERING WHEEL
128	TRANSMISSION, AUTOMATIC
144	INTERMITTENT WIPERS
200	WHEEL COVERS; STANDARD, SET OF FOUR
208	REAR WINDOW DEFROSTER
209	POWER DOOR LOCKS/POWER WINDOWS
211	CLOTH SEATS
236	BODY SIDE MOLDING
241	ANTI-LOCK BRAKE SYSTEM (OEM STANDARD)

OPTIONAL EQUIPMENT:

OPT. NO.	DESCRIPTION
107	SPARE WHEEL AND TIRE, FULL SIZE CONVENTIONAL TYPE (**NOT AVAILABLE, FMD WILL PURCHASE FROM CITY CONTRACT)** (SAP NO. 10047496)
140.2	AUTOMOTIVE WINDOW TINT, DARK (SAP NO. 10047497)
204	SINGLE KEY LOCKING (SAP NO. 10013081)
224.11	LIGHT, LED HIDE-A-WAY RED (SAP NO. 10047498)
238	FLOOR MATS (SAP NO. 10013078)

ITEM NO.	DESCRIPTION
4	SERIES 361E-HEV HYBRID GASOLINE/ELECTRIC 4 CYLINDER INTERMEDIATE 4-DOOR SEDAN, MUST MEET OR EXCEED THE FEDERAL LEV CERTIFICATION AND INCLUDE THE FOLLOWING STANDARD EQUIPMENT (SAP NO. 10030916)

MANUFACTURER	**CHEVROLET**	**FORD**	**TOYOTA**
MODEL	MALIBU	FUSION	CAMRY

SPECIFICATION	**MINIMUM REQUIREMENTS**
WHEEL BASE (INCHES)	107
LENGTH (INCHES)	188
WIDTH (INCHES)	70
ENGINE DISPLACEMENT (LITERS)	2.4L 4 CYLINDER
ENGINE HP	147
MILES PER GALLON (CITY/HIGHWAY)	26/34

STANDARD EQUIP. NO	DESCRIPTION
1	AIR CONDITIONING (INCLUDES OPT. 87)
37.1	COLORS, SOLID, (O.E.M. STANDARD)
73.2	MIRRORS, POWER, REARVIEW, LEFT & RIGHT SIDES
77	STEERING, POWER
91	RADIO, AM/FM
115	TILT STEERING WHEEL
128	TRANSMISSION, AUTOMATIC
144	INTERMITTENT WIPERS
200	WHEEL COVERS; STANDARD, SET OF FOUR
208	REAR WINDOW DEFROSTER
209	POWER DOOR LOCKS/POWER WINDOWS
211	CLOTH SEATS
236	BODY SIDE MOLDING
241	ANTI-LOCK BRAKE SYSTEM (OEM STANDARD)

OPTIONAL EQUIPMENT:

OPT. NO.	DESCRIPTION
204	SINGLE KEY LOCKING (SAP NO. 10034347)
238	FLOOR MATS (SAP NO. 10034348)

ITEM NO.	DESCRIPTION

5 SERIES 372B-LEV GASOLINE 6-CYLINDER FULL SIZE 4-DOOR SEDAN, **FRONT WHEEL DRIVE**, MUST MEET OR EXCEED THE FEDERAL LEV CERTIFICATION AND INCLUDE THE FOLLOWING STANDARD EQUIPMENT
(SAP NO. 10013073)

MANUFACTURER	**CHEVROLET**	**FORD**
MODEL	IMPALA	TAURUS

SPECIFICATION	**MINIMUM REQUIREMENTS**
WHEEL BASE (INCHES)	110
LENGTH (INCHES)	200
WIDTH (INCHES)	72
ENGINE DISPLACEMENT (LITERS)	3.5L-V6
ENGINE HORSEPOWER	210
ENGINE TORQUE	216

STANDARD EQUIP. NO	DESCRIPTION
1	AIR CONDITIONING (INCLUDES OPT. 87)
37.1	COLORS, SOLID, (O.E.M. STANDARD)
73.2	MIRRORS, POWER, REARVIEW, LEFT & RIGHT SIDES
77	STEERING, POWER
91	RADIO, AM/FM
115	TILT STEERING WHEEL
116	CRUISE CONTROL
128	TRANSMISSION, AUTOMATIC
144	INTERMITTENT WIPERS
200	WHEEL COVERS; STANDARD, SET OF FOUR
205	CLOTH UPHOLSTERY
208	REAR WINDOW DEFROSTER
209	POWER DOOR LOCKS/POWER WINDOWS
236	BODY SIDE MOLDING
241	ANTI-LOCK BRAKE SYSTEM (OEM STANDARD)

OPTIONAL EQUIPMENT:

OPT. NO.	DESCRIPTION
204	SINGLE KEY LOCKING (SAP NO. 10013076)
238	FLOOR MATS (SAP NO. 10023963)

ITEM NO.	DESCRIPTION

6 SERIES 373B-LEV GASOLINE 6-CYLINDER FULL SIZE, UNI-BODY 4-DOOR SEDAN, **REAR WHEEL DRIVE**, MUST MEET OR EXCEED THE FEDERAL LEV CERTIFICATION AND INCLUDE THE FOLLOWING STANDARD EQUIPMENT
(SAP NO. 10025014)

MANUFACTURER	**DODGE**
MODEL	CHARGER

SPECIFICATION	**MINIMUM REQUIREMENTS**
WHEEL BASE (INCHES)	120
LENGTH (INCHES)	199
WIDTH (INCHES)	74
ENGINE DISPLACEMENT (LITERS)	3.6L-V6
ENGINE NET HP	290
TORQUE	260

STANDARD EQUIP. NO	DESCRIPTION
1	AIR CONDITIONING
37.1	COLORS, SOLID (OEM STANDARD)
73.2	MIRRORS, POWER, REARVIEW, LEFT & RIGHT SIDES
77	STEERING, POWER
91	RADIO, AM/FM
115	STEERING WHEEL, TILT
128	AUTOMATIC TRANSMISSION
144	WIPERS, INTERMITTENT
200	WHEEL COVERS, OEM STANDARD
205	CLOTH UPHOLSTERY
208	REAR WINDOW DEFROSTER
209	POWER DOOR LOCKS/POWER WINDOWS
236	BODY SIDE MOLDING
241	ANTI-LOCK BRAKE SYSTEM (OEM STANDARD)

OPTIONAL EQUIPMENT:

OPT. NO.	DESCRIPTION
111A	SPOTLIGHT, CHROME (SAP NO. 10036051)
140.1	DARK WINDOW TINT (SAP NO. 10025015)
224.7	LIGHTBAR AND SIREN (SAP NO. 10036052)
249	ENGINE HOUR METER (SAP NO. 10030182)

ITEM NO.	DESCRIPTION
7	SERIES 374C-LEV GASOLINE 8-CYLINDER FULL SIZE 4-DOOR SEDAN, **REAR WHEEL DRIVE**, MUST MEET OR EXCEED THE FEDERAL LEV CERTIFICATION AND INCLUDE THE FOLLOWING STANDARD EQUIPMENT. (SAP NO. 10023160)

MANUFACTURER	**DODGE**
MODEL	CHARGER

SPECIFICATION	**MINIMUM REQUIREMENTS**
WHEEL BASE (INCHES)	120
LENGTH (INCHES)	199
WIDTH (INCHES)	75
ENGINE DISPLACEMENT (LITERS)	5.7L-V8
ENGINE HP	300
TORQUE	350

STANDARD EQUIP. NO	DESCRIPTION
1	AIR CONDITIONER (INCLUDES OPT. 87)
37.1	COLORS, SOLID (O.E.M. STANDARD)
73.2	MIRRORS, POWER, REARVIEW, LEFT & RIGHT SIDES
77	STEERING, POWER
91	RADIO, AM/FM
107	FULL SIZE SPARE TIRE AND WHEEL
115	TILT STEERING WHEEL
128	TRANSMISSION, AUTOMATIC
144	WIPERS, INTERMITTENT
200	WHEEL COVERS, O.E.M. STANDARD
205	CLOTH UPHOLSTERY
208	REAR WINDOW DEFROSTER
209	POWER DOOR LOCKS/POWER WINDOWS
236	BODY SIDE MOLDING
241	ANTI-LOCK BRAKING SYSTEM (OEM STANDARD)

OPTIONAL EQUIPMENT:

OPT. NO.	DESCRIPTION
50	TRIM LEVEL UPGRADE TO LX TRIM (SAP NO. 10023964)
136.1	MANUFACTURER'S EXTENDED WARRANTY (SAP NO. 10023965)
140.2	DARK WINDOW TINT FOR POLICE DEPARTMENT (SAP NO.10023966)
204	SINGLE KEY LOCKING (SAP NO. 10023967)
238	FLOOR MATS (SAP NO. 10023968)

ITEM NO.	DESCRIPTION

8 SERIES 650C-LEV GASOLINE 8-CYLINDER 1/2-TON CARRYALL 4-DOOR UTILITY VEHICLE, 2-WHEEL DRIVE, MUST MEET OR EXCEED THE FEDERAL LEV CERTIFICATION AND INCLUDE THE FOLLOWING STANDARD EQUIPMENT.
(SAP NO. 10044097)

MANUFACTURER	**CHEVROLET**	**FORD**
MODEL	SUBURBAN CC10906	EXPEDITION EL

SPECIFICATION	**MINIMUM REQUIREMENTS**
WHEEL BASE (INCHES)	130
OVERALL LENGTH (INCHES)	221
APPROX. PAYLOAD (POUNDS)	1560
SEATING CAPACITY	5
GVWR (POUNDS)	7,200
ENGINE DISPLACEMENT (LITERS)	5.3-V8
ENGINE HP	310
ENGINE TORQUE	335
TIRE SIZE	MFG. STANDARD

STANDARD EQUIP. NO	DESCRIPTION
2	AIR CONDITIONER, FRONT & REAR
16	ALTERNATOR, MANUFACTURER'S 130 AMP MINIMUM
37.1	COLORS, SOLID (O.E.M. STANDARD)
73.2	MIRRORS, POWER, REARVIEW, LEFT & RIGHT SIDES
77	STEERING, POWER
91	RADIO AM/FM
107.1	FULL SIZE SPARE TIRE AND WHEEL, LOCKABLE
115	TILT STEERING
116	CRUISE CONTROL
128	TRANSMISSION, AUTOMATIC
132.1	OIL COOLER, AUXILIARY TRANSMISSION
144	WIPERS, INTERMITTENT
200	WHEEL COVERS, (O.E.M. STANDARD)
241	ANTI-LOCK BRAKE SYSTEM (OEM STANDARD)

OPTIONAL EQUIPMENT:

OPT. NO.	DESCRIPTION

210.8 VEHICLE UPGRADE FOR FORD EXPEDITION EL 2WD LIMITED MODEL, FORD ORDER CODE K1K, WHICH INCLUDES ALL LIMITED MODEL VEHICLE STANDARD EQUIPMENT AND FEATURES. ALSO INCLUDES THE FOLLOWING ADDITIONAL EQUIPMENT: 301A EQUIPMENT GROUP, 58F NAVIGATION SYSTEM WITH H/D RADIO, 64P 20” POLISHED ALUMINUM WHEELS, 65R POWER CODE REMOTE START SYSTEM, ECCO BACKUP ALARM, AND MOUNTED FRONT BUMPER PARKING ASSIST SYSTEM. BLACK EXTERIOR COLOR AND CHARCOAL BLACK INTERIOR COLOR. (SAP NO. 10044098)

210.9 VEHICLE UPGRADE FOR CHEVROLET SUBURBAN 2WD 1500 LTZ, CHEVROLET ORDER CODE COCC10906, WHICH INCLUDES ALL 1500 LTZ MODEL VEHICLE STANDARD EQUIPMENT AND FEATURES. ALSO INCLUDES THE FOLLOWING ADDITIONAL EQUIPMENT: PCJ EQUIPMENT GROUP, UFT SIDE BLIND ZONE ALERT AND VLI REAR CARGO MAT. BLACK GRANITE METALLIC EXTERIOR COLOR AND EBONY INTERIOR COLOR. (SAP NO. 10044099)

ITEM NO.	DESCRIPTION
9	SERIES 655C-LEV GASOLINE 8-CYLINDER 3/4 TON CARRYALL 4-DOOR UTILITY VEHICLE, 2-WHEEL DRIVE, MUST MEET OR EXCEED THE FEDERAL LEV CERTIFICATION AND INCLUDE THE FOLLOWING STANDARD EQUIPMENT. (SAP NO. 10013089)

MANUFACTURER	**CHEVROLET**
MODEL	SUBURBAN 20906 FLEET PACKAGE

SPECIFICATION	**MINIMUM REQUIREMENTS**
WHEEL BASE (INCHES)	130
OVERALL LENGTH (INCHES)	222
APPROX. PAYLOAD (POUNDS)	2429
SEATING CAPACITY	5
GVWR (POUNDS)	8,600
ENGINE DISPLACEMENT (LITERS)	6.0L-V8
ENGINE HP	352
ENGINE TORQUE	382
TIRE SIZE	MFG. STANDARD

STANDARD EQUIP. NO	DESCRIPTION
2	AIR CONDITIONER, FRONT & REAR
16	ALTERNATOR, MANUFACTURER'S 130 AMP MINIMUM
37.1	COLORS, SOLID (O.E.M. STANDARD)
73.2	MIRRORS, POWER, REARVIEW, LEFT & RIGHT SIDES
77	STEERING, POWER
91	RADIO AM/FM
107.1	FULL SIZE SPARE TIRE AND WHEEL, LOCKABLE
115	TILT STEERING
116	CRUISE CONTROL
128	TRANSMISSION, AUTOMATIC
132.1	OIL COOLER, AUXILIARY TRANSMISSION
144	WIPERS, INTERMITTENT
200	WHEEL COVERS, (O.E.M. STANDARD)
241	ANTI-LOCK BRAKE SYSTEM (OEM STANDARD)

OPTIONAL EQUIPMENT:

OPT. NO.	DESCRIPTION
37.4	COLOR: YELLOW FED STD 595B NO. 13507 (QTY: 1-4) (SAP NO. 10023969)
37.5	COLOR: YELLOW FED STD 595B NO. 13507 (QTY: 5 OR MORE) (SAP NO. 10023970)
45	LIMITED SLIP DIFFERENTIAL (SAP NO. 10013093)
52	FOUR WHEEL DRIVE (SAP NO. 10013091)

SERIES 655C-LEV (CONTINUED)

OPTIONAL EQUIPMENT:

OPT. NO.	DESCRIPTION
99	REAR SEAT, THIRD ROW (SAP NO. 10013141)
111A	SPOTLIGHT, LEFT SIDE (SAP NO. 10013098)
111.1	SPOTLIGHTS, DUAL, LEFT AND RIGHT SIDES (SAP NO. 10023971)
140.1	AUTOMOTIVE WINDOW TINT, DARK (SAP NO. 10047578)
204	SINGLE KEY LOCKING (SAP NO. 10013096)
209	POWER DOOR LOCKS & WINDOWS (SAP NO. 10013094)
210	SPECIAL SEATING REQUIREMENT (SAP NO. 10013097)
211	CLOTH SEATS (SAP NO. 10013090)
213.1	FACTORY INSTALLED TRAILER TOWING PACKAGE WITH RECEIVER HITCH (SAP NO. 10013099)
215	CARPET: FRONT AND REAR (SAP NO. 10023973)
224.4	STROBE LIGHT, MOUNTED ON ROOF, LOW PROFILE (SAP NO. 10023974)
224.5	ROOF-MOUNTED SPOTLIGHT (SAP NO. 10023975)
224.6	DUAL, ROOF-MOUNTED SPOTLIGHTS (SAP NO. 10023976)
224.7	LIGHTBAR AND SIREN PACKAGE (SAP NO. 10013092)
224.8	LIGHT BAR, MINIFREEDOM, WHELEN MODEL FT8AAAAP (SAP NO. 10013146)

SERIES 655C-LEV (CONTINUED)

OPTIONAL EQUIPMENT:

OPT. NO.	DESCRIPTION
224.9	LIGHT PACKAGE FOR FIRE DEPT.,FS-CHVHFD (SAP NO. 10023977)
225.1	LIGHT PACKAGE FOR POLICE DEPARTMENT FS-COHPD 10422 (SAP NO. 10043871)
249	METER, HOUR (SAP NO. 10030648)
250.1	ADDITIONAL BATTERY (SAP NO. 10023978)
268	TRUCK BED EXTENDER FOR 3/4-TON SUBURBAN UTILITY VEHICLE (SAP NO. 10047529)

ITEM NO.	DESCRIPTION
10	SERIES 656B-LEV MEDIUM-DUTY 4-DOOR UTILITY VEHICLE, 2-WHEEL DRIVE, FRONT WHEEL OR REAR WHEEL DRIVE, 6-CYLINDER GASOLINE, MUST MEET OR EXCEED THE FEDERAL LEV CERTIFICATION AND INCLUDE THE FOLLOWING STANDARD EQUIPMENT (SAP NO. 10013111)

MANUFACTURER	**FORD**	**DODGE**
MODEL	EXPLORER	DURANGO

SPECIFICATION	**MINIMUM REQUIREMENTS**
WHEEL BASE (INCHES)	112
OVERALL LENGTH (INCHES)	197
MAXIMUM CARGO (CUBIC FLEET)	80
GVWR (POUNDS)	6120
ENGINE DISPLACEMENT (LITERS)	3.5L 6 CYLINDER
ENGINE HORSEPOWER	290
ENGINE TORQUE	255
TIRE SIZE	MFG. STANDARD

STANDARD EQUIP. NO	DESCRIPTION
1	AIR CONDITIONER (INCLUDES OPT. 87)
37.1	COLORS, SOLID (O.E.M. STANDARD)
73.2	MIRRORS, POWER, REARVIEW, LEFT & RIGHT SIDES
77	STEERING, POWER
91	RADIO, AM/FM
107.1	FULL SIZE SPARE TIRE AND WHEEL, LOCKABLE
115	TILT STEERING
116	CRUISE CONTROL
128	TRANSMISSION, AUTOMATIC
144	WIPERS, INTERMITTENT
238	FLOOR MATS, CARPETED, FRONT AND REAR
241	ANTILOCK BRAKING SYSTEM (OEM STANDARD)

OPTIONAL EQUIPMENT:

OPT. NO.	DESCRIPTION
37.4	COLOR: YELLOW FED STD 595B NO. 13507 (QTY: 1-4) IF PAINT IS NON STANDARD THE POTENTIAL VENDOR WILL NEED TO INCLUDE THE YELLOW PAINT COLOR, EVEN IF THIS AN AFTER MARKET PAINT COLOR (SAP NO. 10023979)
37.5	COLOR: YELLOW FED STD 595B NO. 13507 (QTY: 5 OR MORE) IF PAINT IS NON STANDARD THE POTENTIAL VENDOR WILL NEED TO INCLUDE THE YELLOW PAINT COLOR, EVEN IF THIS AN AFTER MARKET PAINT COLOR (SAP NO. 10023980)
111A	SPOTLIGHT, LEFT SIDE (SAP NO. 10013117)

SERIES 656B-LEV (CONTINUED)

OPTIONAL EQUIPMENT:

OPT. NO.	DESCRIPTION
204	SINGLE KEY LOCKING (SAP NO. 10013116)
208	REAR WINDOW DEFROSTER (SAP NO. 10013115)
209	POWER DOOR LOCKS & WINDOWS (SAP NO. 10023982)
211	CLOTH SEATS (SAP NO. 10013112)
213.1	FACTORY INSTALLED TRAILER TOWING PACKAGE WITH RECEIVER HITCH (SAP NO. 10013113)
224.4	STROBE LIGHT, MOUNTED ON ROOF, LOW (SAP NO. 10023983)
224.5	ROOF-MOUNTED SPOTLIGHT (SAP NO. 10023984)
224.6	DUAL, ROOF-MOUNTED SPOTLIGHTS (SAP NO. 10023985)
224.7	LIGHTBAR AND SIREN PACKAGE (SAP NO. 10013114)
224.8	LIGHT BAR, MINIFREEDOM, WHELEN MODEL FT8AAAAP (SAP NO. 10023986)
242	ROLLING DECK ROLLOUT OR EQUAL (SAP NO. 10023987)
246	RUNNING BOARDS (SAP NO. 10033103)
249	HOUR METER (SAP NO. 10030656)

ITEM NO.	DESCRIPTION

11 SERIES 657B-LEV MEDIUM-DUTY 4-DOOR UTILITY VEHICLE, **ALL WHEEL DRIVE** OR **4-WHEEL DRIVE**, 6-CYLINDER GASOLINE, MUST MEET OR EXCEED THE FEDERAL LEV CERTIFICATION AND INCLUDE THE FOLLOWING STANDARD EQUIPMENT
(SAP NO. 10013118)

MANUFACTURER	**FORD**	**DODGE**
MODEL	EXPLORER	DURANGO

SPECIFICATION	**MINIMUM REQUIREMENTS**
WHEEL BASE (INCHES)	112
OVERALL LENGTH (INCHES)	197
MAXIMUM CARGO (CUBIC FLEET)	80
GVWR (POUNDS)	6120
ENGINE DISPLACEMENT (LITERS)	3.5L 6 Cylinder
ENGINE HORSEPOWER	290
ENGINE TORQUE	255
TIRE SIZE	MFG. STANDARD

STANDARD EQUIP. NO	DESCRIPTION
1	AIR CONDITIONER (INCLUDES OPT. 87)
37.1	COLORS, SOLID (O.E.M. STANDARD)
73.2	MIRRORS, POWER, REARVIEW, LEFT & RIGHT SIDES
77	STEERING, POWER
91	RADIO, AM/FM
107.1	FULL SIZE SPARE WHEEL AND TIRE, LOCKABLE
115	TILT STEERING
116	CRUISE CONTROL
128	TRANSMISSION, AUTOMATIC
144	WIPERS, INTERMITTENT
238	FLOOR MATS, CARPETED, FRONT AND REAR
241	ANTILOCK BRAKING SYSTEM (OEM STANDARD)

OPTIONAL EQUIPMENT:

OPT. NO.	DESCRIPTION

37.4 COLOR: YELLOW FED STD 595B NO. 13507
(QTY: 1-4) IF PAINT IS NON STANDARD THE POTENTIAL VENDOR WILL NEED TO INCLUDE THE YELLOW PAINT COLOR, EVEN IF THIS AN AFTER MARKET PAINT COLOR
(SAP NO. 10023988)

37.5 COLOR: YELLOW FED STD 595B NO. 13507
(QTY: 5 OR MORE) IF PAINT IS NON STANDARD THE POTENTIAL VENDOR WILL NEED TO INCLUDE THE YELLOW PAINT COLOR, EVEN IF THIS AN AFTER MARKET PAINT COLOR
(SAP NO. 10023989)

111A SPOTLIGHT, LEFT SIDE
(SAP NO. 10013125)

SERIES 657B-LEV (CONTINUED)

OPTIONAL EQUIPMENT:

OPT. NO.	DESCRIPTION
204	SINGLE KEY LOCKING (SAP NO. 10013124)
208	REAR WINDOW DEFROSTER (SAP NO. 10013123)
209	POWER DOOR LOCKS & WINDOWS (SAP NO. 10013122)
211	CLOTH SEATS (SAP NO. 10013119)
213.1	FACTORY INSTALLED TRAILER TOWING PACKAGE WITH RECEIVER HITCH (SAP NO. 10013120)
224.4	STROBE LIGHT, MOUNTED ON ROOF, LOW PROFILE (SAP NO. 10023991)
224.5	ROOF-MOUNTED SPOTLIGHT (SAP NO. 10023984)
224.6	DUAL, ROOF-MOUNTED SPOTLIGHTS (SAP NO. 10023992)
224.7	LIGHTBAR AND SIREN PACKAGE (SAP NO. 10013121)
224.8	LIGHT BAR, MINIFREEDOM, WHELEN MODEL FT8AAAAP (SAP NO. 10023993)
246	RUNNING BOARDS (SAP NO. 10033095)
242	ROLLING DECK ROLLOUT OR EQUAL (SAP NO. 10023994)

ITEM NO.	DESCRIPTION

12 SERIES 661B-LEV LIGHT DUTY 4-DOOR UTILITY VEHICLE, **ALL WHEEL DRIVE OR 4-WHEEL DRIVE**, **4-CYLINDER** GASOLINE, MUST MEET OR EXCEED THE FEDERAL LEV CERTIFICATION AND INCLUDE THE FOLLOWING STANDARD EQUIPMENT.
(SAP NO. 10013101)

MANUFACTURER	**JEEP**	**FORD**	**TOYOTA**	**CHEVROLET**
MODEL	PATRIOT 4X4	ESCAPE AWD	RAV4 4X4	EQUINOX AWD

SPECIFICATION	**MINIMUM REQUIREMENTS**
WHEEL BASE (INCHES)	103
OVERALL LENGTH (INCHES)	173
MAX CARGO (CUBIC FEET)	54
GVWR (POUNDS)	4400
ENGINE DISPLACEMENT (LITERS)	1.6L - 4-CYLINDER
ENGINE HORSEPOWER	168
ENGINE TORQUE	165
TIRE SIZE	MFG. STANDARD

STANDARD EQUIP. NO	DESCRIPTION
1	AIR CONDITIONER (INCLUDES OPT. 87)
37.1	COLORS, SOLID (O.E.M. STANDARD)
73.2	MIRRORS, POWER, REARVIEW, LEFT & RIGHT SIDES
77	STEERING, POWER
91	RADIO, AM/FM
128	TRANSMISSION, AUTOMATIC
144	WIPERS, INTERMITTENT
241	ANTILOCK BRAKING SYSTEM (OEM STANDARD)

OPTIONAL EQUIPMENT:

OPT. NO.	DESCRIPTION
37.4	COLOR: YELLOW FED STD 595B NO. 13507 (QTY: 1-4) (SAP NO. 10024003)
37.5	COLOR: YELLOW FED STD 595B NO. 13507 (QTY: 5 OR MORE) (SAP NO. 10024004)
111A	SPOTLIGHT, LEFT SIDE (SAP NO. 10013102)

SERIES 661B-LEV (CONTINUED)

OPTIONAL EQUIPMENT:

OPT. NO.	DESCRIPTION
204	SINGLE KEY LOCKING (SAP NO. 10024006)
208	REAR WINDOW DEFROSTER (SAP NO. 10013103)
209	POWER DOOR LOCKS & WINDOWS (SAP NO. 10024007)
211	CLOTH SEATS (SAP NO. 10013104)
213.1	FACTORY INSTALLED TRAILER TOWING PACKAGE WITH RECEIVER HITCH (SAP NO. 10024008)
224.4	STROBE LIGHT, MOUNTED ON ROOF, LOW PROFILE (SAP NO. 10024009)
224.5	ROOF-MOUNTED SPOTLIGHT (SAP NO. 10024010)
224.6	DUAL, ROOF-MOUNTED SPOTLIGHTS (SAP NO. 10024020)
224.7	LIGHTBAR AND SIREN PACKAGE (SAP NO. 10024021)
224.8	LIGHT BAR, MINIFREEDOM, WHELEN MODEL FT8AAAAP (SAP NO. 10024022)
242	ROLLING DECK ROLLOUT OR EQUAL (SAP NO. 10024023)

ITEM NO.	DESCRIPTION

13 SERIES 663B-LEV LIGHT DUTY 4-DOOR UTILITY VEHICLE, **2-WHEEL DRIVE, 4-CYLINDER** GASOLINE, MUST MEET OR EXCEED THE FEDERAL LEV CERTIFICATION AND INCLUDE THE FOLLOWING STANDARD EQUIPMENT. **VEHICLES MUST BE FWD.**
(SAP NO. 10013106)

MANUFACTURER	**JEEP**	**FORD**	**TOYOTA**	**CHEVROLET**
MODEL	PATRIOT	ESCAPE	RAV4	EQUINOX

SPECIFICATION	**MINIMUM REQUIREMENTS**
WHEEL BASE (INCHES)	103
OVERALL LENGTH (INCHES)	173
MAX CARGO (CUBIC FEET)	54
GVWR (POUNDS)	4400
ENGINE DISPLACEMENT (LITERS)	1.6L - 4-CYLINDER
ENGINE HORSEPOWER	168
ENGINE TORQUE	165
TIRE SIZE	MFG. STANDARD

STANDARD EQUIP. NO	DESCRIPTION
1	AIR CONDITIONER (INCLUDES OPT. 87)
37.1	COLORS, SOLID (O.E.M. STANDARD)
73.2	MIRRORS, POWER, REARVIEW, LEFT & RIGHT SIDES
77	STEERING, POWER
91	RADIO, AM/FM
128	TRANSMISSION, AUTOMATIC
144	WIPERS, INTERMITTENT
241	ANTILOCK BRAKING SYSTEM (OEM STANDARD)

OPTIONAL EQUIPMENT:

OPT. NO.	DESCRIPTION

37.4 COLOR: YELLOW FED STD 595B NO. 13507
(QTY: 1-4)
(SAP NO. 10024024)

37.5 COLOR: YELLOW FED STD 595B NO. 13507
(QTY: 5 OR MORE)
(SAP NO. 10024025)

45 LIMITED SLIP DIFFERENTIAL OPTIONAL (NOT A REQUIREMENT)
(SAP NO. 10024026)

SERIES 663B-LEV (CONTINUED)

OPTIONAL EQUIPMENT:

OPT. NO.	DESCRIPTION
111A	SPOTLIGHT, LEFT SIDE (SAP NO. 10024027)
204	SINGLE KEY LOCKING (SAP NO. 10024029)
208	REAR WINDOW DEFROSTER (SAP NO. 10013107)
209	POWER DOOR LOCKS & WINDOWS (SAP NO. 10013108)
211	CLOTH SEATS (SAP NO. 10013109)
213.1	FACTORY INSTALLED TRAILER TOWING PACKAGE WITH RECEIVER HITCH (SAP NO. 10024040)
224.4	STROBE LIGHT, MOUNTED ON ROOF, LOW PROFILE (SAP NO. 10024041)
224.5	ROOF-MOUNTED SPOTLIGHT (SAP NO. 10024042)
224.6	DUAL, ROOF-MOUNTED SPOTLIGHTS (SAP NO. 10024043)
224.7	LIGHTBAR AND SIREN PACKAGE (SAP NO. 10024044)
224.8	LIGHT BAR, MINIFREEDOM, WHELEN MODEL FT8AAAAP (SAP NO. 10024045)
238	FLOOR MATS (SAP NO. 10024046)

ITEM NO.	DESCRIPTION
14	SERIES 664E-HEV HEAVY DUTY HYBRID-ELECTRIC UTILITY VEHICLE, 4-DOOR, 2-WHEEL DRIVE, MUST MEET OR EXCEED THE FEDERAL LEV CERTIFICATION AND INCLUDE THE FOLLOWING STANDARD EQUIPMENT. SAP NO. 10048101

MANUFACTURER	**CHEVROLET**
MODEL	TAHOE

SPECIFICATION	**MINIMUM REQUIREMENTS**
WHEEL BASE (INCHES)	116
OVERALL LENGTH (INCHES)	202
WIDTH	79
HEIGHT	74
APPROX. PAYLOAD (POUNDS)	1,700
GVWR (POUNDS)	7,100
ENGINE DISPLACEMENT (LITERS)	6.0L - V8
ENGINE HORSEPOWER	332
ENGINE TORQUE	367
TIRE SIZE	MFG. STANDARD

STANDARD EQUIP. NO	DESCRIPTION
1	AIR CONDITIONER (INCLUDES OPT. 87)
16	130 AMP ALTERNATOR
29.1	BUMPER, OEM STANDARD
37.1	COLORS, SOLID (O.E.M. STANDARD)
73.2	MIRRORS, POWER, REARVIEW, LEFT & RIGHT SIDES
77	STEERING, POWER
91	RADIO, AM/FM
107.1	FULL SIZE SPARE TIRE & WHEEL, LOCKING
128.2	CVT TRANSMISSION
144	WIPERS, INTERMITTENT
241	ANTILOCK BRAKING SYSTEM (OEM STANDARD)

OPTIONAL EQUIPMENT:

OPT. NO.	DESCRIPTION
2.1	AIR CONDITIONER UNIT, REAR FACTORY INSTALLED
132.1	AUTOMATIC TRANSMISSION OIL COOLER
204	SINGLE KEY LOCKING
208	REAR WINDOW DEFROSTER
209	POWER DOOR LOCKS & WINDOWS
211	CLOTH SEATS

ITEM NO.	DESCRIPTION

15 SERIES 665C-LEV HEAVY DUTY UTILITY VEHICLE, 4-DOOR, 2-WHEEL DRIVE, 8-CYLINDER GASOLINE, MUST MEET OR EXCEED THE FEDERAL LEV CERTIFICATION AND INCLUDE THE FOLLOWING STANDARD EQUIPMENT.
(SAP NO. 10013126)

MANUFACTURER	**FORD**	**CHEVROLET**
MODEL	EXPEDITION	TAHOE

SPECIFICATION	**MINIMUM REQUIREMENTS**
WHEEL BASE (INCHES)	116
OVERALL LENGTH	202
APPROX. PAYLOAD (POUNDS)	1,630
GVWR (POUNDS)	7,100
SEATING CAPACITY	5
ENGINE DISPLACEMENT (LITERS)	5.3L - V8
ENGINE HORSEPOWER	310
ENGINE TORQUE	335
TIRE SIZE	MFG. STANDARD

STANDARD EQUIP. NO	DESCRIPTION
1	AIR CONDITIONER
16	130 AMP ALTERNATOR
29.1	BUMPER, OEM STANDARD
37.1	COLORS, SOLID (O.E.M. STANDARD)
73.2	MIRRORS, POWER, REARVIEW, LEFT & RIGHT SIDES
77	STEERING, POWER
91	RADIO, AM/FM
107.1	FULL SIZE SPARE TIRE & WHEEL, LOCKING
128	TRANSMISSION, AUTOMATIC
144	WIPERS, INTERMITTENT
241	ANTILOCK BRAKING SYSTEM (OEM STANDARD)

OPTIONAL EQUIPMENT:

OPT. NO.	DESCRIPTION
2.1	AIR CONDITIONER, REAR (SAP NO. 10013139)
37.4	COLOR: YELLOW FED STD 595B NO. 13507 (QTY: 1-4) (SAP NO. 10024047)
37.5	COLOR: YELLOW FED STD 595B NO. 13507 (QTY: 5 OR MORE) (SAP NO. 10024048)
45	LIMITED SLIP DIFFERENTIAL (SAP NO. 10013137)
49	LARGER DISPLACEMENT ENGINE (SAP NO. 10013130)

SERIES 665C-LEV (CONTINUED)

OPTIONAL EQUIPMENT:

OPT. NO.	DESCRIPTION
52	4-WHEEL DRIVE (SAP NO. 10013133)
99	REAR SEAT (SAP NO. 10013140)
111A	SPOTLIGHT, LEFT SIDE (SAP NO. 10022751)
111.1	DUAL SPOTLIGHTS, LEFT & RIGHT SIDES (SAP NO. 10013129)
132.1	TRANSMISSION OIL COOLER (SAP NO. 10013145)
204	SINGLE KEY LOCKING (SAP NO. 10013143)
208	REAR WINDOW DEFROSTER (SAP NO. 10013095)
209	POWER DOOR LOCKS & WINDOWS (SAP NO. 10013138)
210	SPECIAL SEATING (SAP NO. 10013144)
210.5	FORD XLT / CHEVROLET LS TRIM LEVEL UPGRADE (SAP NO. 10039286)
211	CLOTH SEATS (SAP NO. 10013127)
213.1	2-WD FACTORY INSTALLED TRAILER TOWING PACKAGE WITH RECEIVER HITCH (SAP NO. 10013132)
213.3	4-WD FACTORY INSTALLED TRAILER TOWING PACKAGE WITH RECEIVER HITCH (SAP NO. 10013131)
224.4	STROBE LIGHT, MOUNTED ON ROOF, LOW PROFILE (SAP NO. 10024050)
224.5	ROOF-MOUNTED SPOTLIGHT (SAP NO. 10024051)
224.6	DUAL, ROOF-MOUNTED SPOTLIGHTS (SAP NO. 10024052)

SERIES 665C-LEV (CONTINUED)

OPTIONAL EQUIPMENT:

OPT. NO.	DESCRIPTION
224.7	LIGHTBAR AND SIREN PACKAGE (SAP NO. 10024053)
224.8	LIGHTBAR MINIFREEDOM WHELEN MODEL FT8AAAAP (SAP NO. 10013136)
224.9	LIGHT PACKAGE FOR FIRE DEPT., FS-CHVHFD (SAP NO. 10036903)
224.10	LIGHT, LED HIDE-A-WAY CLEAR (SAP NO. 10030530)
224.11	LIGHT, LED HIDE-A-WAY RED (SAP NO. 10039741)
238	FLOOR MATS (SAP NO. 10030562)
246	RUNNING BOARDS (SAP NO. 10033079)
249	HOUR METER (SAP NO. 10030185)

DELETED FROM BID PER FLEET MANAGEMENT DEPARTMENT

ITEM NO.	DESCRIPTION
16	SERIES 668B-LEV SMALL CARGO VAN, EXTENDED, FRONT WHEEL DRIVE, 6-CYLINDER GASOLINE, MUST MEET OR EXCEED THE FEDERAL LEV CERTIFICATION AND INCLUDE THE FOLLOWING STANDARD EQUIPMENT. (SAP NO. 10024054)

MANUFACTURER	**DODGE**	**TOYOTA**
MODEL	CARAVAN	SIENNA

SPECIFICATION	**REQUIREMENTS**
WHEEL BASE (INCHES)	119
OVERALL LENGTH (INCHES)	200
CARGO LENGTH (INCHES)	93
WIDTH	76
HEIGHT	67
GVWR (POUNDS)	5900
CARGO AREA	144 CU. FT.
ENGINE DISPLACEMENT (LITERS)	3.5-V6
ENGINE HP	266
TIRE SIZE	MFG STANDARD

STANDARD EQUIP. NO	DESCRIPTION
1	AIR CONDITIONING, FRONT (INCLUDES OPT. 87)
37.1	COLORS, SOLID (OEM STANDARD)
73.2	MIRRORS, POWER, REARVIEW, LEFT & RIGHT SIDES
77	STEERING, POWER
91	RADIO, AM/FM
97	SEAT, PASSENGER
128	TRANSMISSION, AUTOMATIC
144	WIPERS, INTERMITTENT
241	ANTILOCK BRAKING SYSTEM (OEM STANDARD)

OPTIONAL EQUIPMENT:

OPT. NO.	DESCRIPTION
151	GLASS IN ALL DOORS (SAP NO. 10024056)
209	POWER DOOR LOCKS AND POWER WINDOWS (SAP NO. 10024057)
224.8	LIGHTBAR, MINIFREEDOM, WHELEN MODEL FT8AAAAP (SAP NO. 10029143)
229	SLIDING SIDE DOOR (SAP NO. 10024058)

DELETED FROM BID PER FLEET MANAGEMENT DEPARTMENT

ITEM NO.	DESCRIPTION
17	SERIES 680C-LEV FULL SIZE CARGO VAN, 8-CYLINDER GASOLINE, MUST MEET OR EXCEED THE FEDERAL LEV CERTIFICATION AND INCLUDE THE FOLLOWING STANDARD EQUIPMENT. (SAP NO. 10013174)

MANUFACTURER	**FORD**	**CHEVROLET**
MODEL	E250	2500-CG23405 EXPRESS

SPECIFICATION	**MINIMUM REQUIREMENTS**
WHEEL BASE (INCHES)	135
OVERALL LENGTH (INCHES)	216
WIDTH	79
HEIGHT	81
GVWR (POUNDS)	8600
APPROX. PAYLOAD (POUNDS)	3200
CARGO VOLUME (CUBIC FEET)	237
ENGINE DISPLACEMENT (LITERS)	4..6-V6
ENGINE HP	260
TIRE SIZE	MFG. STANDARD

STANDARD EQUIP. NO	DESCRIPTION
1	AIR CONDITIONING, FRONT
37.1	COLORS, SOLID (OEM STANDARD)
71	MIRRORS, EXTERIOR, REARVIEW
77	STEERING, POWER
91	RADIO, AM/FM
97	SEAT, PASSENGER
107	FULL SIZE SPARE TIRE AND WHEEL
128	TRANSMISSION, AUTOMATIC
132.1	OIL COOLER, AUTOMATIC TRANSMISSION - AUXILIARY
144	WIPERS, INTERMITTENT
241	ANTILOCK BRAKING SYSTEM (OEM STANDARD)

OPTIONAL EQUIPMENT:

OPT. NO.	DESCRIPTION
2.1	AIR CONDITIONING, REAR (SAP NO. 10024059)
37.4	COLOR: YELLOW FED STD 595B NO. 13507 (QTY 1-4) (SAP NO. 10024060)
37.5	COLOR, YELLOW FED STD 595B NO. 13507 (QTY: 5 OR MORE) (SAP NO. 10024061)

SERIES 680C-LEV (CONTINUED)

OPTIONAL EQUIPMENT:

OPT. NO.	DESCRIPTION
59.1	FUEL TANK (S), 30 GALLON CAPACITY (SAP NO. 10013169)
149	REAR DOOR GLASS (SAP NO. 10024063)
151	GLASS IN ALL DOORS (SAP NO. 10013170)
153	GLASS IN EACH DOOR AND SIDE PANELS (SAP NO. 10024064)
213.1	FACTORY INSTALLED TRAILER TOWING PACKAGE WITH RECEIVER HITCH (SAP NO. 10024360)
214.1	LIFT GATE 1,000 LB. CAPACITY (FORD/CHRYSLER) OR LIFT GATE 650 LB. CAPACITY (CHEVROLET) (SAP NO. 10024361)
214.2	LIGHT KIT FOR OPTION 214.1 (SAP NO. 10024065)
224.4	STROBE LIGHT, MOUNTED ON ROOF, LOW PROFILE (SAP NO. 10024066)
224.5	ROOF-MOUNTED SPOTLIGHT (SAP NO. 10024067)
224.6	DUAL, ROOF-MOUNTED SPOTLIGHTS (SAP NO. 10024068)
224.8	LIGHTBAR MINIFREEDOM WHELEN MODEL FT8AAAAP (SAP NO. 10013172)
229	SLIDING SIDE DOOR (SAP NO. 10013171)
229.1	HINGED SWING-OUT DOORS, SIDE (SAP NO. 10024069)
242	ROLLING DECK (SAP NO. 10024070)
248	BACKUP ALARM, ELECTRONIC (SAP NO. 10028791)
262	BULKHEAD PARTITION W/ HINGE KIT (SAP NO. 10028790)

DELETED FROM BID PER FLEET MANAGEMENT DEPARTMENT

ITEM NO.	DESCRIPTION
18	SERIES 685C-LEV FULL SIZE EXTENDED CARGO VAN, 8-CYLINDER GASOLINE, MUST MEET OR EXCEED THE FEDERAL LEV CERTIFICATION AND INCLUDE THE FOLLOWING STANDARD EQUIPMENT. (SAP NO. 10013175)

MANUFACTURER	**FORD**	**CHEVROLET**
MODEL	E250 SD EXT VAN	2500 CG23705 EXPRESS

SPECIFICATION	**MINIMUM REQUIREMENTS**
WHEEL BASE (INCHES)	135
OVERALL LENGTH (INCHES)	236
LENGTH CARGO (INCHES)	120
WIDTH	79
HEIGHT	82
GVWR (POUNDS)	8600
APPROX. PAYLOAD (POUNDS)	3000
ENGINE DISPLACEMENT (LITERS)	4.6L-V8
ENGINE HP	225
ENGINE TORQUE	286
TIRE SIZE	MFG. STANDARD

STANDARD EQUIP. NO	DESCRIPTION
1	AIR CONDITIONING, FRONT
37.1	COLORS, SOLID (OEM STANDARD)
71	MIRRORS, EXTERIOR, REARVIEW
77	STEERING, POWER
91	RADIO, AM/FM
97	SEAT, PASSENGER
107	FULL SIZE SPARE TIRE AND WHEEL
128	TRANSMISSION, AUTOMATIC
132.1	OIL COOLER, AUTOMATIC TRANSMISSION – AUXILIARY
144	WIPERS, INTERMITTENT
241	ANTILOCK BRAKING SYSTEM (OEM STANDARD)

OPTIONAL EQUIPMENT:

OPT. NO.	DESCRIPTION
2.1	AIR CONDITIONING, REAR (SAP NO. 10024071)
37.4	COLOR: YELLOW FED STD 595B NO. 13507 (QTY: 1-4) (SAP NO. 10024072)
37.5	COLOR: YELLOW FED STD 595B NO. 13507 (QTY: 5 OR MORE) (SAP NO. 10024073)

SERIES 685C-LEV (CONTINUED)

OPTIONAL EQUIPMENT:

OPT. NO.	DESCRIPTION
59.1	30 GAL FUEL TANK (SAP NO. 10013176)
149	REAR DOOR GLASS (SAP NO. 10024075)
151	GLASS IN ALL DOORS (SAP NO. 10024076)
153	GLASS IN EACH DOOR AND SIDE PANELS (SAP NO. 10013177)
213.1	FACTORY INSTALLED TRAILER TOWING PACKAGE WITH RECEIVER HITCH (SAP NO. 10024077)
214.1	LIFT GATE 1,000 LB. CAPACITY (FORD/CHRYSLER) OR LIFT GATE 650 LB. CAPACITY (CHEVROLET) (SAP NO. 10024078)
214.2	LIGHT KIT FOR OPTION 214.1 (SAP NO. 10024079)
224.4	STROBE LIGHT, MOUNTED ON ROOF, LOW PROFILE (SAP NO. 10024090)
224.5	ROOF-MOUNTED SPOTLIGHT (SAP NO. 10024091)
224.6	DUAL, ROOF-MOUNTED SPOTLIGHTS (SAP NO. 10024092)
224.8	LIGHTBAR MINIFREEDOM WHELEN MODEL FT8AAAAP (SAP NO. 10024093)
229	SLIDING SIDE DOOR (SAP NO. 10013179)
229.1	SWING-OUT DOORS, SIDE (SAP NO. 10024095)
242	ROLLING DECK (SAP NO. 10024096)
262	BULKHEAD W/SPECIAL SEATING (SAP NO. 10028790)

DELETED FROM BID PER FLEET MANAGEMENT DEPARTMENT

ITEM NO.	DESCRIPTION
19	SERIES 687C-LEV FULL SIZE EXTENDED CARGO VAN, 8-CYLINDER GASOLINE, MUST MEET OR EXCEED THE FEDERAL LEV CERTIFICATION AND INCLUDE THE FOLLOWING STANDARD EQUIPMENT. (SAP NO. 10013180)

MANUFACTURER	**CHEVROLET**	**FORD**
MODEL	3500 CG33705 EXT	E350 SD EXT

SPECIFICATION	**MINIMUM REQUIREMENTS**
WHEEL BASE (INCHES)	138
OVERALL LENGTH (INCHES)	236
LENGTH CARGO (INCHES)	140
WIDTH	79
HEIGHT	82
GVWR (POUNDS)	9,500
APPROX. PAYLOAD (POUNDS)	3900
ENGINE DISPLACEMENT (LITERS)	4.8L-V8
ENGINE HP	255
ENGINE TORQUE	295
TIRE SIZE	MFG. STANDARD

STANDARD EQUIP. NO	DESCRIPTION
1	AIR CONDITIONING, FRONT
37.1	COLORS, SOLID (OEM STANDARD)
71	MIRRORS, EXTERIOR, REARVIEW
77	STEERING, POWER
91	RADIO, AM/FM
97	SEAT, PASSENGER
107	FULL SIZE SPARE TIRE AND WHEEL
115	TILT STEERING WHEEL
128	TRANSMISSION, AUTOMATIC
132.1	OIL COOLER, TRANSMISSION
144	WIPERS, INTERMITTENT
241	ANTILOCK BRAKING SYSTEM (OEM STANDARD)

OPTIONAL EQUIPMENT:

OPT. NO.	DESCRIPTION
2.1	AIR CONDITIONING, REAR (SAP NO. 10024098)
37.4	COLOR: YELLOW FED STD 595B NO. 13507 (QTY: 1-4) (SAP NO. 10024099)
37.5	COLOR: YELLOW FED STD 595B NO. 13507 (QTY 5: OR MORE) (SAP NO. 10024011)

SERIES 687C-LEV (CONTINUED)

OPTIONAL EQUIPMENT:

OPT. NO.	DESCRIPTION
59.1	30 GAL FUEL TANK (SAP NO. 10013183)
111A	SPOTLIGHT, LEFT SIDE (SAP NO. 10024111)
116	CRUISE CONTROL (SAP NO. 10025603)
140.1	DARK WINDOW TINT (SAP NO. 10024112)
149	REAR DOOR GLASS (SAP NO. 10024113)
151	GLASS IN ALL DOORS (SAP NO. 10013184)
153	GLASS IN EACH DOOR AND SIDE PANELS (SAP NO. 10024114)
213.1	FACTORY INSTALLED TRAILER TOWING PACKAGE WITH RECEIVER HITCH (SAP NO. 10013182)
214.1	LIFT GATE 1,000 LB. CAPACITY (FORD/CHRYSLER) OR LIFT GATE 650 LB. CAPACITY (CHEVROLET/CHRYSLER) (SAP NO. 10013185)
214.2	LIGHT KIT FOR OPTION 214.1 (SAP NO. 10013186)
224.4	STROBE LIGHT, MOUNTED ON ROOF, LOW PROFILE (SAP NO. 10024115)
224.5	ROOF-MOUNTED SPOTLIGHT (SAP NO. 10013187)
224.6	DUAL, ROOF-MOUNTED SPOTLIGHTS (SAP NO. 10024117)

SERIES 687C-LEV (CONTINUED)

OPTIONAL EQUIPMENT:

OPT. NO.	DESCRIPTION
224.8	LIGHTBAR MINIFREEDOM WHELEN MODEL FT8AAAAP (SAP NO. 10024118)
224.15	LIGHT, LED WARNING. SPLIT RED/BLUE COLOR, INSTALLED PER DEPARTMENT INSTRUCTIONS (SAP NO. 10043841
224.17	LIGHT, LED WARNING. SPLIT RED/BLUE COLOR, DASH MOUNTED PER DEPARTMENT INSTRUCTIONS (SAP NO. 10043842)
229	SLIDING SIDE DOOR (SAP NO. 10013188)
229.1	SWING-OUT DOORS, SIDE (SAP NO. 10013189)
242	ROLLING DECK (SAP NO. 10024119)
248	BACKUP ALARM, ELECTRONIC (SAP NO. 10028792)
260	PRISONER TRANSPORT CONVERSION 2 COMPARTMENT (SAP NO. 10024120)
260.1	PRISONER TRANSPORT CONVERSION 3 COMPARTMENT (SAP NO. 10025604)

DELETED FROM BID PER FLEET MANAGEMENT DEPARTMENT

ITEM NO.	DESCRIPTION
20	SERIES 741B-LEV SMALL EXTENDED PASSENGER VAN, 7 PASSENGERS, 6-CYLINDER, GASOLINE MUST MEET OR EXCEED THE FEDERAL LEV CERTIFICATION AND INCLUDE THE FOLLOWING STANDARD EQUIPMENT. (SAP NO. 10013191)

MANUFACTURER	**DODGE**	**TOYOTA**
MODEL	GRAND CARAVAN	SIENNA

SPECIFICATION	**MINIMUM REQUIREMENTS**
WHEEL BASE (INCHES)	119
OVERALL LENGTH (INCHES)	200
WIDTH	76
HEIGHT	67
GVWR (POUNDS)	5900
ENGINE DISPLACEMENT (LITERS)	3.5-V6
ENGINE HP	260
ENGINE TORQUE	240
TIRE SIZE	MFG. STANDARD

STANDARD EQUIP. NO	DESCRIPTION
2	AIR CONDITIONING, FRONT & REAR
37.1	COLORS, SOLID (OEM STANDARD)
73.2	MIRRORS, POWER, REARVIEW, LEFT & RIGHT SIDES
77	STEERING, POWER
91	RADIO, AM/FM
128	TRANSMISSION, AUTOMATIC
132.1	OIL COOLER, TRANSMISSION
144	WIPERS, INTERMITTENT
211	SEATS, CLOTH
241	ANTILOCK BRAKING SYSTEM (OEM STANDARD)

OPTIONAL EQUIPMENT:

OPT. NO.	DESCRIPTION
37.4	COLOR: YELLOW FED STD 595B NO. 13507 (QTY: 1-4) (SAP NO. 10024121)
37.5	COLOR: YELLOW FED STD 595B NO. 13507 (QTY: 5 OR MORE) (SAP NO. 10024122)

SERIES 741B-LEV CONTINUED

OPTIONAL EQUIPMENT:

OPT. NO.	DESCRIPTION
208	REAR DEFROSTER (SAP NO. 10024124)
209	POWER LOCKS/POWER WINDOWS PACKAGE (SAP NO. 10024125)
213	RECEIVER HITCH WITH TRAILER CONNECTION (SAP NO. 10024126)
215	CARPET ONLY: FRONT AND REAR (SAP NO. 10024128)
224.4	STROBE LIGHT, MOUNTED ON ROOF, LOW PROFILE (SAP NO. 10013194)
224.8	LIGHTBAR MINIFREEDOM WHELEN MODEL FT8AAAAP (SAP NO. 10013195)
229	SLIDING SIDE DOOR (SAP NO. 10013193)
248	BACKUP ALARM, ELECTRONIC (SAP NO. 10028793)
249	HOUR METER (SAP NO. 10030569)

DELETED FROM BID PER FLEET MANAGEMENT DEPARTMENT

ITEM NO.	DESCRIPTION
21	SERIES 755C-LEV FULL SIZE PASSENGER VAN, 12 PASSENGERS, 8-CYLINDER GASOLINE, MUST MEET OR EXCEED THE FEDERAL LEV CERTIFICATION AND INCLUDE THE FOLLOWING STANDARD EQUIPMENT. (SAP NO. 10013196)

MANUFACTURER	**FORD**	**CHEVROLET**
MODEL	E350 SUPER DUTY WAGON	3500 33406 EXPRESS

SPECIFICATION	**MINIMUM REQUIREMENTS**
WHEEL BASE (INCHES)	135
OVERALL LENGTH (INCHES)	216
WIDTH	79
HEIGHT	81
GVWR (POUNDS)	8900
ENGINE DISPLACEMENT (LITERS)	4.8-V8
ENGINE HP	255
ENGINE TORQUE	295
TIRE/RIM SIZE	MFG. STANDARD

STANDARD EQUIP. NO	DESCRIPTION
2	AIR CONDITIONING, FRONT & REAR
37.1	COLORS, SOLID (OEM STANDARD)
71	MIRRORS, EXTERIOR, REARVIEW, LEFT & RIGHT SIDE
77	STEERING, POWER
91	RADIO, AM/FM
107	FULL SIZE SPARE TIRE AND WHEEL
128	TRANSMISSION, AUTOMATIC
132.1	OIL COOLER, TRANSMISSION,
144	WIPERS, INTERMITTENT
211	CLOTH SEATS
239	RUBBER FLOOR COVERING, FRONT AND REAR
241	ANTILOCK BRAKING SYSTEM (OEM STANDARD)

OPTIONAL EQUIPMENT:

OPT. NO.	DESCRIPTION
37.4	COLOR: YELLOW FED STD 595B NO. 13507 (QTY: 1-4) (SAP NO. 10024129)
37.5	COLOR: YELLOW FED STD 595B NO. 13507 (QTY: 5 OR MORE) (SAP NO. 10024130)

SERIES 755C-LEV CONTINUED

OPTIONAL EQUIPMENT:

OPT. NO.	DESCRIPTION
208	REAR WINDOW DEFROSTER (SAP NO. 10013201)
209	POWER DOOR LOCKS & WINDOW (SAP NO. 10013200)
213.1	FACTORY INSTALLED TRAILER TOWING PACKAGE WITH RECEIVER HITCH (SAP NO. 10013199)
215	CARPET: FRONT & REAR (SAP NO. 10013197)
224.4	STROBE LIGHT, MOUNTED ON ROOF, LOW PROFILE (SAP NO. 10024132)
224.8	LIGHTBAR MINIFREEDOM WHELEN MODEL FT8AAAAP (SAP NO. 10013202)
229	SLIDING SIDE DOOR WITH WINDOW (SAP NO. 10024133)
229.1	HINGED SIDE DOOR (SAP NO. 10024153)

DELETED FROM BID PER FLEET MANAGEMENT DEPARTMENT

ITEM NO.	DESCRIPTION
22	SERIES 760C-LEV FULL SIZE EXTENDED PASSENGER VAN, 15 PASSENGERS, 8-CYLINDER GASOLINE, MUST MEET OR EXCEED THE FEDERAL LEV CERTIFICATION AND INCLUDE THE FOLLOWING STANDARD EQUIPMENT. (SAP NO. 10013203)

MANUFACTURER	**FORD**	**CHEVROLET**
MODEL	E350 SD EXTENDED WAGON	3500 EXPRESS CG33706

SPECIFICATION	**MINIMUM REQUIREMENTS**
WHEEL BASE (INCHES)	138
OVERALL LENGTH (INCHES)	236
WIDTH	79
HEIGHT	82
GVWR (POUNDS)	9400
ENGINE DISPLACEMENT (LITERS)	4.8-V8
ENGINE HP	255
ENGINE TORQUE	295
TIRE/RIM SIZE	MFG. STANDARD

STANDARD EQUIP. NO	DESCRIPTION
2	AIR CONDITIONING, FRONT & REAR
37.1	COLORS, SOLID (OEM STANDARD)
73.2	MIRRORS, REARVIEW, EXTERIOR POWER, MATCHING LEFT AND RIGHT SIDES
77	STEERING, POWER
91	RADIO, AM/FM
107	FULL SIZE SPARE TIRE AND WHEEL
128	TRANSMISSION, AUTOMATIC
132.1	OIL COOLER, TRANSMISSION
144	WIPERS, INTERMITTENT
209	POWER DOOR LOCKS / POWER WINDOWS COMBINATION
239	RUBBER FLOOR COVERING, FRONT AND REAR
241	ANTILOCK BRAKING SYSTEM (OEM STANDARD)

OPTIONAL EQUIPMENT:

OPT. NO.	DESCRIPTION
37.4	COLOR: YELLOW FED STD 595B NO. 13507 (QTY: 1-4) (SAP NO. 10024154)
37.5	COLOR: YELLOW FED STD 595B NO. 13507 (QTY: 5 OR MORE) (SAP NO. 10024155)

SERIES 760C-LEV CONTINUED

OPTIONAL EQUIPMENT:

OPT. NO.	DESCRIPTION
213.1	FACTORY INSTALLED TRAILER TOWING PACKAGE WITH RECEIVER HITCH (SAP NO. 10024083)
215	CARPET: FRONT & REAR (SAP NO. 10013204)
224.4	STROBE LIGHT, MOUNTED ON ROOF, LOW PROFILE (SAP NO. 10013208)
224.8	LIGHTBAR MINIFREEDOM WHELEN MODEL FT8AAAAP (SAP NO. 10013209)
224.15	LIGHT, LED WARNING. SPLIT RED/BLUE COLOR, INSTALLED PER DEPARTMENT INSTRUCTIONS (SAP NO. 10043817
224.17	LIGHT, LED WARNING. SPLIT RED/BLUE COLOR, DASH MOUNTED PER DEPARTMENT INSTRUCTIONS (SAP NO. 10043819)
229	SLIDING SIDE DOOR WITH WINDOW (SAP NO. 10013207)
229.1	HINGED SIDE DOOR (SAP NO. 10024085)

ITEM NO.	DESCRIPTION

23 SERIES 843B-LEV COMPACT PICKUP, EXTENDED CAB, SHORT BED, 5/6 CYLINDER GASOLINE, MUST MEET OR EXCEED THE FEDERAL LEV CERTIFICATION AND INCLUDE THE FOLLOWING STANDARD EQUIPMENT.
(SAP NO. 10013211)

MANUFACTURER	**TOYOTA**	**CHEVROLET**
MODEL	TACOMA	COLORADO CS15403

SPECIFICATION	**MINIMUM REQUIREMENTS**
WHEEL BASE (INCHES)	126
OVERALL LENGTH (INCHES)	207
APPROX. PAYLOAD (POUNDS)	1380
GVWR (POUNDS)	5200
ENGINE DISPLACEMENT (LITERS)	3.7L / 5-CYLINDER
ENGINE HP	235
ENGINE TORQUE	240
TIRE/RIM SIZE	MFG. STANDARD

STANDARD EQUIP. NO	DESCRIPTION
1	AIR CONDITIONING (INCLUDES OPT 87)
29.1	BUMPER, O.E.M. STANDARD
37.1	COLORS, SOLID (OEM STANDARD)
71	MIRRORS, EXTERIOR, LEFT & RIGHT SIDES
77	STEERING, POWER
91	RADIO, AM/FM
107.1	FULL SIZE SPARE TIRE AND WHEEL WITH LOCKABLE CARRIER
128	TRANSMISSION, AUTOMATIC
200.1	HUB CAPS, O.E.M. STANDARD
241	ANTILOCK BRAKING SYSTEM (OEM STANDARD)

OPTIONAL EQUIPMENT:

OPT. NO.	DESCRIPTION

37.4 COLOR: YELLOW FED STD 595B NO. 13507
(QTY: 1-4)
(SAP NO. 10024087)

37.5 COLOR: YELLOW FED STD 595B NO. 13507
(QTY: 5 OR MORE)
(SAP NO. 10024141)

OPTIONAL EQUIPMENT:

OPT. NO.	DESCRIPTION
122.2	TOOL BOX, STEEL, FRONT SINGLE LID (SAP NO. 10024144)
211	CLOTH SEATS (SAP NO. 10024147)
214.5	LIFT GATE (SAP NO. 10030476)
216	PICKUP BED AND TAILGATE LINER (SAP NO. 10024148)
217	SPRAY IN PICKUP BED AND TAILGATE LINER RHINO TUFF-STUFF OR LINE-X (SAP NO. 10024149)
224.4	STROBE LIGHT, MOUNTED ON ROOF, LOW PROFILE (SAP NO. 10024150)
224.8	LIGHT BAR MINIFREEDOM WHELEN MODEL FT8AAAAP (SAP NO. 10024151)
249	HOUR METER (SAP NO. 10030462)
264	HEADACHE RACK (SAP NO. 10030172)

ITEM NO.	DESCRIPTION

24 SERIES 855C-LEV PICKUP, REGULAR CAB, SHORT BED, 6 OR 8-CYLINDER GASOLINE, MUST MEET OR EXCEED THE FEDERAL LEV CERTIFICATION AND INCLUDE THE FOLLOWING STANDARD EQUIPMENT. (SAP NO. 10013213)

MANUFACTURER	**FORD**	**CHEVROLET**	**DODGE**
MODEL	F150	C1500	1500

SPECIFICATION	**MINIMUM REQUIREMENTS**
WHEEL BASE (INCHES)	119
OVERALL LENGTH (INCHES)	205
GVWR (POUNDS)	6350
APPROXIMATE PAYLOAD (POUNDS)	1580
ENGINE DISPLACEMENT (LITERS)	3.7L / V6
ENGINE HP	302
ENGINE TORQUE	278
TIRE/RIM SIZE	MFG. STANDARD

STANDARD EQUIP. NO	DESCRIPTION
1	AIR CONDITIONING (INCLUDES OPT 87)
29.1	BUMPER, O.E.M. STANDARD
37.1	COLORS, SOLID (OEM STANDARD)
71	MIRRORS, LOW MOUNT TYPE
77	STEERING, POWER
91	RADIO, AM/FM
107.1	FULL SIZE SPARE TIRE AND WHEEL WITH LOCKABLE CARRIER
128	TRANSMISSION, AUTOMATIC
132.1	OIL COOLER, TRANSMISSION
144	WIPERS, INTERMITTENT
200.1	HUB CAPS, O.E.M. STANDARD
241	ANTILOCK BRAKING SYSTEM (OEM STANDARD)
253	CARGO AREA LIGHT

OPTIONAL EQUIPMENT:

OPT. NO.	DESCRIPTION

37.4 COLOR: YELLOW FED STD 595B NO. 13507
(QTY: 1-4)
(SAP NO. 10013221)

37.5 COLOR: YELLOW FED STD 595B NO. 13507
(QTY: 5 OR MORE)
(SAP NO. 10024156)

49 LARGER DISPLACEMENT ENGINE
(SAP NO. 10039324)

OPTIONAL EQUIPMENT:

OPT. NO.	DESCRIPTION
111A	SPOTLIGHT, LEFT SIDE (SAP NO. 10013216)
122.1	TOOL BOX, STEEL, FRONT, SINGLE LID (SAP NO. 10013219)
123.1	TOOL BOX ALUMINUM, FRONT, SINGLE LID (SAP NO. 10013218)
211	CLOTH SEATS (SAP NO. 10013215)
213	RECEIVER HITCH WITH TRAILER CONNECTION (SAP NO. 10024161)
213.1	FACTORY INSTALLED TRAILER TOWING PACKAGE WITH RECEIVER HITCH (SAP NO. 10013220)
216	PICKUP BED AND TAILGATE LINER (SAP NO. 10013214)
217	SPRAY IN PICKUP BED AND TAILGATE LINER RHINO TUFF-STUFF OR LINE-X (SAP NO. 10024162)
224.4	STROBE LIGHT, MOUNTED ON ROOF, LOW PROFILE (SAP NO. 10013217)
224.8	LIGHTBAR MINIFREEDOM WHELEN MODEL FT8AAAAP (SAP NO. 10013100)
243	COMBINATION HITCH, BUYERS PRODUCTS NO. BH82000 WITH PM 87 HITCH MOUNT AND HP6253WC HITCH PIN. (IF ORDERING THIS OPTION, DEPARTMENT MUST ORDER OPTION 213 OR 213.1.) (SAP NO. 10024167)
243.1	REPLACEMENT BALL BUYERS PRODUCT NO. RB2516 (SAP NO. 10024166)
249	METER, HOUR (SAP NO. 10030449)
264	HEADACHE RACK (SAP NO. 10030173)

ITEM NO.	DESCRIPTION

25 SERIES 861C-LEV PICKUP, REGULAR CAB, LONG BED, 6 OR 8-CYLINDER GASOLINE, MUST MEET OR EXCEED THE FEDERAL LEV CERTIFICATION AND INCLUDE THE FOLLOWING STANDARD EQUIPMENT. (SAP NO. 10013222)

MANUFACTURER	**FORD**	**CHEVROLET**	**DODGE**
MODEL	F150	C1500	1500

SPECIFICATION	**MINIMUM REQUIREMENTS**
WHEEL BASE (INCHES)	133
OVERALL LENGTH (INCHES)	224
GVWR (POUNDS)	6400
PAYLOAD	1730
ENGINE DISPLACEMENT (LITERS)	3.7L /-V6
ENGINE HP	302
ENGINE TORQUE	278
TIRE/RIM SIZE	MFG. STANDARD

STANDARD EQUIP. NO	DESCRIPTION
1	AIR CONDITIONING (INCLUDES OPT 87)
29.1	BUMPER, O.E.M. STANDARD
37.1	COLORS, SOLID (OEM STANDARD)
71	MIRRORS, LOW MOUNT TYPE
77	STEERING, POWER
91	RADIO, AM/FM
107.1	FULL SIZE SPARE TIRE AND WHEEL WITH LOCKABLE CARRIER
128	TRANSMISSION, AUTOMATIC
132.1	OIL COOLER, TRANSMISSION
144	WIPERS, INTERMITTENT
200.1	HUB CAPS, O.E.M. STANDARD
241	ANTILOCK BRAKING SYSTEM (OEM STANDARD)
253	CARGO AREA LIGHT

OPTIONAL EQUIPMENT:

OPT. NO.	DESCRIPTION

37.4 COLOR: YELLOW FED STD 595B NO. 13507
(QTY: 1-4)
(SAP NO. 10024165)

37.5 COLOR: YELLOW FED STD 595B NO. 13507
(QTY: 5 OR MORE)
(SAP NO. 10024164)

49 LARGER DISPLACEMENT ENGINE
(SAP NO. 10039325)

111A SPOTLIGHT, LEFT SIDE
(SAP NO. 10013224)

SERIES 861C-LEV CONTINUED

OPTIONAL EQUIPMENT:

OPT. NO.	DESCRIPTION
122.1	TOOL BOX, STEEL, FRONT, SINGLE LID (SAP NO. 10024163)
123.1	TOOL BOX, ALUMINUM, FRONT, SINGLE LID (SAP NO. 10013226)
123.5	TOOL BOX, ALUMINUM, FRONT, LOW PROFILE (SAP NO. 10039182)
211	CLOTH SEATS (SAP NO. 10013223)
213	RECEIVER HITCH WITH TRAILER CONNECTION (SAP NO. 10010024159)
213.1	FACTORY INSTALLED TRAILER TOWING PACKAGE WITH RECEIVER HITCH (SAP NO. 10024157)
214	LIFT GATE (SAP NO. 10043569)
216	PICKUP BED AND TAILGATE LINER (SAP NO. 10024152)
217	SPRAY IN PICKUP BED AND TAILGATE LINER RHINO TUFF-STUFF OR LINE-X (SAP NO. 10024146)
224.4	STROBE LIGHT, MOUNTED ON ROOF, LOW PROFILE (SAP NO. 10013225)
224.8	LIGHTBAR MINIFREEDOM WHELEN MODEL FT8AAAAP (SAP NO. 10013227)
243	COMBINATION HITCH, BUYERS PRODUCTS NO. BH82000 WITH PM 87 HITCH MOUNT AND HP6253 WC HITCH PIN. (IF ORDERING THIS OPTION, DEPARTMENT MUST ORDER OPTION 213 OR 213.1.) (SAP NO. 10024145)
243.1	REPLACEMENT BALL BUYERS PRODUCT NO. RB2516 (SAP NO. 10024143)

OPTIONAL EQUIPMENT:

OPT. NO.	DESCRIPTION
249	HOUR METER (SAP NO. 10030460)
264	HEADACHE RACK (SAP NO. 10030174)

ITEM NO.	DESCRIPTION

26 SERIES 862C-LEV PICKUP EXTENDED CAB, SHORT BED, 6 OR 8-CYLINDER GASOLINE, MUST MEET OR EXCEED THE FEDERAL LEV CERTIFICATION AND INCLUDE THE FOLLOWING STANDARD EQUIPMENT. (SAP NO. 10013228)

MANUFACTURER	**FORD**	**CHEVROLET**	**DODGE**
MODEL	F150 EXT	C1500 EXT	1500 QUAD CAB

SPECIFICATION	**MINIMUM REQUIREMENTS**
WHEEL BASE (INCHES)	140
OVERALL LENGTH (INCHES)	229
GVWR (POUNDS)	6700
APPROX. PAYLOAD ALLOWANCE (POUNDS)	1515
ENGINE DISPLACEMENT (LITERS)	3.7L /-V6
ENGINE HP	302
ENGINE TORQUE	278
TIRE/RIM SIZE	MFG. STANDARD

STANDARD EQUIP. NO	DESCRIPTION
1	AIR CONDITIONING (INCLUDES OPT 87)
29.1	BUMPER, O.E.M. STANDARD
37.1	COLORS, SOLID (OEM STANDARD)
71	MIRRORS, LOW MOUNT TYPE
77	STEERING, POWER
91	RADIO, AM/FM
107.1	FULL SIZE SPARE TIRE AND WHEEL WITH LOCKABLE CARRIER
128	TRANSMISSION, AUTOMATIC
132.1	OIL COOLER, TRANSMISSION
144	WIPERS, INTERMITTENT
200.1	HUB CAPS, O.E.M. STANDARD
241	ANTILOCK BRAKING SYSTEM (OEM STANDARD)
253	CARGO AREA LIGHT

OPTIONAL EQUIPMENT:

OPT. NO.	DESCRIPTION
37.4	COLOR: YELLOW FED STD 595B NO. 13507 (QTY: 1-4) (SAP NO. 10024142)
37.5	COLOR: YELLOW FED STD 595B NO. 13507 (QTY: 5 OR MORE) (SAP NO. 10024140)
49	LARGER DISPLACEMENT ENGINE (SAP NO. 10013232)
52	FOUR WHEEL DRIVE (SAP NO. 10043814)
111A	SPOTLIGHT, LEFT SIDE (SAP NO. 10013235)

OPTIONAL EQUIPMENT:

OPT. NO.	DESCRIPTION
122.1	TOOL BOX, STEEL, FRONT, SINGLE LID (SAP NO. 10024089)
123.1	TOOL BOX, ALUMINUM, FRONT, SINGLE LID (SAP NO. 10024088)
123.5	TOOL BOX, ALUMINUM, FRONT, LOW PROFILE (SAP NO. 10043813)
204	SINGLE KEY LOCKING (SAP NO. 10013234)
209	POWER DOOR LOCKS & WINDOWS (SAP NO. 10013233)
211	CLOTH SEATS (SAP NO. 10013229)
213	RECEIVER HITCH WITH TRAILER CONNECTION (SAP NO. 10024086)
213.1	FACTORY INSTALLED TRAILER TOWING PACKAGE WITH RECEIVER HITCH (SAP NO. 10013236)
214	LIFT GATE (SAP NO. 10030477)
216	PICKUP BED AND TAILGATE LINER (SAP NO. 10024084)
217	SPRAY IN PICKUP BED AND TAILGATE LINER (SAP NO. 10013391)
224.4	STROBE LIGHT, MOUNTED ON ROOF, LOW PROFILE (SAP NO. 10024105)
224.8	LIGHTBAR MINIFREEDOM WHELEN MODEL FT8AAAAP (SAP NO. 10024104)

OPTIONAL EQUIPMENT:

OPT. NO.	DESCRIPTION
243	COMBINATION HITCH, BUYERS PRODUCTS NO. BH82000 WITH PM 87 HITCH MOUNT AND HP6253 WC HITCH PIN. (IF ORDERING THIS OPTION, DEPARTMENT MUST ORDER OPTION 213 OR 213.1.) (SAP NO. 10024103)
243.1	REPLACEMENT BALL BUYERS PRODUCT NO. RB2516 (SAP NO. 10024102)
249	ENGINE HOUR METER (SAP NO. 10013230)
264	HEADACHE RACK (SAP NO. 10030175)

ITEM NO.	DESCRIPTION
27	SERIES 867C-LEV PICKUP CREW CAB, LONG BED, 8-CYLINDER, MUST MEET OR EXCEED THE FEDERAL LEV CERTIFICATION AND INCLUDE THE FOLLOWING STANDARD EQUIPMENT. (SAP NO. 10030741)

MANUFACTURER	**FORD**	**CHEVROLET**
MODEL	F250	C2500HD CC20943

SPECIFICATION	**MINIMUM REQUIREMENTS**
WHEEL BASE (INCHES)	167
OVERALL LENGTH (INCHES)	259
GVWR (POUNDS)	8800
APPROX. PAYLOAD ALLOWANCE (POUNDS)	2800
ENGINE DISPLACEMENT (LITERS)	5.7L V8
ENGINE HP	360
ENGINE TORQUE	380
TIRE/RIM SIZE	MFG. STANDARD

STANDARD EQUIP. NO	DESCRIPTION
1	AIR CONDITIONING (INCLUDES OPT 87)
29.1	BUMPER, O.E.M. STANDARD
37.1	COLORS, SOLID (OEM STANDARD)
59.1	FUEL TANK(S), 30 GALLON CAPACITY
72	MIRRORS, EXTENDABLE MANUALLY
77	STEERING, POWER
91	RADIO, AM/FM
107.1	FULL SIZE SPARE TIRE AND WHEEL WITH LOCKABLE CARRIER
128	TRANSMISSION, AUTOMATIC
132.1	OIL COOLER, TRANSMISSION
144	WIPERS, INTERMITTENT
200.1	HUB CAPS, O.E.M. STANDARD
241	ANTILOCK BRAKING SYSTEM (OEM STANDARD)
253	CARGO AREA LIGHT

OPTIONAL EQUIPMENT:

OPT. NO.	DESCRIPTION
37.4	COLOR: YELLOW FED STD 595B NO. 13507 (SAP NO. 10039202)
52	FOUR-WHEEL DRIVE (SAP NO. 10036601)
122.1	TOOL BOX, STEEL, FRONT, SINGLE LID (SAP NO. 10036602)
123.1	TOOL BOX, ALUMINUM, FRONT, SINGLE LID (SAP NO. 10036603)
209	POWER DOOR LOCKS/WINDOWS (SAP NO. 10036606)

SERIES 867C-LEV CONTINUED”

OPTIONAL EQUIPMENT:

OPT. NO.	DESCRIPTION
211	CLOTH SEATS (SAP NO. 10036604)
213.1	FACTORY INSTALLED TRAILER TOWING PACKAGE WITH RECEIVER HITCH (SAP NO. 10036605)
217	SPRAY IN BED LINER (SAP NO. 10036610)
224.4	STROBE LIGHT, ROOF-MOUNTED (SAP NO. 10013246)
243	COMBINATION HITCH, BUYERS PRODUCTS NO. BH8200 WITH PM87 HITCH MOUNT AND HP6253 WC HITCH PIN. TWO-BUYERS PRODUCT B40 LASHING WELDED ON TOP OF BUMPER (IF ORDERING THIS OPTION DEPARTMENT MUST ORDER OPTION 213 OR 213.1) (SAP NO. 10039200)
264	HEADACHE RACK (SAP NO. 10039201)

ITEM NO.	DESCRIPTION

28 SERIES 868C-LEV PICKUP EXTENDED CAB, LONG BED, SINGLE REAR WHEEL, 8-CYLINDER GASOLINE, MUST MEET OR EXCEED THE FEDERAL LEV CERTIFICATION AND INCLUDE THE FOLLOWING STANDARD EQUIPMENT.
(SAP NO. 10013248)

MANUFACTURER	**FORD**	**CHEVROLET**
MODEL	F250SD EXT	C2500HD CC20953 EXT

SPECIFICATION	**MINIMUM REQUIREMENTS**
WHEEL BASE (INCHES)	158
OVERALL LENGTH (INCHES)	248
GVWR (POUNDS)	9500
APPROX. PAYLOAD (POUNDS)	3350
ENGINE DISPLACEMENT (LITERS)	6.0L - V8
ENGINE HP	360
ENGINE TORQUE	380
TIRE/RIM SIZE	MFG. STANDARD

STANDARD EQUIP. NO	DESCRIPTION
1	AIR CONDITIONING INCLUDES OPT 87
29.1	BUMPER, O.E.M. STANDARD
37.1	COLORS, SOLID (OEM STANDARD)
72	MIRRORS, EXTENDABLE MANUALLY
77	STEERING, POWER
91	RADIO, AM/FM
107.1	FULL SIZE SPARE TIRE AND WHEEL WITH LOCKABLE CARRIER
128	TRANSMISSION, AUTOMATIC
132.1	OIL COOLER, TRANSMISSION
144	WIPERS, INTERMITTENT
200.1	HUB CAPS, OEM STANDARD
241	ANTILOCK BRAKING SYSTEM (OEM STANDARD)
253	CARGO AREA LIGHT

OPTIONAL EQUIPMENT:

OPT. NO.	DESCRIPTION

16 ALTERNATOR, HEAVY DUTY
(SAP NO. 10025601)

37.4 COLOR: YELLOW FED STD 595B NO. 13507
(QTY: 1-4)
(SAP NO. 10024101)

37.5 COLOR: YELLOW FED STD 595B NO. 13507
(QTY: 5 OR MORE)
(SAP NO. 10024100)

52 DRIVE, FOUR WHEEL
(SAP NO. 10024011)

111A SPOTLIGHT, LEFT SIDE
(SAP NO. 10013252)

OPTIONAL EQUIPMENT:

OPT. NO.	DESCRIPTION
122.1	TOOL BOX, STEEL, FRONT, SINGLE LID (SAP NO. 10024019)
123.1	TOOL BOX, ALUMINUM, FRONT, SINGLE LID (SAP NO. 10013254)
123.5	TOOL BOX, ALUMINUM, FRONT, LOW PROFILE (SAP NO. 10039184)
211	CLOTH SEATS (SAP NO. 10024017)
213.1	FACTORY INSTALLED TRAILER TOWING PACKAGE WITH RECEIVER HITCH (SAP NO. 10013251)
214	LIFT GATE (SAP NO. 10024016)
216	PICKUP BED AND TAILGATE LINER (SAP NO. 10024015)
217	SPRAY IN PICKUP BED AND TAILGATE LINER RHINO TUFF-STUFF OR LINE-X (SAP NO. 10013253)
223	DIFFERENTIAL, OPTIONAL RATIO (SAP NO. 10025602)
224.4	STROBE LIGHT, MOUNTED ON ROOF, LOW PROFILE (SAP NO. 10024014)
224.8	LIGHTBAR MINIFREEDOM WHELEN MODEL FT8AAAAP (SAP NO. 10024013)
243	COMBINATION HITCH, BUYERS PRODUCTS NO. BH82000 WITH PM87 HITCH MOUNT AND HP6253 WC HITCH PIN. TWO-BUYERS PRODUCT B40 LASHING WELDED ON TOP OF BUMPER. (IF ORDERING THIS OPTION, DEPARTMENT MUST ORDER OPTION 213 OR 213.1) (SAP NO. 10013249)
243.1	REPLACEMENT BALL BUYERS PRODUCT NO. RB2516 (SAP NO. 10024012)
249	HOUR METER (SAP NO. 10030478)
251	ELECTRIC BRAKE CONTROLLER (SAP NO. 10013250)
264	HEADACHE RACK (SAP NO. 10030479)

ITEM NO.	DESCRIPTION

29 SERIES 868D-LEV PICKUP EXTENDED CAB, LONG BED, SINGLE REAR WHEEL, DIESEL ENGINE, MUST MEET OR EXCEED THE FEDERAL LEV CERTIFICATION AND INCLUDE THE FOLLOWING STANDARD EQUIPMENT.
(SAP NO. 10024305)

MANUFACTURER	**FORD**	**CHEVROLET**	**DODGE**
MODEL	F250SD-DIESEL	C2500HD-CC20953-DIESEL	2500 QUAD CAB-DIESEL

SPECIFICATION	**MINIMUM REQUIREMENTS**
WHEEL BASE (INCHES)	158
OVERALL LENGTH (INCHES)	248
BOX LENGTH (INCHES)	96
GVWR (POUNDS)	9400
APPROX. PAYLOAD (POUNDS)	2620
ENGINE DISPLACEMENT (LITERS)	6.6L
ENGINE HP	335
ENGINE TORQUE	685
TIRE/RIM SIZE	MFG. STANDARD

STANDARD EQUIP. NO	DESCRIPTION
1	AIR CONDITIONING INCLUDES OPT 87
29.1	BUMPER, O.E.M. STANDARD
37.1	COLORS, SOLID (OEM STANDARD)
72	MIRRORS, EXTENDABLE MANUALLY
77	STEERING, POWER
91	RADIO, AM/FM
107.1	FULL SIZE SPARE TIRE AND WHEEL WITH LOCKABLE CARRIER
128	TRANSMISSION, AUTOMATIC
132.1	OIL COOLER, TRANSMISSION
144	WIPERS, INTERMITTENT
200.1	HUB CAPS, OEM STANDARD
241	ANTILOCK BRAKING SYSTEM (OEM STANDARD)
253	CARGO AREA LIGHT

OPTIONAL EQUIPMENT:

OPT. NO.	DESCRIPTION

37.4 COLOR: YELLOW FED STD 595B NO. 13507
(QTY: 1-4)
(SAP NO. 10024306)

37.5 COLOR: YELLOW FED STD 595B NO. 13507
(QTY: 5 OR MORE)
(SAP NO. 10024313)

52 DRIVE, FOUR WHEEL
(SAP NO. 10024314)

122.1 TOOL BOX, STEEL, FRONT, SINGLE LID
(SAP NO. 10024317)

123.1 TOOL BOX, ALUMINUM, FRONT, SINGLE LID
(SAP NO. 10024318)

SERIES 868D-LEV CONTINUED

OPTIONAL EQUIPMENT:

OPT. NO.	DESCRIPTION
211	CLOTH SEATS (SAP NO. 10024320)
213.1	FACTORY INSTALLED TRAILER TOWING PACKAGE WITH RECEIVER HITCH (SAP NO. 10024321)
214	LIFT GATE (SAP NO. 10024322)
216	PICKUP BED AND TAILGATE LINER (SAP NO. 10024323)
217	SPRAY IN PICKUP BED AND TAILGATE LINER RHINO TUFF STUFF OR LINE X (SAP NO. 10024324)
224.4	STROBE LIGHT, MOUNTED ON ROOF, LOW PROFILE (SAP NO. 10024325)
224.8	LIGHTBAR MINIFREEDOM WHELEN MODEL FT8AAAAP (SAP NO. 10024326)
243	COMBINATION HITCH, BUYERS PRODUCTS NO. BH82000 WITH PM87 HITCH MOUNT AND HP6253 WC HITCH PIN. TWO-BUYERS PRODUCT B40 LASHING WELDED ON TOP OF BUMPER. (IF ORDERING THIS OPTION, DEPARTMENT MUST ORDER OPTION 213 OR 213.1) (SAP NO. 10024327)
243.1	REPLACEMENT BALL BUYERS PRODUCT NO. RB2516 (SAP NO. 10024328)
249	HOUR METER (SAP NO. 10024329)
251	ELECTRIC BRAKE CONTROLLER (SAP NO. 10024330)
264	HEADACHE RACK (SAP NO. 10024331)
265	WINCH (SAP NO. 10024332)
265.1	WINCH ACCESSORY KIT (SAP NO. 10024333)

ITEM NO.	DESCRIPTION

30 SERIES 872C-LEV PICKUP, REGULAR CAB, LONG BED, SINGLE REAR WHEEL, 8-CYLINDER GASOLINE, MUST MEET OR EXCEED THE FEDERAL LEV CERTIFICATION AND INCLUDE THE FOLLOWING STANDARD EQUIPMENT.
(SAP NO. 10013256)

MANUFACTURER	**FORD**	**CHEVROLET**	**DODGE**
MODEL	F250SD	C2500HD CC20903	2500

SPECIFICATION	**MINIMUM REQUIREMENTS**
WHEEL BASE (INCHES)	133
OVERALL LENGTH (INCHES)	225
GVWR (POUNDS)	8650
APPROX. PAYLOAD (POUNDS)	3190
ENGINE DISPLACEMENT (LITERS)	5.7L-V8
ENGINE HP	360
ENGINE TORQUE	380
TIRE/RIM SIZE	MFG. STANDARD

STANDARD EQUIP. NO	DESCRIPTION
1	AIR CONDITIONING (INCLUDES OPT 87)
29.1	BUMPER, O.E.M. STANDARD
37.1	COLORS, SOLID (OEM STANDARD)
72	MIRRORS, EXTENDABLE MANUALLY
77	STEERING, POWER
91	RADIO, AM/FM
107.1	FULL SIZE SPARE TIRE AND WHEEL WITH MANUFACTURER'S CARRIER
128	TRANSMISSION, AUTOMATIC
132.1	OIL COOLER, TRANSMISSION
144	WIPERS, INTERMITTENT
200.1	HUB CAPS, OEM STANDARD
241	ANTILOCK BRAKING SYSTEM (OEM STANDARD)
253	CARGO AREA LIGHT

OPTIONAL EQUIPMENT:

OPT. NO.	DESCRIPTION

37.4 COLOR: YELLOW FED STD 595B NO. 13507
(QTY: 1-4)
(SAP NO. 10013271)

37.5 COLOR: YELLOW FED STD 595B NO. 13507
(QTY: 5 OR MORE)
(SAP NO. 10013272)

45 LIMITED SLIP DIFFERENTIAL
(SAP NO. 10013262)

52 DRIVE, FOUR WHEEL
(SAP NO. 10024031)

OPTIONAL EQUIPMENT:

OPT. NO.	DESCRIPTION
111A	SPOTLIGHT, LEFT SIDE (SAP NO. 10013264)
121.1	TOOL BOX, STEEL, FRONT, DOUBLE LID (SAP NO. 10037556)
122.1	TOOL BOX, STEEL, FRONT, SINGLE LID (SAP NO. 10013269)
122.5	TOOL BOX, STEEL, SIDE (WIDE) (SAP NO. 10037557)
122.5A	TRAY, SIDE TOOL BOX (FOR TOOL BOX OPTION NO. 122.5) (SAP NO. 10037558)
123.1	TOOL BOX, ALUMINUM, FRONT, SINGLE LID (SAP NO. 10013268)
213.1	FACTORY INSTALLED TRAILER TOWING PACKAGE WITH RECEIVER HITCH (SAP NO. 10013259)
214	LIFT GATE (SAP NO. 10013261)
216	PICKUP BED AND TAILGATE LINER (SAP NO. 10013263)
217	SPRAY IN PICKUP BED AND TAILGATE LINER (SAP NO. 10013266)
224.4	STROBE LIGHT, MOUNTED ON ROOF, LOW PROFILE (SAP NO. 10013267)
224.5	ROOF-MOUNTED SPOTLIGHT (SAP NO. 10013265)
224.6	DUAL, ROOF-MOUNTED SPOTLIGHTS (SAP NO. 10024033)
224.8	LIGHTBAR MINIFREEDOM WHELEN MODEL FT8AAAAP (SAP NO. 10013270)

OPTIONAL EQUIPMENT:

OPT. NO.	DESCRIPTION
243	COMBINATION HITCH, BUYERS PRODUCTS NO. BH82000 WITH PM87 HITCH MOUNT AND HP6253 WC HITCH PIN. TWO-BUYERS PRODUCT B40 LASHING WELDED ON TOP OF BUMPER. (IF ORDERING THIS OPTION, DEPARTMENT MUST ORDER OPTION 213 OR 213.1) (SAP NO. 10024034)
243.1	REPLACEMENT BALL BUYERS PRODUCT NO. RB2516 (SAP NO. 10024035)
249	HOUR METER (SAP NO. 10030480)
251	ELECTRIC BRAKE CONTROLLER (SAP NO. 10024036)
264	HEADACHE RACK (SAP NO. 10013260)
265	WINCH (SAP NO. 10024037)
265.1	WINCH ACCESSORY KIT (SAP NO. 10024038)

ITEM NO.	DESCRIPTION

31 SERIES 872D-LEV PICKUP, REGULAR CAB, LONG BED, SINGLE REAR WHEEL, DIESEL ENGINE, MUST MEET OR EXCEED THE FEDERAL LEV CERTIFICATION AND INCLUDE THE FOLLOWING STANDARD EQUIPMENT.
(SAP NO. 10024187)

MANUFACTURER	**FORD**	**CHEVROLET**	**DODGE**
MODEL	F250SD-DIESEL	C2500HD- CC20903-DIESEL	2500-DIESEL

SPECIFICATION	**MINIMUM REQUIREMENTS**
WHEEL BASE (INCHES)	133
OVERALL LENGTH (INCHES)	225
BOX LENGTH (INCHES)	96
GVWR (POUNDS)	9000
APPROX. PAYLOAD (POUNDS)	3100
ENGINE DISPLACEMENT (LITERS)	6.6L
ENGINE HP	335
ENGINE TORQUE	685
TIRE/RIM SIZE	MFG. STANDARD

STANDARD

EQUIP. NO	DESCRIPTION
1	AIR CONDITIONING (INCLUDES OPT 87)
29.1	BUMPER, O.E.M. STANDARD
37.1	COLORS, SOLID (OEM STANDARD)
72	MIRRORS, EXTENDABLE MANUALLY
77	STEERING, POWER
91	RADIO, AM/FM
107.1	FULL SIZE SPARE TIRE AND WHEEL WITH LOCKABLE CARRIER
128	TRANSMISSION, AUTOMATIC
132.1	OIL COOLER, TRANSMISSION
144	WIPERS, INTERMITTENT
200.1	HUB CAPS, OEM STANDARD
241	ANTILOCK BRAKING SYSTEM (OEM STANDARD)
253	CARGO AREA LIGHT

OPTIONAL EQUIPMENT:

OPT. NO.	DESCRIPTION

37.4 COLOR: YELLOW FED STD 595B NO. 13507
(QTY: 1-4)
(SAP NO. 10024191)

37.5 COLOR: YELLOW FED STD 595B NO. 13507
(QTY: 5 OR MORE)
(SAP NO. 10024194)

52 DRIVE, FOUR WHEEL
(SAP NO. 10024195)

OPTIONAL EQUIPMENT:

OPT. NO.	DESCRIPTION
111A	SPOTLIGHT, LEFT SIDE (SAP NO. 10024197)
122.1	TOOL BOX, STEEL, FRONT, SINGLE LID (SAP NO. 10024199)
123.1	TOOL BOX, ALUMINUM, FRONT, SINGLE LID (SAP NO. 10024200)
213.1	FACTORY INSTALLED TRAILER TOWING PACKAGE WITH RECEIVER HITCH (SAP NO. 10024204)
214	LIFT GATE (SAP NO. 10024211)
216	PICKUP BED AND TAILGATE LINER (SAP NO. 10024213)
217	SPRAY IN PICKUP BED AND TAILGATE LINER RHINO TUFF-STUFF OR LINE-X (SAP NO. 10024214)
224.4	STROBE LIGHT, MOUNTED ON ROOF, LOW PROFILE (SAP NO. 10024217)
224.8	LIGHTBAR MINIFREEDOM WHELEN MODEL FT8AAAAP (SAP NO. 10024218)
243	COMBINATION HITCH, BUYERS PRODUCTS NO. BH82000 WITH PM87 HITCH MOUNT AND HP6253 WC HITCH PIN. TWO-BUYERS PRODUCT B40 LASHING WELDED ON TOP OF BUMPER. (IF ORDERING THIS OPTION, DEPARTMENT MUST ORDER OPTION 213 OR 213.1) (SAP NO. 10024220)
243.1	REPLACEMENT BALL BUYERS PRODUCT NO RB2516 (SAP NO. 10024221)
249	HOUR METER (SAP NO. 10024223)
251	ELECTRIC BRAKE CONTROLLER (SAP NO. 10024225)
264	HEADACHE RACK (SAP NO. 10024229)
265	WINCH (SAP NO. 10024230)
265.1	WINCH ACCESSORY KIT (SAP NO. 10024231)

ITEM NO.	DESCRIPTION

32 SERIES 876C-LEV PICKUP, REGULAR CAB, LONG BED, DUAL REAR WHEELS, 8-CYLINDER GASOLINE, MUST MEET OR EXCEED THE FEDERAL LEV CERTIFICATION AND INCLUDE THE FOLLOWING STANDARD EQUIPMENT.
(SAP NO. 10024232)

MANUFACTURER	**FORD**	**CHEVROLET**
MODEL	F350SD-DRW	C3500HD CC30903

SPECIFICATION	**MINIMUM REQUIREMENTS**
WHEEL BASE (INCHES)	167
OVERALL LENGTH (INCHES)	259
GVWR (POUNDS)	10,500
APPROX. PAYLOAD (POUNDS)	4000
ENGINE DISPLACEMENT (LITERS)	6.0-V8
ENGINE HP	316
ENGINE TORQUE	380
TIRE/RIM SIZE	MFG. STANDARD

STANDARD EQUIP. NO	DESCRIPTION
1	AIR CONDITIONING (INCLUDES OPT 87)
29.1	BUMPER, O.E.M. STANDARD
37.1	COLORS, SOLID (OEM STANDARD)
59.1	FUEL TANK(S), 30 GALLON CAPACITY
72	MIRRORS, EXTENDABLE MANUALLY
77	STEERING, POWER
91	RADIO, AM/FM
107.1	FULL SIZE SPARE TIRE AND WHEEL WITH LOCKABLE CARRIER
128	TRANSMISSION, AUTOMATIC
132.1	OIL COOLER, TRANSMISSION
144	WIPERS, INTERMITTENT
200.1	HUB CAPS, OEM STANDARD
241	ANTILOCK BRAKING SYSTEM (OEM STANDARD)
253	CARGO AREA LIGHT

OPTIONAL EQUIPMENT:

OPT. NO.	DESCRIPTION
37.4	COLOR: YELLOW FED STD 595B NO. 13507 (QTY: 1-4) (SAP NO. 10024234)
37.5	COLOR: YELLOW FED STD 595B NO. 13507 (QTY: 5 OR MORE) (SAP NO. 10024235)
45	LIMITED SLIP DIFFERENTIAL (SAP NO. 10024237)
49	ENGINE, LARGER DISPLACEMENT (SAP NO. 10024239)

OPTIONAL EQUIPMENT:

OPT. NO.	DESCRIPTION
111A	SPOTLIGHT, LEFT SIDE (SAP NO. 10024241)
122.1	TOOL BOX, STEEL, FRONT, SINGLE LID (SAP NO. 10024243)
123.1	TOOL BOX, ALUMINUM, FRONT, SINGLE LID (SAP NO. 10024246)
213.1	FACTORY INSTALLED TRAILER TOWING PACKAGE WITH RECEIVER HITCH (SAP NO. 10024249)
214	LIFT GATE (SAP NO. 10024250)
216	PICKUP BED AND TAILGATE LINER (SAP NO. 10024251)
217	SPRAY IN PICKUP BED AND TAILGATE LINER RHINO TUFF-STUFF OR LINE-X (SAP NO. 10024252)
223	DIFFERENTIAL RATIO (SAP NO. 10024253)
224.4	STROBE LIGHT, MOUNTED ON ROOF, LOW PROFILE (SAP NO. 10024180)
224.8	LIGHTBAR MINIFREEDOM WHELEN MODEL FT8AAAAP (SAP NO. 10024181)
243	COMBINATION HITCH, BUYERS PRODUCTS NO. BH82000 WITH PM87 HITCH MOUNT AND HP6253 WC HITCH PIN. TWO-BUYERS PRODUCT B40 LASHING WELDED ON TOP OF BUMPER. (IF ORDERING THIS OPTION, DEPARTMENT MUST ORDER OPTION 213 OR 213.1.) (SAP NO. 10024182)
243.1	REPLACEMENT BALL BUYERS PRODUCT NO. RB2516 (SAP NO. 10024183)
251	ELECTRIC BRAKE CONTROLLER (SAP NO. 10024184)
264	HEADACHE RACK (SAP NO. 10030177)

ITEM NO.	DESCRIPTION

33 SERIES 876D-LEV PICKUP, REGULAR CAB, LONG BED, DUAL REAR WHEELS, DIESEL ENGINE, MUST MEET OR EXCEED THE FEDERAL LEV CERTIFICATION AND INCLUDE THE FOLLOWING STANDARD EQUIPMENT.
(SAP NO. 10024185)

MANUFACTURER	**FORD**	**CHEVROLET**
MODEL	F350SD-DRW-DIESEL	C3500HD CC30903-DIESEL

SPECIFICATION	**MINIMUM REQUIREMENTS**
WHEEL BASE (INCHES)	133
OVERALL LENGTH (INCHES)	225
BOX LENGTH (INCHES)	96
GVWR (POUNDS)	12,000
APPROX. PAYLOAD (POUNDS)	6500
ENGINE DISPLACEMENT (LITERS)	6.6L-DIESEL
ENGINE HP	335
ENGINE TORQUE	685
TIRE/RIM SIZE	MFG. STANDARD

STANDARD

EQUIP. NO	DESCRIPTION
1	AIR CONDITIONING (INCLUDES OPT 87)
29.1	BUMPER, O.E.M. STANDARD
37.1	COLORS, SOLID (OEM STANDARD)
59.3	FUEL TANK(S), 25 GALLON CAPACITY
72	MIRRORS, EXTENDABLE MANUALLY
77	STEERING, POWER
91	RADIO, AM/FM
107.1	FULL SIZE SPARE TIRE AND WHEEL WITH LOCKABLE CARRIER
128	TRANSMISSION, AUTOMATIC
132.1	OIL COOLER, TRANSMISSION
144	WIPERS, INTERMITTENT
200.1	HUB CAPS, OEM STANDARD
241	ANTILOCK BRAKING SYSTEM (OEM STANDARD)
253	CARGO AREA LIGHT

OPTIONAL EQUIPMENT:

OPT. NO.	DESCRIPTION
37.4	COLOR: YELLOW FED STD 595B NO. 13507 (QTY: 1-4) (SAP NO. 10024186)
37.5	COLOR: YELLOW FED STD 595B NO. 13507 (QTY: 5 OR MORE) (SAP NO. 10024188)
45	LIMITED SLIP DIFFERENTIAL (SAP NO. 10024190)

OPTIONAL EQUIPMENT:

OPT. NO.	DESCRIPTION
111A	SPOTLIGHT, LEFT SIDE (SAP NO. 10024192)
122.1	TOOL BOX, STEEL, FRONT, SINGLE LID (SAP NO. 10024193)
123.1	TOOL BOX, ALUMINUM, FRONT, SINGLE LID (SAP NO. 10024196)
213.1	FACTORY INSTALLED TRAILER TOWING PACKAGE WITH RECEIVER HITCH (SAP NO. 10024201)
214	LIFT GATE (SAP NO. 10024203)
216	PICKUP BED AND TAILGATE LINER (SAP NO. 10024205)
217	SPRAY IN PICKUP BED AND TAILGATE LINER RHINO TUFF-STUFF OR LINE-X (SAP NO. 10024206)
223	DIFFERENTIAL RATIO (SAP NO. 10024207)
224.4	STROBE LIGHT, MOUNTED ON ROOF, LOW PROFILE (SAP NO. 10024208)
224.8	LIGHTBAR MINIFREEDOM WHELEN MODEL FT8AAAAP (SAP NO. 10024209)
243	COMBINATION HITCH, BUYERS PRODUCTS NO. BH82000 WITH PM87 HITCH MOUNT AND HP6253 WC HITCH PIN. TWO-BUYERS PRODUCT B40 LASHING WELDED ON TOP OF BUMPER. (IF ORDERING THIS OPTION, DEPARTMENT MUST ORDER OPTION 213 OR 213.1) (SAP NO. 10024210)
243.1	REPLACEMENT BALL BUYERS PRODUCT NO. RB2516 (SAP NO. 10024212)
249	HOUR METER (SAP NO. 10024215)
251	ELECTRIC BRAKE CONTROLLER (SAP NO. 10024216)
264	HEADACHE RACK (SAP NO. 10030178)

ITEM NO.	DESCRIPTION

34 SERIES 880D-LEV PICKUP, 6-PASSENGER CREW CAB, SHORT BED, SINGLE REAR WHEEL, DIESEL ENGINE, MUST MEET OR EXCEED THE FEDERAL LEV CERTIFICATION AND INCLUDE THE FOLLOWING STANDARD EQUIPMENT.
(SAP NO. 10036546)

MANUFACTURER	**FORD**	**CHEVROLET**
MODEL	F350SD-DIESEL	C3500HD CC30743-DIESEL

SPECIFICATION	**MINIMUM REQUIREMENTS**
WHEEL BASE (INCHES)	153
OVERALL LENGTH (INCHES)	240
BOX LENGTH (INCHES)	78
GVWR (POUNDS)	10800
APPROX. PAYLOAD (POUNDS)	3410
ENGINE DISPLACEMENT (LITERS)	6.6L DIESEL
ENGINE HP	335
ENGINE TORQUE	685
TIRE/RIM SIZE	MFG. STANDARD

STANDARD

EQUIP. NO	DESCRIPTION
1	AIR CONDITIONING (INCLUDES OPT 87)
29.1	BUMPER, O.E.M. STANDARD
37.1	COLORS, SOLID (OEM STANDARD)
59.1	FUEL TANK(S), 30 GALLON CAPACITY
72	MIRRORS, EXTENDABLE MANUALLY
77	STEERING, POWER
91	RADIO, AM/FM
107.1	FULL SIZE SPARE TIRE AND WHEEL WITH LOCKABLE CARRIER
128	TRANSMISSION, AUTOMATIC
132.1	OIL COOLER, TRANSMISSION
144	WIPERS, INTERMITTENT
200.1	HUB CAPS, OEM STANDARD
241	ANTILOCK BRAKING SYSTEM (OEM STANDARD)
253	CARGO AREA LIGHT

OPTIONAL EQUIPMENT:

OPT. NO.	DESCRIPTION
17	DUAL ALTERNATORS SAP NO. (10036548)
52	FOUR WHEEL DRIVE (SAP NO. 10036547)
53	ELECTRIC SHIFT F/4-WHEEL DRIVE SAP NO. (10036551)
72	MIRRORS, EXTERIOR TRAILER-TOW TYPE, MANUAL
209	POWER LOCKS/WINDOWS (SAP NO. 10036552)

SERIES 880D-LEV CONTINUED

OPTIONAL EQUIPMENT:

OPT. NO.	DESCRIPTION
210.1	SEAT, 40/40 W/CONSOLE SAP NO. (10036553)
212.1	SUSPENSION, HEAVY DUTY SAP NO. (10036561)
213.1	FACTORY INSTALLED TRAILER TOWING PACKAGE WITH RECEIVER HITCH (SAP NO. 10036560)
251	ELECTRIC BRAKE CONTROLLER (SAP NO. 10036554)

ITEM NO.	DESCRIPTION

35 SERIES 881C-LEV PICKUP, 6-PASSENGER CREW CAB, LONG BED, SINGLE REAR WHEEL, 8-CYLINDER GASOLINE, MUST MEET OR EXCEED THE FEDERAL LEV CERTIFICATION AND INCLUDE THE FOLLOWING STANDARD EQUIPMENT.
(SAP NO. 10013273)

MANUFACTURER	**FORD**	**CHEVROLET**
MODEL	F350SD-CREW CAB	C3500HD-CC30943

SPECIFICATION	**MINIMUM REQUIREMENTS**
WHEEL BASE (INCHES)	167
OVERALL LENGTH (INCHES)	259
BOX LENGTH (INCHES)	96
GVWR (POUNDS)	10,200
APPROX. PAYLOAD (POUNDS)	3600
ENGINE DISPLACEMENT (LITERS)	6.0L-V8
ENGINE HP	316
ENGINE TORQUE	380
TIRE/RIM SIZE	MFG. STANDARD

STANDARD

EQUIP. NO	DESCRIPTION
1	AIR CONDITIONING (INCLUDES OPT 87)
29.1	BUMPER, O.E.M. STANDARD
37.1	COLORS, SOLID (OEM STANDARD)
59.1	FUEL TANK(S), 30 GALLON CAPACITY
72	MIRRORS, EXTENDABLE MANUALLY
77	STEERING, POWER
91	RADIO, AM/FM
107.1	FULL SIZE SPARE TIRE AND WHEEL WITH LOCKABLE CARRIER
128	TRANSMISSION, AUTOMATIC
132.1	OIL COOLER, TRANSMISSION
144	WIPERS, INTERMITTENT
200.1	HUB CAPS, OEM STANDARD
241	ANTILOCK BRAKING SYSTEM (OEM STANDARD)
253	CARGO AREA LIGHT

OPTIONAL EQUIPMENT:

OPT. NO.	DESCRIPTION

37.4 COLOR: YELLOW FED STD 595B NO. 13507 (QTY: 1-4)
(SAP NO. 10013280)

37.5 COLOR: YELLOW FED STD 595B NO. 13507 (QTY: 5 OR MORE)
(SAP NO. 10024219)

45 LIMITED SLIP DIFFERENTIAL
(SAP NO. 10013275)

49 ENGINE, LARGER DISPLACEMENT
(SAP NO. 10024222)

111A SPOTLIGHT, LEFT SIDE
(SAP NO. 10013276)

SERIES 881C-LEV CONTINUED

OPTIONAL EQUIPMENT:

OPT. NO.	DESCRIPTION
122.1	TOOL BOX, STEEL, FRONT, SINGLE LID (SAP NO. 10024224)
123.1	TOOL BOX, ALUMINUM, FRONT, SINGLE LID (SAP NO. 10024226)
123.5	TOOL BOX, ALUMINUM, FRONT LOW PROFILE (SAP NO. 10031605)
213.1	FACTORY INSTALLED TRAILER TOWING PACKAGE WITH RECEIVER HITCH (SAP NO. 10013274)
214	LIFT GATE (SAP NO. 10024228)
216	PICKUP BED AND TAILGATE LINER (SAP NO. 10024233)
217	SPRAY IN PICKUP BED AND TAILGATE LINER RHINO TUFF-STUFF OR LINE-X
224.4	STROBE LIGHT, MOUNTED ON ROOF, LOW PROFILE (SAP NO. 10024236)
224.5	ROOF-MOUNTED SPOTLIGHT (SAP NO. 10013277)
224.6	DUAL, ROOF-MOUNTED SPOTLIGHTS (SAP NO. 10024238)
224.8	LIGHTBAR MINIFREEDOM WHELEN MODEL FT8AAAAP (SAP NO. 10013279)
243	COMBINATION HITCH, BUYERS PRODUCTS NO. BH82000 WITH PM87 HITCH MOUNT AND HP6253 WC HITCH PIN. TWO-BUYERS PRODUCT B40 LASHING WELDED ON TOP OF BUMPER. (IF ORDERING THIS OPTION, DEPARTMENT MUST ORDER OPTION 213 OR 213.1) (SAP NO. 10024240)
243.1	REPLACEMENT BALL BUYERS PRODUCT NO. RB2516 (SAP NO. 10024242)
249	HOUR METER (SAP NO. 10030481)
251	ELECTRIC BRAKE CONTROLLER (SAP NO. 10024244)
256	INVERTER 1400 WATTS, 20 AMPS (SAP NO. 10024245)
264	HEADACHE RACK (SAP NO. 10024247)

ITEM NO.	DESCRIPTION

36 SERIES 881D-LEV PICKUP, SIX PASSENGER CREW CAB, LONG BED, SINGLE REAR WHEEL, DIESEL ENGINE, MUST MEET OR EXCEED THE FEDERAL LEV CERTIFICATION AND INCLUDE THE FOLLOWING STANDARD EQUIPMENT.
(SAP NO. 10013255)

MANUFACTURER	**FORD**	**CHEVROLET**
MODEL	F350SD CREW CAB-DIESEL	C3500HD-CC30943-DIESEL

SPECIFICATION	**MINIMUM REQUIREMENTS**
WHEEL BASE (INCHES)	167
OVERALL LENGTH (INCHES)	259
BOX LENGTH (INCHES)	96
GVWR (POUNDS)	9900
APPROX. PAYLOAD (POUNDS)	3100
ENGINE DISPLACEMENT (LITERS)	6.6L–V8 DIESEL
ENGINE HP	335
ENGINE TORQUE	685
TIRE/RIM SIZE	MFG. STANDARD

STANDARD

EQUIP. NO	DESCRIPTION
1	AIR CONDITIONING (INCLUDES OPT 87)
29.1	BUMPER, O.E.M. STANDARD
37.1	COLORS, SOLID (OEM STANDARD)
59.1	FUEL TANK(S), 30 GALLON CAPACITY
72	MIRRORS, EXTENDABLE MANUALLY
77	STEERING, POWER
91	RADIO, AM/FM
107.1	FULL SIZE SPARE TIRE AND WHEEL WITH LOCKABLE CARRIER
128	TRANSMISSION, AUTOMATIC
132.1	OIL COOLER, TRANSMISSION
144	WIPERS, INTERMITTENT
200.1	HUB CAPS, OEM STANDARD
241	ANTILOCK BRAKING SYSTEM (OEM STANDARD)
253	CARGO AREA LIGHT

OPTIONAL EQUIPMENT:

OPT. NO.	DESCRIPTION
37.4	COLOR: YELLOW FED STD 595B NO. 13507 (QTY: 1-4) (SAP NO. 10024171)
37.5	COLOR: YELLOW FED STD 595B NO. 13507 (QTY: 5 OR MORE) (SAP NO. 10024172)
45	LIMITED SLIP DIFFERENTIAL (SAP NO. 10024173)
111A	SPOTLIGHT (SAP NO. 10034640)

OPTIONAL EQUIPMENT:

OPT. NO.	DESCRIPTION
122.1	TOOL BOX, STEEL, FRONT, SINGLE LID (SAP NO. 10013287)
123.1	TOOL BOX, ALUMINUM, FRONT, SINGLE LID (SAP NO. 10024175)
213.1	FACTORY INSTALLED TRAILER TOWING PACKAGE WITH RECEIVER HITCH (SAP NO. 10013284)
214	LIFT GATE (SAP NO. 10024176)
216	PICKUP BED AND TAILGATE LINER (SAP NO. 10024177)
217	SPRAY IN PICKUP BED AND TAILGATE LINER RHINO TUFF-STUFF OR LINE-X (SAP NO. 10013286)
224.4	STROBE LIGHT, MOUNTED ON ROOF, LOW PROFILE (SAP NO. 10024178)
224.5	ROOF-MOUNTED SPOTLIGHT (SAP NO. 10024179)
224.6	DUAL, ROOF-MOUNTED SPOTLIGHTS (SAP NO. 10024260)
224.8	LIGHTBAR MINIFREEDOM WHELEN MODEL FT8AAAAP (SAP NO. 10024261)
243	COMBINATION HITCH, BUYERS PRODUCTS NO. BH82000 WITH PM87 HITCH MOUNT AND HP6253 WC HITCH PIN. TWO-BUYERS PRODUCT B40 LASHING WELDED ON TOP OF BUMPER. (IF ORDERING THIS OPTION, DEPARTMENT MUST ORDER OPTION 213 OR 213.1) (SAP NO. 10013281)
243.1	REPLACEMENT BALL BUYERS PRODUCT NO. RB2516 (SAP NO. 10024262)
249	HOUR METER (SAP NO. 10024263)
251	ELECTRIC BRAKE CONTROLLER (SAP NO. 10024264)
264	HEADACHE RACK (SAP NO. 10030179)

ITEM NO.	DESCRIPTION

37 SERIES 886C-LEV PICKUP, SIX PASSENGER CREW CAB, LONG BED, DUAL REAR WHEELS, 8-CYLINDER, GASOLINE, MUST MEET OR EXCEED THE FEDERAL LEV CERTIFICATION AND INCLUDE THE FOLLOWING STANDARD EQUIPMENT.
(SAP NO. 10024265)

MANUFACTURER	**FORD**	**CHEVROLET**
MODEL	F350SD-DRW CREW CAB	3500HD-DRW CREW CAB

SPECIFICATION	**MINIMUM REQUIREMENTS**
WHEEL BASE (INCHES)	167
OVERALL LENGTH (INCHES)	259
BOX LENGTH (INCHES)	96
GVWR (POUNDS)	11,400
APPROX. PAYLOAD (POUNDS)	4900
ENGINE DISPLACEMENT (LITERS)	6.0L-V8
ENGINE HP	316
ENGINE TORQUE	380
TIRE/RIM SIZE	MFG. STANDARD

STANDARD

EQUIP. NO	DESCRIPTION
1	AIR CONDITIONING (INCLUDES OPT 87)
29.1	BUMPER, O.E.M. STANDARD
37.1	COLORS, SOLID (OEM STANDARD)
59.1	FUEL TANK(S), 30 GALLON CAPACITY
72	MIRRORS, EXTENDABLE MANUALLY
77	STEERING, POWER
91	RADIO, AM/FM
107.1	FULL SIZE SPARE TIRE AND WHEEL WITH LOCKABLE CARRIER
128	TRANSMISSION, AUTOMATIC
132.1	OIL COOLER, TRANSMISSION
144	WIPERS, INTERMITTENT
200.1	HUB CAPS, OEM STANDARD
241	ANTILOCK BRAKING SYSTEM (OEM STANDARD)
253	CARGO AREA LIGHT

OPTIONAL EQUIPMENT:

OPT. NO.	DESCRIPTION

37.4 COLOR: YELLOW FED STD 595B NO. 13507 (QTY: 1-4)
(SAP NO. 10024266)

37.5 COLOR: YELLOW FED STD 595B NO. 13507 (QTY: 5 OR MORE)
(SAP NO. 10024267)

45 LIMITED SLIP DIFFERENTIAL
(SAP NO. 10024268)

49 ENGINE, LARGER DISPLACEMENT
(SAP NO. 10024269)

72 MIRRORS, EXTERIOR TRAILER-TOW TYPE, MANUAL
(SAP NO. 10028936)

111A SPOTLIGHT
(SAP NO. 10024270)

OPTIONAL EQUIPMENT:

OPT. NO.	DESCRIPTION
122.1	TOOL BOX, STEEL, FRONT, SINGLE LID (SAP NO. 10024271)
123.1	TOOL BOX, ALUMINUM, FRONT, SINGLE LID (SAP NO. 10024272)
123.5	TOOL BOX, ALUMINUM, FRONT, LOW PROFILE (SAP NO. 10031611)
213.1	FACTORY INSTALLED TRAILER TOWING PACKAGE WITH RECEIVER HITCH (SAP NO. 10024274)
214	LIFT GATE (SAP NO. 10024275)
216	PICKUP BED AND TAILGATE LINER (SAP NO. 10024276)
217	SPRAY IN PICKUP BED AND TAILGATE LINER RHINO TUFF-STUFF OR LINE-X (SAP NO. 10024277)
223	DIFFERENTIAL RATIO (SAP NO. 10024278)
224.4	STROBE LIGHT, MOUNTED ON ROOF, LOW PROFILE (SAP NO. 10024279)
224.5	ROOF-MOUNTED SPOTLIGHT (SAP NO. 10024280)
224.6	DUAL, REMOTE CONTROL SPOTLIGHTS (SAP NO. 10024281)
224.8	LIGHTBAR MINIFREEDOM WHELEN MODEL FT8AAAAP (SAP NO. 10024282)
243	COMBINATION HITCH, BUYERS PRODUCTS NO. BH82000 WITH PM87 HITCH MOUNT AND HP6253 WC HITCH PIN. TWO-BUYERS PRODUCT B40 LASHING WELDED ON TOP OF BUMPER. (IF ORDERING THIS OPTION, DEPARTMENT MUST ORDER OPTION 213 OR 213.1) (SAP NO. 10024283)
243.1	REPLACEMENT BALL BUYERS PRODUCT NO. RB2516 (SAP NO. 10024284)
251	ELECTRIC BRAKE CONTROLLER (SAP NO. 10024334)
249	HOUR METER (SAP NO. 10030565)
256	INVERTER 1400 WATTS, 20 AMPS (SAP NO. 10024254)
264	HEADACHE RACK (SAP NO. 10030180)

ITEM NO.	DESCRIPTION

38 SERIES 886D-LEV PICKUP, SIX PASSENGER CREW CAB, LONG BED, DUAL REAR WHEELS, DIESEL ENGINE, MUST MEET OR EXCEED THE FEDERAL LEV CERTIFICATION AND INCLUDE THE FOLLOWING STANDARD EQUIPMENT.
(SAP NO. 10024255)

MANUFACTURER	**FORD**	**CHEVROLET**
MODEL	F350SD-DIESEL	CC3500HD-CC30943-DIESEL

SPECIFICATION	**MINIMUM REQUIREMENTS**
WHEEL BASE (INCHES)	167
OVERALL LENGTH (INCHES)	259
BOX LENGTH (INCHES)	96
GVWR (POUNDS)	11,400
APPROX. PAYLOAD (POUNDS)	4900
ENGINE DISPLACEMENT (LITERS)	6.6L-V8-DIESEL
ENGINE HP	335
ENGINE TORQUE	685
TIRE/RIM SIZE	MFG. STANDARD

STANDARD EQUIP. NO	DESCRIPTION
1	AIR CONDITIONING (INCLUDES OPT 87)
29.1	BUMPER, O.E.M. STANDARD
37.1	COLORS, SOLID (OEM STANDARD)
59.1	FUEL TANK(S), 30 GALLON CAPACITY
72	MIRRORS, EXTENDABLE MANUALLY
77	STEERING, POWER
91	RADIO, AM/FM
107.1	FULL SIZE SPARE TIRE AND WHEEL WITH LOCKABLE CARRIER
128	TRANSMISSION, AUTOMATIC
132.1	OIL COOLER, TRANSMISSION
144	WIPERS, INTERMITTENT
200.1	HUB CAPS, OEM STANDARD
241	ANTILOCK BRAKING SYSTEM (OEM STANDARD)
253	CARGO AREA LIGHT

OPTIONAL EQUIPMENT:

OPT. NO.	DESCRIPTION

37.4 COLOR: YELLOW FED STD 595B NO. 13507 (QTY: 1-4)
(SAP NO. 10024256)

37.5 COLOR: YELLOW FED STD 595B NO. 13507 (QTY: 5 OR MORE)
(SAP NO. 10024257)

45 LIMITED SLIP DIFFERENTIAL
(SAP NO. 10024258)

111A SPOTLIGHT, LEFT SIDE
(SAP NO. 10024290)

122.1 TOOL BOX, STEEL, FRONT, SINGLE LID
(SAP NO. 10024291)

123.1 TOOL BOX, ALUMINUM, FRONT, SINGLE LID
(SAP NO. 10024292)

OPTIONAL EQUIPMENT:

OPT. NO.	DESCRIPTION
123.5	TOOL BOX, ALUMINUM, FRONT, SINGLE LID, LOW PROFILE (SAP NO. 10031606)
209	POWER DOOR LOCKS AND WINDOWS (SAP NO. 10036151)
213.1	FACTORY INSTALLED TRAILER TOWING PACKAGE WITH RECEIVER HITCH (SAP NO. 10024294)
213.4	TOWING PACKAGE, GOOSENECK (SAP NO. 10036150)
214	LIFT GATE (SAP NO. 10024295)
216	PICKUP BED AND TAILGATE LINER (SAP NO. 10024296)
217	SPRAY IN PICKUP BED AND TAILGATE LINER RHINO TUFF-STUFF OR LINE-X (SAP NO. 10024297)
223	DIFFERENTIAL RATIO (SAP NO. 10024298)
224.4	STROBE LIGHT, MOUNTED ON ROOF, LOW PROFILE (SAP NO. 10024299)
224.8	LIGHTBAR MINIFREEDOM WHELEN MODEL FT8AAAAP (SAP NO. 10024300)
243	COMBINATION HITCH, BUYERS PRODUCTS NO. BH82000 WITH PM87 HITCH MOUNT AND HP6253 WC HITCH PIN. TWO-BUYERS PRODUCT B40 LASHING WELDED ON TOP OF BUMPER. (IF ORDERING THIS OPTION, DEPARTMENT MUST ORDER OPTION 213 OR 213.1) (SAP NO. 10024301)
243.1	REPLACEMENT BALL BUYERS PRODUCT NO. RB2516 (SAP NO. 10024302)
249	HOUR METER (SAP NO. 10024303)
251	ELECTRIC BRAKE CONTROLLER (SAP NO. 10024304)
264	HEADACHE RACK (SAP NO. 10030181)

ITEM NO.	DESCRIPTION

39 **SERIES 870C-LEV CAB & CHASSIS**, REGULAR CAB, 3/4-TON, 56 INCH CA, SINGLE REAR WHEEL, GASOLINE, MUST MEET OR EXCEED THE FEDERAL LEV CERTIFICATION, INCLUDING THE FOLLOWING STANDARD EQUIPMENT (SAP MATERIAL NO. 10013297)

MANUFACTURER	**FORD**	**CHEVROLET**	**DODGE**
MODEL	F250 SD	C2500HD-CC20903	DR2L62

SPECIFICATION	**MINIMUM REQUIREMENTS**
WHEEL BASE (INCHES)	133
CAB TO AXLE (INCHES)	56
APPROX. PAYLOAD (POUNDS)	3,000
GVWR (POUNDS)	8,800
ENGINE DISPLACEMENT (LITERS)	5.7 L V-8
ENGINE NET HP	300
ENGINE TORQ	365
TIRE & RIM SIZE	MFG. STANDARD

STANDARD EQUIP. NO	DESCRIPTION
1	AIR CONDITIONING INCLUDES OPT. 87
37.1	SOLID COLORS, O.E.M. STANDARD
59.1	FUEL TANK(S), 30 GALLON CAPACITY
72	MIRRORS, MANUALLY EXTENDABLE
77	STEERING, POWER
91	RADIO, AM/FM
128	TRANSMISSION, AUTOMATIC
132.1	TRANSMISSION COOLER
144	WIPERS, INTERMITTENT TYPE
213.2	TRAILER TOWING PACKAGE
241	ANTILOCK BRAKING SYSTEM (OEM STANDARD)

OPTIONAL EQUIPMENT FOR SERIES 870C CAB & CHASSIS

OPT. NO.	DESCRIPTION

37.4 COLOR: YELLOW: FEDERAL STANDARD 595B, COLOR NO. 13507 (QTY: 1-4) (SAP MATERIAL NO. 10013304)

37.5 COLOR: YELLOW: FEDERAL STANDARD 595B, COLOR NO. 13507 (QTY: 5 OR MORE) (SAP MATERIAL NO. 10024884)

OPTIONAL EQUIPMENT FOR SERIES 870C CAB & CHASSIS (CONTINUED)

OPT. NO.	DESCRIPTION
107.1	SPARE TIRE, CARRIER AND WHEEL MOUNTED UNDER CAB & CHASSIS (SAP MATERIAL NO. 10013299)
111A	SPOTLIGHT, LEFT SIDE (SAP MATERIAL NO. 10024885)
224.4	STROBE LIGHT, LOW PROFILE (SAP MATERIAL NO. 10013302)
224.5	ROOF-MOUNTED SPOTLIGHT (SAP MATERIAL NO. 10013300)
224.8	LIGHTBAR, MINIFREEDOM, WHELEN MODEL FT8AAAAP (SAP MATERIAL NO. 10013303)

OPTIONAL EQUIPMENT FOR SERIES 870C CAB & CHASSIS (CONTINUED)

OPTION NO.	DESCRIPTION
A	**SERIES 2001 SERVICE BODY**, TIP-TOP OR OPENING-TOP TYPE, 96-INCH LENGTH FOR A 56 OR 57 INCH CAB TO AXLE, SINGLE-REAR WHEEL CAB & CHASSIS, INCLUDING THE FOLLOWING STANDARD EUIPMENT (SAP MATERIAL NO. 10012919)

STANDARD EQUIP. NO	DESCRIPTION
2.17	LOCKING WATER COOLER
2.18	TAILGATE, OEM STANDARD
2.26	CLEARANCE LIGHTS
------	ONE (1) FULL LENGTH TRAY PER SIDE
------	TWO (2) VERTICAL COMPARTMENTS ON EACH SIDE
------	ONE (1) HORIZONTAL COMPARTMENT OVER WHEEL WELL ON EACH SIDE

APPROVED BRANDS
RKI MODEL T5680/T5780 (Dodge)
READING MODEL S98ASW
KNAPHEIDE 696FJ40
OMAHA STANDARD 96VT
STAHL CST98VVSLT

OPTIONAL EQUIPMENT FOR SERIES 2001 SERVICE BODY:

OPT. NO.	DESCRIPTION
2.1	OVERHEAD LADDER RACKS (SAP MATERIAL NO. 10024886)
2.3	LADDER RACK WITH CONDUIT CARRIER (SAP NO. 10012925)
2.5	VISE RACK WITH PIPE HANGER (SAP MATERIAL NO. 10024887)
2.6	TELESCOPING TOP WITH TAILGATE ENCLOSURE (SAP MATERIAL NO. 10012930)
2.7	REAR BUMPER, MANUFACTURER'S STANDARD 8" WITH TREADPLATE (SAP MATERIAL NO. 10024888)
2.8	REAR BUMPER, MANUFACTURER'S STANDARD 8" WITH "GRIP STRUT (SAP MATERIAL NO. 10024889)
2.9	REAR BUMPER, MANUFACTURER'S STANDARD 12" WITH TREADPLATE (SAP MATERIAL NO. 10024930)
2.10	REAR BUMPER, MANUFACTURER'S STANDARD 12" WITH "GRIP STRUT (SAP MATERIAL NO. 10024931)

OPTIONAL EQUIPMENT SERIES 2001 SERVICE BODY (CONTINUED):

OPT. NO.	DESCRIPTION
2.11	CENTRAL LOCKING SYSTEM (SAP MATERIAL NO. 10024932)
2.12	TREADPLATE, 3/16” FOR FLOOR (SAP MATERIAL NO. 10024933)
2.13	ANTI-SLIP COVERING FOR FLOOR (SAP MATERIAL NO. 10024934)
2.14	16 GAUGE TREADPLATE OVERLAY INSIDE OF BODY (SAP MATERIAL NO. 10024935)
2.19	SIX-WAY CONNECTOR MOUNTED (SAP MATERIAL NO. 10012927)
2.21	CARGO AREA FLOOR MAT, RUBBER (SAP MATERIAL NO. 10012920)
2.22	HEADACHE RACK (SAP MATERIAL NO. 10024950)
2.24	CRANE, 2000-LB LIFTING CAPACITY (SAP MATERIAL NO. 10036983)
2.25	THREE-DRAWER STORAGE MODULE (SAP MATERIAL NO. 10012931)
2.28	LIFTGATE (SAP MATERIAL NO. 10036968)

OPTIONAL EQUIPMENT FOR SERIES 870C CAB & CHASSIS (CONTINUED)

OPTION NO.	DESCRIPTION
B	**SERIES 2002 SERVICE BODY**, SO LOW OR LOW PROFILE TYPE, 96-INCH LENGTH TO FIT A SINGLE REAR 56 OR 57 INCH CAB TO AXLE WHEEL CAB & CHASSIS, INCLUDING THE FOLLOWING STANDARD EQUIPMENT (SAP MATERIAL NO. 10012933)

STANDARD EQUIP. NO	DESCRIPTION
2.17	LOCKING WATER COOLER
2.18	TAILGATE, OEM STANDARD
2.26	CLEARANCE LIGHTS TWO (2) VERTICAL COMPARTMENTS ON EACH SIDE ONE (1) HORIZONTAL COMPARTMENT OVER WHEEL WELL ON EACH SIDE

APPROVED BRANDS
RKI MODEL L5680/L5780 (Dodge)
READING MODEL LP98ASW
KNAPHEIDE 696LPJ
OMAHA STANDARD 96LPV
STAHL CST98VVSL

OPTIONAL EQUIPMENT FOR SERIES 2002 SERVICE BODY:

OPT. NO.	DESCRIPTION
2.1	OVERHEAD LADDER RACKS (SAP MATERIAL NO. 10012939)
2.2	SIDE MOUNTED LADDER RACKS (SAP MATERIAL NO. 10024936)
2.3	LADDER RACK WITH CONDUIT CARRIER (SAP MATERIAL NO. 10024937)
2.5	VISE RACK WITH PIPE HANGER (SAP MATERIAL NO. 10012942)
2.6	TELESCOPING TOP WITH TAILGATE ENCLOSURE (SAP MATERIAL NO. 10012941)
2.7	REAR BUMPER, MANUFACTURER'S STANDARD 8" WITH TREADPLATE (SAP MATERIAL NO. 10024951)
2.8	REAR BUMPER, MANUFACTURER'S STANDARD 8" WITH "GRIP STRUT (SAP MATERIAL NO. 10012937)
2.9	REAR BUMPER, MANUFACTURER'S STANDARD 12" WITH TREADPLATE (SAP MATERIAL NO. 10024938)
2.10	REAR BUMPER, MANUFACTURER'S STANDARD 12" WITH "GRIP STRUT (SAP MATERIAL NO. 10012938)

OPTIONAL EQUIPMENT FOR SERIES 2002 SERVICE BODY (CONTINUED):

OPT. NO.	DESCRIPTION
2.11	CENTRAL LOCKING SYSTEM (SAP MATERIAL NO. 10012935)
2.12	TREADPLATE, 3/16” FOR FLOOR (SAP MATERIAL NO. 10024939)
2.13	ANTI-SLIP COVERING FOR FLOOR (SAP MATERIAL NO. 10024940)
2.14	16 GAUGE TREADPLATE OVERLAY INSIDE OF BODY (SAP MATERIAL NO. 10024941)
2.15	16 GAUGE TREADPLATE OVERLAY TOP OF BODY (SAP MATERIAL NO. 10024942)
2.16	ANTI-SLIP COVERING FOR OPTION 2.15 (SAP MATERIAL NO. 10024943)
2.19	SIX-WAY CONNECTOR MOUNTED (SAP MATERIAL NO. 10024944)
2.21	CARGO AREA FLOOR MAT, RUBBER (SAP MATERIAL NO. 10012934)
2.22	HEADACHE RACK (SAP MATERIAL NO. 10012936)
2.25	THREE-DRAWER STORAGE MODULE (SAP MATERIAL NO. 10012951)

OPTIONAL EQUIPMENT FOR SERIES 870C CAB & CHASSIS (CONTINUED)

OPTION NO.	DESCRIPTION
C	**SERIES 2003 SERVICE BODY**, REGULAR OR STANDARD TYPE, 96-INCH LENGTH TO FIT A 56 OR 57 INCH CAB TO AXLE, SINGLE REAR WHEEL CAB & CHASSIS, INCLUDING THE FOLLOWING STANDARD EQUIPMENT (SAP MATERIAL NO. 10012953)

STANDARD EQUIP. NO	DESCRIPTION
2.17	LOCKING WATER COOLER
2.18	TAILGATE, OEM STANDARD
2.26	CLEARANCE LIGHTS ONE (1) FULL VERTICAL COMPARTMENT AT FRONT OF BODY ON EACH SIDE ONE-HALF (1/2) VERTICAL COMPARTMENT AT BOTTOM OF BODY ON EACH SIDE ONE (1) LONG HORIZONTAL COMPARTMENT TO EXTEND FROM FRONT COMPARTMENT TO REAR OF BODY ON EACH SIDE APPROVED BRANDS RKI MODEL L562280/L572280 (Dodge) READING MODEL 98BSW KNAPHEIDE 596J OMAHA STANDARD 96H STAHL CST98CCS

OPTIONAL EQUIPMENT FOR SERIES 2003 SERVICE BODY:

OPT. NO.	DESCRIPTION
2.1	OVERHEAD LADDER RACKS (SAP MATERIAL NO. 10024945)
2.2	SIDE MOUNTED LADDER RACKS (SAP MATERIAL NO. 10024946)
2.3	LADDER RACK WITH CONDUIT CARRIER (SAP MATERIAL NO. 10024947)
2.5	VISE RACK WITH PIPE HANGER (SAP MATERIAL NO. 10012957)
2.6	TELESCOPING TOP WITH TAILGATE ENCLOSURE (SAP MATERIAL NO. 10024948)
2.7	REAR BUMPER, MANUFACTURER'S STANDARD 8" WITH TREADPLATE (SAP MATERIAL NO. 10012956)
2.8	REAR BUMPER, MANUFACTURER'S STANDARD 8" WITH "GRIP STRUT" (SAP MATERIAL NO. 10024949)
2.9	REAR BUMPER, MANUFACTURER'S STANDARD 12" WITH TREADPLATE (SAP MATERIAL NO. 10024953)
2.10	REAR BUMPER, MANUFACTURER'S STANDARD 12" WITH "GRIP STRUT (SAP MATERIAL NO. 10024952)

OPTIONAL EQUIPMENT SERIES 2003 SERVICE BODY (CONTINUED):

OPT. NO.	DESCRIPTION
2.11	CENTRAL LOCKING SYSTEM (SAP MATERIAL NO. 10012954)
2.12	TREADPLATE, 3/16” FOR FLOOR (SAP MATERIAL NO. 10024954)
2.13	ANTI-SLIP COVERING FOR FLOOR (SAP MATERIAL NO. 10024955)
2.14	16 GAUGE TREADPLATE OVERLAY INSIDE OF BODY (SAP MATERIAL NO. 10024956)
2.15	OPTIONAL TREADPLATE OVERLAY OF TOP OF BODY PANEL, 16 GAUGE (SAP MATERIAL NO. 10024957)
2.16	ANTI-SLIP COVERING FOR OPTION 2.15 (SAP MATERIAL NO. 10024958)
2.19	SIX-WAY CONNECTOR MOUNTED (SAP MATERIAL NO. 10024959)
2.21	CARGO AREA FLOOR MAT, RUBBER (SAP MATERIAL NO. 10024961)
2.22	HEADACHE RACK (SAP MATERIAL NO. 10024962)
2.25	THREE-DRAWER STORAGE MODULE (SAP MATERIAL NO. 10024963)

ITEM NO.	DESCRIPTION
40	**SERIES 870DLEV CAB & CHASSIS**, REGULAR CAB, 3/4-TON, 56 INCH CA, SINGLE REAR WHEEL, DIESEL, MUST MEET OR EXCEED THE FEDERAL LEV CERTIFICATION, INCLUDING THE FOLLOWING STANDARD EQUIPMENT (SAP MATERIAL NO. 10013288)

MANUFACTURER	**FORD**	**CHEVROLET**	**DODGE**
MODEL	F250SD	C2500HD-CC20903	DR2L62

SPECIFICATION	**MINIMUM REQUIREMENTS**
WHEEL BASE (INCHES)	133
CAB TO AXLE (INCHES)	56
APPROX. PAYLOAD (POUNDS)	3,200
GVWR (POUNDS)	8,600
ENGINE DISPLACEMENT (LITERS)	6.6L V8 DIESEL
ENGINE NET HP	335
ENGINE TORQ	685
TIRE SIZE & LOAD RANGE	MFG. STANDARD
RIM SIZE (INCHES)	MFG. STANDARD

STANDARD EQUIP. NO	DESCRIPTION
1	AIR CONDITIONING INCLUDES OPT. 87
37.1	SOLID COLORS, O.E.M. STANDARD
59.1	FUEL TANK(S), 30 GALLON CAPACITY
72	MIRRORS, MANUALLY EXTENDABLE
77	STEERING, POWER
91	RADIO, AM/FM
128	TRANSMISSION, AUTOMATIC
132.1	TRANSMISSION COOLER
144	WIPERS, INTERMITTENT TYPE
213.2	TRAILER TOWING PACKAGE
241	ANTILOCK BRAKING SYSTEM (OEM STANDARD)

OPTIONAL EQUIPMENT FOR SERIES 870D CAB & CHASSIS:

OPT. NO.	DESCRIPTION
37.4	COLOR: YELLOW: FEDERAL STANDARD 595B, COLOR NO. 13507 (QTY: 1-4) (SAP MATERIAL NO. 10013296)
37.5	COLOR: YELLOW: FEDERAL STANDARD 595B, COLOR NO. 13507 (QTY: 5 OR MORE) (SAP MATERIAL NO. 10024964)

OPTIONAL EQUIPMENT FOR SERIES 870D CAB & CHASSIS (CONTINUED)

OPT. NO.	DESCRIPTION
107.1	SPARE TIRE, CARRIER AND WHEEL MOUNTED UNDER CAB & CHASSIS (SAP MATERIAL NO. 10024965)
224.4	STROBE LIGHT, LOW PROFILE (SAP MATERIAL NO. 10013294)
224.6	ROOF-MOUNTED SPOTLIGHTS, DUAL (2) (SAP MATERIAL NO. 10013293)
224.8	LIGHTBAR, MINIFREEDOM, WHELEN MODEL FT8AAAP (SAP MATERIAL NO. 10013295)
240	ELECTRONIC ENGINE SPEED CONTROL (SAP MATERIAL NO. 10013289)
249	HOUR METER (SAP MATERIAL NO. 10013291)

OPTIONAL EQUIPMENT FOR SERIES 870D CAB & CHASSIS (CONTINUED)

OPTION NO.	DESCRIPTION

A **SERIES 2001 SERVICE BODY**, TIPTOP OR OPENING-TOP TYPE, 96 INCHES TO FIT A 56 OR 57 INCH CAB TO AXLE, SINGLE-REAR WHEEL CAB & CHASSIS, INCLUDING THE FOLLOWING STANDARD EQUIPMENT
(SAP MATERIAL NO. 10025041)

STANDARD EQUIP. NO	DESCRIPTION
2.17	LOCKING WATER COOLER
2.18	TAILGATE, OEM STANDARD
2.26	CLEARANCE LIGHTS ONE (1) FULL LENGTH TRAY PER SIDE TWO (2) VERTICAL COMPARTMENTS ON EACH SIDE ONE (1) HORIZONTAL COMPARTMENT OVER WHEEL WELL ON EACH SIDE APPROVED BRANDS RKI MODEL T5680/T5780 (Dodge) READING MODEL S98ASW KNAPHEIDE 696FJ40 OMAHA STANDARD 96VT STAHL CST98VVSLT

OPTIONAL EQUIPMENT FOR SERIES 870D CAB & CHASSIS (CONTINUED)

OPTIONAL EQUIPMENT FOR SERIES 2001 SERVICE BODY:

OPT. NO.	DESCRIPTION
2.1	OVERHEAD LADDER RACKS (SAP MATERIAL NO. 10024966)
2.3	LADDER RACK WITH CONDUIT CARRIER (SAP MATERIAL NO. 10024967)
2.5	VISE RACK WITH PIPE HANGER (SAP MATERIAL NO. 10024968)
2.6	TELESCOPING TOP WITH TAILGATE ENCLOSURE (SAP MATERIAL NO. 10024969)
2.7	REAR BUMPER, MANUFACTURER'S STANDARD 8" WITH TREADPLATE (SAP MATERIAL NO. 10024970)
2.8	REAR BUMPER, MANUFACTURER'S STANDARD 8" WITH "GRIP STRUT (SAP MATERIAL NO. 10024971)
2.9	REAR BUMPER, MANUFACTURER'S STANDARD 12" WITH TREADPLATE (SAP MATERIAL NO. 10024972)
2.10	REAR BUMPER, MANUFACTURER'S STANDARD 12" WITH "GRIP STRUT (SAP MATERIAL NO. 10024973)

OPTIONAL EQUIPMENT FOR SERIES 870D CAB & CHASSIS (CONTINUED)

OPTIONAL EQUIPMENT FOR SERIES 2001 SERVICE BODY:

OPT. NO.	DESCRIPTION
2.11	CENTRAL LOCKING SYSTEM (SAP MATERIAL NO. 10024974)
2.12	TREADPLATE, 3/16” FOR FLOOR (SAP MATERIAL NO. 10024975)
2.13	ANTI-SLIP COVERING FOR FLOOR (SAP MATERIAL NO. 10024976)
2.14	16 GAUGE TREADPLATE OVERLAY INSIDE OF BODY (SAP MATERIAL NO. 10024917)
2.19	SIX-WAY CONNECTOR MOUNTED (SAP MATERIAL NO. 10024918)
2.21	CARGO AREA FLOOR MAT, RUBBER (SAP MATERIAL NO. 10024919)
2.22	HEADACHE RACK (SAP MATERIAL NO. 10024980)
2.25	THREE-DRAWER STORAGE MODULE (SAP MATERIAL NO. 10024981)

OPTIONAL EQUIPMENT FOR SERIES 870D CAB & CHASSIS (CONTINUED)

OPTION NO.	DESCRIPTION
B	**SERIES 2002 SERVICE BODY**, SO LOW OR LOW PROFILE TYPE, 96 INCHES TO FIT A 56 OR 57 INCH CAB TO AXLE, SINGLE REAR WHEEL CAB & CHASSIS, INCLUDING THE FOLLOWING STANDARD EQUIPMENT (SAP MATERIAL NO. 10012943)

STANDARD EQUIP. NO	DESCRIPTION
2.17	LOCKING WATER COOLER
2.18	TAILGATE, OEM STANDARD
2.26	CLEARANCE LIGHTS TWO (2) VERTICAL COMPARTMENTS ON EACH SIDE ONE (1) HORIZONTAL COMPARTMENT OVER WHEEL WELL ON EACH SIDE

APPROVED BRANDS
RKI MODEL L5680/L5780 (Dodge)
READING MODEL LP98ASW
KNAPHEIDE 696LPJ
OMAHA STANDARD 96LPV
STAHL CST98VVSL

OPTIONAL EQUIPMENT FOR SERIES 2002 SERVICE BODY:

OPT. NO.	DESCRIPTION
2.1	OVERHEAD LADDER RACKS (SAP MATERIAL NO. 10012946)
2.2	SIDE MOUNTED LADDER RACKS (SAP MATERIAL NO. 10024982)
2.3	LADDER RACK WITH CONDUIT CARRIER (SAP MATERIAL NO. 10024983)
2.5	VISE RACK WITH PIPE HANGER (SAP MATERIAL NO. 10012952)
2.6	TELESCOPING TOP WITH TAILGATE ENCLOSURE (SAP MATERIAL NO. 10012950)
2.7	REAR BUMPER, MANUFACTURER'S STANDARD 8" WITH TREADPLATE (SAP MATERIAL NO. 10024984)
2.8	REAR BUMPER, MANUFACTURER'S STANDARD 8" WITH "GRIP STRUT" (SAP MATERIAL NO. 10024985)
2.9	REAR BUMPER, MANUFACTURER'S STANDARD 12" WITH TREADPLATE (SAP MATERIAL NO. 10012947)
2.10	REAR BUMPER, MANUFACTURER'S STANDARD 12" WITH "GRIP STRUT" (SAP MATERIAL NO. 10012948)

OPTIONAL EQUIPMENT FOR SERIES 2002 SERVICE BODY (CONTINUED):

OPT. NO.	DESCRIPTION
2.11	CENTRAL LOCKING SYSTEM (SAP MATERIAL NO. 10012944)
2.12	TREADPLATE, 3/16” FOR FLOOR (SAP MATERIAL NO. 10024986)
2.13	ANTI-SLIP COVERING FOR FLOOR (SAP MATERIAL NO. 10024987)
2.14	16 GAUGE TREADPLATE OVERLAY INSIDE OF BODY (SAP MATERIAL NO. 10024988)
2.15	16 GAUGE TREADPLATE OVERLAY TOP OF BODY (SAP MATERIAL NO. 10024989)
2.16	ANTISLIP COVERING FOR OPTION 2.15 (SAP MATERIAL NO. 10024990)
2.19	SIX-WAY CONNECTOR MOUNTED (SAP MATERIAL NO. 10012949)
2.21	CARGO AREA FLOOR MAT, RUBBER (SAP MATERIAL NO. 10024991)
2.22	HEADACHE RACK (SAP MATERIAL NO. 10012945)
2.25	THREE-DRAWER STORAGE MODULE (SAP MATERIAL NO. 10012951)

OPTIONAL EQUIPMENT FOR SERIES 870D CAB & CHASSIS (CONTINUED)

OPT.	DESCRIPTION
C	**SERIES 2003 SERVICE BODY**, REGULAR OR STANDARD TYPE, 96 INCHES LONG TO FIT A 56 OR 57 INCH CAB TO AXLE, SINGLE REAR WHEEL CAB & CHASSIS, INCLUDING THE FOLLOWING STANDARD EQUIPMENT (SAP MATERIAL NO. 10012958)

STANDARD EQUIP. NO	DESCRIPTION
2.17	LOCKING WATER COOLER
2.18	TAILGATE, OEM STANDARD
2.26	CLEARANCE LIGHTS ONE (1) FULL VERTICAL COMPARTMENT AT FRONT OF BODY ON EACH SIDE ONE-HALF (1/2) VERTICAL COMPARTMENT AT BOTTOM OF BODY ON EACH SIDE ONE (1) LONG HORIZONTAL COMPARTMENT TO EXTEND FROM FRONT COMPARTMENT TO REAR OF BODY ON EACH SIDE APPROVED BRANDS RKI MODEL L562280/L572280 (Dodge) READING MODEL 98BSW KNAPHEIDE 596J OMAHA STANDARD 96H STAHL CST98CCS

OPTIONAL EQUIPMENT FOR SERIES 2003 SERVICE BODY:

OPT. NO.	DESCRIPTION
2.1	OVERHEAD LADDER RACKS (SAP MATERIAL NO. 10024992)
2.2	SIDE MOUNTED LADDER RACKS (SAP MATERIAL NO. 10024993)
2.3	LADDER RACK WITH CONDUIT CARRIER (SAP MATERIAL NO. 10012962)
2.5	VISE RACK WITH PIPE HANGER (SAP MATERIAL NO. 10012966)
2.6	TELESCOPING TOP WITH TAILGATE ENCLOSURE (SAP MATERIAL NO. 10024994)
2.7	REAR BUMPER, MANUFACTURER'S STANDARD 8" WITH TREADPLATE (SAP MATERIAL NO. 10024995)
2.8	REAR BUMPER, MANUFACTURER'S STANDARD 8" WITH "GRIP STRUT" (SAP MATERIAL NO. 10024996)

OPTIONAL EQUIPMENT FOR SERIES 2003 SERVICE BODY (CONTINUED):

OPT. NO.	DESCRIPTION
2.9	REAR BUMPER, MANUFACTURER'S STANDARD 12" WITH TREADPLATE (SAP MATERIAL NO. 10024997)
2.10	REAR BUMPER, MANUFACTURER'S STANDARD 12" WITH "GRIP STRUT" (SAP MATERIAL NO. 10012964)
2.11	CENTRAL LOCKING SYSTEM (SAP MATERIAL NO. 10012960)
2.12	TREADPLATE, 3/16" FOR FLOOR (SAP MATERIAL NO. 10024998)
2.13	ANTI-SLIP COVERING FOR FLOOR (SAP MATERIAL NO. 10012959)
2.14	16 GAUGE TREADPLATE OVERLAY INSIDE OF BODY (SAP MATERIAL NO. 10024999)
2.15	OPTIONAL TREADPLATE OVERLAY OF TOP OF BODY PANEL, 16 GAUGE (SAP MATERIAL NO. 10025010)
2.16	ANTI-SLIP COVERING FOR OPTION 2.15 (SAP MATERIAL NO. 10025011)
2.19	SIX-WAY CONNECTOR MOUNTED (SAP MATERIAL NO. 10025012)
2.21	CARGO AREA FLOOR MAT, RUBBER (SAP MATERIAL NO. 10025013)
2.22	HEADACHE RACK (SAP MATERIAL NO. 10012961)
2.25	THREE-DRAWER STORAGE MODULE (SAP MATERIAL NO. 10012965)

ITEM NO.	DESCRIPTION

41 **SERIES 873DLEV CAB & CHASSIS**, REGULAR CAB, 1-TON, 60 INCH CA, SINGLE REAR WHEEL, DIESEL, MUST MEET OR EXCEED THE FEDERAL LEV CERTIFICATION, INCLUDING THE FOLLOWING STANDARD EQUIPMENT
(SAP MATERIAL NO. 10024922)

MANUFACTURER	**FORD**
MODEL	F350 SD

SPECIFICATION	**MINIMUM REQUIREMENTS**
WHEEL BASE (INCHES)	141
CAB TO AXLE (INCHES)	60
APPROX. PAYLOAD (POUNDS)	4,485
GVWR (POUNDS)	9,900
ENGINE DISPLACEMENT (LITERS)	6.7L-V8-DIESEL
ENGINE NET HP	300
ENGINE TORQUE	660
TIRE SIZE & LOAD RANGE	MFG. STANDARD
RIM SIZE (INCHES)	MFG. STANDARD

STANDARD EQUIP. NO	DESCRIPTION
1	AIR CONDITIONING INCLUDES OPT. 87
37.1	SOLID COLORS, O.E.M. STANDARD
59.1	FUEL TANK(S), 30 GALLON CAPACITY
72	MIRRORS, MANUALLY EXTENDABLE
77	STEERING, POWER
91	RADIO, AM/FM
128	TRANSMISSION, AUTOMATIC
132.1	TRANSMISSION COOLER
144	WIPERS, INTERMITTENT TYPE
213.2	TRAILER TOWING PACKAGE
241	ANTILOCK BRAKING SYSTEM (OEM STANDARD)

OPTIONAL EQUIPMENT:

OPT. NO.	DESCRIPTION
37.4	COLOR: YELLOW: FEDERAL STANDARD 595B, COLOR NO. 13507 (QTY: 1-4) (SAP MATERIAL NO. 10024400)

OPT. NO.	DESCRIPTION
37.5	COLOR: YELLOW: FEDERAL STANDARD 595B, COLOR NO. 13507 (QTY: 5 OR MORE) (SAP MATERIAL NO. 10024401)
224.4	STROBE LIGHT, LOW PROFILE (SAP MATERIAL NO. 10024403)
224.8	LIGHTBAR, MINIFREEDOM, WHELEN MODEL FT8AAAAP (SAP MATERIAL NO. 10024404)
240	ELECTRONIC ENGINE SPEED CONTROL (SAP MATERIAL NO. 10024405)
249	HOUR METER (SAP MATERIAL NO. 10024406)

OPTIONAL EQUIPMENT FOR SERIES 873DLEV CAB & CHASSIS (CONTINUED)

OPT NO.	DESCRIPTION
A	**SERIES 2010 SERVICE BODY**, TIPTOP OR OPENING TOP TYPE, 108 INCHES TO FIT A 60 INCH CAB TO AXLE, SINGLE REAR WHEEL CAB & CHASSIS, INCLUDING THE FOLLOWING STANDARD EQUIPMENT (SAP MATERIAL NO. 10024920)

STANDARD EQUIP. NO	DESCRIPTION
2.17	LOCKING WATER COOLER
2.18	TAILGATE, OEM STANDARD
2.26	CLEARANCE LIGHTS ONE (1) FULL LENGTH TRAY PER SIDE TWO (2) VERTICAL COMPARTMENTS ON EACH SIDE ONE (1) HORIZONTAL COMPARTMENT OVER WHEEL WELL ON EACH SIDE

APPROVED BRANDS
RKI MODEL T6080
READING MODEL SLP108F
KNAPHEIDE 6108FJ
OMAHA STANDARD 108VT
STAHL CST110VVSLT

OPTIONAL EQUIPMENT FOR SERIES 2010 SERVICE BODY:

OPT. NO.	DESCRIPTION
2.1	OVERHEAD LADDER RACKS (SAP MATERIAL NO. 10024407)
2.3	LADDER RACK WITH CONDUIT CARRIER (SAP MATERIAL NO. 10024921)
2.5	VISE RACK WITH PIPE HANGER (SAP MATERIAL NO. 10024408)
2.6	TELESCOPING TOP WITH TAILGATE ENCLOSURE (SAP MATERIAL NO. 10024409)
2.7	REAR BUMPER, MANUFACTURER'S STANDARD 8" WITH TREADPLATE (SAP MATERIAL NO. 10024410)
2.8	REAR BUMPER, MANUFACTURER'S STANDARD 8" WITH "GRIP STRUT" (SAP MATERIAL NO. 10024411)
2.9	REAR BUMPER, MANUFACTURER'S STANDARD 12" WITH TREADPLATE (SAP MATERIAL NO. 10024412)
2.10	REAR BUMPER, MANUFACTURER'S STANDARD 12" WITH "GRIP STRUT" (SAP MATERIAL NO. 10024413)

OPTIONAL EQUIPMENT FOR SERIES 873DLEV CAB & CHASSIS (CONTINUED)

OPTIONAL EQUIPMENT FOR SERIES 2010 SERVICE BODY (CONTINUED):

OPT. NO.	DESCRIPTION
2.11	CENTRAL LOCKING SYSTEM (SAP MATERIAL NO. 10024414)
2.12	TREADPLATE, 3/16” FOR FLOOR (SAP MATERIAL NO. 10024415)
2.13	ANTI-SLIP COVERING FOR FLOOR (SAP MATERIAL NO. 10024416)
2.14	16 GAUGE TREADPLATE OVERLAY INSIDE OF BODY (SAP MATERIAL NO. 10024417)
2.19	SIX-WAY CONNECTOR MOUNTED (SAP MATERIAL NO. 10024418)
2.21	CARGO AREA FLOOR MAT, RUBBER (SAP MATERIAL NO. 10024419)
2.22	HEADACHE RACK (SAP MATERIAL NO. 10024420)
2.25	THREE-DRAWER STORAGE MODULE (SAP MATERIAL NO. 10024421)

ITEM NO.	DESCRIPTION
42	**SERIES 875C-LEV60CA CAB & CHASSIS**, REGULAR CAB, 1-TON, 60-INCH CA, DUAL REAR WHEELS, GASOLINE, MUST MEET OR EXCEED THE FEDERAL LEV CERTIFICATION, INCLUDING THE FOLLOWING STANDARD EQUIPMENT (SAP MATERIAL NO. 10013307)

MANUFACTURER	**FORD**	**CHEVROLET**
MODEL	F350 SD	C3500HD-CC31003

SPECIFICATION	**MINIMUM REQUIREMENTS**
WHEEL BASE (INCHES)	137
CAB TO AXLE (INCHES)	60
APPROX. PAYLOAD (POUNDS)	7400
GVWR (POUNDS)	13,000
ENGINE DISPLACEMENT (LITERS)	6.0L
ENGINE NET HP	316
ENGINE TORQUE	380
TIRE SIZE & LOAD RANGE	MFG. STANDARD
RIM SIZE (INCHES)	MFG. STANDARD

STANDARD EQUIP. NO	DESCRIPTION
1	AIR CONDITIONING INCLUDES OPT. 87
37.1	SOLID COLORS, O.E.M. STANDARD
59.1	FUEL TANK(S), 30 GALLON CAPACITY
72	MIRRORS, MANUALLY EXTENDABLE
77	STEERING, POWER
91	RADIO, AM/FM
107.1	SPARE TIRE AND WHEEL WITH LOCKABLE CARRIER
128	TRANSMISSION, AUTOMATIC
132.1	TRANSMISSION COOLER
144	WIPERS, INTERMITTENT TYPE
213.2	TRAILER TOWING PACKAGE
241	ANTILOCK BRAKING SYSTEM (OEM STANDARD)
253	CARGO AREA LIGHT

OPTIONAL EQUIPMENT:

OPT. NO.	DESCRIPTION
37.4	COLOR: YELLOW: FEDERAL STANDARD 595B, COLOR NO. 13507 (QTY: 1-4) (SAP MATERIAL NO. 10024837)
37.5	COLOR: YELLOW: FEDERAL STANDARD 595B, COLOR NO. 13507 (QTY: 5 OR MORE) (SAP MATERIAL NO. 10024423)

OPT. NO.	DESCRIPTION
45	LIMITED SLIP DIFFERENTIAL (SAP MATERIAL NO. 10013312)
52	FOUR-WHEEL DRIVE (SAP MATERIAL NO. 10030960)
111A	SPOTLIGHT, LEFT SIDE (SAP MATERIAL NO. 10024424)
111.1	DUAL SPOTLIGHTS, LEFT AND RIGHT SIDES (SAP MATERIAL NO. 10024425)
136.1	EXTENDED WARRANTY (SAP MATERIAL NO. 10024426)
223	DIFFERENTIAL RATIO: NORMAL/ OPTIONAL RATIO(S) (SAP MATERIAL NO. 10013308)
224.4	STROBE LIGHT, LOW PROFILE (SAP MATERIAL NO. 10013315)
224.5	ROOF-MOUNTED SPOTLIGHT (SAP MATERIAL NO. 10013314)
224.6	ROOF-MOUNTED SPOTLIGHTS, DUAL (2) (SAP MATERIAL NO. 10013313)
224.7	LIGHTBAR AND SIREN PACKAGE WHELEN MODEL FREEDOM LED (SAP MATERIAL NO. 10013311)
224.8	LIGHTBAR, MINIFREEDOM, WHELEN MODEL FT8AAAAP (SAP MATERIAL NO. 10013316)
251	ELECTRIC BRAKE CONTROLLER (SAP MATERIAL NO. 10013309)

OPTIONAL EQUIPMENT FOR SERIES 875CLEV60CA CAB AND CHASSIS (CONTINUED)

OPTION NO.	DESCRIPTION
A	**SERIES 2005 SERVICE BODY**, REGULAR OR STANDARD TYPE, 108 INCHES LONG TO FIT A 60 INCH CAB TO AXLE, DUAL REAR WHEEL CAB & CHASSIS, INCLUDING THE FOLLOWING STANDARD EQUIPMENT (SAP MATERIAL NO. 10012992)

STANDARD EQUIP. NO	DESCRIPTION
2.17	LOCKING WATER COOLER
2.18	TAILGATE, OEM STANDARD
2.26	CLEARANCE LIGHTS
2.27	MUD FLAPS TWO (2) VERTICAL COMPARTMENTS ON EACH SIDE ONE (1) HORIZONTAL COMPARTMENT OVER WHEEL WELL ON EACH SIDE

APPROVED BRANDS

RKI:	L60DW89 (Chevrolet/Dodge)/ L60DW94 (Ford)
READING:	108GADW (Chevrolet)/ 108DADW (Dodge)/ 108FADW (Ford)
KNAPHEIDE:	6108DJ (Chevrolet/Dodge)/ 6108D54J (Ford)
OMAHA:	108DV (Chevrolet/Dodge)/ 108D54V (Ford)
STAHL	CST110VVD (205908) (Chevrolet) / CST110VVD (205916) (Ford/Dodge)

OPTIONAL EQUIPMENT FOR SERIES 2005 SERVICE BODY:

OPT. NO.	DESCRIPTION
2.1	OVERHEAD LADDER RACKS (SAP MATERIAL NO. 10024427)
2.2	SIDE MOUNTED LADDER RACKS (Note: Not available with Option 2.20) (SAP MATERIAL NO. 10024428)
2.3	LADDER RACK WITH CONDUIT CARRIER (SAP MATERIAL NO. 10024838)
2.5	VISE RACK WITH PIPE HANGER (SAP MATERIAL NO. 10013003)
2.6	TELESCOPING TOP WITH TAILGATE ENCLOSURE (SAP MATERIAL NO. 10013002)
2.7	REAR BUMPER, MANUFACTURER'S STANDARD 8" WITH TREADPLATE (SAP MATERIAL NO. 10024430)
2.8	REAR BUMPER, MANUFACTURER'S STANDARD 8" WITH "GRIP STRUT (SAP MATERIAL NO. 10012998)
2.9	REAR BUMPER, MANUFACTURER'S STANDARD 12" WITH TREADPLATE (SAP MATERIAL NO. 10012999)
2.10	REAR BUMPER, MANUFACTURER'S STANDARD 12" WITH "GRIP STRUT (SAP MATERIAL NO. 10024431)

OPTIONAL EQUIPMENT FOR SERIES 2005 SERVICE BODY (CONTINUED)

OPT. NO.	DESCRIPTION
2.11	CENTRAL LOCKING SYSTEM (SAP MATERIAL NO. 10012995)
2.12	TREADPLATE, 3/16” FOR FLOOR (SAP MATERIAL NO. 10013001
2.13	ANTI-SLIP COVERING FOR FLOOR (SAP MATERIAL NO. 10012994)
2.14	16 GAUGE TREADPLATE OVERLAY INSIDE OF BODY (SAP MATERIAL NO. 10024432)
2.15	16 GAUGE TREADPLATE OVERLAY TOP OF BODY (SAP MATERIAL NO. 10012993)
2.16	ANTI-SLIP COVERING FOR OPTION 2.15 (SAP MATERIAL NO. 10024811)
2.19	SIX-WAY CONNECTOR MOUNTED (SAP MATERIAL NO. 10013000)
2.20	TOP-OPENING COMPARTMENT (Note: Not available with Option 2.15) (SAP MATERIAL NO. 10025586)
2.21	CARGO AREA FLOOR MAT, RUBBER (SAP MATERIAL NO. 10024433)
2.22	HEADACHE RACK (SAP MATERIAL NO. 10012996)
2.23	CRANE WITH PLANETARY GEAR WINCH (SAP MATERIAL NO. 10024397)
2.25	THREE-DRAWER STORAGE MODULE (SAP MATERIAL NO. 10024398)

OPTIONAL EQUIPMENT FOR SERIES 875CLEV60CA CAB AND CHASSIS (CONTINUED)

OPTION NO.	DESCRIPTION
B	**SERIES 21001 STATIONARY PLATFORM/STAKE BODY**, 112 INCHES LENGTH, 60 INCH CA, 96 INCHES OVERALL TO RUB RAILS (SAP MATERIAL NO. 10013036)

OPTIONAL EQUIPMENT FOR SERIES 21001 STAKE BODY

OPT. NO.	DESCRIPTION
1	STAKE RACK SECTIONS (SAP MATERIAL NO. 10013037)
2	STEEL FLOORING (SAP MATERIAL NO. 10024399)
3	RHINO LININGS TUFF STUFF ANTISKID COATING ON STEEL FLOOR (SAP MATERIAL NO. 10013039
4	LIFT GATE (SAP MATERIAL NO. 10013040)
5	BUMPER: ICC BUMPER PER DRAWING “A” 2” BALL (SAP MATERIAL NO. 10024440)
6	BUMPER: ICC BUMPER PER DRAWING “A”, 2-5/16” BALL (SAP MATERIAL NO. 10024441)
7	BUMPER: ICC BUMPER PER DRAWING “B” (SAP MATERIAL NO. 10013041
8	REPLACEMENT BALL (SAP MATERIAL NO. 10024442)
9	FOUR-WAY ELECTRICAL ROUND CONNECTOR (SAP MATERIAL NO. 10024443)
10	SIX-WAY ELECTRICAL ROUND CONNECTOR (SAP MATERIAL NO. 10024444)
11	SEVEN-WAY ELECTRICAL ROUND CONNECTOR (SAP MATERIAL NO. 10013042
12.2	UNDER BED BOX 24” LONG, 18” DEPTH, 18” HEIGHT (SAP MATERIAL NO. 10024445)
12.3	UNDER BED BOX 30” LONG, 18” DEPTH, 18” HEIGHT (SAP MATERIAL NO. 10024446)
12.4	UNDER BED BOX 36” LONG, 18” DEPTH, 18” HEIGHT (SAP MATERIAL NO. 10024447)
12.5	ALL UNDER SIDES COATED (SAP MATERIAL NO. 10013043)

OPTIONAL EQUIPMENT FOR SERIES 875CLEV60CA CAB AND CHASSIS (CONTINUED)

OPTION NO.	DESCRIPTION
C	**BODY, DUMP TRUCK 2/3 CU.YD.** SN4000 8' BED 60" CA (SAP MATERIAL NO. 10012967)

OPTIONAL EQUIPMENT FOR SERIES 4000 DUMP TRUCK BODY 2/3 CU. YD. (CONTINUED)

OPTION NO.	DESCRIPTION
1	HITCH, HOLLAND PINTLE MODEL PH-T-60-AOL-8 OR CITY-APPROVED EQUAL REINFORCED TO FRAME, CAPABLE OF PULLING MINIMUM OF 30,000 LBS. (SAP MATERIAL NO. 10012971)
3	"D" RINGS, BUYER MODEL #B48 1 OD BAR STOCK 3" X 3" ID OIL FIELD TYPE FOLDING MOUNTED ON REAR BUMPER (SAP MATERIAL NO. 10012972)
4	CONNECTOR 4-POLE FEMALE FLAP TO BE MOUNTED ON REAR BUMPER (SAP MATERIAL NO. 10024448)
5	CONNECTOR 6-WAY FEMALE FLAP TO BE PROVIDED AND MOUNTED ON REAR BUMPER AND CONNECT TO CABLE (SAP MATERIAL NO. 10012970)
6	RELOCATION OF AIR AND ELECTRICAL TRAILER CONNECTOR TO A PROTECTED LOCATION AT THE REAR SKIRT FOR AIR BRAKE SYSTEM ONLY (SAP MATERIAL NO. 10024449)
7	STROBE LIGHT TARGET TECH MDL. 851, AMBER, HEADACHE RACK MOUNTED, SWITCH TO BE CAB-MOUNTED WITH INDICATOR LIGHT, WIRING NOT EXPOSED, AND TO HAVE HOT CONNECTOR EXPOSED AND TO HAVE HOT CONNECTOR FUSE. ALL OUTSIDE WIRE MOUNTING SHALL BE PROTECTED BY TUBING. SHALL ALSO BE FURNISHED WITH A BRUSH GUARD. (SAP MATERIAL NO. 10012974)
11	TARP, DONOVAN 5000GL HD PVC COATED MESH COVER WITH NO. 1647 WIND DEFLECTOR (SAP MATERIAL NO. 10012969)
12	TARP, DONOVAN 2000SU HD PVC COATED MESH COVER. SUPPLIER SHALL FURNISH SIDEBOARDS WITH THIS OPTION (SAP MATERIAL NO. 10024450)
14	BEDLINER, QUICKSILVER TIVAR-UHMW POLY, OR CITY-APPROVED EQUAL, 1/2" THICK POLYMER MATERIAL, MOUNTED ON BULKHEAD, SIDE WALLS AND FLOOR. SECTIONS TO BE CONNECTED WITH FASTENERS FOR LINING REPLACEMENT. SUPPLIER SHALL PROVIDE A MINIMUM 12-MONTH WARRANTY (SAP MATERIAL NO. 10024451)
17	SIGNBOARD, ARROW WANCO MODEL NO. 25SAC VEHICLE MOUNTED, 25 LIGHTS, 36" X 72" PANEL SIZE WITH ELECTRIC ACTUATOR LIFT, MOUNTED (SAP MATERIAL NO. 10024452)

OPTIONAL EQUIPMENT FOR SERIES 875CLEV60CA CAB AND CHASSIS (CONTINUED)

OPTIONAL EQUIPMENT FOR SERIES 4000 DUMP TRUCK BODY 2/3 CU. YD. (CONTINUED)

OPTION NO.	DESCRIPTION
18	TRAILER TOWING PACKAGE, INCLUDING SEVEN-WAY ELECTRICAL CABLE EXTENDED TO REAR OF FRAME FOR STRAIGHT TRUCK APPLICATION (SAP MATERIAL NO. 10024453)
19	SPREADER WITH DOUBLE AUGER MONROE MODEL MS964DA, WARREN MODEL AC620A WITH DUAL AUGER OPTION OR CITY APPROVED EQUAL. REAR MOUNTED PTO ACTIVATED TAILGATE SPREADER WITH DUAL AUGER, CAB MOUNTED PEDESTAL CONSOLE CONTROL, HYDRAULIC PUMP OPERATED, 7-GAUGE FULL TOP AND BOTTOM OPENING TROUGH WITH HINGED COVER, THREE POSITION SPINNER (LEFT, CENTER & RIGHT), DUAL AUGER WITH REVERSE FLIGHTING, CHAIN DRIVEN, QUICK DISCONNECT COUPLERS, QUICK DETACH HARDWARE TO INCLUDE QD BRACKET & PIN, CLEVIS PIN, HANGAR BAR AND HAIRPIN KEEPER AUGER AND SPINNER MOTORS, HYDRAULICALLY OPERATED, LOW SPEED, HI-TORQUE, MOUNTED ON ADJUSTABLE BRACKETS (SAP MATERIAL NO. 10024454)
20	PAINT BASE COAT IMRON COLOR TO MATCH CAB (SAP MATERIAL NO. 10012973)
21	HITCH, HOLLAND PINTLE MODEL PH16B COMBINATION PINTLE HOOK AND 2” BALL HITCH (SAP MATERIAL NO. 10024455)

ITEM NO.	DESCRIPTION

43 **SERIES 875C-LEV84CA CAB & CHASSIS**, REGULAR CAB, 1-TON, 84 INCH CA, DUAL REAR WHEELS, GASOLINE, MUST MEET OR EXCEED THE FEDERAL LEV CERTIFICATION, INCLUDING THE FOLLOWING STANDARD EQUIPMENT
(SAP MATERIAL NO. 10024836)

MANUFACTURER	**FORD**	**CHEVROLET**
MODEL	F350 SD	C3500HD C31403

SPECIFICATION	**MINIMUM REQUIREMENTS**
WHEEL BASE (INCHES)	162
CAB TO AXLE (INCHES)	84
APPROX. PAYLOAD (POUNDS)	5,870
GVWR (POUNDS)	11,400
ENGINE DISPLACEMENT (LITERS)	6.0L-V8
ENGINE NET HP	316
ENGINE TORQ	380
TIRE SIZE & LOAD RANGE	MFG. STANDARD
RIM SIZE (INCHES)	MFG. STANDARD

STANDARD EQUIP. NO	DESCRIPTION
1	AIR CONDITIONING INCLUDES OPT 87
37.1	COLORS, SOLID (OEM STANDARD)
59.1	FUEL TANK(S), 30 GALLON CAPACITY
72	MIRRORS, MANUALLY EXTENDABLE
77	STEERING, POWER
91	RADIO, AM/FM
107.1	SPARE TIRE AND WHEEL WITH LOCKABLE CARRIER
128	TRANSMISSION, AUTOMATIC
132.1	TRANSMISSION COOLER
144	INTERMITTENT WIPERS
213.2	TRAILER TOWING PACKAGE
241	ANTILOCK BRAKING SYSTEM (OEM STANDARD)
253	CARGO AREA LIGHT

OPTIONAL EQUIPMENT:

OPT. NO.	DESCRIPTION

37.4 COLOR: YELLOW: FEDERAL STANDARD 595B, COLOR NO. 13507 (QTY.: 1-4)
(SAP MATERIAL NO. 10024456)

37.5 COLOR: YELLOW: FEDERAL STANDARD 595B, COLOR NO. 13507 (QTY : 5 OR MORE)
(SAP MATERIAL NO. 10024457)

45 LIMITED SLIP DIFFERENTIAL
(SAP MATERIAL NO. 10024458)

111A SPOTLIGHT, LEFT SIDE
(SAP MATERIAL NO. 10024459)

OPT. NO.	DESCRIPTION
111.1	DUAL SPOTLIGHTS ON LEFT & RIGHT SIDES (SAP MATERIAL NO. 10024460)
223	DIFFERENTIAL RATIO: NORMAL - OPTIONAL RATIO(S) (SAP MATERIAL NO. 10024462)
224.4	STROBE LIGHT, MOUNTED ON ROOF, LOW PROFILE (SAP MATERIAL NO. 10024463)
224.5	ROOF-MOUNTED SPOTLIGHT (SAP MATERIAL NO. 10024464)
224.6	ROOF-MOUNTED SPOTLIGHTS, DUAL (2) (SAP MATERIAL NO. 10024465)
224.7	LIGHTBAR AND SIREN PACKAGE, WHELEN MODEL FREEDOM LED (SAP MATERIAL NO. 10024466)
224.8	LIGHTBAR, MINIFREEDOM, WHELEN MODEL FT8AAAAP (SAP MATERIAL NO. 10024467)
251	ELECTRIC BRAKE CONTROLLER (SAP MATERIAL NO. 10024468)

OPTIONAL EQUIPMENT FOR SERIES 875CLEV84CA CAB AND CHASSIS (CONTINUED)

OPTION NO.	DESCRIPTION
A	**SERIES 2006 SERVICE BODY**, REGULAR OR STANDARD TYPE, 132 INCHES LONG TO FIT AN 84 INCH CAB TO AXLE, DUAL REAR WHEEL, CAB & CHASSIS, INCLUDING THE FOLLOWING STANDARD EQUIPMENT (SAP MATERIAL NO. 10024839)

STANDARD EQUIP. NO	DESCRIPTION
2.17	LOCKING WATER COOLER
2.18	TAILGATE, OEM STANDARD
2.26	CLEARANCE LIGHTS
2.27	MUD FLAPS THREE (3) VERTICAL COMPARTMENTS ON EACH SIDE ONE (1) HORIZONTAL COMPARTMENT OVER WHEEL WELL ON EACH SIDE

APPROVED BRANDS

RKI:	L84DW89 (Chevrolet/Dodge)/ L84DW94 (Ford)
READING:	132GADW (Chevrolet)/ 132DADW (Dodge)/ 132FADW (Ford)
KNAPHEIDE:	6132DJ (Chevrolet/Dodge)/ 6132D54J (Ford)
OMAHA:	132DV (Chevrolet/Dodge)/ 132D54V (Ford)
STAHL:	CST134VVD (205925) (Chevrolet) / CST134VVD (20616) (Ford/ Dodge)

OPTIONAL EQUIPMENT FOR SERIES 2006 SERVICE BODY:

OPT. NO.	DESCRIPTION
2.1	OVERHEAD LADDER RACKS (SAP MATERIAL NO. 10024469)
2.2	SIDE MOUNTED LADDER RACKS (Note: Not available with Option 2.20) (SAP MATERIAL NO. 10024470)
2.3	LADDER RACK WITH CONDUIT CARRIER (SAP MATERIAL NO. 10024471)
2.5	VISE RACK WITH PIPE HANGER (SAP MATERIAL NO. 10024472)
2.6	TELESCOPING TOP WITH TAILGATE ENCLOSURE (SAP MATERIAL NO. 10024473)
2.7	REAR BUMPER, MANUFACTURER'S STANDARD 8" WITH TREADPLATE (SAP MATERIAL NO. 10024474)
2.8	REAR BUMPER, MANUFACTURER'S STANDARD 8" WITH "GRIP STRUT" (SAP MATERIAL NO. 10024475)
2.9	REAR BUMPER, MANUFACTURER'S STANDARD 12" WITH TREADPLATE (SAP MATERIAL NO. 10024476)
2.10	REAR BUMPER, MANUFACTURER'S STANDARD 12" WITH "GRIP STRUT" (SAP MATERIAL NO. 10024477)

OPTIONAL EQUIPMENT FOR SERIES 2006 SERVICE BODY (CONTINUED):

OPT. NO.	DESCRIPTION
2.11	CENTRAL LOCKING SYSTEM (SAP MATERIAL NO. 10024478)
2.12	TREADPLATE, 3/16” FOR FLOOR (SAP MATERIAL NO. 10024479)
2.13	ANTI-SLIP COVERING FOR FLOOR (SAP MATERIAL NO. 10024480)
2.14	16 GAUGE TREADPLATE OVERLAY INSIDE OF BODY (SAP MATERIAL NO. 10024481)
2.15	GAUGE TREADPLATE OVERLAY TOP OF BODY (SAP MATERIAL NO. 10024482)
2.16	ANTI-SLIP COVERING FOR OPTION 2.15 (SAP MATERIAL NO. 10024483)
2.19	SIX-WAY CONNECTOR MOUNTED (SAP MATERIAL NO. 10024484)
2.20	TOP OPENING COMPARTMENT (Note: Not available with Option 2.15) (SAP MATERIAL NO. 10024485)
2.21	CARGO AREA FLOOR MAT, RUBBER (SAP MATERIAL NO. 10024486)
2.22	HEADACHE RACK (SAP MATERIAL NO. 10024487)
2.23	CRANE WITH PLANETARY GEAR WINCH (SAP MATERIAL NO. 10024489)
2.25	THREE-DRAWER STORAGE MODULE (SAP MATERIAL NO. 10024488)

OPTION NO.	DESCRIPTION
B	**SERIES 21004 STATIONARY PLATFORM/STAKE BODY** 144 INCHES LENGTH, 84 INCH CA, 96 INCHES OVERALL TO RUB RAILS (SAP MATERIAL NO. 10025600)

OPTIONAL EQUIPMENT

OPT. NO.	DESCRIPTION
1	STAKE RACK SECTIONS (SAP MATERIAL NO. 10024500)
2	STEEL FLOORING (SAP MATERIAL NO. 10024501)
3	RHINO LININGS TUFF-STUFF ANTISKID COATING ON STEEL FLOOR (SAP MATERIAL NO. 10024502)
4	LIFT GATE (SAP MATERIAL NO. 10024503)
5	BUMPER: ICC BUMPER PER DRAWING “A”, 2” BALL (SAP MATERIAL NO. 10024504)
6	BUMPER: ICC BUMPER PER DRAWING “A”, 2-5/16” BALL (SAP MATERIAL NO. 10024505)
7	BUMPER: ICC BUMPER PER DRAWING “B” (SAP MATERIAL NO. 10024506)
8	REPLACEMENT BALL (SAP MATERIAL NO. 10024435)
9	FOUR-WAY ELECTRICAL ROUND CONNECTOR (SAP MATERIAL NO. 10024436)
10	SIX-WAY ELECTRICAL ROUND CONNECTOR (SAP MATERIAL NO. 10024437)
11	SEVEN-WAY ELECTRICAL ROUND CONNECTOR (SAP MATERIAL NO. 10024438)
12.2	UNDER BED BOX 24” LONG, 18” DEPTH, 18” HEIGHT (SAP MATERIAL NO. 10024439)
12.3	UNDER BED BOX 30” LONG, 18” DEPTH, 18” HEIGHT (SAP MATERIAL NO. 10024510)
12.4	UNDER BED BOX 36” LONG, 18” DEPTH, 18” HEIGHT (SAP MATERIAL NO. 10024511)
13	ALL UNDER SIDES COATED (SAP MATERIAL NO. 10024512)

ITEM NO.	DESCRIPTION

44 **SERIES 875C-LEV-CC56CA CAB & CHASSIS, CREW CAB CONFIGURATION**, 1-TON, 56 INCH CA, DUAL REAR WHEELS, GASOLINE, MUST MEET OR EXCEED THE FEDERAL LEV CERTIFICATION, INCLUDING THE FOLLOWING STANDARD EQUIPMENT
(SAP MATERIAL NO. 10024832)

MANUFACTURER	**FORD**	**CHEVROLET**
MODEL	F350 SD	C3500HD CC30943

SPECIFICATION	**MINIMUM REQUIREMENTS**
WHEEL BASE (INCHES)	167
CAB TO AXLE (INCHES)	56
APPROX. PAYLOAD (POUNDS)	5,080
GVWR (POUNDS)	11,200
ENGINE DISPLACEMENT (LITERS)	6.0L-V8
ENGINE NET HP	316
ENGINE TORQ	380
TIRE SIZE & LOAD RANGE	MFG. STANDARD
RIM SIZE (INCHES)	MFG. STANDARD

STANDARD EQUIP. NO	DESCRIPTION
1	AIR CONDITIONING INCLUDES OPT 87
37.1	COLORS, SOLID (OEM STANDARD)
59.1	FUEL TANK(S), 30 GALLON CAPACITY
72	MIRRORS, MANUALLY EXTENDABLE
77	STEERING POWER
91	RADIO, AM/FM
107.1	SPARE TIRE AND WHEEL WITH LOCKABLE CARRIER
128	TRANSMISSION, AUTOMATIC
132.1	TRANSMISSION COOLER
144	INTERMITTENT WIPERS
213.2	TRAILER TOWING PACKAGE
241	ANTILOCK BRAKING SYSTEM (OEM STANDARD)
253	CARGO AREA LIGHT

OPTIONAL EQUIPMENT

OPT. NO.	DESCRIPTION
37.4	COLOR: YELLOW: FEDERAL STANDARD 595B, COLOR NO. 13507 (QTY: 1-4) (SAP MATERIAL NO. 10024513)
37.5	COLOR: YELLOW: FEDERAL STANDARD 595B, COLOR NO. 13507 (QTY: 5 OR MORE) (SAP MATERIAL NO. 10024514)

OPT. NO.	DESCRIPTION
45	LIMITED SLIP DIFFERENTIAL (SAP MATERIAL NO. 10024515)
111A	SPOTLIGHT, LEFT SIDE (SAP MATERIAL NO. 10024516)
111.1	DUAL SPOTLIGHTS, LEFT AND RIGHT SIDES (SAP MATERIAL NO. 10024517)
223	DIFFERENTIAL RATIO: NORMAL – OPTIONAL RATIO(S) (SAP MATERIAL NO. 10024519)
224.4	STROBE LIGHT, MOUNTED ON ROOF, LOW PROFILE (SAP MATERIAL NO. 10024520)
224.5	ROOF-MOUNTED SPOTLIGHT (SAP MATERIAL NO. 10024521)
224.6	ROOF-MOUNTED SPOTLIGHTS, DUAL (2) (SAP MATERIAL NO. 10024522)
224.7	LIGHTBAR AND SIREN PACKAGE WHELEN MODEL FREEDOM LED (SAP MATERIAL NO. 10024523)
224.8	LIGHTBAR, MINIFREEDOM, WHELEN MODEL FT8AAAAP (SAP MATERIAL NO. 10024524)

OPTIONAL EQUIPMENT FOR SERIES 875CLEVCC56CA CAB AND CHASSIS (CONTINUED)

OPT. NO.	DESCRIPTION
A	**SERIES 2004 SERVICE BODY**, REGULAR OR STANDARD TYPE, 96 INCHES LONG TO FIT A 56 INCH CAB TO AXLE, DUAL REAR WHEEL CAB & CHASSIS, INCLUDING THE FOLLOWING STANDARD EQUIPMENT (SAP MATERIAL NO. 10024833)

STANDARD EQUIP. NO	DESCRIPTION
2.17	LOCKING WATER COOLER
2.18	TAILGATE, OEM STANDARD
2.26	CLEARANCE LIGHTS
2.27	MUD FLAPS TWO (2) VERTICAL COMPARTMENTS ON EACH SIDE ONE (1) HORIZONTAL COMPARTMENT OVER WHEEL WELL ON EACH SIDE APPROVED BRANDS RKI MODEL L56DW94 READING MODEL 98ADW KNAPHEIDE 696D54J OMAHA STANDARD 96D54V STAHL CST98VVD

OPTIONAL EQUIPMENT FOR SERIES 2004 SERVICE BODY:

OPT. NO.	DESCRIPTION
2.1	OVERHEAD LADDER RACKS (SAP MATERIAL NO. 10024525)
2.2	SIDE-MOUNTED LADDER RACKS (Note: Not available with Option 2.20) (SAP MATERIAL NO. 10024526)
2.3	LADDER RACK WITH CONDUIT CARRIER (SAP MATERIAL NO. 10024835)
2.5	VISE RACK WITH PIPE HANGER (SAP MATERIAL NO. 10024509)
2.6	TELESCOPING TOP WITH TAILGATE ENCLOSURE (SAP MATERIAL NO. 10024540)
2.7	REAR BUMPER, MANUFACTURER'S STANDARD 8" WITH TREADPLATE (SAP MATERIAL NO. 10024541)
2.8	REAR BUMPER, MANUFACTURER'S STANDARD 8" WITH "GRIP STRUT (SAP MATERIAL NO. 10024542)
2.9	REAR BUMPER, MANUFACTURER'S STANDARD 12" WITH TREADPLATE (SAP MATERIAL NO. 10024543)
2.10	REAR BUMPER, MANUFACTURER'S STANDARD 12" WITH "GRIP STRUT (SAP MATERIAL NO. 10024544)

OPTIONAL EQUIPMENT FOR SERIES 875CLEVCC56CA CAB AND CHASSIS (CONTINUED)

OPTIONAL EQUIPMENT FOR SERIES 2004 SERVICE BODY (CONTINUED):

OPT. NO.	DESCRIPTION
2.11	CENTRAL LOCKING SYSTEM (SAP MATERIAL NO. 10024545)
2.12	TREADPLATE, 3/16” FOR FLOOR (SAP MATERIAL NO. 10024546)
2.13	ANTI-SLIP COVERING FOR FLOOR (SAP MATERIAL NO. 10024547)
2.14	16 GAUGE TREADPLATE OVERLAY INSIDE OF BODY (SAP MATERIAL NO. 10024548)
2.15	16 GAUGE TREADPLATE OVERLAY TOP OF BODY (SAP MATERIAL NO. 10024549)
2.16	ANTI-SLIP COVERING FOR OPTION 2.15 (SAP MATERIAL NO. 10024550)
2.19	SIX-WAY CONNECTOR MOUNTED (SAP MATERIAL NO. 10024551)
2.20	TOP- OPENING COMPARTMENT (Note: Not available with Option 2.15) (SAP MATERIAL NO. 10024552
2.21	CARGO AREA FLOOR MAT, RUBBER (SAP MATERIAL NO. 10024553)
2.22	HEADACHE RACK (SAP MATERIAL NO. 10024554)
2.23	CRANE WITH PLANETARY GEAR WINCH (SAP MATERIAL NO. 10024555)
2.27	THREE-DRAWER STORAGE MODULE (SAP MATERIAL NO. 10024507)

ITEM NO.	DESCRIPTION

45 **SERIES 875DLEV 60CA CAB & CHASSIS**, REGULAR CAB, 1-TON, 60 INCH CA, DUAL REAR WHEELS, DIESEL, MUST MEET OR EXCEED THE FEDERAL LEV CERTIFICATION INCLUDING THE FOLLOWING STANDARD EQUIPMENT
(SAP MATERIAL NO. 10013305)

MANUFACTURER	**FORD**	**CHEVROLET**
MODEL	F350 SD	C3500HD CC36003

SPECIFICATION	**MINIMUM REQUIREMENTS**
WHEEL BASE (INCHES)	137
CAB TO AXLE (INCHES)	60
APPROX. PAYLOAD (POUNDS)	5800
GVWR (POUNDS)	11,200
ENGINE DISPLACEMENT (LITERS)	6.6L-V8 DIESEL
ENGINE NET HP	300
ENGINE TORQ	660
TIRE SIZE & LOAD RANGE	MFG. STANDARD
RIM SIZE (INCHES)	MFG. STANDARD

STANDARD EQUIP. NO	DESCRIPTION
1	AIR CONDITIONING INCLUDES OPT. 87
37.1	COLORS, SOLID (OEM STANDARD)
59.1	FUEL TANK(S), 30 GALLON CAPACITY
71	MIRRORS, LOW MOUNT TYPE
77	STEERING, POWER
91	RADIO, AM/FM
107.1	SPARE TIRE AND WHEEL WITH LOCKABLE CARRIER
128	TRANSMISSION, AUTOMATIC
132.1	TRANSMISSION COOLER
144	INTERMITTENT WIPERS
213.2	TRAILER TOWING PACKAGE
241	ANTILOCK BRAKING SYSTEM (OEM STANDARD)
253	CARGO AREA LIGHT

OPTIONAL EQUIPMENT

OPT. NO.	DESCRIPTION
37.4	COLOR: YELLOW: FEDERAL STANDARD 595B, COLOR NO. 13507 (QTY: 1-4) (SAP MATERIAL NO. 10024557)
37.5	COLOR: YELLOW: FEDERAL STANDARD 595B, COLOR NO. 13507 (QTY 5 OR MORE) (SAP MATERIAL NO. 10024558)
45	LIMITED SLIP DIFFERENTIAL (SAP MATERIAL NO. 10024559)
111A	SPOTLIGHT, LEFT SIDE (SAP MATERIAL NO. 10024560)
111.1	DUAL SPOTLIGHTS, LEFT AND RIGHT SIDES (SAP MATERIAL NO. 10024561)

OPT. NO.	DESCRIPTION
223	DIFFERENTIAL RATIO: NORMAL – OPTIONAL RATIO(S) (SAP MATERIAL NO. 10024563)
224.4	STROBE LIGHT, MOUNTED ON ROOF, LOW PROFILE (SAP MATERIAL NO. 10024564)
224.5	ROOF-MOUNTED SPOTLIGHT (SAP MATERIAL NO. 10024565)
224.6	ROOF-MOUNTED SPOTLIGHTS, DUAL (2) (SAP MATERIAL NO. 10024566)
224.7	LIGHTBAR AND SIREN PACKAGE, WHELEN MODEL FREEDOM LED (SAP MATERIAL NO. 10024567)
224.8	LIGHTBAR MINIFREEDOM, WHELEN MODEL FT8AAAAP (SAP MATERIAL NO. 10024568)
240	ELECTRONIC ENGINE SPEED CONTROL (SAP MATERIAL NO. 10024569)
249	HOUR METER (SAP MATERIAL NO. 10024570)
251	ELECTRIC BRAKE CONTROLLER (SAP MATERIAL NO. 10024571)

OPTIONAL EQUIPMENT FOR SERIES 875DLEV60CA CAB AND CHASSIS (CONTINUED)

OPTION NO.	DESCRIPTION
A	**SERIES 2005 SERVICE BODY**, REGULAR OR STANDARD TYPE, 108 INCHES LONG TO FIT A 60 INCH CAB TO AXLE, DUAL REAR WHEEL CAB & CHASSIS, INCLUDING THE FOLLOWING STANDARD EQUIPMENT (SAP MATERIAL NO. 10013004)

STANDARD EQUIP. NO	DESCRIPTION
2.17	LOCKING WATER COOLER
2.18	TAILGATE, OEM STANDARD
2.26	CLEARANCE LIGHTS
2.27	MUD FLAPS TWO (2) VERTICAL COMPARTMENTS ON EACH SIDE ONE (1) HORIZONTAL COMPARTMENT OVER WHEEL WELL ON EACH SIDE

APPROVED BRANDS

RKI:	L60DW89 (Chevrolet/Dodge)/ L60DW94 (Ford)
READING:	108GADW (Chevrolet)/ 108DADW (Dodge)/ 108FADW (Ford)
KNAPHEIDE:	6108DJ (Chevrolet/Dodge)/ 6108D54J (Ford)
OMAHA:	108DV (Chevrolet/Dodge)/ 108D54V (Ford)
STAHL:	CST110VVD (205908) (Chevrolet) / CST110VVD (205916) (Ford/Dodge)

OPTIONAL EQUIPMENT FOR SERIES 2005 SERVICE BODY:

OPT. NO.	DESCRIPTION
2.1	OVERHEAD LADDER RACKS (SAP MATERIAL NO. 10024572)
2.2	SIDE-MOUNTED LADDER RACKS (Note: Not available with Option 2.20) (SAP MATERIAL NO. 10024573)
2.3	LADDER RACK WITH CONDUIT CARRIER (SAP MATERIAL NO. 10024574)
2.5	VISE RACK WITH PIPE HANGER (SAP MATERIAL NO. 10024575)
2.6	TELESCOPING TOP WITH TAILGATE ENCLOSURE (SAP MATERIAL NO. 10024576)
2.7	REAR BUMPER, MANUFACTURER'S STANDARD 8" TREADPLATE (SAP MATERIAL NO. 10024577)
2.8	REAR BUMPER, MANUFACTURER'S STANDARD 8" WITH "GRIP STRUT" (SAP MATERIAL NO. 10024578)
2.9	REAR BUMPER, MANUFACTURER'S STANDARD 12" WITH TREADPLATE (SAP MATERIAL NO. 10024579)
2.10	REAR BUMPER, MANUFACTURER'S STANDARD 12" WITH "GRIP STRUT" (SAP MATERIAL NO. 10024580)

OPTIONAL EQUIPMENT FOR SERIES 2005 SERVICE BODY (CONTINUED)

OPT. NO.	DESCRIPTION
2.11	CENTRAL LOCKING SYSTEM (SAP MATERIAL NO. 10024581)
2.12	TREADPLATE, 3/16” FOR FLOOR (SAP MATERIAL NO. 10024582)
2.13	ANTI-SLIP COVERING FOR FLOOR (SAP MATERIAL NO. 10024583)
2.14	16 GAUGE TREADPLATE OVERLAY INSIDE OF BODY (SAP MATERIAL NO. 10024584)
2.15	16 GAUGE TREADPLATE OVERLAY TOP OF BODY (SAP MATERIAL NO. 10024585)
2.16	ANTI-SLIP COVERING FOR OPTION 2.15 (SAP MATERIAL NO. 10024586)
2.19	SIX-WAY CONNECTOR MOUNTED (SAP MATERIAL NO. 10024587)
2.20	TOP-OPENING COMPARTMENT (Note: Not available with Option 2.15) (SAP MATERIAL NO. 10024588)
2.21	CARGO AREA FLOOR MAT, RUBBER (SAP MATERIAL NO. 10024589)
2.22	HEADACHE RACK (SAP MATERIAL NO. 10024590)
2.23	CRANE WITH PLANETARY GEAR WINCH (SAP MATERIAL NO. 10013005)
2.25	THREE-DRAWER STORAGE MODULE (SAP MATERIAL NO. 10024592)

OPTIONAL EQUIPMENT FOR SERIES 875DLEV60CA CAB AND CHASSIS (CONTINUED)

OPTION NO.	DESCRIPTION
B	**SERIES 21001 STATIONARY PLATFORM/STAKE BODY**, 112 INCHES LENGTH, 60 INCH CA, 96 INCHES OVERALL TO RUB RAILS (SAP MATERIAL NO. 10024618)

OPTIONAL EQUIPMENT FOR SERIES 21001 STAKE BODY

OPT. NO.	DESCRIPTION
1	STAKE RACK SECTIONS (SAP MATERIAL NO. 10024619)
2	STEEL FLOORING (SAP MATERIAL NO. 10024730)
3	RHINO LININGS TUFF-STUFF ANTISKID COATING ON STEEL FLOOR (SAP MATERIAL NO. 10024731)
4	LIFT GATE (SAP MATERIAL NO. 10024732
5	BUMPER: ICC BUMPER PER DRAWING “A” 2" BALL (SAP MATERIAL NO. 10024733)
6	BUMPER: ICC BUMPER PER DRAWING “A”, 2-5/16” BALL (SAP MATERIAL NO. 10024734)
7	BUMPER: ICC BUMPER PER DRAWING “B” (SAP MATERIAL NO. 10024735)
8	REPLACEMENT BALL (SAP MATERIAL NO. 10024736)
9	FOUR-WAY ELECTRICAL ROUND CONNECTOR (SAP MATERIAL NO. 10024737)
10	SIX-WAY ELECTRICAL ROUND CONNECTOR (SAP MATERIAL NO. 10024738)
11	SEVEN-WAY ELECTRICAL ROUND CONNECTOR (SAP MATERIAL NO. 10024739)
12.2	UNDER BED BOX 24” LONG, 18” DEPTH, 18” HEIGHT (SAP MATERIAL NO. 10024740)
12.3	UNDER BED BOX 30” LONG, 18” DEPTH, 18” HEIGHT (SAP MATERIAL NO. 10024741)
12.4	UNDER BED BOX 36” LONG, 18” DEPTH, 18” HEIGHT (SAP MATERIAL NO. 10024742)
13	ALL UNDER SIDES COATED (SAP MATERIAL NO. 10024743)

OPTIONAL EQUIPMENT FOR SERIES 875DLEV60CA CAB AND CHASSIS (CONTINUED)

OPTION NO.	DESCRIPTION
C	**BODY, DUMP TRUCK 2/3 CU.YD.** **SN4000** 8' BED 60" CA (SAP MATERIAL NO. 10024744)

OPTIONAL EQUIPMENT FOR DUMP BODY

OPT. NO.	DESCRIPTION
1	HITCH, HOLLAND PINTLE MODEL PH-T-60-AOL-8 OR CITY-APPROVED EQUAL, REINFORCED TO FRAME, CAPABLE OF PULLING MINIMUM OF 30,000 LBS. (SAP MATERIAL NO. 10024745)
3	“D” RINGS, BUYER MODEL #B48 1 OD BAR STOCK 3” X 3” ID OIL FIELD TYPE FOLDING MOUNTED ON REAR BUMPER (SAP MATERIAL NO. 10024746)
4	4-POLE FEMALE CONNECTOR FLAP TO BE MOUNTED ON REAR BUMPER \ (SAP MATERIAL NO. 10024747)
5	6-WAY FEMALE CONNECTOR FLAP TO BE PROVIDED AND MOUNTED ON REAR BUMPER AND CONNECT TO CABLE (SAP MATERIAL NO. 10024748)
6	RELOCATION OF AIR AND ELECTRICAL TRAILER CONNECTOR TO A PROTECTED LOCATION AT THE REAR SKIRT FOR AIR BRAKE SYSTEM ONLY (SAP MATERIAL NO. 10024749)
7	STROBE LIGHT TARGET TECH NO. 851, AMBER, HEADACHE RACK MOUNTED, SWITCH TO BE CAB-MOUNTED WITH INDICATOR LIGHT, WIRING NOT EXPOSED, AND TO HAVE HOT CONNECTOR EXPOSED AND TO HAVE HOT CONNECTOR FUSE. ALL OUTSIDE WIRE MOUNTING TO BE PROTECTED BY TUBING. SHALL BE FURNISHED WITH BRUSH GUARD (SAP MATERIAL NO. 10024750)
11	TARP DONOVAN 5000GL HD PVC COATED MESH COVER WITH WIND DEFLECTOR (SAP MATERIAL NO. 10024751)
13	TARP DONOVAN 2000SR HOUSING AND HD PVC COATED MESH COVER SUPPLIER SHALL FURNISH SIDEBOARDS WITH THIS OPTION (SAP MATERIAL NO. 10024752)
14	BEDLINER QUICKSILVER TIVAR-UHMW POLY, OR CITY-APPROVED EQUAL, 1/2" THICK POLYMER MATERIAL, MOUNTED ON BULKHEAD, SIDE WALLS AND FLOOR. SECTIONED TO BE CONNECTED WITH FASTENERS FOR LINING REPLACEMENT. SUPPLIER SHALL PROVIDE A MINIMUM 12-MONTH WARRANTY (SAP MATERIAL NO. 10024753)

OPTIONAL EQUIPMENT FOR SERIES 875DLEV60CA CAB AND CHASSIS (CONTINUED)

OPTIONAL EQUIPMENT FOR SERIES 4000 DUMP TRUCK BODY 2/3 CU. YD. (CONTINUED)

OPTION NO.	DESCRIPTION
17	SIGNBOARD, ARROW WANCO MODEL NO. 25SAC VEHICLE MOUNTED, 25 LIGHTS, 36” X 72” PANEL SIZE WITH ELECTRIC ACTUATOR LIFT, MOUNTED (SAP MATERIAL NO. 10024754)
18	TRAILER TOWING PACKAGE, INCLUDING SEVEN-WAY ELECTRICAL CABLE EXTENDED TO REAR OF FRAME FOR STRAIGHT TRUCK APPLICATION (SAP MATERIAL NO. 10024755)
19	SPREADER WITH DOUBLE AUGER MONROE MODEL MS964DA, WARREN MODEL AC620A WITH DUAL AUGER OPTION OR CITY APPROVED EQUAL REAR MOUNTED PTO ACTIVATED TAILGATE SPREADER WITH DUAL AUGER, CAB MOUNTED PEDESTAL CONSOLE CONTROL, HYDRAULIC PUMP OPERATED, 7GAUGE FULL TOP AND BOTTOM OPENING TROUGH WITH HINGED COVER, THREE POSITION SPINNER (LEFT, CENTER & RIGHT), DUAL AUGER WITH REVERSE FLIGHTING, CHAIN DRIVEN, QUICK DISCONNECT COUPLERS, QUICK DETACH HARDWARE TO INCLUDE QD BRACKET & PIN, CLEVIS PIN, HANGAR BAR AND HAIRPIN KEEPER AUGER AND SPINNER MOTORS, HYDRAULICALLY OPERATED, LOW SPEED, HI-TORQUE, MOUNTED ON ADJUSTABLE BRACKETS (SAP MATERIAL NO. 10024756)
20	PAINT BASE COAT IMRON COLOR TO MATCH CAB (SAP MATERIAL NO. 10024757)
21	HITCH, HOLLAND PINTLE MODEL PH-16-B COMBINATION PINTLE HOOK AND 2” BALL HITCH (SAP MATERIAL NO. 10024758)

ITEM NO.	DESCRIPTION
46	**SERIES 875D-LEV84CA CAB & CHASSIS**, REGULAR CAB, 1-TON, 84 INCH CA, DUAL REAR WHEELS, DIESEL, MUST MEET OR EXCEED THE FEDERAL LEV CERTIFICATION, INCLUDING THE FOLLOWING STANDARD EQUIPMENT (SAP MATERIAL NO. 10013306)

MANUFACTURER	**FORD**	**CHEVROLET**
MODEL	F350 SD	C3500HD-CC31403

SPECIFICATION	**MINIMUM REQUIREMENTS**
WHEEL BASE (INCHES)	162
CAB TO AXLE (INCHES)	84
APPROX. PAYLOAD (POUNDS)	5,600
GVWR (POUNDS)	11,200
ENGINE DISPLACEMENT (LITERS)	6.6L V8 DIESEL
ENGINE NET HP	300
ENGINE TORQ	660
TIRE SIZE & LOAD RANGE	MFG. STANDARD
RIM SIZE (INCHES)	MFG. STANDARD

STANDARD EQUIP. NO	DESCRIPTION
1	AIR CONDITIONING INCLUDES OPT. 87
37.1	COLORS, SOLID (OEM STANDARD)
59.1	FUEL TANK(S), 30 GALLON CAPACITY
72	MIRRORS, MANUALLY EXTENDABLE TYPE
77	STEERING, POWER
91	RADIO, AM/FM
107.1	SPARE TIRE AND WHEEL WITH LOCKABLE CARRIER
128	TRANSMISSION, AUTOMATIC
132.1	TRANSMISSION COOLER
144	INTERMITTENT WIPERS
213.2	TRAILER TOWING PACKAGE
241	ANTILOCK BRAKING SYSTEM (OEM STANDARD)
253	CARGO AREA LIGHT

OPTIONAL EQUIPMENT

OPT. NO.	DESCRIPTION
37.4	COLOR: YELLOW: FEDERAL STANDARD 595B, COLOR NO. 13507 (QTY: 1-4 (SAP MATERIAL NO. 10024698)
37.5	COLOR: YELLOW: FEDERAL STANDARD 595B, COLOR NO. 13507 (QTY 5 OR MORE) (SAP MATERIAL NO. 10024699)
45	LIMITED SLIP DIFFERENTIAL (SAP MATERIAL NO. 10013320)
111A	SPOTLIGHT, LEFT SIDE (SAP MATERIAL NO. 10013321)
111.1	DUAL SPOTLIGHTS, LEFT AND RIGHT SIDES (SAP MATERIAL NO. 10024760)

OPT. NO.	DESCRIPTION
223	DIFFERENTIAL RATIO: NORMAL - OPTIONAL RATIO(S) (SAP MATERIAL NO. 10024762)
224.4	STROBE LIGHT, MOUNTED ON ROOF, LOW PROFILE (SAP MATERIAL NO. 10024763)
224.5	ROOF-MOUNTED SPOTLIGHT (SAP MATERIAL NO. 10024765)
224.6	ROOF-MOUNTED SPOTLIGHTS, DUAL (2) (SAP MATERIAL NO. 10024764)
224.7	LIGHTBAR AND SIREN PACKAGE, WHELEN MODEL FREEDOM LED (SAP MATERIAL NO. 10024766)
224.8	LIGHTBAR MINIFREEDOM WHELEN MODEL FT8AAAAP (SAP MATERIAL NO. 10024767)
240	ELECTRONIC ENGINE SPEED CONTROL (SAP MATERIAL NO. 10024768)
249	HOUR METER (SAP MATERIAL NO. 10024769)
251	ELECTRIC BRAKE CONTROLLER (SAP MATERIAL NO. 10024770)

OPTIONAL EQUIPMENT FOR SERIES 875DLEV84CA CAB AND CHASSIS (CONTINUED)

OPTION NO.	DESCRIPTION
A	**SERIES 2006 SERVICE BODY**, REGULAR OR STANDARD TYPE, 132 INCHES LONG TO FIT AN 84 INCH CAB TO AXLE, DUAL REAR WHEEL, CAB & CHASSIS, INCLUDING THE FOLLOWING STANDARD EQUIPMENT (SAP MATERIAL NO. 10013022)

STANDARD EQUIP. NO	DESCRIPTION
2.17	LOCKING WATER COOLER
2.18	TAILGATE, OEM STANDARD
2.26	CLEARANCE LIGHTS
2.27	MUD FLAPS THREE (3) VERTICAL COMPARTMENTS ON EACH SIDE ONE (1) HORIZONTAL COMPARTMENT OVER WHEEL WELL ON EACH SIDE

APPROVED BRANDS

RKI:	L84DW89 (Chevrolet/Dodge)/ L84DW94 (Ford)
READING:	132GADW (Chevrolet)/ 132DADW (Dodge)/ 132FADW (Ford)
KNAPHEIDE:	6132DJ (Chevrolet/Dodge)/ 6132D54J (Ford)
OMAHA:	132DV (Chevrolet/Dodge)/ 132D54V (Ford)
STAHL:	CST134VVD (205925) (Chevrolet) / CST134VVD (206161) (Ford/Dodge)

OPTIONAL EQUIPMENT FOR SERIES 2006 SERVICE BODY:

OPT. NO.	DESCRIPTION
2.1	OVERHEAD LADDER RACKS (SAP MATERIAL NO. 10024771)
2.2	SIDE-MOUNTED LADDER RACKS (Note: Not available with Option 2.20) (SAP MATERIAL NO. 10024772)
2.3	LADDER RACK WITH CONDUIT CARRIER (SAP MATERIAL NO. 10024773)
2.5	VISE RACK WITH PIPE HANGER (SAP MATERIAL NO. 10024774)
2.6	TELESCOPING TOP WITH TAILGATE ENCLOSURE (SAP MATERIAL NO. 10024775)
2.7	REAR BUMPER, MANUFACTURER'S STANDARD 8" WITH TREADPLATE (SAP MATERIAL NO. 10024780)
2.8	REAR BUMPER, MANUFACTURER'S STANDARD 8" WITH "GRIP STRUT" (SAP MATERIAL NO. 10024781)
2.9	REAR BUMPER, MANUFACTURER'S STANDARD 12" WITH TREADPLATE (SAP MATERIAL NO. 10024782)
2.10	REAR BUMPER, MANUFACTURER'S STANDARD 12" WITH "GRIP STRUT" (SAP MATERIAL NO. 10024783)

OPTIONAL EQUIPMENT FOR SERIES 2006 SERVICE BODY (CONTINUED):

OPT. NO.	DESCRIPTION
2.11	CENTRAL LOCKING SYSTEM (SAP MATERIAL NO. 10024784)
2.12	TREADPLATE, 3/16” FOR FLOOR (SAP MATERIAL NO. 10024785)
2.13	ANTI-SLIP COVERING FOR FLOOR (SAP MATERIAL NO. 10024786)
2.14	16 GAUGE TREADPLATE OVERLAY INSIDE OF BODY (SAP MATERIAL NO. 10024787)
2.15	16 GAUGE TREADPLATE OVERLAY TOP OF BODY (SAP MATERIAL NO. 10024788)
2.16	ANTISLIP COVERING FOR OPTION 2.15 (SAP MATERIAL NO. 10024789)
2.19	SIX-WAY CONNECTOR MOUNTED (SAP MATERIAL NO. 10024790)
2.20	TOP-OPENING COMPARTMENT (Note: Not available with Option 2.15) (SAP MATERIAL NO. 10024791)
2.21	CARGO AREA FLOOR MAT, RUBBER (SAP MATERIAL NO. 10024792)
2.22	HEADACHE RACK (SAP MATERIAL NO. 10024793)
2.23	CRANE WITH PLANETARY GEAR WINCH (SAP MATERIAL NO. 10024794)
2.25	THREE-DRAWER STORAGE MODULE (SAP MATERIAL NO. 10024795)

OPTION NO.	DESCRIPTION
B	**SERIES 21004 STATIONARY PLATFORM/STAKE BODY** 144 INCHES LENGTH, 84 INCH CA, 96 INCHES OVERALL TO RUB RAILS (SAP MATERIAL NO. 10013053)

OPTIONAL EQUIPMENT

OPT. NO.	DESCRIPTION
1	STAKE RACK SECTIONS (SAP MATERIAL NO. 10024796)
2	STEEL FLOORING (SAP MATERIAL NO. 10024797)
3	RHINO LININGS TUFF-STUFF ANTISKID COATING ON STEEL FLOOR (SAP MATERIAL NO. 10024798)
4	LIFT GATE (SAP MATERIAL NO. 10024799)
5	BUMPER: ICC BUMPER PER DRAWING “A” 2" BALL (SAP MATERIAL NO. 10024800)
6	BUMPER: ICC BUMPER PER DRAWING “A”, 2-5/16” BALL (SAP MATERIAL NO. 10024801)
7	BUMPER: ICC BUMPER PER DRAWING “B” (SAP MATERIAL NO. 10024802)
8	REPLACEMENT BALL (SAP MATERIAL NO. 10024803)
9	FOUR-WAY ELECTRICAL ROUND CONNECTOR (SAP MATERIAL NO. 10024804)
10	SIX-WAY ELECTRICAL ROUND CONNECTOR (SAP MATERIAL NO. 10024805)
11	SEVEN-WAY ELECTRICAL ROUND CONNECTOR (SAP MATERIAL NO. 10024806)
12.2	UNDER BED BOX 24” LONG, 18” DEPTH, 18” HEIGHT (SAP MATERIAL NO. 10024807)
12.3	UNDER BED BOX 30” LONG, 18” DEPTH, 18” HEIGHT (SAP MATERIAL NO. 10024808)
12.4	UNDER BED BOX 36” LONG, 18” DEPTH, 18” HEIGHT (SAP MATERIAL NO. 10024809)
13	ALL UNDER SIDES COATED (SAP MATERIAL NO. 10024810)

ITEM NO.	DESCRIPTION
47	**SERIES 875D-LEV-CC56CA CAB & CHASSIS,** CREW CAB CONFIGURATION, 1-TON, 56 INCH CA, DUAL REAR WHEELS, DIESEL, MUST MEET OR EXCEED THE FEDERAL LEV CERTIFICATION, INCLUDING THE FOLLOWING STANDARD EQUIPMENT (SAP MATERIAL NO. 10024820)

MANUFACTURER	**FORD**	**CHEVROLET**
MODEL	F350SD	C3500HD CC30943

SPECIFICATION	**MINIMUM REQUIREMENTS**
WHEEL BASE (INCHES)	167
CAB TO AXLE (INCHES)	56
APPROX. PAYLOAD (POUNDS)	5,080
GVWR (POUNDS)	11,200
ENGINE DISPLACEMENT (LITERS)	6.6L
ENGINE NET HP	300
ENGINE TORQ	660
TIRE SIZE & LOAD RANGE	MFG. STANDARD
RIM SIZE (INCHES)	MFG. STANDARD

STANDARD EQUIP. NO	DESCRIPTION
1	AIR CONDITIONING INCLUDES OPT 87
37.1	COLORS, SOLID (OEM STANDARD)
59.1	FUEL TANK(S), 30 GALLON CAPACITY
72	MIRRORS, MANUALLY EXTENDABLE TYPE
77	STEERING, POWER
91	RADIO, AM/FM
107.1	SPARE TIRE AND WHEEL WITH LOCKABLE CARRIER
128	TRANSMISSION, AUTOMATIC
132.1	TRANSMISSION COOLER
144	INTERMITTENT WIPERS
213.2	TRAILER TOWING PACKAGE
241	ANTILOCK BRAKING SYSTEM (OEM STANDARD)
253	CARGO AREA LIGHT

OPTIONAL EQUIPMENT

OPT. NO.	DESCRIPTION
37.4	COLOR: YELLOW: FEDERAL STANDARD 595B, COLOR NO. 13507 (QTY: 1-4) (SAP MATERIAL NO. 10024821)
37.5	COLOR: YELLOW: FEDERAL STANDARD 595B, COLOR NO. 13507 (QTY 5 OR MORE) (SAP MATERIAL NO. 10024822)
45	LIMITED SLIP DIFFERENTIAL (SAP MATERIAL NO. 10024823)
111A	SPOTLIGHT, LEFT SIDE (SAP MATERIAL NO. 10024824)

OPT. NO.	DESCRIPTION
111.1	DUAL SPOTLIGHTS, LEFT AND RIGHT SIDES (SAP MATERIAL NO. 10024825)
223	DIFFERENTIAL RATIO: NORMAL - OPTIONAL RATIO(S) (SAP MATERIAL NO. 10024827)
224.4	STROBE LIGHT, MOUNTED ON ROOF, LOW PROFILE (SAP MATERIAL NO. 10024828)
224.5	ROOF-MOUNTED SPOTLIGHT (SAP MATERIAL NO. 10024830)
224.6	ROOF-MOUNTED SPOTLIGHTS, DUAL (2) (SAP MATERIAL NO. 10024829)
224.7	LIGHTBAR AND SIREN PACKAGE, WHELEN MODEL FREEDOM LED (SAP MATERIAL NO. 10024831)
224.8	LIGHTBAR, MINIFREEDOM, WHELEN MODEL FT8AAAAP (SAP MATERIAL NO. 10024842)
240	ELECTRONIC ENGINE SPEED CONTROL (SAP MATERIAL NO. 10024843)
249	HOUR METER (SAP MATERIAL NO. 10024844)

OPTIONAL EQUIPMENT FOR SERIES 875DLEVCC56CA CAB AND CHASSIS (CONTINUED)

OPT. NO.	DESCRIPTION
A	**SERIES 2004 SERVICE BODY**, REGULAR OR STANDARD TYPE, 96 INCHES LONG TO FIT A 56 INCH CAB TO AXLE, DUAL REAR WHEEL CAB & CHASSIS, INCLUDING THE FOLLOWING STANDARD EQUIPMENT (SAP MATERIAL NO. 10024960)

STANDARD EQUIP. NO	DESCRIPTION
2.17	LOCKING WATER COOLER
2.18	TAILGATE, OEM STANDARD
2.26	CLEARANCE LIGHTS
2.27	MUD FLAPS TWO (2) VERTICAL COMPARTMENTS ON EACH SIDE ONE (1) HORIZONTAL COMPARTMENT OVER WHEEL WELL ON EACH SIDE APPROVED BRANDS RKI MODEL L56DW94 READING MODEL 98ADW KNAPHEIDE 696D54J OMAHA STANDARD 96D54V STAHL CST98VVD

OPTIONAL EQUIPMENT FOR SERIES 2004 SERVICE BODY:

OPT. NO.	DESCRIPTION
2.1	OVERHEAD LADDER RACKS (SAP MATERIAL NO. 10024845)
2.2	SIDE-MOUNTED LADDER RACKS (Note: Not available with Option 2.20) (SAP MATERIAL NO. 10024846)
2.3	LADDER RACK WITH CONDUIT CARRIER (SAP MATERIAL NO. 10024847)
2.5	VISE RACK WITH PIPE HANGER (SAP MATERIAL NO. 10024848)
2.6	TELESCOPING TOP WITH TAILGATE ENCLOSURE (SAP MATERIAL NO. 10024849)
2.7	REAR BUMPER, MANUFACTURER'S STANDARD 8" WITH TREADPLATE (SAP MATERIAL NO. 10024850)
2.8	REAR BUMPER, MANUFACTURER'S STANDARD 8" WITH "GRIP STRUT" (SAP MATERIAL NO. 10024851)
2.9	REAR BUMPER, MANUFACTURER'S STANDARD 12" WITH TREADPLATE (SAP MATERIAL NO. 10024852)
2.10	REAR BUMPER, MANUFACTURER'S STANDARD 12" WITH "GRIP STRUT" (SAP MATERIAL NO. 10024853)

OPTIONAL EQUIPMENT FOR SERIES 2004 SERVICE BODY (CONTINUED):

OPT. NO.	DESCRIPTION
2.11	CENTRAL LOCKING SYSTEM (SAP MATERIAL NO. 10024854)
2.12	TREADPLATE, FLOOR 3/16” (SAP MATERIAL NO. 10024855)
2.13	ANTISLIP FLOOR COVERING (SAP MATERIAL NO. 10024856)
2.14	16 GAUGE TREADPLATE INSIDE OF BODY (SAP MATERIAL NO. 10024857)
2.15	16 GAUGE TREADPLATE TOP OF BODY (SAP MATERIAL NO. 10024858)
2.16	ANTI-SLIP COVERING FOR OPTION 2.15 (SAP MATERIAL NO. 10024859)
2.19	SIX-WAY CONNECTOR MOUNTED (SAP MATERIAL NO. 10024860)
2.20	TOP- OPENING COMPARTMENT (Note: Not available with Option 2.15) (SAP MATERIAL NO. 10024861
2.21	CARGO AREA FLOOR MAT, RUBBER (SAP MATERIAL NO. 10024862)
2.22	HEADACHE RACK (SAP MATERIAL NO. 10024863)
2.23	CRANE WITH PLANETARY GEAR WINCH (SAP MATERIAL NO. 10024864)
2.25	THREE-DRAWER STORAGE MODULE (SAP MATERIAL NO. 10024865)

ITEM NO.	DESCRIPTION
48	**SERIES 875D-LEV-CC60CA CAB & CHASSIS,** CREW CAB CONFIGURATION, 1-TON, 60 INCH CA, DUAL REAR WHEELS, DIESEL, MUST MEET OR EXCEED THE FEDERAL LEV CERTIFICATION, INCLUDING THE FOLLOWING STANDARD EQUIPMENT (SAP MATERIAL NO. 10023170)

MANUFACTURER	**FORD**	**CHEVROLET**	**DODGE**
MODEL	F350SD	3500HD CC31043	3500CC

SPECIFICATION	**MINIMUM REQUIREMENTS**
WHEEL BASE (INCHES)	171
CAB TO AXLE (INCHES)	60
APPROX. PAYLOAD (POUNDS)	6,000
GVWR (POUNDS)	13,000
ENGINE DISPLACEMENT (LITERS)	6.6L DIESEL
ENGINE NET HP	300
ENGINE TORQ	610
TIRE SIZE & LOAD RANGE	DUAL REAR, MFG. STANDARD
RIM SIZE (INCHES)	MFG. STANDARD

STANDARD EQUIP. NO	DESCRIPTION
1	AIR CONDITIONING INCLUDES OPT. 87
37.1	SOLID COLORS, O.E.M. STANDARD
59.1	FUEL TANK(S), 30 GALLON CAPACITY
72	MIRRORS, MANUALLY EXTENDABLE TYPE
77	STEERING, POWER
91	RADIO, AM/FM
107.1	SPARE TIRE AND WHEEL WITH LOCKABLE CARRIER
128	TRANSMISSION, AUTOMATIC
132.1	TRANSMISSION COOLER
144	INTERMITTENT WIPERS
213.2	TRAILER TOWING PACKAGE
241	ANTILOCK BRAKING SYSTEM (OEM STANDARD)
253	CARGO AREA LIGHT

OPTIONAL EQUIPMENT:

OPT. NO.	DESCRIPTION
37.4	COLOR: YELLOW: FEDERAL STANDARD 595B, COLOR NO. 13507 (QTY: 1-4) (SAP MATERIAL NO. 10025399)
37.5	COLOR: YELLOW: FEDERAL STANDARD 595B, COLOR NO. 13507 (QTY: 5 OR MORE) (SAP MATERIAL NO. 10025560)

OPT. NO	DESCRIPTION
45	DIFFERENTIAL, LIMITED-SLIP TRACTION TYPE (SAP MATERIAL NO. 10025561)
111A	SPOTLIGHT, LEFT SIDE (SAP MATERIAL NO. 10025562)
111.1	SPOTLIGHTS, DUAL, LEFT AND RIGHT SIDES (SAP MATERIAL NO. 10025563)
223	DIFFERENTIAL RATIO: NORMAL - OPTIONAL RATIO(S) (SAP MATERIAL NO. 10025565)
224.4	STROBE LIGHT, LOW PROFILE (SAP MATERIAL NO. 10025566)
224.5	ROOF-MOUNTED SPOTLIGHT (SAP MATERIAL NO. 10025567)
224.6	ROOF-MOUNTED SPOTLIGHTS, DUAL (2) (SAP MATERIAL NO. 10025568)
224.7	LIGHTBAR AND SIREN PACKAGE, WHELEN MODEL FREEDOM LED (SAP MATERIAL NO. 10025569)
224.8	LIGHTBAR, MINIFREEDOM, WHELEN MODEL FT8AAAAP (SAP MATERIAL NO. 10025570)
240	ELECTRONIC ENGINE IDLE SPEED CONTROL (SAP MATERIAL NO. 10025571)
249	HOUR METER (SAP MATERIAL NO. 10025572)
251	ELECTRIC BRAKE CONTROLLER (SAP MATERIAL NO. 10024613)

OPTIONAL EQUIPMENT FOR SERIES 875D-LEV CC60CA CAB AND CHASSIS (CONTINUED)

OPTION NO.	DESCRIPTION
B	**SERIES 21001 STATIONARY PLATFORM/STAKE BODY**, 112 INCHES LENGTH, 60 INCH CA, 96 INCHES OVERALL TO RUB RAILS (SAP MATERIAL NO. 10023171)

OPTIONAL EQUIPMENT FOR SERIES 21001 STAKE BODY

OPT. NO.	DESCRIPTION
1	STAKE RACK SECTIONS (SAP MATERIAL NO. 10025574)
2	STEEL FLOORING (SAP MATERIAL NO. 10025575)
3	RHINO LININGS TUFF-STUFF ANTISKID COATING ON STEEL FLOOR (SAP MATERIAL NO. 10025576)
4	LIFT GATE (SAP MATERIAL NO. 10025577)
4.1	HYDRAULIC LIFT GATE (SAP MATERIAL NO. 10025552)
5	BUMPER: ICC BUMPER PER DRAWING “A” 2" BALL (SAP MATERIAL NO. 10025554)
6	BUMPER: ICC BUMPER PER DRAWING “A”, 2-5/16” BALL (SAP MATERIAL NO. 10025555)
7	BUMPER: ICC BUMPER PER DRAWING “B” (SAP MATERIAL NO. 10025556)
8	REPLACEMENT BALL (SAP MATERIAL NO. 10025557)
9	FOUR-WAY ELECTRICAL ROUND CONNECTOR (SAP MATERIAL NO. 10025558)
10	SIX-WAY ELECTRICAL ROUND CONNECTOR (SAP MATERIAL NO. 10025559)
11	SEVEN-WAY ELECTRICAL ROUND CONNECTOR (SAP MATERIAL NO. 10025580)
12.2	UNDER BED BOX, 24” LONG, 18” DEPTH, 18” HEIGHT (SAP MATERIAL NO. 10025581)
12.3	UNDER BED BOX, 30” LONG, 18” DEPTH, 18” HEIGHT (SAP MATERIAL NO. 10025582)
12.4	UNDER BED BOX, 36” LONG, 18” DEPTH, 18” HEIGHT (SAP MATERIAL NO. 10025583
13	ALL UNDER SIDES COATED (SAP MATERIAL NO. 10025584)
14	RUMBER FLOORING (SAP MATERIAL NO. 10025585)

ITEM NO.	DESCRIPTION
49	**SERIES 930G-LEV60CA CAB & CHASSIS**, REGULAR CAB, 1-1/4–TON, 60 INCH CA, DUAL REAR WHEELS, GASOLINE, MUST MEET OR EXCEED THE FEDERAL LEV CERTIFICATION INCLUDING THE FOLLOWING STANDARD EQUIPMENT (SAP MATERIAL NO. 10013344)

MANUFACTURER	**FORD**
MODEL	F450 SD

SPECIFICATION	**MINIMUM REQUIREMENTS**
WHEEL BASE (INCHES)	141
CAB TO AXLE (INCHES)	60
APPROX. PAYLOAD (POUNDS)	8,615
GVWR (POUNDS)	15,000
ENGINE DISPLACEMENT (LITERS)	6.8L V10
ENGINE NET HP	362
ENGINE TORQ	457
TIRE SIZE & LOAD RANGE	MFG. STANDARD
RIM SIZE (INCHES)	MFG. STANDARD

STANDARD EQUIP. NO	DESCRIPTION
1	AIR CONDITIONING INCLUDES OPT. 87
37.1	SOLID COLORS, O.E.M. STANDARD
59.3	FUEL TANK(S), 25 GALLON CAPACITY
72	MIRRORS, MANUALLY EXTENDABLE TYPE
77	STEERING, POWER
91	RADIO, AM/FM
107.1	SPARE TIRE AND WHEEL WITH LOCKABLE CARRIER
128	AUTOMATIC TRANSMISSION
213.2	TRAILER TOWING PACKAGE
241	ANTILOCK BRAKING SYSTEM (OEM STANDARD)
247	CAB STEPS FOR ALL DOORS

OPTIONAL EQUIPMENT:

OPT. NO.	DESCRIPTION
37.4	COLOR: YELLOW: FEDERAL STANDARD 595B, COLOR NO. 13507 (QTY: 1-4) (SAP MATERIAL NO. 10024495)
37.5	COLOR: YELLOW: FEDERAL STANDARD 595B, COLOR NO. 13507 (QTY: 5 OR MORE) (SAP MATERIAL NO. 10024496)
63	GRILL GUARD (SAP MATERIAL NO. 10024497)

OPT. NO	DESCRIPTION
128.1	AUTOMATIC TRANSMISSION WITH PTO PROVISION (SAP MATERIAL NO. 10024498)
132.1	TRANSMISSION COOLER (SAP MATERIAL NO. 10024529)
223	DIFFERENTIAL RATIO: NORMAL - OPTIONAL RATIO(S) (SAP MATERIAL NO. 10024601)
224.4	STROBE LIGHT, LOW PROFILE (SAP MATERIAL NO. 10024602)
224.5	ROOF-MOUNTED SPOTLIGHT (SAP MATERIAL NO. 10024610)
224.6	ROOF-MOUNTED SPOTLIGHTS, DUAL (2) (SAP MATERIAL NO. 10024499)
224.7	LIGHTBAR AND SIREN PACKAGE, WHELEN MODEL FREEDOM LED (SAP MATERIAL NO. 10024611)
224.8	LIGHTBAR, MINIFREEDOM, WHELEN MODEL FT8AAAAP (SAP MATERIAL NO. 10024612)
251	ELECTRIC BRAKE CONTROLLER (SAP MATERIAL NO. 10024613)

OPTIONAL EQUIPMENT SERIES 930GLEV60CA CAB AND CHASSIS (CONTINUED)

OPTION. NO.	DESCRIPTION
A	**SERIES 2005 SERVICE BODY**, REGULAR OR STANDARD TYPE, 108 INCHES LONG TO FIT A 60 INCH CAB TO AXLE, DUAL REAR WHEEL CAB & CHASSIS, INCLUDING THE FOLLOWING STANDARD EQUIPMENT (SAP MATERIAL NO. 10013012)

STANDARD EQUIP. NO	DESCRIPTION
2.17	LOCKING WATER COOLER
2.18	TAILGATE, OEM STANDARD
2.26	CLEARANCE LIGHTS
2.27	MUD FLAPS TWO (2) VERTICAL COMPARTMENTS ON EACH SIDE ONE (1) HORIZONTAL COMPARTMENT OVER WHEEL WELL ON EACH SIDE

APPROVED BRANDS

RKI:	L60DW89 (Chevrolet/Dodge)/ L60DW94 (Ford)
READING:	108GADW (Chevrolet)/ 108DADW (Dodge)/ 108FADW (Ford)
KNAPHEIDE:	6108DJ (Chevrolet/Dodge)/ 6108D54J (Ford)
OMAHA:	108DV (Chevrolet/Dodge)/ 108D54V (Ford)
STAHL:	CST110VVD (205908) (Chevrolet) / CST110VVD (205916) (Ford/Dodge)

OPTIONAL EQUIPMENT FOR SERIES 2005 SERVICE BODY:

OPT. NO.	DESCRIPTION
2.1	OVERHEAD LADDER RACKS (SAP MATERIAL NO. 10024614)
2.2	SIDE-MOUNTED LADDER RACKS (Note: Not available with Option 2.20) (SAP MATERIAL NO. 10024615)
2.3	LADDER RACK WITH CONDUIT CARRIER (SAP MATERIAL NO. 10024621)
2.5	VISE RACK WITH PIPE HANGER (SAP MATERIAL NO. 10024622)
2.6	TELESCOPING TOP WITH TAILGATE ENCLOSURE (SAP MATERIAL NO. 10024623)
2.7	REAR BUMPER, MANUFACTURER'S STANDARD 8" WITH TREADPLATE (SAP MATERIAL NO. 10024624)
2.8	REAR BUMPER, MANUFACTURER'S STANDARD 8" WITH "GRIP STRUT" (SAP MATERIAL NO. 10024625)
2.9	REAR BUMPER, MANUFACTURER'S STANDARD 12" WITH TREADPLATE (SAP MATERIAL NO. 10024626)
2.10	REAR BUMPER, MANUFACTURER'S STANDARD 12" WITH "GRIP STRUT" (SAP MATERIAL NO. 10024643)

OPTIONAL EQUIPMENT FOR SERIES 2005 SERVICE BODY (CONTINUED)

OPT. NO.	DESCRIPTION
2.11	CENTRAL LOCKING SYSTEM (SAP MATERIAL NO. 10024644)
2.12	TREADPLATE, 3/16” FOR FLOOR (SAP MATERIAL NO. 10024645)
2.13	ANTISLIP COVERING FOR FLOOR (SAP MATERIAL NO. 10024646)
2.14	16 GAUGE TREADPLATE OVERLAY INSIDE OF BODY (SAP MATERIAL NO. 10024647)
2.15	16 GAUGE TREADPLATE OVERLAY TOP OF BODY (SAP MATERIAL NO. 10024648)
2.16	ANTISLIP COVERING FOR OPTION 2.15 (SAP MATERIAL NO. 10024649)
2.19	SIX-WAY CONNECTOR MOUNTED (SAP MATERIAL NO. 10024690)
2.20	TOP- OPENING COMPARTMENT (Note: Not available with Option 2.15) (SAP MATERIAL NO. 10024691)
2.21	CARGO AREA FLOOR MAT, RUBBER (SAP MATERIAL NO. 10024692)
2.22	HEADACHE RACK (SAP MATERIAL NO. 10024693)
2.23	CRANE WITH PLANETARY GEAR WINCH (SAP MATERIAL NO. 10024694)
2.25	THREE-DRAWER STORAGE MODULE (SAP MATERIAL NO. 10024695)

OPTIONAL EQUIPMENT FOR SERIES 930GLEV60CA CAB AND CHASSIS (CONTINUED)

OPTION NO.	DESCRIPTION
B	**SERIES 21001 STATIONARY PLATFORM/STAKE BODY**, 112 INCHES LENGTH, 60 INCH CA, 96 INCHES OVERALL TO RUB RAILS (SAP MATERIAL NO. 10025291)

OPTIONAL EQUIPMENT FOR SERIES 21001 STAKE BODY

OPT. NO.	DESCRIPTION
1	STAKE RACK SECTIONS (SAP MATERIAL NO. 10025292)
2	STEEL FLOORING (SAP MATERIAL NO. 10025293)
3	RHINO LININGS TUFF-STUFF ANTISKID COATING ON STEEL FLOOR (SAP MATERIAL NO. 10025294)
4	LIFT GATE (SAP MATERIAL NO. 10025295)
5	BUMPER: ICC BUMPER PER DRAWING “A” 2" BALL (SAP MATERIAL NO. 10025296)
6	BUMPER: ICC BUMPER PER DRAWING “A”, 2-5/16” BALL (SAP MATERIAL NO. 10025297)
7	BUMPER: ICC BUMPER PER DRAWING “B” (SAP MATERIAL NO. 10025298)
8	REPLACEMENT BALL (SAP MATERIAL NO. 10025299)
9	FOUR-WAY ELECTRICAL ROUND CONNECTOR (SAP MATERIAL NO. 10025380)
10	SIX-WAY ELECTRICAL ROUND CONNECTOR (SAP MATERIAL NO. 10025381)
11	SEVEN-WAY ELECTRICAL ROUND CONNECTOR (SAP MATERIAL NO. 10025382)
12.2	UNDER BED BOX, 24” LONG, 18” DEPTH, 18” HEIGHT (SAP MATERIAL NO. 10025383)
12.3	UNDER BED BOX, 30” LONG, 18” DEPTH, 18” HEIGHT (SAP MATERIAL NO. 10025384)
12.4	UNDER BED BOX, 36” LONG, 18” DEPTH, 18” HEIGHT (SAP MATERIAL NO. 1025385)
13	ALL UNDER SIDES COATED (SAP MATERIAL NO. 10025386)

ITEM NO.	DESCRIPTION

50 **SERIES 930G-LEV-84CA CAB & CHASSIS**, REGULAR CAB
1-1/4–TON, 84 INCH CA, DUAL REAR WHEELS,
GASOLINE, MUST MEET OR EXCEED THE FEDERAL LEV
CERTIFICATION, INCLUDING THE FOLLOWING
STANDARD EQUIPMENT
(SAP MATERIAL NO. 10013345)

MANUFACTURER	**FORD**
MODEL	F450 SD

SPECIFICATION	**MINIMUM REQUIREMENTS**
WHEEL BASE (INCHES)	165
CAB TO AXLE (INCHES)	84
APPROX. PAYLOAD (POUNDS)	8,615
GVWR (POUNDS)	15,000
ENGINE DISPLACEMENT (LITERS)	6.8L V10
ENGINE NET HP	362
ENGINE TORQ	457
TIRE SIZE & LOAD RANGE	MFG. STANDARD
RIM SIZE (INCHES)	MFG. STANDARD

STANDARD

EQUIP. NO	DESCRIPTION
1	AIR CONDITIONING INCLUDES OPT. 87
37.1	COLORS, SOLID (OEM STANDARD)
59.3	FUEL TANK(S), 25 GALLON CAPACITY
72	MIRRORS, MANUALLY EXTENDABLE TYPE
77	STEERING, POWER
91	RADIO, AM/FM
107.1	SPARE TIRE AND WHEEL WITH LOCKABLE CARRIER
128	AUTOMATIC TRANSMISSION
213.2	TRAILER TOWING PACKAGE
241	ANTILOCK BRAKING SYSTEM (OEM STANDARD)
247	CAB STEPS FOR ALL DOORS

OPTIONAL EQUIPMENT

OPT. NO.	DESCRIPTION

37.4 COLOR: YELLOW: FEDERAL STANDARD 595B, COLOR
NO. 13507 (QTY: 1-4)
(SAP MATERIAL NO. 10025387)

37.5 COLOR: YELLOW: FEDERAL STANDARD 595B, COLOR
NO. 13507 (QTY 5 OR MORE)
(SAP MATERIAL NO. 10025388)

63 GRILL GUARD
(SAP MATERIAL NO.10025389)

OPT. NO.	DESCRIPTION
128.1	TRANSMISSION, AUTOMATIC WITH PTO PROVISION (SAP MATERIAL NO. 10025390)
129	AUXILIARY IDLE CONTROL KIT (SAP MATERIAL NO. 10025391)
132.1	TRANSMISSION COOLER (SAP MATERIAL NO. 10013355)
136.1	EXTENDED WARRANTY (SAP MATERIAL NO. 10025392)
223	DIFFERENTIAL RATIO: NORMAL - OPTIONAL RATIO(S) (SAP MATERIAL NO. 10025393)
224.4	STROBE LIGHT, MOUNTED ON ROOF, LOW PROFILE (SAP MATERIAL NO. 10013352)
224.5	ROOF-MOUNTED SPOTLIGHT (SAP MATERIAL NO. 10025394)
224.6	ROOF-MOUNTED SPOTLIGHTS, DUAL (2) (SAP MATERIAL NO. 10025395)
224.7	LIGHTBAR AND SIREN PACKAGE, WHELEN MODEL FREEDOM LED (SAP MATERIAL NO. 10025396)
224.8	LIGHTBAR, MINIFREEDOM, WHELEN MODEL FT8AAAAP (SAP MATERIAL NO. 10025308)
251	ELECTRIC BRAKE CONTROLLER (SAP MATERIAL NO. 10025309)

OPTIONAL EQUIPMENT FOR SERIES 930GLEV84CA CAB AND CHASSIS (CONTINUED)

OPTION NO.	DESCRIPTION
A	**SERIES 2006 SERVICE BODY**, REGULAR OR STANDARD TYPE, 132 INCHES LONG TO FIT AN 84 INCH CAB TO AXLE, DUAL REAR WHEEL, CAB & CHASSIS, INCLUDING THE FOLLOWING STANDARD EQUIPMENT (SAP MATERIAL NO. 10013029)

STANDARD EQUIP. NO	DESCRIPTION
2.17	LOCKING WATER COOLER
2.18	TAILGATE, OEM STANDARD
2.26	CLEARANCE LIGHTS
2.27	MUD FLAPS THREE (3) VERTICAL COMPARTMENTS ON EACH SIDE ONE (1) HORIZONTAL COMPARTMENT OVER WHEEL WELL ON EACH SIDE

APPROVED BRANDS

RKI:	L84DW89 (Chevrolet/Dodge)/ L84DW94 (Ford)
READING:	132GADW (Chevrolet)/ 132DADW (Dodge)/ 132FADW (Ford)
KNAPHEIDE:	6132DJ (Chevrolet/Dodge)/ 6132D54J (Ford)
OMAHA:	132DV (Chevrolet/Dodge)/ 132D54V (Ford)
STAHL:	CST134VVD (205925) (Chevrolet) / CST134VVD (206161) (Ford/Dodge)

OPTIONAL EQUIPMENT FOR SERIES 2006 SERVICE BODY:

OPT. NO.	DESCRIPTION
2.1	OVERHEAD LADDER RACKS (SAP MATERIAL NO. 10025400)
2.2	SIDE- MOUNTED LADDER RACKS (Note: Not available with Option 2.20) (SAP MATERIAL NO. 10025401)
2.3	LADDER RACK WITH CONDUIT CARRIER (SAP MATERIAL NO. 10013031)
2.5	VISE RACK WITH PIPE HANGER (SAP MATERIAL NO. 10025403)
2.6	TELESCOPING TOP WITH TAILGATE ENCLOSURE (SAP MATERIAL NO. 10025404
2.7	REAR BUMPER, MANUFACTURER'S STANDARD 8" WITH TREADPLATE (SAP MATERIAL NO. 10025405)
2.8	REAR BUMPER, MANUFACTURER'S STANDARD 8" WITH "GRIP STRUT (SAP MATERIAL NO. 10025406)
2.9	REAR BUMPER, MANUFACTURER'S STANDARD 12" WITH TREADPLATE (SAP MATERIAL NO. 10013032)
2.10	REAR BUMPER, MANUFACTURER'S STANDARD 12" WITH "GRIP STRUT (SAP MATERIAL NO. 10025407)

OPTIONAL EQUIPMENT FOR SERIES 2006 SERVICE BODY (CONTINUED):

OPT. NO.	DESCRIPTION
2.11	CENTRAL LOCKING SYSTEM (SAP MATERIAL NO. 10013030)
2.12	TREADPLATE, 3/16” FOR FLOOR (SAP MATERIAL NO. 10025408)
2.13	ANTISLIP COVERING FOR FLOOR (SAP MATERIAL NO. 10025409)
2.14	16 GAUGE TREADPLATE OVERLAY-INSIDE OF BODY (SAP MATERIAL NO. 10025410)
2.15	16 GAUGE TREADPLATE OVERLAY-TOP OF BODY (SAP MATERIAL NO. 10025411)
2.16	ANTI-SLIP COVERING FOR OPTION 2.15 (SAP MATERIAL NO. 10025412)
2.19	SIX-WAY CONNECTOR MOUNTED (SAP MATERIAL NO. 10013033)
2.20	TOP-OPENING COMPARTMENT (Note: Not available with Option 2.15) (SAP MATERIAL NO. 10025413)
2.21	CARGO AREA FLOOR MAT, RUBBER (SAP MATERIAL NO. 10025414)
2.22	HEADACHE RACK (SAP MATERIAL NO. 10025415)
2.23	CRANE WITH PLANETARY GEAR WINCH (SAP MATERIAL NO. 10025416)
2.25	THREE-DRAWER STORAGE MODULE (SAP MATERIAL NO. 10025417)

OPTION NO.	DESCRIPTION
B	**SERIES 21004 STATIONARY PLATFORM/STAKE BODY** 144 INCHES LENGTH, 84 INCH CA, 96 INCHES OVERALL TO RUB RAILS (SAP MATERIAL NO. 10025418)

OPTIONAL EQUIPMENT

OPT. NO.	DESCRIPTION
1	STAKE RACK SECTIONS (SAP MATERIAL NO. 10025419)
2	STEEL FLOORING (SAP MATERIAL NO. 10025420)
3	RHINO LININGS TUFF-STUFF ANTISKID COATING ON STEEL FLOOR (SAP MATERIAL NO. 10025421)
4	LIFT GATE (SAP MATERIAL NO. 10025422)
5	BUMPER: ICC BUMPER PER DRAWING “A” 2" BALL (SAP MATERIAL NO. 10025423)
6	BUMPER: ICC BUMPER PER DRAWING “A”, 25/16” BALL (SAP MATERIAL NO. 10025424)
7	BUMPER: ICC BUMPER PER DRAWING “B” (SAP MATERIAL NO. 10025425)
8	REPLACEMENT BALL (SAP MATERIAL NO. 10025426)

OPTIONAL EQUIPMENT FOR SERIES 930GLEV84CA CAB AND CHASSIS (CONTINUED)

OPTIONAL EQUIPMENT FOR SERIES 21004 STAKE BODY (CONTINUED)

OPT. NO.	DESCRIPTION
9	FOUR-WAY ELECTRICAL ROUND CONNECTOR (SAP MATERIAL NO. 10025427)
10	SIX-WAY ELECTRICAL ROUND CONNECTOR (SAP MATERIAL NO. 10025428)
11	SEVEN-WAY ELECTRICAL ROUND CONNECTOR (SAP MATERIAL NO. 10025429)
12.2	UNDER BED BOX, 24” LONG, 18” DEPTH, 18” HEIGHT (SAP MATERIAL NO. 10025430)
12.3	UNDER BED BOX, 30” LONG, 18” DEPTH, 18” HEIGHT (SAP MATERIAL NO. 10025431)
12.4	UNDER BED BOX, 36” LONG, 18” DEPTH, 18” HEIGHT (SAP MATERIAL NO. 10025432)
13	ALL UNDER SIDES COATED (SAP MATERIAL NO. 10025433)

ITEM NO.	DESCRIPTION

51 **SERIES 930G-LEV-CC60CA CAB & CHASSIS,** CREW CAB CONFIGURATION, 1-1/4–TON, 60 INCH CA, DUAL REAR WHEELS, GASOLINE, MUST MEET OR EXCEED THE FEDERAL LEV CERTIFICATION, INCLUDING THE FOLLOWING STANDARD EQUIPMENT
(SAP MATERIAL NO. 10013346)

MANUFACTURER	**FORD**
MODEL	F450SD CREW CAB

SPECIFICATION	**MINIMUM REQUIREMENTS**
WHEEL BASE (INCHES)	176
CAB TO AXLE (INCHES)	60
APPROX. PAYLOAD (POUNDS)	8,175
GVWR (POUNDS)	15,000
ENGINE DISPLACEMENT (LITERS)	6.8L V10
ENGINE NET HP	362
ENGINE TORQ	457
TIRE SIZE & LOAD RANGE	MFG. STANDARD
RIM SIZE (INCHES)	MFG. STANDARD

STANDARD EQUIP. NO	DESCRIPTION
1	AIR CONDITIONING INCLUDES OPT 87
37.1	COLORS, SOLID (OEM STANDARD)
59.3	FUEL TANK(S), 25 GALLON CAPACITY
72	MIRRORS, MANUALLY EXTENDABLE TYPE
77	STEERING POWER
91	RADIO, AM/FM
107.1	SPARE TIRE AND WHEEL WITH LOCKABLE CARRIER
128	AUTOMATIC TRANSMISSION
213.2	TRAILER TOWING PACKAGE
241	ANTILOCK BRAKING SYSTEM (OEM STANDARD)
247	CAB STEPS FOR ALL DOORS

OPTIONAL EQUIPMENT

OPT. NO.	DESCRIPTION
37.4	COLOR: YELLOW: FEDERAL STANDARD 595B, COLOR NO. 13507 (QTY: 1-4) (SAP MATERIAL NO. 10024872)
37.5	COLOR: YELLOW: FEDERAL STANDARD 595B, COLOR NO. 13507 (QTY 5 OR MORE) (SAP MATERIAL NO. 10024873)
63	GRILL GUARD (SAP MATERIAL NO. 10024874)
128.1	TRANSMISSION, AUTOMATIC WITH PTO PROVISION (SAP MATERIAL NO. 10024875)

OPT. NO.	DESCRIPTION
132.1	TRANSMISSION COOLER (SAP MATERIAL NO. 10024876)
223	DIFFERENTIAL RATIO: NORMAL - OPTIONAL RATIO(S) (SAP MATERIAL NO. 10024878)
224.4	STROBE LIGHT, MOUNTED ON ROOF, LOW PROFILE (SAP MATERIAL NO. 10024879)
224.5	ROOF-MOUNTED SPOTLIGHT (SAP MATERIAL NO. 10024891)
224.6	ROOF-MOUNTED SPOTLIGHTS, DUAL (2) (SAP MATERIAL NO. 10024890)
224.7	LIGHTBAR AND SIREN PACKAGE WHELEN MODEL FREEDOM LED (SAP MATERIAL NO. 10024892)
224.8	LIGHTBAR, MINIFREEDOM, WHELEN MODEL FT8AAAAP (SAP MATERIAL NO. 10024893)
251	ELECTRIC BRAKE CONTROLLER (SAP MATERIAL NO. 10024894)

OPTIONAL EQUIPMENT FOR SERIES 930GLEVCC60CA CAB AND CHASSIS (CONTINUED)

OPTION NO.	DESCRIPTION
A	**SERIES 2005 SERVICE BODY**, REGULAR OR STANDARD TYPE, 108 INCHES LONG TO FIT A 60 INCH CAB TO AXLE, DUAL REAR WHEEL CAB & CHASSIS, INCLUDING THE FOLLOWING STANDARD EQUIPMENT (SAP MATERIAL NO. 10013006)

STANDARD EQUIP. NO	DESCRIPTION
2.17	LOCKING WATER COOLER
2.18	TAILGATE, OEM STANDARD
2.26	CLEARANCE LIGHTS
2.27	MUD FLAPS TWO (2) VERTICAL COMPARTMENTS ON EACH SIDE ONE (1) HORIZONTAL COMPARTMENT OVER WHEEL WELL ON EACH SIDE

APPROVED BRANDS

RKI:	L60DW89 (Chevrolet/Dodge)/ L60DW94 (Ford)
READING:	108GADW (Chevrolet)/ 108DADW (Dodge)/ 108FADW (Ford)
KNAPHEIDE:	6108DJ (Chevrolet/Dodge)/ 6108D54J (Ford)
OMAHA:	108DV (Chevrolet/Dodge)/ 108D54V (Ford)
STAHL:	CST110VVD (205908) (Chevrolet) / CST110VVD (205916) (Ford/Dodge)

OPTIONAL EQUIPMENT FOR SERIES 2005 SERVICE BODY:

OPT. NO.	DESCRIPTION
2.1	OVERHEAD LADDER RACKS (SAP MATERIAL NO. 10024895)
2.2	SIDE-MOUNTED LADDER RACKS (Note: Not available with Option 2.20) (SAP MATERIAL NO. 10024896)
2.3	LADDER RACK WITH CONDUIT CARRIER (SAP MATERIAL NO. 10024897)
2.5	VISE RACK WITH PIPE HANGER (SAP MATERIAL NO. 10024898)
2.6	TELESCOPING TOP WITH TAILGATE ENCLOSURE (SAP MATERIAL NO. 10024899)
2.7	REAR BUMPER, MANUFACTURER'S STANDARD 8" TREADPLATE (SAP MATERIAL NO. 10024900)
2.8	REAR BUMPER, MANUFACTURER'S STANDARD 8" WITH "GRIP STRUT (SAP MATERIAL NO. 10024901)

OPTIONAL EQUIPMENT FOR SERIES 930GLEVCC60CA CAB AND CHASSIS (CONTINUED)

OPTIONAL EQUIPMENT FOR SERIES 2005 SERVICE BODY (CONTINUED)

OPT. NO.	DESCRIPTION
2.9	REAR BUMPER, MANUFACTURER'S STANDARD 12" WITH TREADPLATE (SAP MATERIAL NO. 10024902)
2.10	REAR BUMPER, MANUFACTURER'S STANDARD 12" WITH "GRIP STRUT (SAP MATERIAL NO. 10024903)
2.11	CENTRAL LOCKING SYSTEM (SAP MATERIAL NO. 10024904)
2.12	TREADPLATE, 3/16" FOR FLOOR (SAP MATERIAL NO. 10024905)
2.13	ANTI SLIP COVERING FOR FLOOR (SAP MATERIAL NO. 10024906)
2.14	16 GAUGE TREADPLATE OVERLAY INSIDE OF BODY (SAP MATERIAL NO. 10024907)
2.15	16 GAUGE TREADPLATE OVERLAY TOP OF BODY (SAP MATERIAL NO. 10024908)
2.16	ANTI-SLIP COVERING FOR OPTION 2.15 (SAP MATERIAL NO. 10024909)
2.19	SIX-WAY CONNECTOR MOUNTED (SAP MATERIAL NO. 10024910)
2.20	TOP- OPENING COMPARTMENT (Note: Not available with Option 2.15) (SAP MATERIAL NO. 10024911)
2.21	CARGO AREA FLOOR MAT, RUBBER (SAP MATERIAL NO. 10024912)
2.22	HEADACHE RACK (SAP MATERIAL NO. 10024913)
2.23	CRANE WITH PLANETARY GEAR WINCH (SAP MATERIAL NO. 10024914)
2.25	THREE-DRAWER STORAGE MODULE (SAP MATERIAL NO. 10024915)

OPTIONAL EQUIPMENT FOR SERIES 930GLEVCC60CA CAB AND CHASSIS (CONTINUED)

OPTION NO.	DESCRIPTION
B	**SERIES 21001 STATIONARY PLATFORM/STAKE BODY**, 112 INCHES LENGTH, 60 INCH CA, 96 INCHES OVERALL TO RUB RAILS (SAP MATERIAL NO. 10025070)

OPTIONAL EQUIPMENT FOR SERIES 21001 STAKE BODY

OPT. NO.	DESCRIPTION
1	STAKE RACK SECTIONS (SAP MATERIAL NO. 10025071)
2	STEEL FLOORING (SAP MATERIAL NO. 10025072)
3	RHINO LININGS TUFF-STUFF ANTISKID COATING ON STEEL FLOOR (SAP MATERIAL NO. 10025073)
4	LIFT GATE (SAP MATERIAL NO. 10025074)
4.1	HYDRAULIC LIFT GATE TOMMY GATE RAILGATE MODEL 8920A (SAP MATERIAL NO. 10025075)
5	BUMPER: ICC BUMPER PER DRAWING “A” 2" BALL (SAP MATERIAL NO. 10025076)
6	BUMPER: ICC BUMPER PER DRAWING “A”, 25/16” BALL (SAP MATERIAL NO. 10025077)
7	BUMPER: ICC BUMPER PER DRAWING “B” (SAP MATERIAL NO. 10025078)
8	REPLACEMENT BALL (SAP MATERIAL NO. 10025079)
9	FOUR-WAY ELECTRICAL ROUND CONNECTOR (SAP MATERIAL NO. 10025080)
10	SIX-WAY ELECTRICAL ROUND CONNECTOR (SAP MATERIAL NO. 10025081)
11	SEVEN-WAY ELECTRICAL ROUND CONNECTOR (SAP MATERIAL NO. 10025082)
12.2	UNDER BED BOX, 24” LONG, 18” DEPTH, 18” HEIGHT (SAP MATERIAL NO. 10025083)
12.3	UNDER BED BOX, 30” LONG, 18” DEPTH, 18” HEIGHT (SAP MATERIAL NO. 10025084)
12.4	UNDER BED BOX, 36” LONG, 18” DEPTH, 18” HEIGHT (SAP MATERIAL NO. 10025085)
13	ALL UNDER SIDES COATED (SAP MATERIAL NO. 10025086)

ITEM NO.	DESCRIPTION
52	**SERIES 930D-LEV-60CA CAB & CHASSIS**, REGULAR CAB, 1-1/4-TON, 60 INCH CA, DUAL REAR WHEELS, DIESEL, MUST MEET OR EXCEED THE FEDERAL LEV CERTIFICATION, INCLUDING THE FOLLOWING STANDARD EQUIPMENT (SAP MATERIAL NO. 10013332)

MANUFACTURER	**FORD**
MODEL	F450 SD

SPECIFICATION	**MINIMUM REQUIREMENTS**
WHEEL BASE (INCHES)	141
CAB TO AXLE (INCHES)	60
APPROX. PAYLOAD (POUNDS)	8,100
GVWR (POUNDS)	15,000
ENGINE DIS PLACEMENT (LITRES)	6.7L
ENGINE NET HP	300
ENGINE TORQ	660
TIRE SIZE & LOAD RANGE	MFG. STANDARD
RIM SIZE (INCHES)	MFG. STANDARD

STANDARD EQUIP. NO	DESCRIPTION
1	AIR CONDITIONING INCLUDES OPT. 87
37.1	COLORS, SOLID (OEM STANDARD)
59.3	FUEL TANK(S), 25 GALLON CAPACITY
72	MIRRORS, MANUALLY EXTENDABLE TYPE
77	STEERING, POWER
91	RADIO, AM/FM
107.1	SPARE TIRE AND WHEEL WITH LOCKABLE CARRIER
128	AUTOMATIC TRANSMISSION
213.2	TRAILER TOWING PACKAGE
241	ANTILOCK BRAKING SYSTEM (OEM STANDARD)
247	CAB STEPS FOR ALL DOORS

OPTIONAL EQUIPMENT

OPT. NO.	DESCRIPTION
37.4	COLOR: YELLOW: FEDERAL STANDARD 595B, COLOR NO. 13507 (QTY: 1-4) (SAP MATERIAL NO. 10024603)
37.5	COLOR: YELLOW: FEDERAL STANDARD 595B, COLOR NO. 13507 (QTY: 5 OR MORE) (SAP MATERIAL NO. 10024604)
63	GRILL GUARD (SAP MATERIAL NO. 10013339)
128.1	TRANSMISSION, AUTOMATIC WITH PTO PROVISION (SAP MATERIAL NO. 10013334)

OPT. NO.	DESCRIPTION
132.1	TRANSMISSION COOLER (SAP MATERIAL NO. 10013342)
223	DIFFERENTIAL RATIO: NORMAL - OPTIONAL RATIO(S) (SAP MATERIAL NO. 10024606)
224.4	STROBE LIGHT, MOUNTED ON ROOF, LOW PROFILE (SAP MATERIAL NO. 10024607)
224.5	ROOF-MOUNTED SPOTLIGHT (SAP MATERIAL NO. 10024608)
224.6	ROOF-MOUNTED SPOTLIGHTS, DUAL (2) (SAP MATERIAL NO. 10024609)
224.7	LIGHTBAR AND SIREN PACKAGE WHELEN MODEL FREEDOM LED (SAP MATERIAL NO. 10024620)
224.8	LIGHTBAR, MINIFREEDOM, WHELEN MODEL FT8AAAAP (SAP MATERIAL NO. 10024593)
240	ELECTRONIC ENGINE SPEED CONTROL (SAP MATERIAL NO. 10013338)
249	ENGINE HOUR METER, ACTUATE WITH ENGINE RUNNING, DASH MOUNTED (SAP MATERIAL NO. 10013340)
251	ELECTRIC BRAKE CONTROLLER (SAP MATERIAL NO. 10024594)

OPTIONAL EQUIPMENT FOR SERIES 930DLEV60CA CAB AND CHASSIS (CONTINUED))

OPTION NO.	DESCRIPTION
A	**SERIES 2005 SERVICE BODY**, REGULAR OR STANDARD TYPE, 108 INCHES LONG TO FIT A 60 INCH CAB TO AXLE, DUAL REAR WHEEL CAB & CHASSIS, INCLUDING THE FOLLOWING STANDARD EQUIPMENT (SAP MATERIAL NO. 10012977)

STANDARD EQUIP. NO	DESCRIPTION
2.17	LOCKING WATER COOLER
2.18	TAILGATE, OEM STANDARD
2.26	CLEARANCE LIGHTS
2.27	MUD FLAPS TWO (2) VERTICAL COMPARTMENTS ON EACH SIDE ONE (1) HORIZONTAL COMPARTMENT OVER WHEEL WELL ON EACH SIDE

APPROVED BRANDS

RKI:	L60DW89 (Chevrolet/Dodge)/ L60DW94 (Ford)
READING:	108GADW (Chevrolet)/ 108DADW (Dodge)/ 108FADW (Ford)
KNAPHEIDE:	6108DJ (Chevrolet/Dodge)/ 6108D54J (Ford)
OMAHA:	108DV (Chevrolet/Dodge)/ 108D54V (Ford)
STAHL:	CST110VVD (205908) (Chevrolet) / CST110VVD (205916) (Ford/Dodge)

OPTIONAL EQUIPMENT FOR SERIES 2005 SERVICE BODY:

OPT. NO.	DESCRIPTION
2.1	OVERHEAD LADDER RACKS (SAP MATERIAL NO. 10024595
2.2	SIDE- MOUNTED LADDER RACKS (Note: Not available with Option 2.20) (SAP MATERIAL NO. 10024596)
2.3	LADDER RACK WITH CONDUIT CARRIER (SAP MATERIAL NO. 10024597)
2.5	VISE RACK WITH PIPE HANGER (SAP MATERIAL NO. 10012984)
2.6	TELESCOPING TOP WITH TAILGATE ENCLOSURE (SAP MATERIAL NO. 10012983)
2.7	REAR BUMPER, MANUFACTURER'S STANDARD 8" WITH TREADPLATE (SAP MATERIAL NO. 10024598
2.8	REAR BUMPER, MANUFACTURER'S STANDARD 8" WITH GRIP STRUT (SAP MATERIAL NO. 10024599)
2.9	REAR BUMPER, MANUFACTURER'S STANDARD 12" WITH TREADPLATE (SAP MATERIAL NO. 10012981)
2.10	REAR BUMPER, MANUFACTURER'S STANDARD 12" WITH "GRIP STRUT (SAP MATERIAL NO. 10024630)

OPTIONAL EQUIPMENT FOR SERIES 2005 SERVICE BODY (CONTINUED)

OPT. NO.	DESCRIPTION
2.11	CENTRAL LOCKING SYSTEM (SAP MATERIAL NO. 10012979)
2.12	TREADPLATE, 3/16” FOR FLOOR (SAP MATERIAL NO. 10024631)
2.13	ANTI-SLIP COVERING FOR FLOOR (SAP MATERIAL NO. 10012978)
2.14	16 GAUGE TREADPLATE OVERLAY INSIDE OF BODY (SAP MATERIAL NO. 10024632)
2.15	16 GAUGE TREADPLATE OVERLAY TOP OF BODY (SAP MATERIAL NO. 10024633)
2.16	ANTISLIP COVERING FOR OPTION 2.15 (SAP MATERIAL NO. 10024634)
2.19	SIX-WAY CONNECTOR MOUNTED (SAP MATERIAL NO. 10012982)
2.20	TOP OPENING COMPARTMENT (Note: Not available with Option 2.15) (SAP MATERIAL NO. 10024635)
2.21	CARGO AREA FLOOR MAT, RUBBER (SAP MATERIAL NO. 10024636)
2.22	HEADACHE RACK (SAP MATERIAL NO. 10012980)
2.23	CRANE WITH PLANETARY GEAR WINCH (SAP MATERIAL NO. 10024637)
2.25	THREE-DRAWER STORAGE MODULE (SAP MATERIAL NO. 10024638)

OPTIONAL EQUIPMENT FOR SERIES 930DLEV60CA CAB AND CHASSIS (CONTINUED)

OPTION NO.	DESCRIPTION
B	**SERIES 21001 STATIONARY PLATFORM/STAKE BODY**, 112 INCHES LENGTH, 60 INCH CA, 96 INCHES OVERALL TO RUB RAILS (SAP MATERIAL NO. 10024923)

OPTIONAL EQUIPMENT FOR SERIES 21001 STAKE BODY

OPT. NO.	DESCRIPTION
1	STAKE RACK SECTIONS (SAP MATERIAL NO. 10024639)
2	STEEL FLOORING (SAP MATERIAL NO. 10024640)
3	RHINO LININGS TUFF-STUFF ANTISKID COATING ON STEEL FLOOR (SAP MATERIAL NO. 10024641)
4	LIFT GATE (SAP MATERIAL NO. 10024642)
5	BUMPER: ICC BUMPER PER DRAWING “A” 2" BALL (SAP MATERIAL NO. 10024627)
6	BUMPER: ICC BUMPER PER DRAWING “A”, 25/16” BALL (SAP MATERIAL NO. 10024628)
7	BUMPER: ICC BUMPER PER DRAWING “B” (SAP MATERIAL NO. 10024629)
8	REPLACEMENT BALL (SAP MATERIAL NO. 10024650)
9	FOUR-WAY ELECTRICAL ROUND CONNECTOR (SAP MATERIAL NO. 10024660)
10	SIX-WAY ELECTRICAL ROUND CONNECTOR (SAP MATERIAL NO. 10024661)
11	SEVEN-WAY ELECTRICAL ROUND CONNECTOR (SAP MATERIAL NO. 10024662)
12.2	UNDER BED BOX, 24” LONG, 18” DEPTH, 18” HEIGHT (SAP MATERIAL NO. 10024663)
12.3	UNDER BED BOX, 30” LONG, 18” DEPTH, 18” HEIGHT (SAP MATERIAL NO. 10024664)
2.27	UNDER BED BOX, 36” LONG, 18” DEPTH, 18” HEIGHT (SAP MATERIAL NO. 10024665)
2.	ALL UNDER SIDES COATED (SAP MATERIAL NO. 10024666)

ITEM NO.	DESCRIPTION
53	**SERIES 930D-LEV-84CA CAB & CHASSIS**, REGULAR CAB, 1-1/4-TON, 84 INCH CA, DUAL REAR WHEELS, DIESEL, MUST MEET OR EXCEED THE FEDERAL LEV CERTIFICATION, INCLUDING THE FOLLOWING STANDARD EQUIPMENT (SAP MATERIAL NO. 10013333)

MANUFACTURER	**FORD**
MODEL	F450 SD

SPECIFICATION	**MINIMUM REQUIREMENTS**
WHEEL BASE (INCHES)	165
CAB TO AXLE (INCHES)	84
APPROX. PAYLOAD (POUNDS)	8,640
GVWR (POUNDS)	15,000
ENGINE DISPLACEMENT (LITERS)	6.7L
ENGINE NET HP	300
ENGINE TORQ	660
TIRE SIZE & LOAD RANGE	MFG. STANDARD
RIM SIZE (INCHES)	MFG. STANDARD

STANDARD

EQUIP. NO	DESCRIPTION
1	AIR CONDITIONING INCLUDES OPT 87
37.1	COLORS, SOLID (OEM STANDARD)
59.3	FUEL TANK(S), 25 GALLON CAPACITY
72	MIRRORS, MANUALLY EXTENDABLE TYPE
77	STEERING, POWER
91	RADIO, AM/FM
107.1	SPARE TIRE AND WHEEL WITH LOCKABLE CARRIER
128	AUTOMATIC TRANSMISSION
213.2	TRAILER TOWING PACKAGE
241	ANTILOCK BRAKING SYSTEM (OEM STANDARD)
247	CAB STEPS FOR ALL DOORS

OPTIONAL EQUIPMENT

OPT. NO.	DESCRIPTION
37.4	COLOR: YELLOW: FEDERAL STANDARD 595B, COLOR NO. 13507 (QTY: 1-4) (SAP MATERIAL NO. 10024667)
37.5	COLOR: YELLOW: FEDERAL STANDARD 595B, COLOR NO. 13507 (QTY: 5 OR MORE) (SAP MATERIAL NO. 10024668)
63	GRILL GUARD (SAP MATERIAL NO. 10024669)

OPT. NO.	DESCRIPTION
128.1	TRANSMISSION, AUTOMATIC WITH PTO PROVISION (SAP MATERIAL NO. 10024670)
129	AUXILIARY IDLE CONTROL KEY (SAP MATERIAL NO. 10024671)
132.1	TRANSMISSION COOLER (SAP MATERIAL NO. 10013343
223	DIFFERENTIAL RATIO: NORMAL – OPTIONAL RATIO(S) (SAP MATERIAL NO. 10024673)
224.4	STROBE LIGHT, MOUNTED ON ROOF, LOW PROFILE (SAP MATERIAL NO. 10013341)
224.5	ROOF-MOUNTED SPOTLIGHT (SAP MATERIAL NO. 10024674)
224.6	ROOF-MOUNTED SPOTLIGHTS, DUAL (2) (SAP MATERIAL NO. 10024675)
224.7	LIGHTBAR AND SIREN PACKAGE WHELEN MODEL FREEDOM LED (SAP MATERIAL NO. 10024676)
224.8	LIGHTBAR, MINIFREEDOM, WHELEN MODEL FT8AAAAP (SAP MATERIAL NO. 10024677)
240	ELECTRONIC ENGINE SPEED CONTROL (SAP MATERIAL NO. 10024678)
249	HOUR METER (SAP MATERIAL NO. 10024679)
251	ELECTRIC BRAKE CONTROLLER (SAP MATERIAL NO. 10024680)

OPTIONAL EQUIPMENT FOR SERIES 930DLEV84CA CAB AND CHASSIS (CONTINUED)

OPT. NO.	DESCRIPTION
14A	**SERIES 2006 SERVICE BODY**, REGULAR OR STANDARD TYPE, 132 INCHES LONG TO FIT AN 84 INCH CAB TO AXLE, DUAL REAR WHEEL, CAB & CHASSIS, INCLUDING THE FOLLOWING STANDARD EQUIPMENT (SAP MATERIAL NO. 10024681)

STANDARD EQUIP. NO	DESCRIPTION
2.17	LOCKING WATER COOLER
2.18	TAILGATE, OEM STANDARD
2.26	CLEARANCE LIGHTS
2.27	MUD FLAPS THREE (3) VERTICAL COMPARTMENTS ON EACH SIDE ONE (1) HORIZONTAL COMPARTMENT OVER WHEEL WELL ON EACH SIDE

APPROVED BRANDS

RKI:	L84DW89 (Chevrolet/Dodge) / L84DW94 (Ford)
READING:	132GADW (Chevrolet) / 132DADW (Dodge)/ 132FADW (Ford)
KNAPHEIDE:	6132DJ (Chevrolet/Dodge) / 6132D54J (Ford)
OMAHA:	132DV (Chevrolet/Dodge) / 132D54V (Ford)
STAHL:	CST134VVD (205925) (Chevrolet) / CST134VVD (206161) (Ford/Dodge)

OPTIONAL EQUIPMENT FOR SERIES 2006 SERVICE BODY:

OPT. NO.	DESCRIPTION
2.1	OVERHEAD LADDER RACKS (SAP MATERIAL NO. 10024682)
2.2	SIDE- MOUNTED LADDER RACKS (Note: Not available with Option 2.20) (SAP MATERIAL NO. 10024683)
2.3	LADDER RACK WITH CONDUIT CARRIER (SAP MATERIAL NO. 10024684)
2.5	VISE RACK WITH PIPE HANGER (SAP MATERIAL NO. 10024685)
2.6	TELESCOPING TOP WITH TAILGATE ENCLOSURE (SAP MATERIAL NO. 10024686)
2.7	REAR BUMPER, MANUFACTURER'S STANDARD 8" WITH TREADPLATE (SAP MATERIAL NO. 10024687)
2.8	REAR BUMPER, MANUFACTURER'S STANDARD 8" WITH "GRIP STRUT (SAP MATERIAL NO. 10024688)
2.9	REAR BUMPER, MANUFACTURER'S STANDARD 12" WITH TREADPLATE (SAP MATERIAL NO. 10024689)
2.10	REAR BUMPER, MANUFACTURER'S STANDARD 12" WITH "GRIP STRUT (SAP MATERIAL NO. 10024700)

OPTIONAL EQUIPMENT FOR SERIES 930DLEV84CA CAB AND CHASSIS (CONTINUED)

OPTIONAL EQUIPMENT FOR SERIES 2006 SERVICE BODY (CONTINUED):

OPT. NO.	DESCRIPTION
2.11	CENTRAL LOCKING SYSTEM (SAP MATERIAL NO. 10024701)
2.12	TREADPLATE, 3/16” FOR FLOOR (SAP MATERIAL NO. 10024702)
2.13	ANTISLIP COVERING FOR FLOOR (SAP MATERIAL NO. 10024703)
2.14	16 GAUGE TREADPLATE OVERLAY INSIDE OF BODY (SAP MATERIAL NO. 10024704)
2.15	16 GAUGE TREADPLATE OVERLAY TOP OF BODY (SAP MATERIAL NO. 10024705)
2.16	ANTI-SLIP COVERING FOR OPTION 2.15 (SAP MATERIAL NO. 10024706)
2.19	SIX-WAY CONNECTOR MOUNTED (SAP MATERIAL NO. 10024707)
2.20	TOP-OPENING COMPARTMENT (Note: Not available with Option 2.15) (SAP MATERIAL NO. 10024708)
2.21	CARGO AREA FLOOR MAT, RUBBER (SAP MATERIAL NO. 10024709)
2.22	HEADACHE RACK (SAP MATERIAL NO. 10024710)
2.23	CRANE WITH PLANETARY GEAR WINCH (SAP MATERIAL NO. 10024711)
2.25	THREE-DRAWER STORAGE MODULE (SAP MATERIAL NO. 10024712)

OPTION NO.	DESCRIPTION
B	**SERIES 21004 STATIONARY PLATFORM/STAKE BODY** 144 INCHES LENGTH, 84 INCH CA, 96 INCHES OVERALL TO RUB RAILS (SAP MATERIAL NO. 10024713)

OPTIONAL EQUIPMENT

OPT. NO.	DESCRIPTION
1	STAKE RACK SECTIONS (SAP MATERIAL NO. 10024714)
2	STEEL FLOORING (SAP MATERIAL NO. 10024715)
3	RHINO LININGS TUFF-STUFF ANTISKID COATING ON STEEL FLOOR (SAP MATERIAL NO. 10024716)
4	LIFT GATE (SAP MATERIAL NO. 10024717
5	BUMPER: ICC BUMPER PER DRAWING “A” 2" BALL (SAP MATERIAL NO. 10024718)
6	BUMPER: ICC BUMPER PER DRAWING “A”, 25/16” BALL (SAP MATERIAL NO. 10024719)
7	BUMPER: ICC BUMPER PER DRAWING “B” (SAP MATERIAL NO. 10024720
8	REPLACEMENT BALL (SAP MATERIAL NO. 10024721)
9	FOUR-WAY ELECTRICAL ROUND CONNECTOR (SAP MATERIAL NO. 10024722)
10	SIX-WAY ELECTRICAL ROUND CONNECTOR (SAP MATERIAL NO. 10024723)
11	SEVEN-WAY ELECTRICAL ROUND CONNECTOR (SAP MATERIAL NO. 10024724)
12.2	UNDER BED BOX, 24” LONG, 18” DEPTH, 18” HEIGHT (SAP MATERIAL NO. 10024725)
12.3	UNDER BED BOX, 30” LONG, 18” DEPTH, 18” HEIGHT (SAP MATERIAL NO. 10024726)
12.4	UNDER BED BOX, 36” LONG, 18” DEPTH, 18” HEIGHT (SAP MATERIAL NO. 10024727)
13	ALL UNDER SIDES COATED (SAP MATERIAL NO. 10024728)

ITEM NO.	DESCRIPTION
54	**SERIES 930D-LEV-108CA CAB & CHASSIS**, REGULAR CAB, 1-1/4-TON, 108 INCH CA, DUAL REAR WHEELS, DIESEL, MUST MEET OR EXCEED THE FEDERAL LEV CERTIFICATION, INCLUDING THE FOLLOWING STANDARD EQUIPMENT (SAP MATERIAL NO. 10025312)

MANUFACTURER	**FORD**
MODEL	F450 SD

SPECIFICATION	**MINIMUM REQUIREMENTS**
WHEEL BASE (INCHES)	189
CAB TO AXLE (INCHES)	108
APPROX. PAYLOAD (POUNDS)	8,570
GVWR (POUNDS)	15,000
ENGINE DIS PLACEMENT (LITRES)	6.7L
ENGINE NET HP	300
ENGINE TORQ	660
TIRE SIZE & LOAD RANGE	MFG. STANDARD
RIM SIZE (INCHES)	MFG. STANDARD

STANDARD

EQUIP. NO	DESCRIPTION
1	AIR CONDITIONING INCLUDES OPT. 87
37.1	COLORS, SOLID (OEM STANDARD)
59.3	FUEL TANK(S), 25 GALLON CAPACITY
72	MIRRORS, MANUALLY EXTENDABLE TYPE
77	STEERING, POWER
91	RADIO, AM/FM
107.1	SPARE TIRE AND WHEEL WITH LOCKABLE CARRIER
128	AUTOMATIC TRANSMISSION
213.2	TRAILER TOWING PACKAGE
241	ANTILOCK BRAKING SYSTEM (OEM STANDARD)
247	CAB STEPS FOR ALL DOORS

OPTIONAL EQUIPMENT

OPT. NO.	DESCRIPTION
37.4	COLOR: YELLOW: FEDERAL STANDARD 595B, COLOR NO. 13507 (QTY: 1-4) (SAP MATERIAL NO. 10025313)
37.5	COLOR: YELLOW: FEDERAL STANDARD 595B, COLOR NO. 13507 (QTY: 5 OR MORE) (SAP MATERIAL NO. 10025314)
63	GRILL GUARD (SAP MATERIAL NO. 10025315)
128.1	TRANSMISSION, AUTOMATIC WITH PTO PROVISION (SAP MATERIAL NO. 10025317)

OPTIONAL EQUIPMENT FOR SERIES 930DLEV108CA CAB AND CHASSIS (CONTINUED)

OPT. NO.	DESCRIPTION
132.1	TRANSMISSION COOLER (SAP MATERIAL NO. 10025318)
223	DIFFERENTIAL RATIO: NORMAL - OPTIONAL RATIO(S) (SAP MATERIAL NO. 10025320)
224.4	STROBE LIGHT, MOUNTED ON ROOF, LOW PROFILE (SAP MATERIAL NO. 10025321)
224.5	ROOF-MOUNTED SPOTLIGHT (SAP MATERIAL NO. 10025322)
224.6	ROOF-MOUNTED SPOTLIGHTS, DUAL (2) (SAP MATERIAL NO. 10025323)
224.7	LIGHTBAR AND SIREN PACKAGE, WHELEN MODEL FREEDOM LED (SAP MATERIAL NO. 10025327)
224.8	LIGHTBAR MINIFREEDOM WHELEN MODEL FT8AAAAP (SAP MATERIAL NO. 10025328)
240	ELECTRONIC ENGINE SPEED CONTROL (SAP MATERIAL NO. 10025329)
249	HOUR METER (SAP MATERIAL NO. 10025330)

ITEM NO.	DESCRIPTION
55	**SERIES 930D-LEV-CC60CA CAB & CHASSIS**, CREW CAB CONFIGURATION, 1-1/4-TON, 60 INCH CA, DUAL REAR WHEELS, DIESEL, MUST MEET OR EXCEED THE FEDERAL LEV CERTIFICATION, INCLUDING THE FOLLOWING STANDARD EQUIPMENT (SAP MATERIAL NO. 10013327)

MANUFACTURER	**FORD**	**DODGE**
MODEL	F450 SD CREW CAB	4500CC

SPECIFICATION	**MINIMUM REQUIREMENTS**
WHEEL BASE (INCHES)	173
CAB TO AXLE (INCHES)	60
APPROX. PAYLOAD (POUNDS)	7,000
GVWR (POUNDS)	15,000
ENGINE DISPLACEMENT (LITERS)	6.7L DIESEL
ENGINE NET HP	300
ENGINE TORQ	630
TIRE SIZE & LOAD RANGE	MFG. STANDARD DRW
RIM SIZE (INCHES)	MFG. STANDARD

STANDARD EQUIP. NO	DESCRIPTION
1	AIR CONDITIONING INCLUDES OPT. 87
37.1	COLORS, SOLID (OEM STANDARD)
72	MIRRORS, MANUALLY EXTENDABLE TYPE
77	STEERING, POWER
91	RADIO, AM/FM
107.1	SPARE TIRE AND WHEEL WITH LOCKABLE CARRIER
128	AUTOMATIC TRANSMISSION
213.2	TRAILER TOWING PACKAGE
241	ANTILOCK BRAKING SYSTEM (OEM STANDARD)
247	CAB STEPS FOR ALL DOORS

OPTIONAL EQUIPMENT

OPT. NO.	DESCRIPTION
37.4	COLOR: YELLOW: FEDERAL STANDARD 595B, COLOR NO. 13507 (QTY: 1-4) (SAP MATERIAL NO. 10025331)
37.5	COLOR: YELLOW: FEDERAL STANDARD 595B, COLOR NO. 13507 (QTY: 5 OR MORE) (SAP MATERIAL NO. 10025332)
63	GRILL GUARD (SAP MATERIAL NO. 10025333)
128.1	TRANSMISSION, AUTOMATIC WITH PTO PROVISION (SAP MATERIAL NO. 10025334)

OPT. NO.	DESCRIPTION
132.1	TRANSMISSION COOLER (SAP MATERIAL NO. 10013331)
223	DIFFERENTIAL RATIO: NORMAL - OPTIONAL RATIO(S) (SAP MATERIAL NO. 10025335)
224.4	STROBE LIGHT, MOUNTED ON ROOF, LOW PROFILE (SAP MATERIAL NO. 10013330)
224.5	ROOF-MOUNTED SPOTLIGHT (SAP MATERIAL NO. 10025336)
224.6	ROOF-MOUNTED SPOTLIGHTS, DUAL (2) (SAP MATERIAL NO. 10025337)
224.7	LIGHTBAR AND SIREN PACKAGE WHELEN MODEL FREEDOM LED (SAP MATERIAL NO. 10025338)
224.8	LIGHTBAR MINIFREEDOM WHELEN MODEL FT8AAAAP (SAP MATERIAL NO. 10025339)
240	ELECTRONIC ENGINE SPEED CONTROL (SAP MATERIAL NO. 10025340)
249	ENGINE HOUR METER, ACTUATE WITH ENGINE RUNNING, DASH MOUNTED (SAP MATERIAL NO. 10025341)
251	ELECTRIC BRAKE CONTROLLER (SAP MATERIAL NO. 10013337)

OPTIONAL EQUIPMENT FOR SERIES 930DLEVCC60CA CAB AND CHASSIS (CONTINUED)

OPTION NO.	DESCRIPTION
A	**SERIES 2005 SERVICE BODY**, REGULAR OR STANDARD TYPE, 108 INCHES LONG TO FIT A 60 INCH CAB TO AXLE, DUAL REAR WHEEL CAB & CHASSIS, INCLUDING THE FOLLOWING STANDARD EQUIPMENT (SAP MATERIAL NO. 10012985)

STANDARD EQUIP. NO	DESCRIPTION
2.17	LOCKING WATER COOLER
2.18	TAILGATE, OEM STANDARD
2.26	CLEARANCE LIGHTS
2.27	MUD FLAPS TWO (2) VERTICAL COMPARTMENTS ON EACH SIDE ONE (1) HORIZONTAL COMPARTMENT OVER WHEEL WELL ON EACH SIDE

APPROVED BRANDS

RKI:	L60DW89 (Chevrolet/Dodge)/ L60DW94 (Ford)
READING:	108GADW (Chevrolet)/ 108DADW (Dodge)/ 108FADW (Ford)
KNAPHEIDE:	6108DJ (Chevrolet/Dodge)/ 6108D54J (Ford)
OMAHA:	108DV (Chevrolet/Dodge)/ 108D54V (Ford)
STAHL:	CST110VVD (205908) (Chevrolet) / CST110VVD (205916) (Ford/Dodge)

OPTIONAL EQUIPMENT FOR SERIES 2005 SERVICE BODY:

OPT. NO.	DESCRIPTION
2.1	OVERHEAD LADDER RACKS (SAP MATERIAL NO. 10012989)
2.2	SIDE-MOUNTED LADDER RACKS (Note: Not available with Option 2.20) (SAP MATERIAL NO. 10025342)
2.3	LADDER RACK WITH CONDUIT CARRIER (SAP MATERIAL NO. 10025343)
2.5	VISE RACK WITH PIPE HANGER (SAP MATERIAL NO. 10025344)
2.6	TELESCOPING TOP WITH TAILGATE ENCLOSURE (SAP MATERIAL NO. 10025345)
2.7	REAR BUMPER, MANUFACTURER'S STANDARD 8" WITH TREADPLATE (SAP MATERIAL NO. 10025346)
2.8	REAR BUMPER, MANUFACTURER'S STANDARD 8" WITH "GRIP STRUT" (SAP MATERIAL NO. 10025347)
2.9	REAR BUMPER, MANUFACTURER'S STANDARD 12" WITH TREADPLATE (SAP MATERIAL NO. 10012990)
2.10	REAR BUMPER, MANUFACTURER'S STANDARD 12" WITH "GRIP STRUT" (SAP MATERIAL NO. 10025348)

OPTIONAL EQUIPMENT FOR SERIES 2005 SERVICE BODY (CONTINUED)

OPT. NO.	DESCRIPTION
2.11	CENTRAL LOCKING SYSTEM (SAP MATERIAL NO. 10012987)
2.12	TREADPLATE, 3/16” FOR FLOOR (SAP MATERIAL NO. 10025349)
2.13	ANTISLIP COVERING FOR FLOOR (SAP MATERIAL NO. 10012986)
2.14	16 GAUGE TREADPLATE OVERLAY INSIDE OF BODY (SAP MATERIAL NO. 10025350)
2.15	16 GAUGE TREADPLATE OVERLAY TOP OF BODY (SAP MATERIAL NO. 10025351)
2.16	ANTI-SLIP COVERING FOR OPTION 2.15 (SAP MATERIAL NO. 10025352)
2.19	SIX-WAY CONNECTOR MOUNTED (SAP MATERIAL NO. 10012991)
2.20	TOP- OPENING COMPARTMENT (Note: Not available with Option 2.15) (SAP MATERIAL NO. 10025353)
2.21	CARGO AREA FLOOR MAT, RUBBER (SAP MATERIAL NO. 10025354)
2.22	HEADACHE RACK (SAP MATERIAL NO. 10012988)
2.23	CRANE WITH PLANETARY GEAR WINCH (SAP MATERIAL NO. 10025355)
2.25	THREE-DRAWER STORAGE MODULE (SAP MATERIAL NO. 10025356)

OPTIONAL EQUIPMENT FOR SERIES 930DLEVCC60CA CAB AND CHASSIS (CONTINUED)

OPTION NO.	DESCRIPTION
B	**SERIES 21001 STATIONARY PLATFORM/STAKE BODY**, 112 INCHES LENGTH, 60 INCH CA, 96 INCHES OVERALL TO RUB RAILS (SAP MATERIAL NO. 10013044)

OPTIONAL EQUIPMENT FOR SERIES 21001 STAKE BODY

OPT. NO.	DESCRIPTION
1	STAKE RACK SECTIONS (SAP MATERIAL NO. 10013045)
2	STEEL FLOORING (SAP MATERIAL NO. 10013046)
3	RHINO LININGS TUFFS-TUFF ANTISKID COATING ON STEEL FLOOR (SAP MATERIAL NO. 10013047)
4	LIFT GATE (SAP MATERIAL NO. 10025357)
4.1	HYDRAULIC LIFT GATE TOMMY GATE RAILGATE MODEL 8920A (SAP MATERIAL NO. 10013048)
5	BUMPER: ICC BUMPER PER DRAWING “A” 2" BALL (SAP MATERIAL NO. 10025358)
6	BUMPER: ICC BUMPER PER DRAWING “A”, 25/16” BALL (SAP MATERIAL NO. 10025359)
7	BUMPER: ICC BUMPER PER DRAWING “B” (SAP MATERIAL NO. 10013049)
8	REPLACEMENT BALL (SAP MATERIAL NO. 10025360)
9	FOUR-WAY ELECTRICAL ROUND CONNECTOR (SAP MATERIAL NO. 10025361)
10	SIX-WAY ELECTRICAL ROUND CONNECTOR (SAP MATERIAL NO. 10013050)
11	SEVEN-WAY ELECTRICAL ROUND CONNECTOR (SAP MATERIAL NO. 10025362)
12.2	UNDER BED BOX, 24” LONG, 18” DEPTH, 18” HEIGHT (SAP MATERIAL NO. 10025363)
12.3	UNDER BED BOX, 30” LONG, 18” DEPTH, 18” HEIGHT (SAP MATERIAL NO. 10013051)
12.4	UNDER BED BOX, 36” LONG, 18” DEPTH, 18” HEIGHT (SAP MATERIAL NO. 10025364)
13	ALL UNDER SIDES COATED (SAP MATERIAL NO. 10013052}

OPTIONAL EQUIPMENT FOR SERIES 930DLEVCC60CA CAB AND CHASSIS (CONTINUED)

OPTION NO.	DESCRIPTION
C	**BODY, DUMP TRUCK 2/3 CU.YD.** **SN4000** 8' BED 60" CA (SAP MATERIAL NO. 10037740)

OPTIONAL EQUIPMENT FOR DUMP BODY

OPT. NO.	DESCRIPTION
1	HITCH, PINTLE MODEL PH-T-60-AOL-8 OR CITY-APPROVED EQUAL REINFORCED TO FRAME CAPABLE OF PULLING MINIMUM OF 30,000 LBS. (SAP MATERIAL NO. 10037741)
7	STROBE LIGHT TARGET TECH NO. 851, AMBER, HEADACHE RACK MOUNTED, SWITCH TO BE CAB-MOUNTED WITH INDICATOR LIGHT, WIRING NOT EXPOSED, TO HAVE HOT CONNECTOR EXPOSED, TO HAVE A HOT CONNECTOR FUSE. ALL OUTSIDE WIRE MOUNTING SHALL BE PROTECTED BY TUBING. UNIT SHALL BE FURNISHED WITH BRUSH GUARD (SAP MATERIAL NO. 10037742)
11	TARP DONOVAN 5000GL HD PVC COATED MESH COVER WITH WIND DEFLECTOR (SAP MATERIAL NO. 10037743)

ITEM NO.	DESCRIPTION
56	**SERIES 932C-LEV-60CA CAB & CHASSIS**, REGULAR CAB, 1-1/2-TON, 60 INCH CA, DUAL REAR WHEELS, GASOLINE, MUST MEET OR EXCEED THE FEDERAL LEV CERTIFICATION, INCLUDING THE FOLLOWING STANDARD EQUIPMENT (SAP MATERIAL NO. 10025466)

MANUFACTURER	FORD
MODEL	F550SD

SPECIFICATION	**MINIMUM REQUIREMENTS**
WHEEL BASE (INCHES)	141
CAB TO AXLE (INCHES)	60
APPROX. PAYLOAD (POUNDS)	11,090
GVWR (POUNDS)	17,500
ENGINE DISPLACEMENT (LITERS)	6.8L V10
ENGINE NET HP	362
ENGINE TORQ	457
TIRE SIZE & LOAD RANGE	MFG. STANDARD
RIM SIZE (INCHES)	MFG. STANDARD

STANDARD EQUIP. NO	DESCRIPTION
1	AIR CONDITIONING, INCLUDES OPT. 87
37.1	COLORS, SOLID (OEM STANDARD)
59.3	FUEL TANK(S), 25 GALLON CAPACITY
72	MIRRORS, MANUALLY EXTENDABLE TYPE
77	STEERING, POWER
91	RADIO, AM/FM
128	AUTOMATIC TRANSMISSION
241	ANTILOCK BRAKING SYSTEM (OEM STANDARD)
247	CAB STEPS FOR ALL DOORS

OPTIONAL EQUIPMENT FOR CAB AND CHASSIS

OPT. NO.	DESCRIPTION
37.4	COLOR: WHEATLAND YELLOW (QTY: 14) (SAP MATERIAL NO. 10025467)
37.5	COLOR: WHEATLAND YELLOW (QTY: 5 OR MORE) (SAP MATERIAL NO. 10025468)
52	FOUR-WHEEL DRIVE (SAP MATERIAL NO. 10025469)
63	GRILL GUARD (SAP MATERIAL NO. 10025470)
127.1	MANUAL TRANSMISSION WITH PTO PROVISION (SAP MATERIAL NO. 10025471)
128.1	AUTOMATIC TRANSMISSION WITH PTO PROVISION (SAP MATERIAL NO. 10031346)

OPTIONAL EQUIPMENT

132.1 TRANSMISSION COOLER
(SAP MATERIAL NO. 10025472)

223 DIFFERENTIAL RATIO: NORMAL - OPTIONAL RATIO(S)
(SAP MATERIAL NO. 10025483)

224.4 STROBE LIGHT, MOUNTED ON ROOF, LOW PROFILE
(SAP MATERIAL NO. 10025442)

224.8 LIGHTBAR, MINIFREEDOM, WHELEN MODEL FT8AAAAP
(SAP MATERIAL NO. 10025444)

233.1 CREW CAB CONFIGURATION WITH 60 INCH CA
(SAP MATERIAL NO. 10025445)

240 ELECTRONIC ENGINE SPEED CONTROL
(SAP MATERIAL NO. 10025446)

249 ENGINE HOUR METER, ACTUATE WITH
ENGINE RUNNING, DASH MOUNTED
(SAP MATERIAL NO. 10025447)

252 OPTIONAL CAB-TO-AXLE DIMENSION: 84 INCH CA
(SAP MATERIAL NO. 10025484)

252.2 OPTIONAL CAB-TO-AXLE DIMENSION: 120 INCH CA
(SAP MATERIAL NO. 10025485)

OPTIONAL EQUIPMENT FOR SERIES 932C-LEV60CA CAB AND CHASSIS (CONTINUED)

OPTION NO.	DESCRIPTION
C	**SERIES 21006 STATIONARY PLATFORM/STAKE BODY** 192 INCHES LENGTH, 120 INCH CA, 96 INCHES OVERALL TO RUB RAILS (SAP MATERIAL NO. 10031017)

OPTIONAL EQUIPMENT

OPT. NO.	DESCRIPTION
1	STAKE RACK SECTIONS (SAP MATERIAL NO. 10031018)
2	STEEL FLOORING (SAP MATERIAL NO. 10031019)
4.2	LIFT GATE, FOLDAWAY (SAP MATERIAL NO. 10031040)

ITEM NO.	DESCRIPTION

57 **SERIES 932D, CAB & CHASSIS,** REGULAR CAB, 1-1-2-TON, 60 INCH CA, DUAL REAR WHEELS, DIESEL, MUST MEET OR EXCEED THE FEDERAL LEV CERTIFICATION, INCLUDING THE FOLLOWING STANDARD EQUIPMENT
(SAP MATERIAL NO. 10013357)

MANUFACTURER	**FORD**
MODEL	F550 SD

SPECIFICATION	**MINIMUM REQUIREMENTS**
WHEEL BASE (INCHES)	141
CAB TO AXLE (INCHES)	60
APPROX. PAYLOAD (POUNDS)	10,720
GVWR (POUNDS)	17,500
ENGINE DISPLACEMENT (LITERS)	6.7L DIESEL,
ENGINE NET HP	300
ENGINE TORQ	660
TIRE SIZE & LOAD RANGE	MFG. STANDARD
RIM SIZE (INCHES)	MFG. STANDARD

STANDARD EQUIP. NO	DESCRIPTION
1	AIR CONDITIONING, INCLUDES OPT. 87
37.1	COLORS, SOLID (OEM STANDARD)
59.3	FUEL TANK(S), 25 GALLON CAPACITY
72	MIRRORS, MANUALLY EXTENDABLE TYPE
77	STEERING, POWER
91	RADIO, AM/FM
128	AUTOMATIC TRANSMISSION
241.1	BRAKES, ABS FRONT AND REAR
247	CAB STEPS FOR ALL DOORS

OPT. NO.	DESCRIPTION
37.4	COLOR: WHEATLAND YELLOW (QTY: 14) (SAP MATERIAL NO. 10025486)
37.5	COLOR: WHEATLAND YELLOW (QTY: 5 OR MORE) (SAP MATERIAL NO. 10025487)
52	FOUR-WHEEL DRIVE (SAP MATERIAL NO. 10025488)
63	GRILL GUARD (SAP MATERIAL NO. 10025489)
127.1	MANUAL TRANSMISSION WITH PTO PROVISION (SAP MATERIAL NO. 10025490)
128.1	AUTOMATIC TRANSMISSION WITH PTO PROVISION (SAP MATERIAL NO. 10030961)

SERIES 932D60CA CAB AND CHASSIS (CONTINUED).

OPTIONAL EQUIPMENT

OPT. NO.	DESCRIPTION
129	AUXILIARY IDLE CONTROL KIT (SAP MATERIAL NO. 10025492)
132.1	TRANSMISSION COOLER (SAP MATERIAL NO. 10025493)
224.4	STROBE LIGHT, MOUNTED ON ROOF, LOW PROFILE (SAP MATERIAL NO. 10025505)
224.8	LIGHTBAR, MINIFREEDOM, WHELEN MODEL FT8AAAAP (SAP MATERIAL NO. 10025496)
233.1	CREW CAB CONFIGURATION WITH 60 INCH CA (SAP MATERIAL NO. 10025499)
240	ELECTRONIC ENGINE SPEED CONTROL (SAP MATERIAL NO. 10025500)
249	ENGINE HOUR METER, ACTUATE WITH ENGINE RUNNING, DASH MOUNTED (SAP MATERIAL NO. 10025501)
252	OPTIONAL CAB-TO-AXLE DIMENSION: 84 INCH CA (SAP MATERIAL NO. 10025502)
252.2	OPTIONAL CAB-TO-AXLE DIMENSION: 120 INCH CA (SAP MATERIAL NO. 10025503)

OPTIONAL EQUIPMENT SPECIFICATIONS
FOR
AUTOS AND LIGHT-DUTY TRUCKS

ALL EQUIPMENT LISTED BELOW SHALL BE FACTORY-INSTALLED. IF AN ITEM IS NOT AVAILABLE AS FACTORY-INSTALLED, AFTER-MARKET EQUIPMENT MAY BE SUBSTITUTED FOR THAT ITEM.

OPTION NO.	OPTION DESCRIPTION
1.	**AIR CONDITIONING UNIT** - The unit shall be chassis factory installed and shall be an integral type (not mounted under the dash). The manufacturer's basic air conditioning package shall include a heavy-duty radiator (see Option No. 87). Air conditioning is standard (and therefore not an option) on all series.
2.	**AIR CONDITIONING/ HEATING UNIT, FRONT AND REAR** - The front unit shall be factory installed (no exceptions). The rear unit shall be furnished as a factory installed combination unit, if available, or as an after-market auxiliary, providing that the unit does not interfere with the headroom requirement, and meets or exceeds the recommendations of, and is sanctioned by, the chassis manufacturer. The after-market auxiliary unit shall be fully warranted for a minimum of 12 months.
2.1	**AIR CONDITIONER UNIT,** rear - factory installed.
15.	**ALTERNATOR**: Manufacturer's heavy-duty increased capacity alternator SAE rated at 120 amperes minimum.
16.	**ALTERNATOR**: Manufacturer's heavy-duty alternator SAE rated at 130 amperes minimum.
17	**ALTERNATOR** Manufacturer's heavy-duty dual alternators SAR rated at 357 amperes minimum.
24.	**BRAKES, POWER FRONT DISC –** Manufacturer's standard, power front disc brakes
29.1	**BUMPER, REAR,** OEM standard step type
37.1	**COLORS, SOLID** - selected from manufacturer's standard colors.
37.4	**COLOR: Yellow - Must be Federal Standard 595B, Color No. 13507** (Qty: 1-4) (No Substitutions Allowed)
37.5	**COLOR: Yellow - Must be Federal Standard 595B, Color No. 13507** (Qty: 5 or more) (No Substitutions Allowed)
45.	**DIFFERENTIAL, LIMITED-SLIP TRACTION TYPE** - The maximum traction type differential shall be Positraction, No Spin, or equal
46.	**DOOR LOCKS**, power (all passenger doors). Manufacturer's standard
49.	**LARGER DISPLACEMENT GASOLINE ENGINE -** Next largest engine available
50.	**UPGRADE TRIM LEVEL TO LX TRIM FOR SERIES 374C FULL SIZE SEDAN:** Includes 16" Nine Spoke Aluminum Wheels, Electronic Automatic Temperature Control (Etc), Overhead Console With Dome Lamp And Compass, And Rear Seat Reading Lamps
52.	**FOUR-WHEEL DRIVE –** Four-wheel drive vehicles shall include automatic locking hubs and skid plates.
53	**ELECTRIC SHIFT –** On the fly for 4-wheel drive

OPTIONAL EQUIPMENT SPECIFICATIONS (Continued):

OPTION NO.	OPTION DESCRIPTION

59.1 **TANK(S) FUEL,** to have a minimum total of **thirty-gallon capacity**.

59.2 **TANK(S) FUEL**, to have a minimum total of **thirty-six gallon capacity**.

59.3 **TANK(S) FUEL**, to have a minimum total of **twenty-five gallon capacity**.

63. **GRILLE GUARD, HEAVY-DUTY** - A heavy duty grille guard designed to protect the headlamps and grille of a vehicle shall be mounted on the front of vehicle for which it is required. This guard shall be bolted to the bumper with a minimum of two bolts, lock nuts, and washers on each side. Thread forming bolts or screws are not acceptable. It shall be treated in a chemical bath or dip, or similarly treated for rust prevention prior to application of the final paint coating. The grille guard furnished must be approved by the City Purchasing Agent, in writing, if other than the following:

- Brushguard Model BG – manufactured by Marks Machine, 1101 N. Blue Creek Road, El Campo, TX 77437
- Jumbo Flush Guard Model 500 - manufactured by The Perry Company, P.O. Box 7187, Waco, TX 76714
- Grille Guard Model GG- manufactured by Brown Welding & Mfg., New Braunfels TX 78130
- Grille Guard Model BG-500 - manufactured by Spillar Custom Hitches, Austin, TX 78759

71. **MIRROR, REARVIEW, EXTERIOR, LOW MOUNT TYPE, LEFT AND RIGHT SIDES** - manufacturer's low mount (below eye level, wide view type mirror), two or three point mounting. Mirror shall meet or exceed the requirements of FMVSS No. 111 and shall have a face size approximately 6" by 9"with an adjustable low mount bracket. **Extension arms are required on chassis-cab units.**

72. **MIRRORS, REARVIEW, EXTERIOR, TRAILER-TOW-TYPE, EXTENDABLE MANUAL**

73. **MIRRORS, REARVIEW, EXTERIOR, MATCHING LEFT AND RIGHT SIDES** - Each mirror shall have a minimum viewing area of 12 square inches and shall be factory or dealer installed. **Left side mirror shall be remote control type.**
NOTE: WHEN A SPOTLIGHT IS ALSO SPECIFIED, THE LEFT-SIDE MIRROR SHALL BE MOUNTED TO THE REAR OF THE SPOTLIGHT AND THE OPERATION OF THE TWO SHALL NOT CONFLICT.

73.2 **MIRRORS, REARVIEW, EXTERIOR POWER, MATCHING LEFT AND RIGHT SIDES** - Each mirror shall have a minimum viewing area of 12 square inches and shall be factory or dealer installed. **POWER remote control on both left and right sides.**
NOTE: WHEN A SPOTLIGHT IS ALSO SPECIFIED, THE LEFT-SIDE MIRROR SHALL BE MOUNTED TO THE REAR OF THE SPOTLIGHT AND THE OPERATION OF THE TWO SHALL NOT CONFLICT.

77. **STEERING, POWER** - manufacturer's standard.

87. **RADIATOR, HEAVY-DUTY TYPE** - Radiator shall be furnished with the same capacity offered by the manufacturer for the Series when factory air conditioning is supplied. Heavy duty radiators **are required** with all air conditioning options.

91. **RADIO, AM-FM -** Radio shall be a chassis factory installed standard brand AM-FM transistor radio. Antenna, which may be an integral part of the windshield, shall be furnished and mounted.

95. **NAVIGATION SYSTEM,** with display and integrated backup camera (Manufacturer's OEM Equipment)

97. **PASSENGER SEAT** (for Cargo Vans)

99. **REAR SEAT** (for Utility and Carryall Vehicles) - additional seat to increase total seating capacity to 8 or more.

103. **SHOCK ABSORBERS, HEAVY-DUTY** - Shock absorber shall be the manufacturer's heavy duty type in lieu of the regular-duty shock absorbers.

OPTIONAL EQUIPMENT SPECIFICATIONS (Continued):

OPTION
NO. OPTION DESCRIPTION

107. SPARE WHEEL and TIRE, FULL SIZE CONVENTIONAL TYPE, MOUNTED, IN LIEU OF SPACE SAVING TIRE. JACK, HANDLE and LUG WRENCH TO BE INCLUDED. The conventional spare tire and wheel shall be alike in the type and size of tires as to those mounted on the vehicle front wheels.

107.1 SPARE WHEEL AND TIRE, Same as Option 107, except with lockable wheel carrier, including locking device.

111A SPOTLIGHT, CHROME must be Unity 325 halogen or City-approved equal, and shall have a 6-inch diameter white lens for current model vehicle. It shall be mounted on the left side of the windshield post or quarter panel, either by the chassis manufacturer or by means of an approved bracket. The local installation, if required, shall be accomplished in a workmanship-like manner. The spotlight and the exterior rearview mirror shall not conflict.

111.1 SPOTLIGHTS – same as Option 111A, except dual, pillar or door mounted on left & right sides**.**

115. STEERING WHEEL, TILT, manufacturer's standard.

116. CRUISE CONTROL (includes Option 115, tilt steering wheel)

TRUCK TOOLBOXES – STEEL FRONT CROSS BOX AND SIDE-BOX:
The toolboxes furnished must be approved by the City Purchasing Agent, in writing, if other than the following RKI or Weather-Guard brands and Model Numbers listed below.

121.1 CROSS-BOX WITH DOUBLE LID – RKI Model ST63 or Weather Guard 125-3-01 for full size pickups

122.1 CROSS-BOX WITH SINGLE LID– RKI Model C63 or Weather-Guard 126-3-01 for full size pickups

122.2 CROSS-BOX WITH SINGLE LID – RKI Model C56 or Weather-Guard 136-3-01 for small pickups

122.3 SIDE BOX – RKI Model 61S or Weather-Guard R175-3-01 for full size pickups

122.4 SIDE BOX – RKI Model 43S or Weather-Guard R185-3-01 for small pickups

122.5 SIDE BOX (Wide) – RKI Model 67SW or City-approved equal for full size pickups.

122.5A TOOL BOX TRAY – Tray for Tool Box Option No. 122.5, RKI Model 67SW or City-approved equal

TRUCK TOOL BOXES - ALUMINUM FRONT CROSS BOX AND SIDE BOX:
The toolboxes furnished must be approved by the City Purchasing Agent, in writing, if other than the following RKI or Weather-Guard brands and Model Numbers listed below.

123.1 CROSS-BOX WITH SINGLE LID – RKI Model C63A or Weather-Guard Model 127-0-02

123.2 SIDE BOX – RKI Model 67SA or Weather-Guard Model R174-0-01

123.3 SIDE BOX – RKI Model 50SA or Weather-Guard Model R184-0-01

123.5 CROSS-BOX, LOW PROFILE WITH SINGLE LID – RKI Model C63LPA or Weather Guard 187-0-01

127 TRANSMISSION, MANUAL, manufacturers standard for the engines furnished for all series

127.1 TRANSMISSION, MANUAL with PTO provisions, manufacturer's standard for the engines furnished for all series

OPTIONAL EQUIPMENT SPECIFICATIONS (Continued):

OPTION NO.	OPTION DESCRIPTION
128	**TRANSMISSION, AUTOMATIC,** manufacturer's standard for the engines furnished for all series
128.1	**TRANSMISSION, AUTOMATIC WITH PTO PROVISION,** manufacturer's standard for the engines furnished for all series
128.2	**TRANSMISSION, CVT** – Continuous Variable Transmission, manufacturer's standard for the engines furnished for all series
128.3	**TRANSMISSION, AUTOMATIC HYBIRD –** Manufacturer's standard for the engines furnished for hybrid series
129.	**AUXILIARY IDLE CONTROL KIT**
132.1	**AUTOMATIC TRANSMISSION OIL COOLER**, heavy duty, auxiliary, externally mounted only, OEM if available.
136.1	**MANUFACTURER'S EXTENDED WARRANTY (NO EXCEPTIONS) FOR VEHICLES AND CABS & CHASSIS** - shall extend the manufacturer's standard warranty to as follows **with a $200.00 or less deductible.** Ford – Premium Extended Service Plan - Six years or 75,000 miles, whichever comes first General Motors – Major Guard Extended Service Plan - Six years or 72,000 miles, whichever comes first Daimler Chrysler – Maximum Care Upgrade - Six years or 70,000 miles, whichever comes first
136.2	**WARRANTY, MANUFACTURER'S EXTENDED (NO EXCEPTIONS) FOR VEHICLES AND CABS & CHASSIS** - shall extend the manufacturer's standard bumper-to-bumper warranty, as specified herein, **to a total period of six years and 100,000-miles**, whichever comes first, **with $200.00 deductible**.
136.3	**WARRANTY, MANUFACTURER'S EXTENDED (NO EXCEPTIONS) FOR VEHICLES AND CABS & CHASSIS** – shall extend the manufacturer's standard warranty, as specified herein, **to a total period of four years and 100,000 miles**, whichever comes first, **with $200.00 deductible.**
140.1	**WINDOW TINT,** darkest maximum tint allowed by State Law, whether factory or dealer installed.
140.2	**WINDOW TINT, AUTOMOTIVE GRADE, FOR POLICE DEPARTMENT.** Tint light transition shall be 35% for front door glass, and 25-27% for rear door and rear window glass, whether installed by factory or dealer.
144	**WINDSHIELD WIPERS, INTERMITTENT-TYPE,** with integral windshield washer - must be manufacturers standard, factory installed.
145	**WINDSHIELD WIPER, REAR WINDOW,** limited availability with Integral Washer (N/A with panel doors)
149	**REAR DOOR GLASS -** (For Cargo Vans - glass must be factory installed; no dealer-installed glass is acceptable)
151	**GLASS IN ALL DOORS** - must be factory installed; no dealer-installed glass is acceptable.
153	**GLASS IN EACH DOOR AND SIDE PANEL (NOTE: SAME AS WINDOW VAN)**
200	**WHEEL COVERS,** OEM standard set of four.
200.1	**HUBCAPS,** OEM Standard, set of four.
201	**UPGRADE TIRES AND WHEELS**
201.1	**UPGRADE TIRES AND WHEELS FOR POLICE DEPARTMENT,** with 16 inch, 9-spoke aluminum wheels and tires
204	**SINGLE KEY LOCKING**, each vehicle keyed separately. Includes a minimum of two remotes with keys and two additional door/ignition conventional keys

OPTIONAL EQUIPMENT SPECIFICATIONS (Continued):

OPTION NO.	OPTION DESCRIPTION
205	**CLOTH UPHOLSTERY,** front and rear w/split front seat (50/50, 55/45, 45/45).
206	**REMOVABLE REAR PASSENGER SEATS,** for passenger vans.
207	**POWER WINDOWS,** manufacturer's standard
208	**REAR WINDOW DEFROSTER INCLUDING REAR WIPERS WHEN AVAILABLE.**
209	**POWER DOOR LOCKS / POWER WINDOWS COMBINATION feature,** manufacturers standard
210	**SPECIAL SEATING REQUIREMENT**: Hi-back front bucket seats, less large center console and one (1) only center bench seat for three passengers. All seating shall be of identical material.
210.1	**SPECIAL SEATING**: Front seat, 40/40 with console.
210.5	**FORD XLT / CHEVROLET LS TRIM LEVEL UPGRADE: BUCKET SEATS, CENTER CONSOLE WITH SHIFTER IN CONSOLE.**
210.8	**VEHICLE UPGRADE FOR FORD EXPEDITION EL 2WD LIMITED MODEL, FORD ORDER CODE K1K, WHICH INCLUDES ALL LIMITED MODEL VEHICLE STANDARD EQUIPMENT AND FEATURES. ALSO INCLUDES THE FOLLOWING ADDITIONAL EQUIPMENT: 301A EQUIPMENT GROUP, 58F NAVIGATION SYSTEM WITH H/D RADIO, 64P 20" POLISHED ALUMINUM WHEELS, 65R POWER CODE REMOTE START SYSTEM, ECCO BACKUP ALARM, AND MOUNTED FRONT BUMPER PARKING ASSIST SYSTEM. BLACK EXTERIOR COLOR AND CHARCOAL BLACK INTERIOR COLOR.**
210.9	**VEHICLE UPGRADE FOR CHEVROLET SUBURBAN 2WD 1500 LTZ, CHEVROLET ORDER CODE CC10906, WHICH INCLUDES ALL 1500 LTZ MODEL VEHICLE STANDARD EQUIPMENT AND FEATURES. ALSO INCLUDES THE FOLLOWING ADDITIONAL EQUIPMENT: PCJ EQUIPMENT GROUP, UFT SIDE BLIND ZONE ALERT AND VLI REAR CARGO MAT. BLACK GRANITE METALLIC EXTERIOR COLOR AND EBONY INTERIOR COLOR.**
211	**CLOTH SEAT(S), OEM STANDARD**
212	**HEAVY-DUTY SUSPENSION W/FRONT STABILIZER BARS**
212.1	**HEAVY-DUTY SUSPENSION, 11,200LBS GVWR.**
213	**RECEIVER HITCH, Class III, with ball mount, pin & clip and 2" chrome ball. Reinforced to the frame. To includes TRAILER CONNECTION.**
213.1	**FACTORY INSTALLED MANUFACTURER'S STANDARD TRAILER TOWING PACKAGE** with receiver hitch. Ball mount, pin & clip, 2" chrome ball mounted to receiver hitch and **TRAILER CONNECTION** shall also be provided (either factory installed if available or dealer installed).
213.2	**TRAILER TOWING PACKAGE INCLUDING** 7-Wire Harness, Trailer Brake Wiring Kit, Trailer Tow Guide (either factory installed if available or dealer installed).
213.3	**FACTORY INSTALLED MANUFACTURER'S STANDARD TRAILER TOWING PACKAGE FOR 4-WD** with receiver hitch. Ball mount, pin & clip, 2" chrome ball mounted to receiver hitch and **TRAILER CONNECTION,** shall also be provided (either factory installed if available or dealer installed).
213.4	**GOOSENECK TOWING PACKAGE** includes one frame under-bed cross member, integrated 7-pin connector on driver side pickup bedwall, 2-5/16" ball assembly, trailer brake control and limited slip axle. Includes reducer for receiver hitch and 7-way to 6-way adaptor. Either factory installed if available or dealer installed.

OPTIONAL EQUIPMENT SPECIFICATIONS (Continued):

OPTION NO. **OPTION DESCRIPTION**

214 **LIFT GATE, 1,300 lb. capacity,** single unit electric/hydraulic with 4 inch loading ramp as part of platform.

214.1 **LIFT GATE, FOLD-DOWN TYPE:**

- **Ford – 1,000-lb. capacity, single unit electric/hydraulic with 4 inch loading ramp as part of platform**
- **Chevrolet Vans – 1000-lb. capacity, fold down loading ramp. Tommy Gate Mdl No. CVL-AD 7330 EF52 or City-approved equal**

214.2 **LIGHT KIT FOR OPTION 214 OR OPTION 214.1**

214.5 **LIFTGATE, 1,000 lb. capacity,** single unit electric/hydraulic with 4 inch loading ramp as part of platform.

215 **CARPET ONLY** front and rear.

216 **PICKUP BED AND TAILGATE LINER, POLYURETHANE,** over the rail design where applicable, heavy-duty, single piece and specifically designed for model pickup proposed.

217 **SPRAY IN BED AND TAILGATE LINER**, Over the rail spray on Chevrolet and Dodge Models, Must be Rhino-Linings Tuff-Stuff or Line-X. 1/4" bed and 1/8" walls. Black in color. Lifetime warranty. (No Substitutions Allowed)

223 **OPTIONAL DIFFERENTIAL RATIO,** Contractor/Supplier shall supply an optional differential ratio compatible with the engine/transmission combination in lieu of the vehicle's standard differential.

224.4 **STROBE LIGHT, LOW PROFILE LED,** mounted on roof. Lighted switch mounted on dash in a convenient location. Strobe Lights must meet the J845 standards and be listed with AMECA. Double-flash, minimum five joules, Maximum height 6" amber in color, 1-year warranty on bulb and 2-1/2-year warranty on power supply, Whelen Model No. L21, Sereis Super LED Encapuslated Class 1 LED Beacon (Amber), Target Tech Model 252650-02, Ecco Model 7960A, or City approved equal.

224.5 **SPOTLIGHT, ROOF,** Permanent Mount with Dash-Mounted Remote, Manufacturer's 3-year warranty. GoLight Model 2020 (White), GoLight Model 2021 (Black) or City-approved equal.

224.6 **SPOTLIGHTS, ROOF, DUAL (2),** Permanent Mount with Dash-Mounted Remote, Manufacturer's 3-year warranty. GoLight Model 2020 (White), GoLight Model 2021 (Black) or City-approved equal.

224.7 **LIGHTBAR AND SIREN PACKAGE, Whelen Model No. A175384935**
All amber lenses except clear lenses on alley lights and take down lights. Unit shall be mounted, wired and ready for service. (NO SUBSTITUTIONS ALLOWED)
Consists of:

IB2FFF	54" Liberty II Lightbar, with Four Corner Split LEDS Amber/White (White LEDS have capability to burn steady for added Flood Lighting)
IBDLF	Quantity Ten (10) – Long Linear LED Reflectors Amber/White (Front and Rear of Bar with White LEDS Having Capability to Steady Burn for Added Flood and Scene Lighting)
IBDSF	Quantity Four (4) Short Linear LED Reflectors Amber/White (Front and Rear of Bar) FLH2CC
IA3	Pair of LED Alley Lights
ITL12	Pair of 12 DIODE Hi Intensity LED Takedown Lights. (Lightbar Drawings Included)
SA314A	100 WATT Speaker Aluminum with Aluminum Finish
SABKT*	Lightbar Mounting Bracket Specify Model of Vehicle
295SDA1	200 WATT Dual Tome Remote Siren/Switch Combo

224.8 **LIGHT BAR, MINIFREEDOM LED, shall be Whelen Model FT8AAAAP** (No Substitutions Allowed)
With all amber lenses permanently mounted, wired, fused and high-low power switch to be fully operational. Switch to be high/low density type and placed in vehicle in an easily reachable location proximate to the driver. Equipment shall be roof-mounted with the following exception: If purchased for a truck with a headache rack, Option No. 264, then mount the light bar to the headache rack unless otherwise specified on the City Purchase Order.

OPTIONAL EQUIPMENT SPECIFICATIONS (Continued):

OPTION NO. OPTION DESCRIPTION

224.9 LIGHT PACKAGE FOR FIRE DEPT., FS-CHVHFD, includes the following parts and installation of same:

MANUFACTURER	PART #	DESCRIPTION	QUANTITY
Whelen	MB15CTJJ	Mirror Beams, Split Red/Blue For 2015 Chevy Tahoe or Surburban	1
Whelen	VTX609R	Vertex Super LED Red, 2 in Front Corner 2 in Rear Corner (Taillights)	2
Whelen	VTX609C	Vertex Super LED, White 2 in Front Corner (Headlight)	2
Whelen	295HFSC9	200 Watt Dual Tone	1
Whelen	SA315P	100 WATT Speaker	2
Whelen	SAK1	SA315 Universal Speaker Mounting Bracket Kit	2
Whelen	SSF-POSI6	Plug and Play Headlight Flasher for Chevy Tahoe PPV)	1
Whelen	IJ2DDDD	54 Inch Liberty II Lightbar with 4 Corner LEDS Red/White (White Has Capability for Steady Flood Lighting)	1
Whelen	IJ9HT	Pre Wire for GTT79H Opticom Emitter with Two Tier Super LED Takedown Lights	1
Whelen	795H	GTT Opticom Emitter Installed in Lightbar	1
Whelen	IBDLD	Long LED Linear Lightheads Red/White from Lightbar with (White LEDS Having Capability for Steady Burn for Added Flood Lighting)	4 1
Whelen	IBDSD	Short LED Linear Lightheads Red/White Front Lightbar with (White LEDS Having Capability for Steady Burn for Added Flood Lighting)	2
Whelen	IA3	Pair of LED Alley Lights	1
Whelen	IBDSK	Short LED Linear Lightheads Red/Amber Rear Lightbar	2
Whelen	IBDLK	Long LED Linear Lightheads Red/Amber Rear Lightbar	4
Whelen	IJDCK	Dual Linear LED Lighthead Amber/Red Rear Lightbar	2
Whelen	DP4RRCC	Lamp Dominator Plus 2 White Rear Side Windows	4
Whelen	DBKT4	L Bracket Kit for Dominator Plus	2
Whelen	M7RC	M7 Linear LED Red w/Clear Lens Mounted On Rear Doors	2
Whelen	M4RC	M4 LED Red w/Clear Lens Mounted ON Front and Rear Side Panels	4

Supplier Contact Information:
http://www.whelen.com/ **http://www.setina.com/** **http://www.pro-gard.com/**
http://www.smc-corp.com/ **http://www.havis.com/**

Contact Mark Donovan, Houston Fire Department, at (832) 394-6745 prior to installation for wiring and mounting instructions.

224.10 LIGHT, SUPER LED HIDE-AWAY. CLEAR COLOR, INTERNAL-MOUNTED FOR HEADLIGHTS, CORNER LIGHTS AND TAIL LIGHTS, SINGLE LAMP, SELF-CONTAINED UNIT. WHELEN VERTEX MODEL VTX609C

224.11 LIGHT, SUPER LED HIDE-AWAY. RED COLOR, INTERNAL-MOUNTED FOR HEADLIGHTS, CORNER LIGHTS, AND TAIL LIGHTS, SINGLE LAMP, SELF-CONTAINED UNIT. WHELEN VERTEX MODEL VTX609R

224.15 LIGHT, SUPER LED WARNING. SPLIT RED/BLUE COLOR WITH CLEAR OUTER LENS, TO BE INSTALLED IN ACCORDANCE WITH DEPARTMENT'S INSTRUCTIONS. WHELEN SERIES M4, PRODUCT NO. M4J

224.17 LIGHT, SUPER LED WARNING. SPLIT RED/BLUE COLOR, INSTALLED ON VEHICLE DASH PER DEPARTMENT'S INSTRUCTIONS, WHELEN AVENGER SERIES

OPTIONAL EQUIPMENT SPECIFICATIONS (Continued):

OPTION NO. OPTION DESCRIPTION

225.1 LIGHT PACKAGE FOR POLICE DEPARTMENT FS-COHPD 10422

MANUFACTURER	PART NO.	DESCRIPTION	QUANTITY
Whelen	MJ4	Linear LED Split Light Red/Blue Two Front Grill	2
Whelen	M4	LED Warning Light Red/Blue Color, Rear Door	2
Whelen	VTX609R	Vertex LED Red LED Rear, Tail lights	2
Whelen	AVNT2RBW	Super LED Warning Dual Avenger Red/Blue Dual Avenger, Trio Color Red/Blue/White w/ White Steady Burn	1
Whelen	SA315P	100 WATT Speaker, Black Plastic	1
Whelen	SAK	Universal Speaker Mount for SA315P	1

Supplier Contact Information:
http://www.whelen.com/ **http://www.pptexas.com/** **http://www.pro-gard.com/**

229 SLIDING SIDE DOOR

229.1 HINGED SWING-OUT DOORS, SIDE.

229.2 DUAL SLIDING SIDE DOORS WITH WINDOWS, LEFT & RIGHT SIDES

233 CREW CAB CONFIGURATION, including *56*" CA.

233.1 CREW CAB CONFIGURATION, including 60" CA.

236 BODY SIDE MOLDING - factory installed.

238 FLOOR MATS, Carpeted, Front and Rear, Manufacturer's Standard for Vehicle Series Specified

239 RUBBER FLOOR COVERING, front and rear with pad for passenger vans.

240 ELECTRONIC ENGINE IDLE SPEED CONTROL, OEM WHEN AVAILABLE.

241 ANTILOCK BRAKING SYSTEM (OEM STANDARD)

241.1 ANTILOCK BRAKING SYSTEM, FRONT AND REAR

242 ROLLING DECK, Weatherguard Bed Rat Sliding Platform for specified vehicle series

243 COMBINATION HITCH Must Be Buyers Products No. BH82000 (includes 2" Ball) with PM87 hitch mount and HP6253WC hitch pin (IF ORDERING THIS OPTION, DEPARTMENT MUST ORDER OPTION 213 OR 213.1). (No Substitutions Allowed)

243.1 REPLACEMENT BALL Must Be Buyers Products No. RB2516 (No Substitutions Allowed)

244 TRAILER CONNECTION, female type six-way, mounted and wired.

OPTIONAL EQUIPMENT SPECIFICATIONS (Continued):

OPTION NO.	OPTION DESCRIPTION
246	**RUNNING BOARDS,** OEM for vehicle specified, both driver and passenger sides
247	**CAB STEPS FOR CABS & CHASSIS,** for all doors, mounted, manufacturers' standard for designated vehicle series.
248	**ALARM, ELECTRONIC BACKUP,** SAE Class C, 97db sound level , 6.36 DC volt, approx. 4" length x 3'width x 1.5" height. Federal Signal No. 256 or City approved equal.
249	**HOUR METER**, Hobbs Model 85094, or City approved equal, under-dash mounted, will actuate only with engine running.
250	**DUAL BATTERIES,** 630 CCA each.
250.1	**BATTERY**, ADDITIONAL HEAVY DUTY, minimum 700 CCA, must be compatible and wired to operate in conjunction with OEM heavy duty battery.
251	**ELECTRIC BRAKE CONTROLLER**, Tekonsha Model 9035 or City approved equal, installed and mounted in an accessible location on the dash area of the vehicle.
252	**OPTIONAL cab-to-axle dimension, 84" CA.**
252.1	**OPTIONAL cab-to-axle dimension, 108" CA.**
252.2	**OPTIONAL cab-to-axle dimension, 120" CA.**
253	**CARGO AREA LIGHT**, small to illuminate pickup bed area.
256	**INVERTER, 1400 WATTS, 20 AMPS, 12 VOLT DC TO 110 VOLT AC,** Vanner Model IT12-1400, Dimensions Model DUI-12/1800N or City-approved equal
259	**AUXILIARY CNG TANK,** bed-mounted horizontally, transverse, immediately behind cab.
259.1	**ADDITIONAL CNG TANK(S) -** to be mounted on to underbody of vehicle.
260	**PRISONER TRANSPORT COMPARTMENT CONVERSION** **MANUFACTURER: DEERSKIN MANUFACTURING, INC.** **MODEL: PTV-2HM** **PHONE: 800-880-6089 FAX: 817-523-6685** Outside dimensions: 120" long x 26" wide x 52" high Modular Unit bolts together inside cargo van Double walled and insulated for noise reduction Galvanized steel framing Washable with floor drains 1/8" Diamond Plate aluminum floor and door panels Lighted interior Sliding window in front wall Folding rear step Adaptable to factory rear air conditioning and transferable to another vehicle Emergency exit sliding window in front wall (36" wide x 20" high) Removable panel in center partition to assist in emergency escape

OPTIONAL EQUIPMENT SPECIFICATIONS (Continued):

OPTION
NO. **OPTION DESCRIPTION**

260.1 PRISONER TRANSPORT COMPARTMENT CONVERSION
MANUFACTURER: DEERSKIN MANUFACTURING, INC.
MODEL: PTV-3HM
PHONE: 800-880-6089 FAX: 817-523-6685
2 rear compartments dimensions 90” long x 26” wide x 52” high
1 front compartment dimensions 30” front to back x 48” wide x 52” high
Modular Unit bolts together inside cargo van
Double walled and insulated for noise reduction
Galvanized steel framing
Washable with floor drains
1/8” Diamond Plate aluminum floor and door panels
Lighted interior
Sliding window in front wall
Folding rear step
Adaptable to factory rear air conditioning and transferable to another vehicle
Emergency exit sliding window in front wall (36” wide x 20” high)
Emergency exit hatch (solid) located between front compartment and rear compartments
Removable panel in center partition to assist in emergency escape

261 ALUMINUM BULKHEAD WITH SLIDING PLEXIGLASS WINDOW, 24" X 36" (FABRICATE AND INSTALL).
Will slide to the left only. Bulkhead to have two lower sliding vent Plexiglas windows, 12” x 12”. Interior is to be lined with 3/4" No. 9 flat expanded metal including bulkhead, slides, top and doors. Floor area to be covered with ½" plywood sealed with water sealant and covered with a no-slide surface. Benches will be installed down both sides, front & rear. Right side to have access from side door. Rear will be only across left door. Benches will be made with 2" X 12" sanded & varnished oak plank and welded structural aluminum angle securely attached to body. Auxiliary locking device on both sides and rear doors. Interior lock mechanism is to be disabled. Two roof mounted air vents mounted behind bulkhead for ventilation. One vent on rear door opposite from exhaust pipe. Fabricated step below factory bumper for easy access. Door glass installed in right rear door.

262 BULKHEAD PARTITION, Screen, swing door for full size van, with hinge kit, Weatherguard Model 86500-3-01O or City Approved Equal

264 CAB PROTECTOR (HEADACHE RACK), Must Be RKI Model Nos. as follows: **(No Substitutions Allowed)**
A. WG2 for narrow bed pickup
B. WG3 for Chevrolet and Dodge compacts
C. WG10 for full size wide bed domestics
D. WG11 super duty pickup
E. WG14 Ford compact

265 WINCH, electric, 8,000 lb. capacity, 12 volt, 124:1 gear ratio with 150 ft. 3/16" wire rope and clevis hook. 2.5 HP motor, reversible providing power in/power out operation with manual clutch, automatic disc brakes, and sealed factory lubricated gear and remote control. Unit to be mounted with bumper kit including guard and four-way fair lead roller.

265.1 ACCESSORY KIT for Option No. 265 above shall include the following:
A. 6' choker chain
B. Wire choker rope, 5/16" X 10'
C. 3" X 8' tree protector, nylon strap
D. Snatch block
E. 3/4" X 15' tow strap
F. Vinyl winch cover with tie downs

OPTIONAL EQUIPMENT SPECIFICATIONS (Continued):

OPTION NO.	OPTION DESCRIPTION

268 TRUCK BED EXTENDER FOR 3/4-TON SUBURBAN UTILITY VEHICLES
EXTENDO BED COMPANY, INC, - CUSTOM-DESIGNED ASSEMBLED PRODUCT NO. 6435-R2, 700-LB. TOTAL CARGO CAPACITY
CONTACT PHONE NO. 1-800-752-0706

Complete bed extender assembly unit shall consist of the following items:

Part No.	Description
EBL-857	57-inch length Extended Bed Light Steel Frame Assembly with 48” x 57” plywood platform and safety screen. Full Extension Tray 300-lb. capacity with three-inch tall sides by 26” width by 56” depth
NTR-1737-22	Narrow Tool Rack, 17-inch width x 37-inch depth on 22-inch legs, with two drawers with divider slots and divider slots and locking compartment with hinged lid with electronic push button lock and full length divider.

OPTIONAL EQUIPMENT SPECIFICATIONS
FOR
AUTOMOBILES, VANS, UTILITY VEHICLES, AND LIGHT DUTY TRUCKS

ALL EQUIPMENT LISTED BELOW SHALL BE FACTORY-INSTALLED. IF AN ITEM IS NOT AVAILABLE AS FACTORY-INSTALLED, AFTER-MARKET EQUIPMENT MAY BE SUBSTITUTED FOR THAT ITEM.

OPTION NO.	OPTION DESCRIPTION
1.	**AIR CONDITIONING UNIT** - The unit shall be chassis factory installed and shall be an integral type (not mounted under the dash). The manufacturer's basic air conditioning package shall include a heavy-duty radiator (see Option No. 87). Air conditioning is standard (and therefore not an option) on all series.
2.	**AIR CONDITIONING/ HEATING UNIT, FRONT AND REAR** - The front unit shall be factory installed (no exceptions). The rear unit shall be furnished as a factory-installed combination unit, if available, or as an after-market auxiliary, providing that the unit does not interfere with the headroom requirement, and meets or exceeds the recommendations of, and is sanctioned by, the chassis manufacturer. The after-market auxiliary unit shall be fully warranted for a minimum of 12 months.
2.1	**AIR CONDITIONER UNIT,** rear - factory installed.
15.	**ALTERNATOR**: Manufacturer's heavy-duty increased capacity alternator SAE rated at 120 amperes minimum.
17.	**ALTERNATOR**: Manufacturer's heavy-duty alternator SAE rated at 130 amperes minimum.
17.	**ALTERNATOR** Manufacturer's heavy-duty dual alternators SAR rated at 357 amperes minimum.
24.	**BRAKES, POWER FRONT DISC –** Manufacturer's standard, power front disc brakes.
29.1	**BUMPER, REAR,** OEM standard step type.
37.1	**COLORS, SOLID** - selected from manufacturer's standard colors.
37.5	**COLOR: Yellow - Must be Federal Standard 595B, Color No. 13507** (Qty: 1-4) (No Substitutions Allowed).
37.5	**COLOR: Yellow - Must be Federal Standard 595B, Color No. 13507** (Qty: 5 or more) (No Substitutions Allowed).
45.	**DIFFERENTIAL, LIMITED-SLIP TRACTION TYPE** - The maximum traction type differential shall be Positraction, No-Spin, or equal.
46.	**DOOR LOCKS**, power (all passenger doors). Manufacturer's standard.
49.	**LARGER DISPLACEMENT GASOLINE ENGINE -** Next largest engine available.
50.	**UPGRADE TRIM LEVEL TO LX TRIM FOR SERIES 374C FULL SIZE SEDAN:** Includes 16" Nine Spoke Aluminum Wheels, Electronic Automatic Temperature Control (Etc), Overhead Console With Dome Lamp And Compass, And Rear Seat Reading Lamps.
52.	**FOUR-WHEEL DRIVE –** Four-wheel drive vehicles shall include automatic locking hubs and skid plates.
53	**ELECTRIC SHIFT –** On the fly for 4-wheel drive.
59.1	**TANK(S) FUEL,** to have a minimum total of **thirty-gallon capacity**.
59.3	**TANK(S) FUEL**, to have a minimum total of **thirty-six gallon capacity**.
59.3	**TANK(S) FUEL**, to have a minimum total of **twenty-five gallon capacity**.

OPTIONAL EQUIPMENT SPECIFICATIONS (Continued):

OPTION
NO. OPTION DESCRIPTION

64. **GRILLE GUARD, HEAVY-DUTY** - A heavy-duty grille guard designed to protect the headlamps and grille of a vehicle shall be mounted on the front of vehicle for which it is required. This guard shall be bolted to the bumper with a minimum of two bolts, lock nuts, and washers on each side. Thread-forming bolts or screws are not acceptable. It shall be treated in a chemical bath or dip, or similarly treated for rust prevention prior to application of the final paint coating. The grille guard furnished must be approved by the City Purchasing Agent, in writing, if other than the following:

- Brushguard Model BG – manufactured by Marks Machine, 1101 N. Blue Creek Road, El Campo, TX 77437
- Jumbo Flush Guard Model 500 - manufactured by The Perry Company, P.O. Box 7187, Waco, TX 76714
- Grille Guard Model GG- manufactured by Brown Welding & Mfg., New Braunfels TX 78130
- Grille Guard Model BG-500 - manufactured by Spillar Custom Hitches, Austin, TX 78759

71. **MIRROR, REARVIEW, EXTERIOR, LOW MOUNT TYPE, LEFT AND RIGHT SIDES** - manufacturer's low mount (below eye level, wide view-type mirror), two or three point mounting. Mirror shall meet or exceed the requirements of FMVSS No. 111 and shall have a face size approximately 6" by 9"with an adjustable low-mount bracket. **Extension arms are required on chassis-cab units.**

72. **MIRRORS, REARVIEW, EXTERIOR, TRAILER-TOW-TYPE, EXTENDABLE MANUAL**

73. **MIRRORS, REARVIEW, EXTERIOR, MATCHING LEFT AND RIGHT SIDES** - Each mirror shall have a minimum viewing area of 12 square inches and shall be factory or dealer installed. **Left side mirror shall be remote-control type.**
NOTE: WHEN A SPOTLIGHT IS ALSO SPECIFIED, THE LEFT-SIDE MIRROR SHALL BE MOUNTED TO THE REAR OF THE SPOTLIGHT AND THE OPERATION OF THE TWO SHALL NOT CONFLICT.

73.2 **MIRRORS, REARVIEW, EXTERIOR, MATCHING LEFT AND RIGHT SIDES** - Each mirror shall have a minimum viewing area of 12 square inches and shall be factory or dealer installed. **POWER remote control on both left and right sides.**
NOTE: WHEN A SPOTLIGHT IS ALSO SPECIFIED, THE LEFT-SIDE MIRROR SHALL BE MOUNTED TO THE REAR OF THE SPOTLIGHT AND THE OPERATION OF THE TWO SHALL NOT CONFLICT.

77. **STEERING, POWER** - manufacturer's standard.

88. **RADIATOR, HEAVY-DUTY TYPE** - Radiator shall be furnished with the same capacity offered by the manufacturer for the Series when factory air conditioning is supplied. Heavy-duty radiators **are required** with all air conditioning options.

91. **RADIO, AM-FM -** Radio shall be a chassis factory-installed standard brand AM-FM transistor radio. Antenna, which may be an integral part of the windshield, shall be furnished and mounted.

95. **NAVIGATION SYSTEM,** with display and integrated backup camera (Manufacturer's OEM Equipment)

97. **SEAT PASSENGER** (for Cargo Vans)

99. **REAR SEAT** (for Utility and Carryall Vehicles) - additional seat to increase total seating capacity to 8 or more.

103. **SHOCK ABSORBERS, HEAVY-DUTY** - Shock absorber shall be the manufacturer's heavy-duty type in lieu of the regular-duty shock absorbers.

107. **SPARE WHEEL and TIRE, FULL SIZE CONVENTIONAL TYPE, MOUNTED, IN LIEU OF SPACE SAVING TIRE.** JACK, HANDLE and LUG WRENCH TO BE INCLUDED. The conventional spare tire and wheel shall be alike in the type and size of tires as to those mounted on the vehicle front wheels.
NOTE: IF THIS OPTION IS ORDERED, A SPACE SAVING TIRE SHALL NOT BE DELIVERED WITH THE VEHICLE.

OPTIONAL EQUIPMENT SPECIFICATIONS (Continued):

OPTION NO.	OPTION DESCRIPTION

107.1 SPARE WHEEL AND TIRE, Same as Option 107, except with lockable wheel carrier, including locking device.

111A SPOTLIGHT, CHROME must be Unity 325 halogen or City-approved equal, and shall have a 6-inch diameter white lens for current model vehicle. It shall be mounted on the left side of the windshield post or quarter panel, either by the chassis manufacturer or by means of an approved bracket. The local installation, if required, shall be accomplished in a workmanship-like manner. The spotlight and the exterior rearview mirror shall not conflict.

111.2 SPOTLIGHTS – same as Option 111A, except dual, pillar or door mounted on left & right sides.

115. STEERING WHEEL, TILT, manufacturer's standard.

116. CRUISE CONTROL (includes Option 115, tilt steering wheel)

TOOLBOXES - STEEL FRONT CROSSOVER TYPE AND SIDE-BOXES:
The toolboxes furnished must be approved by the City Purchasing Agent, in writing, if other than the following RKI or Weather-Guard brands and Model Numbers listed below.

121.1 CROSS-BOX WITH DOUBLE LID – RKI Model ST63 or Weather Guard 125-3-01 for full size pickups

122.1 CROSS-BOX – RKI Model C63 or Weather-Guard 126-3-01 for full size pickups.

122.2 CROSS-BOX – RKI Model C56 or Weather-Guard 136-3-01 for mini-pickups.

122.3 SIDE BOX – RKI Model 61S or Weather-Guard 175-3-01.

122.4 SIDE BOX – RKI Model 43S or Weather-Guard 185-3-01.

122.5 SIDE BOX (Wide) – RKI Model 67SW or City-approved equal for full size pickups.

122.5A TOOL BOX TRAY – Tray for Tool Box Option No. 122.5, RKI Model 67SW or City-approved equal

TOOL BOXES - ALUMINUM FRONT CROSSOVER TYPE AND SIDE BOXES:
The toolboxes furnished must be approved by the City Purchasing Agent, in writing, if other than the following RKI or Weather-Guard brands and Model Numbers listed below.

123.1 CROSS-BOX – RKI Model C63A or Weather-Guard Model 124-0-02.

123.2 SIDE BOX – RKI Model 67SA or Weather-Guard Model 174-0-01.

123.3 SIDE BOX – RKI Model 50SA or Weather-Guard Model 184-0-01.

123.5 CROSS-BOX, LOW PROFILE - RKI Model C63LPA or Weather-Guard Model 121-0-01 for full size pickups.

127. TRANSMISSION, MANUAL, manufacturers' standard for the engines furnished for all series

127.1 TRANSMISSION, MANUAL with PTO provisions, manufacturer's standard for the engines furnished for all series

128. TRANSMISSION, AUTOMATIC, manufacturer's standard for the engines furnished for all series

128.1 TRANSMISSION, AUTOMATIC WITH PTO PROVISION, manufacturer's standard for the engines furnished for all series

OPTIONAL EQUIPMENT SPECIFICATIONS (Continued):

OPTION NO.	OPTION DESCRIPTION
128.2	**TRANSMISSION, CVT** – Continuous Variable Transmission, manufacturer's standard for the engines furnished for all series
128.3	**TRANSMISSION, AUTOMATIC HYBIRD –** Manufacturer's standard for the engines furnished for hybrid series
129.	**AUXILIARY IDLE CONTROL KIT**
132.1	**AUTOMATIC TRANSMISSION OIL COOLER**, heavy duty, auxiliary, externally mounted only, OEM if available.
136.1	**WARRANTY, MANUFACTURER'S EXTENDED (NO EXCEPTIONS) FOR VEHICLES AND CABS & CHASSIS** - shall extend the manufacturer's standard warranty, as specified herein, **to a total period of six years and 75,000 miles**, whichever comes first, **with $200.00 deductible**. Ford – Premium Extended Service Plan General Motors – Major Guard Extended Service Plan Daimler Chrysler – Maximum Care Upgrade
136.2	**WARRANTY, MANUFACTURER'S EXTENDED (NO EXCEPTIONS) FOR VEHICLES AND CABS & CHASSIS** - shall extend the manufacturer's standard bumper-to-bumper warranty, as specified herein, **to a total period of six years and 100,000-miles**, whichever comes first, **with $200.00 deductible**.
136.3	**WARRANTY, MANUFACTURER'S EXTENDED (NO EXCEPTIONS) FOR VEHICLES AND CABS & CHASSIS** – shall extend the manufacturer's standard warranty, as specified herein, **to a total period of four years and 100,000 miles**, whichever comes first, **with $200.00 deductible.**
140.1	**WINDOW TINT,** darkest maximum tint allowed by State Law, whether factory or dealer installed.
140.2	**WINDOW TINT, AUTOMOTIVE GRADE, FOR POLICE DEPARTMENT,** Tint light transition shall be 35% for front door glass, and 25-27% for rear door and rear window glass, whether installed by factory or dealer.
144	**WINDSHIELD WIPERS, INTERMITTENT-TYPE,** with integral windshield washer - must be manufacturers standard, factory installed.
145	**WINDSHIELD WIPER, REAR WINDOW,** limited availability with Integral Washer (N/A with panel doors)
149	**REAR DOOR GLASS -** (For Cargo Vans - glass must be factory installed; no dealer-installed glass is acceptable)
151	**GLASS IN ALL DOORS** - must be factory installed; no dealer-installed glass is acceptable.
153	**GLASS IN EACH DOOR AND SIDE PANEL (NOTE: SAME AS WINDOW VAN)**
200	**WHEEL COVERS,** OEM standard, set of four.
200.1	**HUBCAPS,** OEM Standard, set of four.
201	**UPGRADE TIRES AND WHEELS**
201.1	**UPGRADE TIRES AND WHEELS FOR POLICE DEPARTMENT,** with 16 inch, 9-spoke aluminum wheels and tires
204	**SINGLE KEY LOCKING**, each vehicle keyed separately. Includes a minimum of two remotes with keys and two additional door/ignition conventional keys
205	**CLOTH UPHOLSTERY,** front and rear w/split front seat (50/50, 55/45, 45/45).

OPTIONAL EQUIPMENT SPECIFICATIONS (Continued):

OPTION NO.	OPTION DESCRIPTION
206	**REMOVABLE REAR PASSENGER SEATS,** for passenger vans.
207	**POWER WINDOWS,** manufacturer's standard
208	**REAR WINDOW DEFROSTER INCLUDING REAR WIPERS WHEN AVAILABLE.**
209	**POWER DOOR LOCKS / POWER WINDOWS COMBINATION feature,** manufacturers' standard
210	**SPECIAL SEATING REQUIREMENT**: Hi-back front bucket seats, less large center console and one (1) only center bench seat for three passengers. All seating shall be of identical material.
210.1	**SPECIAL SEATING**: Front seat, 40/40 with console.
210.5	**FORD XLT / CHEVROLET LS TRIM LEVEL UPGRADE: BUCKET SEATS, CENTER CONSOLE WITH SHIFTER IN CONSOLE.**
210.8	**VEHICLE UPGRADE FOR FORD EXPEDITION EL 2WD LIMITED MODEL, FORD ORDER CODE K1K, WHICH INCLUDES ALL LIMITED MODEL VEHICLE STANDARD EQUIPMENT AND FEATURES. ALSO INCLUDES THE FOLLOWING ADDITIONAL EQUIPMENT: 301A EQUIPMENT GROUP, 58F NAVIGATION SYSTEM WITH H/D RADIO, 64P 20" POLISHED ALUMINUM WHEELS, 65R POWER CODE REMOTE START SYSTEM, ECCO BACKUP ALARM, AND MOUNTED FRONT BUMPER PARKING ASSIST SYSTEM. BLACK EXTERIOR COLOR AND CHARCOAL BLACK INTERIOR COLOR.**
210.9	**VEHICLE UPGRADE FOR CHEVROLET SUBURBAN 2WD 1500 LTZ, CHEVROLET ORDER CODE CC10906, WHICH INCLUDES ALL 1500 LTZ MODEL VEHICLE STANDARD EQUIPMENT AND FEATURES. ALSO INCLUDES THE FOLLOWING ADDITIONAL EQUIPMENT: PCJ EQUIPMENT GROUP, UFT SIDE BLIND ZONE ALERT AND VLI REAR CARGO MAT. BLACK GRANITE METALLIC EXTERIOR COLOR AND EBONY INTERIOR COLOR.**
211	**CLOTH SEAT(S), OEM STANDARD**
212	**HEAVY-DUTY SUSPENSION W/FRONT STABILIZER BARS**
212.1	**HEAVY-DUTY SUSPENSION, 11,200LBS GVWR**
213	**RECEIVER HITCH, Class III, with ball mount, pin & clip and 2" chrome ball. Reinforced to the frame. To includes TRAILER CONNECTION.**
213.1	**FACTORY INSTALLED MANUFACTURER'S STANDARD TRAILER TOWING PACKAGE** with receiver hitch. Ball mount, pin & clip, 2" chrome ball mounted to receiver hitch and **TRAILER CONNECTION** shall also be provided (either factory installed if available or dealer installed).
213.2	**TRAILER TOWING PACKAGE INCLUDING** 7-Wire Harness, Trailer Brake Wiring Kit, Trailer Tow Guide (either factory installed if available or dealer installed).
213.3	**FACTORY INSTALLED MANUFACTURER'S STANDARD TRAILER TOWING PACKAGE FOR 4-WD** with receiver hitch. Ball mount, pin & clip, 2" chrome ball mounted to receiver hitch and **TRAILER CONNECTION,** shall also be provided (either factory installed if available or dealer installed).
213.4	**GOOSENECK TOWING PACKAGE** includes one frame under bed cross member, integrated 7-pin connector on driver side pickup bed wall, 2-5/16" ball assembly, trailer brake control and limited slip axle. Includes reducer for receiver hitch and 7-way to 6-way adaptor. Either factory installed if available or dealer installed.

OPTIONAL EQUIPMENT SPECIFICATIONS (Continued):

OPTION NO.	OPTION DESCRIPTION
214	**LIFTGATE, 1,300 lb. capacity,** single unit electric/hydraulic with 4 inch loading ramp as part of platform.
214.1	**LIFTGATE, FOLD-DOWN TYPE:** • **Ford Vans – 1,000-lb. capacity, electric/hydraulic fold down loading ramp with 4 inch loading ramp as part of platform** • **Chevrolet Vans – 1000-lb. capacity, electric/hydraulic fold down loading ramp. Tommy Gate Mdl No. CVL-AD 7330 EF52 or City-approved equal.**
214.3	**LIGHT KIT FOR OPTION 214 OR OPTION 214.1**
215	**CARPET ONLY** front and rear.
216	**PICKUP BED AND TAILGATE LINER, POLYURETHANE,** over the rail design where applicable, heavy-duty, single piece and specifically designed for model pickup proposed.
217	**SPRAY IN BED AND TAILGATE LINER**, 1/4" bed and 1/8" walls. Color shall be black. For Chevrolet and Dodge Models, includes over the rail spray and for Ford Models, up to the rails. Rhino-Linings Tuff-Stuff or Line-X or City-approved equal. Lifetime warranty shall be provided.
223	**OPTIONAL DIFFERENTIAL RATIO,** Contractor/Supplier shall supply an optional differential ratio compatible with the engine/transmission combination in lieu of the vehicle's standard differential.
224.4	**STROBE LIGHT, LOW PROFILE,** mounted on roof. Lighted switch mounted on dash in a convenient location. Strobe Lights must meet the J1318 standards and be listed with AMECA. Double-flash, minimum five joules, maximum height 5" amber in color, 1-year warranty on bulb and 2-1/2-year warranty on power supply, Whelen Model No. 2012P, Target Tech Model SY420200, Nova Model SB4050A, or City approved equal.
224.5	**REMOTE CONTROL SPOTLIGHT ROOF-MOUNTED,** Signal STAT Model 730W or City-approved equal.
224.6	**SPOTLIGHTS, DUAL, REMOTE CONTROL ROOF-MOUNTED**, Signal STAT Model 730W or City-approved equal.

OPTIONAL EQUIPMENT SPECIFICATIONS (Continued):

OPTION
NO. **OPTION DESCRIPTION**

224.7 LIGHTBAR AND SIREN PACKAGE, Whelen Model No. A175384935
All amber lenses except clear lenses on alley lights and take down lights. Unit shall be mounted, wired and ready for service. (NO SUBSTITUTIONS ALLOWED)
Consists of:

FL2AAAA	55" Freedom LED Lightbar, with Four Corner LEDS
FLDAA	Pair of Amber Inboard LEDS
FLDAA	Pair of Amber Inboard LEDS
FLH2CC	Pair Take Down Lights
FLALY	Pair Alley Lights
SA314A	Siren Speaker with Mounting Bracket (Mdl. No. Varies with Vehicle)
295HFS4	Remote Siren Amplifier with 9-Switch Light Control and Microphone (Surface Mount Head)

224.8 LIGHT BAR, MINIFREEDOM LED, shall be Whelen Model FT8AAAAP (No Substitutions Allowed)
With all amber lenses permanently mounted, wired, fused and high-low power switch to be fully operational. Switch to be high/low density type and placed in vehicle in an easily reachable location proximate to the driver. Equipment shall be roof-mounted with the following exception: If purchased for a truck with a headache rack, Option No. 264, then mount the light bar to the headache rack unless otherwise specified on the City Purchase Order.

224.9 LIGHT PACKAGE FOR FIRE DEPT., FS-CHVHFD, includes the following parts and installation of same:

MANUFACTURER	PART #	DESCRIPTION	QUANTITY
Whelen	MBPS07JJ	Mirror Beams	1
Whelen	S690CCCC	Corner Strobes	1
Whelen	295HFSC9	Siren	1
Whelen	SA315P	Speaker	2
Whelen	SAK1	Speaker Bracket	2
Setina	PB400	Push Bumper	1
Whelen	RBKT2	TIR3 Housing	2
Whelen	RSR03ZCR	TIR3 Red LED	2
Whelen	RSB03ZCR	TIR3 Blue LED	2
Whelen	UHF2150A	Head Light Flasher	1
Whelen	FL2RRRR	Freedom lightbar, red outboards	1
Whelen	FLDAA	Freedom opt. add 2 led amb/amb	1
Whelen	FLDCC	Inboard LED's in lightbar	1
Whelen	FLDRR	add 400 series liner led flashers, 2/red over red	3
Whelen	9592	Opticom (3M)	1
Whelen	9UOPT155	Wiring for Opticom	1
Whelen	SLPMMRB	Slimlighter for rear window	2
Havis Shield	C-1400	Havis Console	1
Havis Shield	C-TM-GMC	Track mount 32" Base Assembly 00-04	1
Havis Shield	CB-1	Armrest with 3 outlet plugs	1
SMC	CPUBRK-2	CPU Mount	1
SMC	MP410-STL	Multi-Position Plate	1
Havis Shield	C-SW-3	Switch Box	1
Whelen	ULF44	Flasher	1
Whelen	40RC5SCR	400 LED	6
Whelen	4TSMAC	400 Flange	6
Progard	W-3500	Petition screen	1

Supplier Contact Information:
http://www.whelen.com/ **http://www.pro-gard.com/** **http://www.setina.com/**
http://www.smc-corp.com/ **http://www.havis.com/**

Contact Chief McDonald, Houston Fire Department, at (832) 394-6718 prior to installation for wiring and mounting instructions.

OPTIONAL EQUIPMENT SPECIFICATIONS (Continued):

OPTION NO. OPTION DESCRIPTION

224.10 LIGHT, SUPER LED HIDE-AWAY. CLEAR COLOR, INTERNAL-MOUNTED FOR HEADLIGHTS, CORNER LIGHTS AND TAIL LIGHTS, SINGLE LAMP, SELF-CONTAINED UNIT. WHELEN VERTEX MODEL VTX609C

224.11 LIGHT, SUPER LED HIDE-AWAY. RED COLOR, INTERNAL-MOUNTED FOR HEADLIGHTS, CORNER LIGHTS, AND TAIL LIGHTS, SINGLE LAMP, SELF-CONTAINED UNIT. WHELEN VERTEX MODEL VTX609R

224.15 LIGHT, SUPER LED WARNING. RED/BLUE COLOR, TO BE INSTALLED IN ACCORDANCE WITH DEPARTMENT'S INSTRUCTIONS. WHELEN SERIES M4, PRODUCT NO. M4JC

224.17 LIGHT, SUPER LED WARNING. RED/BLUE COLOR, INSTALLED ON VEHICLE DASH. WHELEN AVENGER SERIES

225.1 LIGHT PACKAGE FOR POLICE DEPARTMENT, FS-COHPD

MANUFACTURER	PART NO.	DESCRIPTION	QUANTITY
Whelen	M4	LED Warning Light Red/Blue Color, Front Grill	2
Whelen	M4	LED Warning Light Red/Blue Color, Rear Door	2
Whelen	Vertex	LED Hide-Away Light Red, Tail lights	2
Whelen	Avenger	LED Warning Light Red/Blue Dual, Vehicle Dash	1
Whelen	SA315P	Speaker, Black Plastic	1
Whelen	SA315	Mounting Kit	1
Plastix Plus	5000	Console	1
Pro-Gard Products	IIIA	Ballistic Door Panel, Driver Side, Front	1
Pro-Gard Products	IIIA	Ballistic Door Panel, Passenger Side, Front	1

Supplier Contact Information:
http://www.whelen.com/ http://www.pptexas.com/ http://www.pro-gard.com/

229 SLIDING SIDE DOOR.

229.1 HINGED SWING-OUT DOORS, SIDE.

229.2 DUAL SLIDING SIDE DOORS WITH WINDOWS, LEFT & RIGHT SIDES

233 CREW CAB CONFIGURATION, including *56*" CA.

233.1 CREW CAB CONFIGURATION, including 60" CA.

236 BODY SIDE MOLDING - factory installed.

238 FLOOR MATS, Carpeted, Front and Rear, Manufacturer's Standard for Vehicle Series Specified

239 RUBBER FLOOR COVERING, front and rear with pad for passenger vans.

240 ELECTRONIC ENGINE IDLE SPEED CONTROL, OEM WHEN AVAILABLE.

242 ANTILOCK BRAKING SYSTEM (OEM STANDARD)

241.1 ANTILOCK BRAKING SYSTEM, FRONT AND REAR

242 ROLLING DECK, Weatherguard Bed Rat Sliding Platform for specified vehicle series

243 COMBINATION HITCH, Must Be Buyers Products No. BH820000 with PM87 hitch mount and HP6253 WC hitch pin (IF ORDERING THIS OPTION, DEPARTMENT MUST ORDER OPTION 213 OR 213.1). (No Substitutions Allowed)

OPTIONAL EQUIPMENT SPECIFICATIONS (Continued):

OPTION NO.	OPTION DESCRIPTION
243.2	**REPLACEMENT BALL, Must Be Buyers Products No. RB2516** (No Substitutions Allowed)
244	**TRAILER CONNECTION**, female type six-way, mounted and wired.
246	**RUNNING BOARDS,** OEM for vehicle specified, both driver and passenger sides
247	**CAB STEPS FOR CABS & CHASSIS,** for all doors, mounted, manufacturers' standard for designated vehicle series.
248	**ALARM, ELECTRONIC BACKUP,** SAE Class C, 97db sound level , 6.36 DC volt, approx. 4" length x 3'width x 1.5" height. Federal Signal No. 256 or City approved equal.
249	**HOUR METER**, Hobbs Model 85094, or City approved equal, under-dash mounted, will actuate only with engine running.
250	**DUAL BATTERIES,** 630 CCA each.
250.1	**BATTERY**, ADDITIONAL HEAVY DUTY, minimum 700 CCA, must be compatible and wired to operate in conjunction with OEM heavy duty battery.
251	**ELECTRIC BRAKE CONTROLLER**, Tekonsha Model 9035 or City approved equal, installed and mounted in an accessible location on the dash area of the vehicle and including a female six-way electrical connector mounted on the rear bumper of the vehicle.
252	**OPTIONAL cab-to-axle dimension, 84" CA.**
252.1	**OPTIONAL cab-to-axle dimension, 108" CA.**
252.2	**OPTIONAL cab-to-axle dimension, 120" CA.**
253	**CARGO AREA LIGHT**, small to illuminate pickup bed area.
257	**INVERTER, 1400 WATTS, 20 AMPS, 12 VOLT DC TO 110 VOLT AC,** Vanner Model IT12-1400, Dimensions Model DUI-12/1800N or City-approved equal
259	**AUXILIARY CNG TANK,** bed-mounted horizontally, transverse, immediately behind cab.
259.1	**ADDITIONAL CNG TANK(S) -** to be mounted on to underbody of vehicle.
260	**PRISONER TRANSPORT COMPARTMENT CONVERSION** **MANUFACTURER: DEERSKIN MANUFACTURING, INC. MODEL: PTV-2HM** **PHONE: 800-880-6089 FAX: 817-523-6685** Outside dimensions: 120" long x 26" wide x 52" high Modular Unit bolts together inside cargo van Double walled and insulated for noise reduction Galvanized steel framing Washable with floor drains 1/8" Diamond Plate aluminum floor and door panels Lighted interior Sliding window in front wall Folding rear step Adaptable to factory rear air conditioning and transferable to another vehicle Emergency exit sliding window in front wall (36" wide x 20" high) Removable panel in center partition to assist in emergency escape

OPTIONAL EQUIPMENT SPECIFICATIONS (Continued):

OPTION NO.	OPTION DESCRIPTION

260.1 **PRISONER TRANSPORT COMPARTMENT CONVERSION**
MANUFACTURER: DEERSKIN MANUFACTURING, INC.
MODEL: PTV-3HM PHONE: 800-880-6089 FAX: 817-523-6685
2 rear compartments dimensions 90” long x 26” wide x 52” high
1 front compartment dimensions 30” front to back x 48” wide x 52” high
Modular Unit bolts together inside cargo van
Double walled and insulated for noise reduction
Galvanized steel framing
Washable with floor drains
1/8” Diamond Plate aluminum floor and door panels
Lighted interior
Sliding window in front wall
Folding rear step
Adaptable to factory rear air conditioning and transferable to another vehicle
Emergency exit sliding window in front wall (36” wide x 20” high)
Emergency exit hatch (solid) located between front compartment and rear compartments
Removable panel in center partition to assist in emergency escape

261 **ALUMINUM BULKHEAD WITH SLIDING PLEXIGLASS WINDOW, 24" X 36" (FABRICATE AND INSTALL).** Will slide to the left only. Bulkhead to have two lower sliding vent Plexiglas windows, 12” x 12”. Interior is to be lined with 3/4" No. 9 flat expanded metal including bulkhead, slides, top and doors. Floor area to be covered with ½" plywood sealed with water sealant and covered with a no-slide surface. Benches will be installed down both sides, front & rear. Right side to have access from side door. Rear will be only across left door. Benches will be made with 2" X 12" sanded & varnished oak plank and welded structural aluminum angle securely attached to body. Auxiliary locking device on both sides and rear doors. Interior lock mechanism is to be disabled. Two roof mounted air vents mounted behind bulkhead for ventilation. One vent on rear door opposite from exhaust pipe. Fabricated step below factory bumper for easy access. Door glass installed in right rear door.

262 **BULKHEAD PARTITION,** Screen, Swing Door for Full Size Van, with hinge kit, Weatherguard Model 86500-3-010 or City Approved Equal

264 **CAB PROTECTOR (HEADACHE RACK), Must Be** RKI Model Nos. as follows: **(No Substitutions Allowed)**
A. WG2 for narrow bed pickup
B. WG3 for Chevrolet and Dodge compacts
C. WG10 for full size wide bed domestics
D. WG11 super duty pickup
E. WG14 Ford compact

265 **WINCH,** electric, 8,000 lb. capacity, 12 volt, 124:1 gear ratio with 150 ft. 3/16" wire rope and clevis hook. 2.5 HP motor, reversible providing power in/power out operation with manual clutch, automatic disc brakes, and sealed factory lubricated gear and remote control. Unit to be mounted with bumper kit including guard and four-way fair lead roller.

265.1 **ACCESSORY KIT** for Option No. 265 above shall include the following:
A. 6' choker chain
B. Wire choker rope, 5/16" X 10'
C. 3" X 8' tree protector, nylon strap
D. Snatch block
E. 3/4" X 15' tow strap
F. Vinyl winch cover with tie downs

OPTIONAL EQUIPMENT SPECIFICATIONS (Continued):

OPTION NO.	OPTION DESCRIPTION
268	**TRUCK BED EXTENDER FOR 3/4-TON SUBURBAN UTILITY VEHICLES** **EXTENDO BED COMPANY, INC, - CUSTOM-DESIGNED ASSEMBLED PRODUCT NO. 6435-R2, 700-LB. TOTAL CARGO CAPACITY** **CONTACT PHONE NO. 1-800-752-0706**

Complete bed extender assembly unit shall consist of the following items:

Part No.	Description
EBL-857	57-inch length Extended Bed Light Steel Frame Assembly with 48” x 57” plywood platform and safety screen. Full Extension Tray 300-lb. capacity with three-inch tall sides by 26” width by 56” depth
NTR-1737-22	Narrow Tool Rack, 17-inch width x 37-inch depth on 22-inch legs, with two drawers with divider slots and divider slots and locking compartment with hinged lid with electronic push button lock and full length divider.

SPECIFICATIONS FOR 3/4 OR 1 TON SINGLE OR DUAL WHEEL UTILITY SERVICE BODIES

1.0 GENERAL:

1.1. All bodies offered under this Invitation to Bid shall conform to all applicable specifications listed herein.

1.2 All service bodies shall be made with Galvaneal Steel.

2.0 FLOOR

2.1 Standard Treadplate, minimum 12 gauge

3.0 CROSSMEMBERS CSHAPED:

3.1 Front and rear, 10 gauge

3.2 3/4 ton body with intermediate cross members with minimum 2 braces, 10 gauge

3.3 One-ton body with intermediate cross members with minimum 3 braces, 10 gauge

3.4 Intermediate cross sill extension with minimum of 2 sill extensions, 10 gauge

4.0 LONGITUDINAL FLOOR STIFFENERS:

4.1 Hat channel shape, minimum 3 each, 14 gauge

5.0 SIDE AND ENDS:

5.1 Sides, ends, and all skin panels shall be minimum 16 gauge

6.0 TOP OF BODY:

6.1 Top of body panel with longitudinal corrugation or internal support, 16 gauge

6.2 Opening-type, 16 gauge with two safety mechanical lid props or gas cylinder

7.0 DOORS:

7.1 Double panel, 20 gauge

7.2 Opening restraints, chain or cable or spring tensioner on all doors, one on vertical and two on horizontal

7.3 Hinges, OEM standard, bolted or riveted preferred.

7.4 Locks, T-handle, D-ring or paddle-latch type, mechanical shaft linkage, no chain or cable. All locks for one body shall be keyed alike.

7.5 Each body shall be keyed differently.

7.6 Seals shall be compression-type on all doors, automotive type.

8.0 PAINT:

8.1 On the outside of the body only, the supplier shall use acrylic enamel with hardener.

8.2 Bodies shall come from factory with a rust preventative primer.

SPECIFICATIONS FOR UTILITY SERVICE BODIES (Continued):

8.0 PAINT (CONTINUED)

8.3 Body shall be the same color as cab.

8.4 Any welding done at supplier's shop shall be refinished with the same type of primer. Inside of compartments shall include doors to be painted with a light color primer. If galvanized shelving is used, primer shall not be required.

9.0 SHELVES:

9.1 Shall be 18 gauge galvanized steel.

9.2 Front vertical, two (2) per side with 4" spacing for dividers and 20 dividers per unit.

9.3 Rear, two (2) trays per side slotted with dividers.

9.4 Horizontal, one (1) per side, OEM standard on dividers.

10.0 LIGHTS:

10.1 All lights and reflectors required by law.

10.2 To include back-up lights, license plate bracket and light.

10.3 Stick-on reflectors will be acceptable. Shall be 3M Products (no substitutions allowed).

10.4 Tail and back-up lights shall be OEM standard rubber-mounted with light mount.

10.5 All lights shall be attached with 3/16 aluminum "pop" rivets.

11.0 MOUNTING:

11.1 Necessary frame extension may be welded in place provided such work is confined to the area behind the rear spring hanger and does not void the CHASSIS manufacturer's frame warranty.

11.2 No wood spacers shall be permitted.

12.0 REAR OF BODY:

12.1 No open space shall be allowed between the top of bumper and load space area.

13.0 BUMPER:

13.1 Manufacturer’s standard service body bumper will be provided

SPECIFICATIONS FOR UTILITY SERVICE BODIES (Continued):

OPTIONAL EQUIPMENT FOR UTILITY SERVICE BODIES:

OPT. NO.	OPTION DESCRIPTION
2.1	OVERHEAD LADDER RACKS WITH ADJUSTABLE BRACKET IS NOT AVAILABLE WITH CRANE
2.2	SIDE-MOUNTED LADDER RACKS (Note: Not available with Option No. 2.20)
2.3	LADDER RACK W/ CONDUIT CARRIER, 6" x 6" BOXED ENDS FOR 10-FOOT CONDUIT (PASSENGER SIDE), MOUNTED ON BODY EXTENDING FORWARD TO CLEAR CAB, BRACED FROM FRONT TO REAR WITH 1-INCH PIPE BELOW RADIUS ON EACH SIDE IS NOT AVAILABLE WITH CRANE.
2.4	SIDE MOUNTED- MOUNTED LADDER RACK WITH CONDUIT CARRIER, 6X6 BOXED ENDS FOR 10 FOOT CONDUIT STREETSIDE ONLY.
2.5	VISE RACK WITH PIPE HANGER IS NOT AVAILABLE WITH CRANE
2.6	TELESCOPING TOP WITH TAILGATE ENCLOSURE
2.7	REAR BUMPER, 8 INCH, MANUFACTURER'S STANDARD FOR BODY SPECIFIED. BUMPER SHALL BE MANUFACTURED WITH TREADPLATE OR EQUAL. MUST BE CAPABLE OF PULLING 5,000 LBS. WITH TONGUE WEIGHT OF 500 LBS. BUMPER SHALL INCLUDE THE FOLLOWING ITEMS: ONE (1) PINTLE HITCH MOUNTED, EITHER A HOLLAND MODEL PH-16-B WITH 2" BALL OR A MODEL PH-16-BA WITH 2-5/16" BALL, AS SPECIFIED BY CITY DEPARTMENT AT TIME OF ORDER; TWO (2) 1" OD "D" RINGS, BUYERS NO. B48 OR EQUAL, ONE (1) MOUNTED ON EACH SIDE OF THE PINTLE HITCH; MOUNT THE VEHICLE CONNECTOR IF EQUIPPED.
2.8	REAR BUMPER, 8 INCH, MANUFACTURER'S STANDARD FOR BODY SPECIFIED. BUMPER SHALL BE MANUFACTURED WITH "GRIP STRUT" OR EQUAL. MUST BE CAPABLE OF PULLING 5,000 LBS. WITH TONGUE WEIGHT OF 500 LBS. BUMPER SHALL INCLUDE THE FOLLOWING ITEMS: ONE (1) PINTLE HITCH MOUNTED, EITHER A HOLLAND MODEL PH-16-B WITH 2" BALL OR A MODEL PH-16-BA WITH 2-5/16" BALL, AS SPECIFIED BY CITY DEPARTMENT AT TIME OF ORDER; TWO (2) 1" OD "D" RINGS, BUYERS NO. B48 OR EQUAL, ONE (1) MOUNTED ON EACH SIDE OF THE PINTLE HITCH; MOUNT THE VEHICLE CONNECTOR IF EQUIPPED.
2.9	REAR BUMPER, 12 INCH, MANUFACTURER'S STANDARD FOR BODY SPECIFIED. BUMPER SHALL BE MANUFACTURED WITH TREADPLATE OR EQUAL. MUST BE CAPABLE OF PULLING 5000 LBS. WITH TONGUE WEIGHT OF 500 LBS. BUMPER SHALL INCLUDE THE FOLLOWING ITEMS: ONE (1) PINTLE HITCH MOUNTED, EITHER A HOLLAND MODEL PH-16-B WITH 2" BALL OR A MODEL PH-16-BA WITH 2-5/16" BALL, AS SPECIFIED BY CITY DEPARTMENT AT TIME OF ORDER; TWO (2) 1" OD "D" RINGS, BUYERS NO. B48 OR EQUAL, ONE (1) MOUNTED ON EACH SIDE OF THE PINTLE HITCH; MOUNT THE VEHICLE CONNECTOR IF EQUIPPED.
2.10	REAR BUMPER, 12 INCH, MANUFACTURER'S STANDARD FOR BODY SPECIFIED. BUMPER SHALL BE MANUFACTURED WITH "GRIP STRUT" OR EQUAL. MUST BE CAPABLE OF PULLING 5000 LBS. WITH TONGUE WEIGHT OF 500 LBS. BUMPER SHALL INCLUDE THE FOLLOWING ITEMS: ONE (1) PINTLE HITCH MOUNTED, EITHER A HOLLAND MODEL PH-16-B WITH 2" BALL OR A MODEL PH-16-BA WITH 2-5/16" BALL, AS SPECIFIED BY CITY DEPARTMENT AT TIME OF ORDER; TWO (2) 1" OD "D" RINGS, BUYERS NO. B48 OR EQUAL, ONE (1) MOUNTED ON EACH SIDE OF THE PINTLE HITCH; MOUNT THE VEHICLE CONNECTOR IF EQUIPPED.
2.11	CENTRAL LOCKING SYSTEM, O.E.M. STANDARD, INTERNAL, BOTH SIDES.
2.12	TREADPLATE, 3/16" FOR FLOOR
2.13	RHINO LININGS TUFF-STUFF OR EQUAL ANTI-SLIP COVERING FOR FLOOR
2.14	OPTIONAL TREADPLATE OVERLAY OF INSIDE OF BODY, 16 GAUGE

SPECIFICATIONS FOR UTILITY SERVICE BODIES: (Continued)

OPTIONAL EQUIPMENT FOR UTILITY SERVICE BODIES: (Continued)

OPT. NO.	OPTION DESCRIPTION
2.15	OPTIONAL TREADPLATE OVERLAY OF TOP OF BODY PANEL, 16 GAUGE (Note: Not available with Option No. 2.20)
2.16	RHINO LININGS TUFF-STUFF OR EQUAL ANTI-SLIP COVERING FOR OPTION 2.15
2.17	(STD) LOCKING WATER COOLER HOLDER. MOUNTED INSIDE REAR VERTICAL COMPARTMENT OR OUTSIDE OF BODY. SAMPLE SIZE WOULD BE GOTT 3 GALLON WATER COOLER.
2.18	(STD.) TAILGATE 6" HIGH, O.E.M. STANDARD, WITH BRACKETS
2.19	SIX-WAY CONNECTOR MOUNTED, DRAW-TITE 18150 OR 18160 OR EQUAL
2.20	TOP-OPENING COMPARTMENT ON BOTH SIDE PAKS (Note: Not available with Option No. 2.15)
2.21	CARGO AREA FLOOR MAT, RUBBER
2.22	HEADACHE RACK SHALL BE PROVIDED TO PROTECT THE REARWINDOW AND SHALL BE CONSTRUCTED OF A MIN. 16 GAUGE STEEL FRAME AND A WINDOW COVERING OF HORIZONTAL LOUVERS, EVENLY SPACED AT APPROXIMATELY 2-INCH INTERVALS, ADEQUATELY BRACED WITH MINIMUM 2" x 5" GUSSETS TO ENSURE STABILITY AND STRENGTH. MOUNTING SHALL BE ACCOMPLISHED BY THE USE OF 3/8INCH BOLTS WITH NUTS AND FLAT WASHER AND SHALL BE MOUNTED IN SUCH A WAY AS TO FACILITATE CLEANING OF THE REAR WINDOW AND SO DESIGNED TO PROVIDE UNOBSTRUCTED VISIBILITY OF THE CENTER-MOUNTED, REAR WINDOW OF CAB-MOUNTED STOPLAMP. RACK SHALL BE TREATED IN A CHEMICAL BATH OR DIP OR SIMILARLY TREATED FOR RUST PREVENTION PRIOR TO THE APPLICATION OF THE FINAL COAT OF PAINT.
2.23	CRANE WITH PLANETARY GEAR WINCH, OSHA & ANSI APPROVED MOMENT RATING OF APPROXIMATELY 10,000 LB/FT. LIFT CAPACITY OF 3200 LBS. AT 3 FT. RADIUS. POWER ROTATION, ELEVATION AND EXTENSION REQUIRED. MINIMUM 3-3/8" I.D. TAPERED ROLLER BEARING WITH A BASE PLATE THAT IS 12” X 12” X 1” THICK MINIMUM. IN ACCORDANCE WITH ASME B30.5, MANUFACTURER SHALL PROVIDE SAE J1063 STRAIN GAUGE CERTIFICATION AND CRANE INSTALLER SHALL PROVIDE SAE J765 STABILITY CERTIFICATION. REFERENCED MANUFACTURERS: LIFTMOORE MODEL 3200 REE15, RKI 3200 ERX15 OR CITY APPROVED EQUAL. CRANE TO INCLUDE THE FOLLOWING 1) OUTRIGGER, MANUAL OUT CRANKDOWN, ASSEMBLY . 2) BOOM REST, LIFTMORE PART NO. 30679, OR CITY APPROVED EQUAL. 3) ANL 150 FUSS LINK BETWEEN 12 VOLT POWER SUPPLY AND CRANE HOT WIRE TO PROTECT TRUCK ELECTRICAL SYSTEM. 4) SUSPENSION LEAF OR LEAVES ADDED TO REAR TRUCK SPRING TO BRING TRUCK BACK TO LEVEL CONDITION (ON CRANE SIDE) TO SUPPORT EXTRA WEIGHT OF CRANE. 5) INTEGRAL LOAD SENSOR. 6) CRANE REINFORCEMENT FOR RIGHT COMPARTMENT.

SPECIFICATIONS FOR UTILITY SERVICE BODIES: (Continued)

OPTIONAL EQUIPMENT FOR UTILITY SERVICE BODIES: (Continued)

OPT. NO.	OPTION DESCRIPTION

2.24 CRANE WITH OSHA & ANSI APPROVED MOMENT RATING OF 6000 FT.-LB., LIFT CAPACITY OF 2000 LBS. @ 1.6FT RADIUS. MANUAL ROTATION, ELEVATION AND BOOM EXTENSION TO MINIMUM 7FT. 12V DC ELECTRIC WINCH MOTOR WITH MINIMUM 25FT OF AIRCRAFT–QUALITY CABLE AND MINIMUM 12FT PENDANT CONTROL.

REFERENCED MANUFACTURERS AND MODELS: LIFTMOORE MODEL 2000A
AUTOCRANE MODEL 2003
RKI MODEL 2000-3-7S

CRANE TO INCLUDE THE FOLLOWING:

1) JACK LEG ASSEMBLY OF SAME MANUFACTURE AS CRANE.
2) BOOM REST TO SUPPORT BOOM AND PREVENT ROTATION DURING TRANSPORT.
3) CRANE MANUFACTURE RECOMMENDED CIRCUIT BREAKER BETWEEN 12VOLT POWER SOURCE AND CRANE TO PROTECT TRUCK ELECTRICAL SYSTEM.
4) CRANE SHALL BE MOUNTED IN ACCORDANCE WITH THE CRANE MANUFACTURER'S WRITTEN INSTRUCTIONS. WHEN MOUNTED ON A UTILITY SERVICE BODY, THE SERVICE BODY MUST BE REINFORCED AS AN OEM UPGRADE BY THE ORIGINAL MANUFACTURE OF THE BODY. NO AFTERMARKET OR SHOP FABRICATED REINFORCEMENTS ARE ACCEPTABLE.
5) SUSPENSION LEAF OR LEAVES ADDED TO REAR TRUCK SPRING TO BRING TRUCK BACK TO LEVEL CONDITION (ON CRANE SIDE) TO SUPPORT EXTRA WEIGHT OF CRANE.

2.25 THREE DRAWER STORAGE MODULE, RAT PACK OR EQUAL

2.26 (STD.) CLEARANCE LIGHTS, 3-RED LIGHT CLUSTER INSTALLED ON REAR OF SERVICE BODY.

2.27 MUD FLAPS

2.28 LIFTGATE, 1300-LB CAPACITY, INCLUDING BODY MANUFACTURER'S STEP BUMPER:

SINGLE ELECTRIC/HYDRAULIC POWER UNIT WITH 2-PIECE FOLDING TREAD PLATE STEEL PLATFORM WITH MINIMUM 49" X 38" LOADABLE AREA PLUS 4" RAMP. GATE SHOULD HAVE A MINIMUM 40" DOWN TRAVEL. TOMMY GATE MODEL 54-1340 F11 TP OR CITY-APPROVED EQUAL.

A BODY MANUFACTURER'S STANDARD 6" TO 8" STRAIGHT, PLAIN TREADPLATE STEP BUMPER WITHOUT A HITCH PLATE SHALL BE INCLUDED. BUMPER MUST HAVE SLOTS CUT AND TRIMMED OUT TO ALLOW THE LIFTGATE ARMS TO TRAVEL DOWN THROUGH THE BUMPER.

IF A TOWING APPLICATION IS REQUIRED, TRUCK TOWING OPTION NOS. 213, 243 or 244 SHOULD BE REQUESTED FOR THE TRUCK BY CITY DEPARTMENTS.

(**NOTE**: **UTILITY SERVICE BODY TRUCK BUMPER OPTION NOS. 2.7, 2.8, 2.9 AND 2.10 CANNOT BE USED WITH THIS OPTION.)**

SPECIFICATIONS FOR STATIONARY PLATFORM/STAKE BODIES

1.0 CONSTRUCTION AND COMPONENT REQUIREMENTS:

1.1 Cross members: cross sill 12” centers

1.2 Longitudinal sills: Two long sills of 5", 6.7 lb/ft structural steel channel

1.3 Rails:

1.3.1 Floor edges shall be enclosed with rails installed on both ends and on both sides as follows: End-rails and side-rails shall be constructed of a minimum 5" structural steel channel.

1.4 Rub-rails:

1.4.1 1/4" X 21/2" steel welded to outside of stake pockets.

1.5 Stake pockets:

1.5.1 Shall be steel, four (4) pockets on rear rail and six (6) pockets on each side rail.
1.5.2 Between each pocket, a 1/4" X 2" steel plate shall be welded to the rub-rail and floor edge rail, top and bottom.

1.6 Cab protector:

1.6.1 The protector shall be designed to prevent shifting of load and penetrating or crushing of the drivers’ compartments.
1.6.2 The cab protector height shall be approximately 34".
1.6.3 The frame shall be constructed with 2" X 3" X 1/8" square tubing, two (2) up-rights of 2" X 3" X 1/8" and 11 gauge steel plate up to the bottom of the window with #9, 3/4 flat expanded metal to the top of the frame.

1.7 Cab protector mounting:

1.7.1 The protector shall be mounted using "knee-brace" style reinforcement welded to the bottom of the outer body rails and long sills.
1.7.2 Top mounted angle gusset type mount IS NOT ACCEPTABLE.

1.8 Flooring:

1.8.1 Wood floor shall be minimum 1-1/2" finished thickness, #1 pine PentaTreated lumber. Only tongue & groove will be ACCEPTABLE.
1.8.2 All wood flooring shall be secured with two (2) recessed screws or bolts at each cross member.

1.9 Mounting strips:

1.9.1 The CHASSIS frame shall be separated from each long sill by 0.75" PentaTreated lumber and shall be required along the entire length of the long sills.

1.10 Anti-slipping Braces:

1.10.1 Two steel angles of 2" X 2" X 0.125" shall be welded to each long sill at a location immediately forward of the first rear spring hanger at approximately 45 degrees from the vertical axis.
1.10.2 The steel angles shall be drilled and bolted to the CHASSIS frame with 0.5" bolts.

SPECIFICATIONS FOR STATIONARY PLATFORM/STAKE BODIES: Continued

2.0 LAMPS, REFLECTORS AND SIDE MARKER LAMPS:

2.1 Lamps, reflectors and side marker lamps shall be furnished as required by Federal standards.
Fully protected metal armored lights and reflectors shall be used.
All wiring shall be run in split flexible conduit.
2” red/silver reflective tape on rub rail sides and back.

3.0 PAINT AND SURFACE PREPARATION:

3.1 All surfaces of the body including all structural members shall be thoroughly prepared and cleaned.
The primer used shall be a rust inhibitive type and compatible with the topcoat that will be painted black.

4.0 MUD FLAPS:

4.1 Mud flaps shall be installed to meet Department of Public Safety requirements and be constructed in such a manner so as to prevent sailing and water splashing.

4.2 Hole on bottom center of each mud flap, to be used in conjunction with hook mounted to mud flap frame to hold mud flap up.

5.0 STATE INSPECTION:

5.1 The body supplier shall install a State Inspection sticker on the vehicle after body installation.

SPECIFICATIONS FOR STATIONARY PLATFORM/STAKE BODIES: (Continued)

OPTIONAL EQUIPMENT FOR STATIONARY PLATFORM/STAKE BODIES:

OPTION NO.	OPTION DESCRIPTION
1	STAKE RACK SECTIONS: Each stake rack section shall have horizontal slats having a maximum 7" gap between them. Each stake rack shall have hardware to lock each section to adjacent sections. The slats shall be constructed of 16 gauge corrugated steel with rounded corners and smooth edges. Each slat shall be secured to two (2) steel stakes. Minimum three (3) slats per section. Two (2) stake rack sections required on both sides and 2 at the rear approximately 34" in height. Each stake section shall have a locking mechanism on the lower slat between the stakes.
2	STEEL FLOORING: IN LIEU OF WOOD FLOORING: Steel flooring shall be 3/16" safety tread plate.
3	RHINO LININGS TUFF-STUFF OR CITY APPROVED EQUAL ANTISKID COATING ON STEEL FLOOR.
4	LIFT GATE: 48" maximum ground-to-bed travel. 34" X 82" Treadplate platform with fixed ramp lifting capacity 1200 lb. electric over hydraulic curbside operation. When lift gate option is used stake rack sections on rear shall not be required. Rhino linings tuff-stuff antiskid coating on platform loading area.
4.1	HYDRAULIC LIFT GATE: 32” minimum, 54” maximum ground-to-bed travel. 89” x 55” aluminum platform with 6” taper, 2000 lbs. lift capacity, electric over hydraulic curbside operation. When lift gate option is ordered, stake rack sections on rear are not required. Rhino linings tuff-stuff antiskid coating on platform loading area. Must be Tommy Gate Railgate Model 8920A. No substitutions.
4.2	LIFT GATE, FOLDAWAY: For combination dock and street loading/unloading. Has platform that folds and stows under the body for a dock-ready position. Platform pivots down to a ramp position for loading/unloading at ground level. In the rising operation, the platform pivots to level ride and remains level as it continues to the bed height. Minimum lift capacity of 2500 lbs. All aluminum folding platform, 60” x 80”. Dual platform torsion springs. Weight approximately 1115 lbs. Maxon Lift Corporation, Tuk-a-Way Series, Model GPT-25 or City-approved equal.
5	BUMPER: ICC BUMPER PER ATTACHED DRAWING “A” 2” ball with 1-3/8 bolt for max load of 5,000 lbs.
6	BUMPER: ICC BUMPER PER ATTACHED DRAWING “A” 25/16” ball with 1-3/8 bolt for max load of 5,000 lbs.
7	BUMPER: ICC BUMPER PER ATTACHED DRAWING “B” Includes Buyers Products No. PM87 Pintle Mount, No. BH82000 Combination Hitch with 2” Ball and No. HP6253WC Hitch Pin. Also includes two each of Buyers Products No. B40 Lashing Rings welded on top of bumper. No substitutions.
8	BUYERS PRODUCTS: NO. RB2516 replacement ball. **No substitutions**.

SPECIFICATIONS FOR STATIONARY PLATFORM/STAKE BODIES: (Continued)

OPTIONAL EQUIPMENT FOR STATIONARY PLATFORM/STAKE BODIES: (Continued)

OPTION NO.	OPTION DESCRIPTION
9	FOUR-WAY ELECTRICAL ROUND CONNECTOR: Mounted on rear bumper
10	SIX-WAY ELECTRICAL ROUND CONNECTOR: Mounted on rear bumper
11.	SEVEN-WAY ELECTRICAL ROUND CONNECTOR: Mounted on rear bumper
12.	UNDER BED BOXES, RKI, WEATHER GUARD, DUTEC OR APPROVED EQUAL, COLOR BLACK: 12.2 U24- 24” long, 18” depth, 18” height 12.3 U30- 30” long, 18” depth, 18” height 12.4 U36- 36” long, 18” depth, 18” height
13.	ALL UNDER SIDES SHALL BE UNDER COATED.
14.	RUMBER FLOORING: IN LIEU OF WOOD OR STEEL FLOORING Two” by six” (2” x 6”) center match to be installed laid flat with ends butted together and with no spacing between the material and the metal frame. All installation shall be in accordance with the manufacturer’s specifications.

SPECIFICATIONS FOR STATIONARY PLATFORM/STAKE BODIES: Continued

BUMPER DRAWINGS A AND B

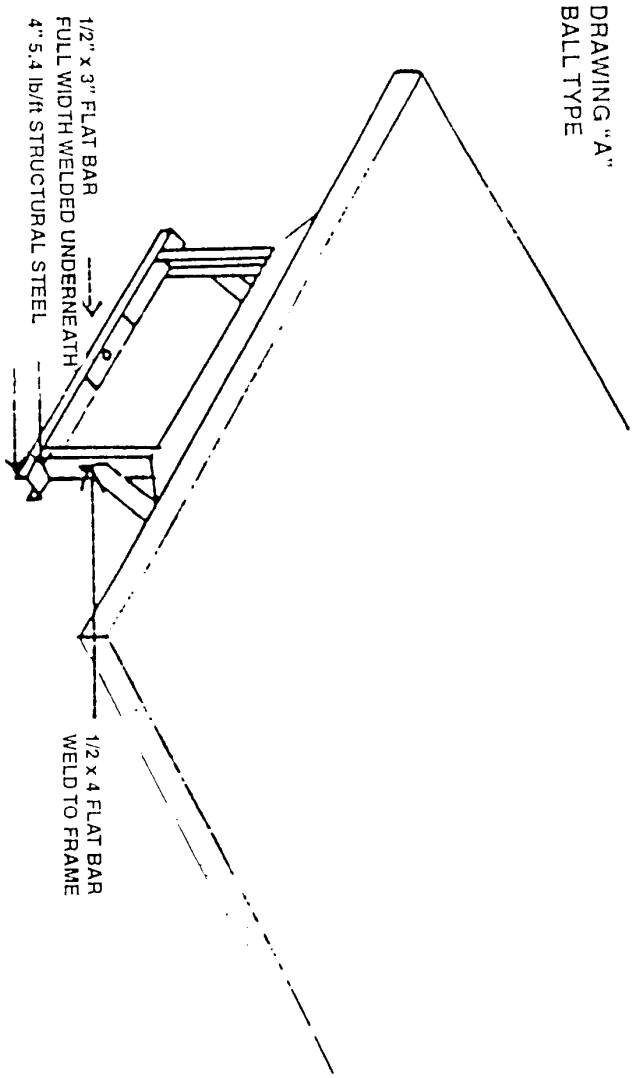

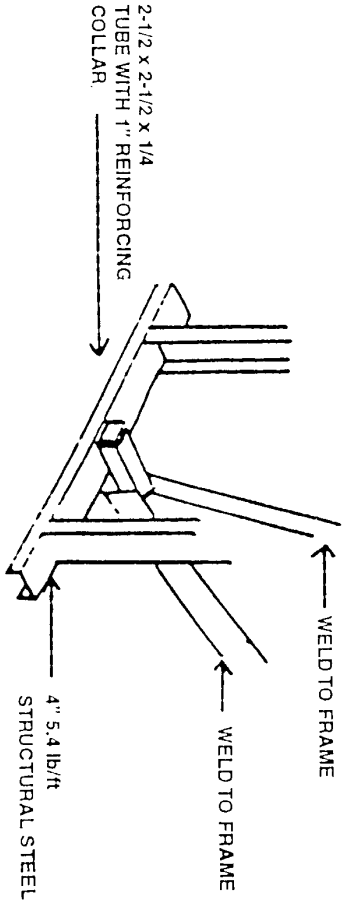

SPECIFICATIONS FOR DUMP TRUCK BODIES

TRUCK BODIES, DUMP 2/3 CUBIC YARDS, 8' OR 9' BED FOR 60" CA, – SERIES NO. 4000:

1.0 ALL DUMP BODIES WILL BE MADE WITH ASTM A607 GRADE 45 CLASS2 OR COMMERCIALLY EQUIVALENT STEEL; MINIMUM 45,000 PSI YIELD AND 55,000 PSI TENSILE

1.1 APPROVED BRANDS:
- 1.1.1 Heil SL Yard Bird body with 1416FLM hoist or city approved equal
- 1.1.2 Peabody Galion 100U body with UDE 411DA hoist
- 1.1.3 Omaha Standard Eagle 2/3 body with DL 424D hoist
- 1.1.4 Fontaine U250 body with U105519 hoist
- 1.1.5 Crysteel 2/3 body with RC420 hoist

1.2 SPECIFICATIONS:
- 1.2.1 2 cubic yard water level
- 1.2.2 3 cubic yard with side boards. Side boards will not be furnished
- 1.2.3 10 gauge floor
- 1.2.4 12 gauge sides
- 1.2.5 12 gauge head
- 1.2.6 12 gauge tailgate
- 1.2.7 OEM long members
- 1.2.8 OEM cross members, with gusset on every other cross member
- 1.2.9 12 gauge 1/4 cab protector, 12" minimum
  - 1.2.9.1 Cab protector shall have a 10" x 24" cut-out for rear viewing
  - 1.2.9.2 No. 9 raised expanded metal protective covering
- 1.2.10 Boxed vertical side braces
- 1.2.11 Boxed top rail
- 1.2.12 Rear corner post
- 1.2.13 OEM standard tailgate, double-acting
- 1.2.14 Tailgate chains and brackets
- 1.2.15 Upper and lower tailgate hinges, flame-cut steel
- 1.2.16 Upper and lower tailgate pins
- 1.2.17 OEM side board pockets
- 1.2.18 Sloped rub-rails
- 1.2.19 Sloped tailgate braces
- 1.2.20 2" radius for floor to sides
- 1.2.21 Ladder rack, curb side, DRAWING NO.1 (attached)
- 1.2.22 Shovel rack on right and left sides, made with 2" ID, 3" long pipe for long handled shovels
  - 1.2.22.1 Pipe to be welded to side of body at an angle so shovel will not fall out
- 1.2.23 8 foot or 9 foot bed
- 1.2.24 NETA class 20 hoist, electric/hydraulic
- 1.2.25 "Bed Up" light and "PTO Engaged" lights mounted on dash visible to driver
- 1.2.26 Certification of Painting
- 1.2.27 Paint:
  - 1.2.27.1 Primer: Sherwin Williams, Gray jet Seal or equal
  - 1.2.27.2 Undercoat
  - 1.2.27.3 Base Coat: Color (Acrylic enamel) to match cab
  - 1.2.27.4 Top Coat: Clear
- 1.2.28 Backup alarm Ecco #SA901 or Whelen WBUA112 with automatic adjustment for output, from 82 dba to 107 dba
- 1.2.29 Mud flaps, anti-sail heavy duty fiber, reinforced with metal mounting inserts
- 1.2.30 State Inspection and Weight Certificate

SPECIFICATIONS FOR DUMP TRUCK BODIES: (Continued)

OPTIONAL EQUIPMENT FOR DUMP BODIES, 2/3 CUBIC YARDS, 8' OR 9' BED FOR 60" CA

OPT. NO.	DESCRIPTION
1	OPT 1 HITCH, Holland Pintle Model PH-T-60-AOL-8 or City-approved equal reinforced to frame, capable of pulling maximum of 30,000 lbs.
3	OPT 3 "D" RINGS, Buyers Model #848 1" OD Bar Stock 3" x 3"ID oil field type folding mounted on rear bumper
4	OPT 4 CONNECTOR, 4-pole female flap to be mounted on rear bumper and connect to cable
5	OPT 5 CONNECTOR 6-way female flap to be provided and mounted on rear bumper and connect to cable
6	OPT 6 RELOCATION of air and electrical trailer connector to a protected location
7	OPT 7 STROBE LIGHT, Target Tech Model 851, amber, headache rack mounted, switch to be cab-mounted with indicator light
11	OPT 11 TARP, Donovan 5000GL, HD PVC coated mesh cover, Black Finish, Cab Level Manual Drive with No. 1647 Wind Deflector.
12	OPT 12 TARP, Donovan 5000SU, HD PVC coated mesh cover, Black Finish, Ground Level Manual Drive
13	OPT 13 TARP, Donovan 2000SR Pull Style with housing, Spring Return Roller Bar and HD PVC coated mesh cover. Supplier shall furnish Side Boards with this option
14	OPT 14 BEDLINER, Quicksilver Tivar-Uhmw Poly or equal, 1/2" thick polymer material, mounted on bulkhead sidewalls and floor. Sections shall be connected with fasteners for lining replacement. Supplier shall provide a minimum 12-month warranty
17	OPT 17 SIGNBOARD, Arrow Wanco Model No. 25SAC, vehicle mounted 25 lights, 36" x 72" panel size, with mounted electric actuator lift
18	OPT 18 TRAILER TOWING PACKAGE, including seven-way electrical cable
19	OPT 19 SPREADER WITH DOUBLE AUGER, MONROE Model MS964DA or City-approved equal, rear mounted PTO activated tailgate spreader
20	OPT 20 PAINT, base coat shall be IMRON, color to match cab
21	OPT 21 HITCHES, Holland Pintle Model Ph-16-B Combination Pintle Hook and 2" Ball Hitch

SPECIFICATIONS FOR DUMP TRUCK BODIES (CONTINUED):

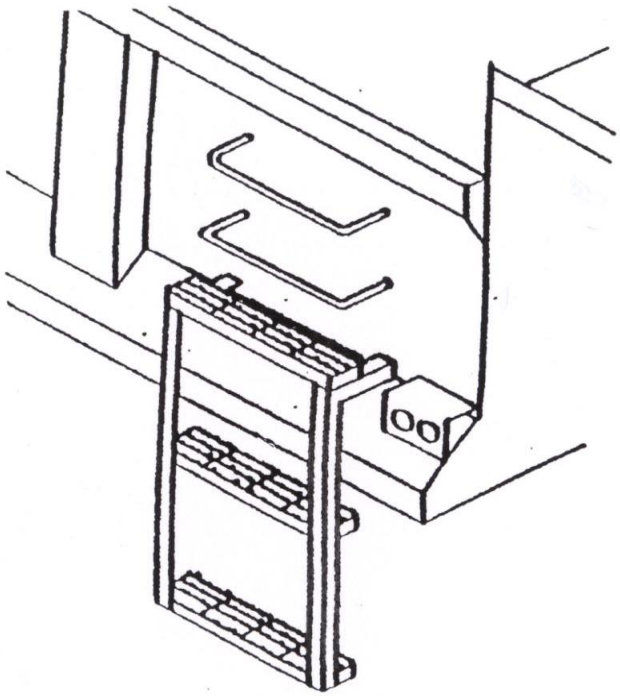

TWO GRAB HANDLES
EACH ¾" RE-BAR
STEPS FABRICATED OF
1-1/2" X 1-1/2" X 1/4"
ANGLE IRON
SERRATED BAR GRATING
WITH EDGES.
STEPS TO BE
APPROXIMATELY 2-1/2"
TO 3-1/2" DEEP

APPROXIMATELY 17" WIDE OD
FIRST STEP APPROXIMATELY
24" FROM GROUND

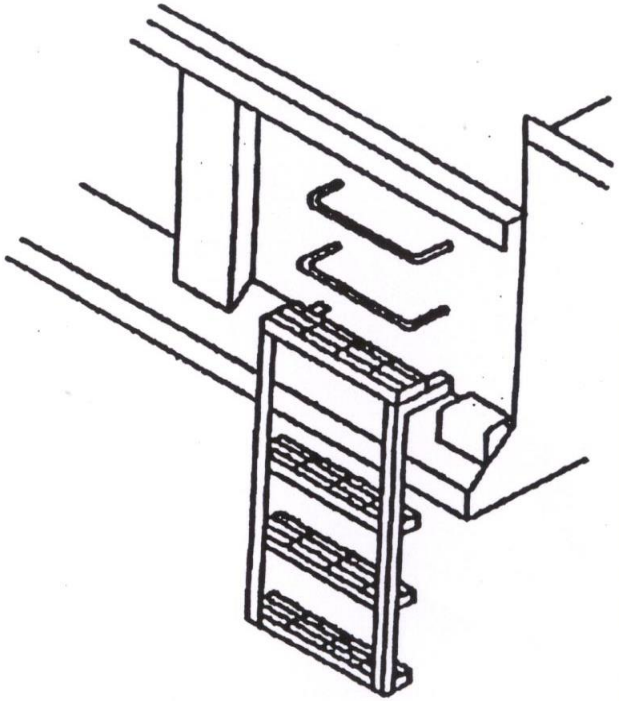

DRAWING #1
THREE STEP
FOR 2 TO 3 YD AND 5 TO 6 YD
CURBSIDE

DRAWING #2
FOUR STEP
FOR 10 TO 12 YD
CURBSIDE

3,0 **PRICE ADJUSTMENTS:**

3.1 No cost increases shall be allowed during the first two years (vehicle model years 2015 and 2016) of the contract. Pricing shall be fixed for the first two years (vehicle model years 2015 and 2016).

3.2 The dealer's invoice that the contractor provided with its bid indicating current manufacture pricing for vehicle model year 2015 and 2016 shall be used to determine the "manufacture cost increase" for the third and fourth contract option years.

3.3 The Contractor shall be allowed to increase unit costs up to the new manufacture's invoice cost by supplying the City's Strategic Procurement Division with a current manufacture's invoice to determine the difference between the original manufactures invoice provided to the City at time of original bid submission, and the current manufacture's cost at the start of the third and fourth year option. The difference between the two manufacture's invoices shall be the allowable cost increase per vehicle model.

4.0 SHIPPING TERMS:

Prices shall be prepaid F.O.B. destination to the delivery locations, Houston, TX, as indicated on individual City of Houston purchase orders. Contractor/Supplier shall retain title and control of all goods until they are delivered and the contract of coverage (Purchase Order) has been completed. All risk of transportation and all related charges shall be the responsibility of the Contractor/Supplier. All claims for visible or concealed damage shall be filed by the Contractor/Supplier. The City will notify the Contractor/Supplier promptly of any damaged goods and shall assist the Contractor/Supplier in arranging for inspection.

5.0 SILENCE OF SPECIFICATIONS:

The apparent silence of these specifications as to any detail or the apparent omission from them of a detailed description concerning any point shall be regarded as meaning that only the best commercial practice shall prevail and only materials and workmanship of first quality are acceptable. All interpretations of these specifications shall be made upon the basis of this statement.

6.0 SPECIFIED EQUIPMENT, OR EQUIVALENT:

6.1 Wherever in the specifications any materials or processes are indicated or specified by patent of proprietary name and/or by name of manufacturer, such specifications shall be deemed to be used for the purpose of facilitating descriptions of the performance, materials and/or processes desired and shall be deemed to be followed by the words, "or equivalent", if not so stated in the specifications herein.

6.2 The burden of proof shall rest with the bidder, in the course of a technical evaluation, to prove that the **DETERMINATION AS TO WHETHER THE ITEM(S) BID IS(ARE) EQUIVALENT TO THOSE SPECIFIED SHALL REST SOLELY WITH THE CITY PURCHASING AGENT AND THE RECEIVING DEPARTMENT.**

7.0 BRAND NAMES:

Any manufacturer's names, trade names, brand names, or catalog numbers used in the specifications are for the purpose of describing and establishing the general quality level, design and performance desired. Such references are not intended to limit or restrict bidding by other Contractor/Suppliers, but are intended to approximate the quality design or performance that is desired. Any bid that proposes like quality, design or performance, will be considered. Equivalent products will be considered, provided a complete description and product literature is provided. Unless a specific substitution is made, the assumption will be that the item bid is exactly as specified on the Invitation to Bid.

SECTION C
GENERAL TERMS & CONDITIONS

THE STATE OF TEXAS **BID # S38-N25104**

ORDINANCE #_____

COUNTY OF HARRIS **CONTRACT #_____**

I. PARTIES

1.0 ADDRESS:

THIS AGREEMENT FOR_____("Agreement") is made on the Countersignature Date between the **CITY OF HOUSTON, TEXAS** ("City"), a Texas Home-Rule City and **CONTRACTOR NAME** ("Contractor or Vendor"), a corporation doing business in Texas.

The initial addresses of the parties, which one party may change by giving written notice to the other party, are as follows:

City	**Contractor**
City Purchasing Agent for Director(s)	_____
of Various Department(s)	_____
City of Houston	_____
P.O. Box 1562	Phone: _____
Houston, Texas 77251	Fax: _____

The Parties agree as follows:

2.0 TABLE OF CONTENTS:

2.1 This Agreement consists of the following sections:

TABLE OF CONTENTS

Page No.

I. PARTIES 223

1.0 ADDRESS: 223
2.0 TABLE OF CONTENTS: 223
3.0 PARTS INCORPORATED: 225
4.0 CONTROLLING PARTS: 225
5.0 DEFINITIONS: 225
6.0 SIGNATURES: 226

II. DUTIES OF CONTRACTOR 227

1.0 SCOPE OF SERVICES: 227
2.0 INDEMNITY AND RELEASE: 227
3.0 INDEMNIFICATION PROCEDURES: 228
4.0 INSURANCE: 229
5.0 WARRANTIES: 229
6.0 LICENSES AND PERMITS: 230
7.0 COMPLIANCE WITH EQUAL OPPORTUNITY ORDINANCE: 230
8.0 MWBE COMPLIANCE: 230
9.0 DRUG ABUSE DETECTION AND DETERRENCE: 230
10.0 ENVIRONMENTAL LAWS: 231
11.0 CONTRACTOR'S PERFORMANCE: 9
12.0 PAYMENT OF EMPLOYEES AND SUBCONTRACTORS: 231
13.0 CONTRACTOR PAY OR PLAY PROGRAM 9

III. DUTIES OF CITY 232

1.0 PAYMENT TERMS: 232
2.0 TAXES: 232
3.0 METHOD OF PAYMENT: 232
4.0 METHOD OF PAYMENT - DISPUTED PAYMENTS: 232
5.0 LIMIT OF APPROPRIATION: 233
6.0 CHANGES: 233

IV. TERM AND TERMINATION 234

1.0 CONTRACT TERM: 234
2.0 NOTICE TO PROCEED: 234
3.0 RENEWALS: 234
4.0 TIME EXTENSIONS: 234
5.0 TERMINATION FOR CONVENIENCE BY THE CITY: 235
6.0 TERMINATION FOR CAUSE BY CITY: 235
7.0 TERMINATION FOR CAUSE BY CONTRACTOR: 236
8.0 REMOVAL OF CONTRACTOR OWNED EQUIPMENT AND MATERIALS: 236

V. MISCELLANEOUS 237

1.0 INDEPENDENT CONTRACTOR: 237
2.0 FORCE MAJEURE: 237
3.0 SEVERABILITY: 237
4.0 ENTIRE AGREEMENT: 237
5.0 WRITTEN AMENDMENT: 237
6.0 APPLICABLE LAWS: 237
7.0 NOTICES: 238
8.0 NON-WAIVER: 238

9.0 INSPECTIONS AND AUDITS: 238
10.0 ENFORCEMENT: 238
11.0 AMBIGUITIES: 238
12.0 SURVIVAL: 238
13.0 PARTIES IN INTEREST: 238
14.0 SUCCESSORS AND ASSIGNS: 238
15.0 BUSINESS STRUCTURE AND ASSIGNMENTS: 239
16.0 REMEDIES CUMULATIVE: 239
17.0 CONTRACTOR DEBT: 239

EXHIBITS

A. DEFINITIONS
B. SPECIFICATIONS/SCOPE OF SERVICES

C. EQUAL EMPLOYMENT OPPORTUNITY
D. MWBE SUBCONTRACT TERMS
E. DRUG POLICY COMPLIANCE AGREEMENT
F. CERTIFICATION OF NO SAFETY IMPACT POSITIONS
G. DRUG POLICY COMPLIANCE DECLARATION
H. FEES AND COSTS
I. CONTRACTOR PAY OR PLAY

3.0 PARTS INCORPORATED:

3.1 The above described sections and exhibits are incorporated into this Agreement.

4.0 CONTROLLING PARTS:

4.1 If a conflict among the sections or exhibits arises the Exhibits control over the Sections.

5.0 DEFINITIONS:

5.1 Certain terms used in this Agreement are defined in Exhibit "A".

6.0 SIGNATURES:

6.1 The Parties have executed this Agreement in multiple copies, each of which is an original.

ATTEST/SEAL (if a corporation):

WITNESS (if not a corporation):

By:_____

Name:

Title:

CONTRACTOR NAME OF COMPANY

By:_____

Name:

Title:

Federal Tax ID Number: _____

ATTEST/SEAL:

_____
City Secretary

CITY OF HOUSTON, TEXAS
Signed by:

_____
Mayor

APPROVED:

_____
City Purchasing Agent

COUNTERSIGNED BY:

_____
City Controller

DATE COUNTERSIGNED:

_____

This Contract has been reviewed as to form by the undersigned legal assistant and has been found to meet established Legal Department criteria. The Legal Department has not reviewed the content of these documents.

_____
Date

_____
Legal Assistant

II. DUTIES OF CONTRACTOR

1.0 SCOPE OF SERVICES:

1.1 In consideration of the payments specified in this Agreement, Contractor shall provide all labor, material, equipment, transportation and supervision necessary to furnish and deliver **Automobiles, Vans, Utility Vehicles and Light Duty Trucks in accordance with the specifications described in Exhibit "B"."**

2.0 INDEMNITY AND RELEASE:

2.1 RELEASE

PRIME CONTRACTOR/SUPPLIER AGREES TO AND SHALL RELEASE THE CITY, ITS AGENTS, EMPLOYEES, OFFICERS, AND LEGAL REPRESENTATIVES (COLLECTIVELY THE CITY) FROM ALL LIABILITY FOR INJURY, DEATH, DAMAGE, OR LOSS TO PERSONS OR PROPERTY SUSTAINED IN CONNECTION WITH OR INCIDENTAL TO PERFORMANCE UNDER THIS AGREEMENT, EVEN IF THE INJURY, DEATH, DAMAGE, OR LOSS IS CAUSED BY THE CITY'S SOLE OR CONCURRENT NEGLIGENCE AND/OR THE CITY'S STRICT PRODUCTS LIABILITY OR STRICT STATUTORY LIABILITY.

2.2 INDEMNIFICATION:

PRIME CONTRACTOR/SUPPLIER AGREES TO AND SHALL DEFEND, INDEMNIFY, AND HOLD THE CITY, ITS AGENTS, EMPLOYEES, OFFICERS, AND LEGAL REPRESENTATIVES (COLLECTIVELY "THE CITY") HARMLESS FOR ALL CLAIMS, CAUSES OF ACTION, LIABILITIES, FINES, AND EXPENSES (INCLUDING, WITHOUT LIMITATION, ATTORNEY'S FEES, COURT COSTS, AND ALL OTHER DEFENSE COSTS AND INTEREST) FOR INJURY, DEATH, DAMAGE, OR LOSS TO PERSONS OR PROPERTY SUSTAINED IN CONNECTION WITH OR INCIDENTAL TO PERFORMANCE UNDER THIS AGREEMENT INCLUDING, WITHOUT LIMITATION, THOSE CAUSED BY:

2.2.1 PRIME CONTRACTOR/SUPPLIERS AND/OR ITS AGENTS', EMPLOYEES', OFFICERS', DIRECTORS', CONTRACTORS', OR SUBCONTRACTORS' (COLLECTIVELY IN NUMBERED PARAGRAPHS 2.1-2.3, "PRIME CONTRACTOR/SUPPLIER") ACTUAL OR ALLEGED NEGLIGENCE OR INTENTIONAL ACTS OR OMISSIONS;

2.2.2 THE CITY'S AND PRIME CONTRACTOR/SUPPLIER'S ACTUAL OR ALLEGED CONCURRENT NEGLIGENCE, WHETHER PRIME CONTRACTOR/SUPPLIER IS IMMUNE FROM LIABILITY OR NOT; AND

2.2.3 THE CITY'S AND PRIME CONTRACTOR/SUPPLIER'S ACTUAL OR ALLEGED STRICT PRODUCTS LIABILITY OR STRICT STATUTORY LIABILITY, WHETHER PRIME CONTRACTOR/SUPPLIER IS IMMUNE FROM LIABILITY OR NOT.

2.2.4 PRIME CONTRACTOR/SUPPLIER SHALL DEFEND, INDEMNIFY, AND HOLD THE CITY HARMLESS DURING THE TERM OF THIS AGREEMENT AND FOR FOUR YEARS AFTER THE AGREEMENT TERMINATES. PRIME CONTRACTOR/SUPPLIER'S INDEMNIFICATION IS LIMITED TO $500,000.00 PER OCCURRENCE. PRIME CONTRACTOR/SUPPLIER SHALL NOT INDEMNIFY THE CITY FOR THE CITY'S SOLE NEGLIGENCE.

2.3 INDEMNIFICATION:

CONTRACTOR SHALL REQUIRE ALL OF ITS SUBCONTRACTORS (AND THEIR SUBCONTRACTORS) TO RELEASE AND INDEMNIFY THE CITY TO THE SAME EXTENT AND IN SUBSTANTIALLY THE SAME FORM AS ITS RELEASE AND INDEMNITY TO THE CITY.

3.0 INDEMNIFICATION PROCEDURES:

3.1 Notice of Claims. If the City or Prime Contractor/Supplier receives notice of any claim or circumstances which could give rise to an indemnified loss, the receiving party shall give written notice to the other party within 10 days. The notice must include the following:

3.1.1 a description of the indemnification event in reasonable detail,

3.1.2 the basis on which indemnification may be due, and

3.1.3 the anticipated amount of the indemnified loss.

3.2 This notice does not stop or prevent the City from later asserting a different basis for indemnification or a different amount of indemnified loss than that indicated in the initial notice. If the City does not provide this notice within the 10 day period, it does not waive any right to indemnification except to the extent that Prime Contractor/Supplier is prejudiced, suffers loss, or incurs expense because of the delay.

3.3 Defense of Claims

3.3.1 Assumption of Defense. Prime Contractor/Supplier may assume the defense of the claim at its own expense with counsel chosen by it that is reasonably satisfactory to the City. Prime Contractor/Supplier shall then control the defense and any negotiations to settle the claim. Within 10 days after receiving written notice of the indemnification request, Prime Contractor/Supplier must advise the City as to whether or not it will defend the claim. If Prime Contractor/Supplier does not assume the defense, the City shall assume and control the defense, and all defense expenses constitute an indemnification loss.

3.3.2 Continued Participation. If Prime Contractor/Supplier elects to defend the claim, the City may retain separate counsel to participate in (but not control) the defense and to participate in (but not control) any settlement negotiations. Prime Contractor/Supplier may settle the claim without the consent or agreement of the City, unless it (i) would result in injunctive relief or other equitable remedies or otherwise require the City to comply with restrictions or limitations that adversely affect the City, (ii) would require the City to pay amounts that Prime Contractor/Supplier does not fund in full, (iii) would not result in the City's full and complete release from all liability to the plaintiffs or claimants who are parties to or otherwise bound by the settlement.

4.0 INSURANCE:

4.1 Contractor shall maintain in effect certain insurance coverage and shall furnish certificates of insurance, in duplicate form, before beginning its performance under this Agreement. All policies except Professional Liability and Workers' Compensation must name the City as an additional insured. The issuer of any policy (1) shall have a Certificate of Authority to transact insurance business in Texas or (2) shall be an eligible non-admitted insurer in the State of Texas and have a Best's rating of at least B+ and a Best's Financial Size Category of Class VI or better, according to the most current edition Best's Key Rating Guide. Contractor shall maintain the following insurance coverages in the following amounts:

4.1.1 Commercial General Liability insurance including Contractual Liability insurance:
$500,000 per occurrence; $1,000,000 aggregate

4.1.2 Workers' Compensation including Broad Form All States endorsement:
Statutory amount

4.1.3 Automobile Liability insurance
$1,000,000 combined single limit per occurrence
Defense costs are excluded from the face amount of the policy.
Aggregate Limits are per 12-month policy period unless otherwise indicated.

4.1.4 Employer's Liability
Bodily injury by accident $100,000 (each accident)
Bodily injury by disease $100,000 (policy limit)
Bodily injury by disease $100,000 (each employee)

4.2 All insurance policies must require by endorsement, that the insurance carrier waives any rights of subrogation against the City, Contractor shall give written notice to the Director if any of its insurance policies are cancelled, materially changed or non-renewed. Within the 30 day period, Contractor shall provide other suitable policies in lieu of those about to be canceled, materially changed, or non-renewed so as to maintain in effect the required coverage. If Contractor does not comply with this requirement, the Director, at his or sole discretion, may:

4.2.1 immediately suspend Contractor from any further performance under this Agreement and begin procedures to terminate for default, or

4.2.2 purchase the required insurance with City funds and deduct the cost of the premiums from amounts due to Contractor under this Agreement.

4.2.3 All certificates of insurance submitted by Contractor shall be accompanied by endorsements for additional insured coverage in favor of the City for Commercial General Liability and Automobile Liability policies; and waivers of subrogation in favor of the City for Commercial General Liability, Automobile Liability, and Worker's Compensation/Employers' Liability policies. For a list of pre-approved endorsement, forms see **http://purchasing.houstontx.gov/forms.shtml.** The Director will consider all other forms on a case-by-case basis.

5.0 WARRANTIES:

5.1 Contractor represents and warrants that it shall perform all work in a good and workmanlike manner, meeting the standards of quality prevailing in Harris County, Texas for work of this kind. Contractor shall perform all work using trained and skilled persons having substantial experience performing the work required under this Agreement.

5.2 With respect to any parts and goods furnished by it, Contractor warrants:
5.2.1 that all items are free of defects in title, material, and workmanship,

5.2.2 that each item meets or exceeds the manufacturer's specifications and requirements for the equipment, structure, or other improvement in which the item is installed,

5.2.3 that each replacement item is new in accordance with original equipment manufacturer's specifications, and of a quality at least as good as the quality of the item which it replaces (when the replaced item was new), and

5.2.4 that no item or its use infringes any patent, copyright, or proprietary right.

6.0 LICENSES AND PERMITS:

6.1 Contractor shall obtain and pay for all licenses, permits, and certificates required by any statute, ordinance, rule, or regulation.

7.0 COMPLIANCE WITH EQUAL OPPORTUNITY ORDINANCE:

7.1 Contractor shall comply with the City's Equal Employment Opportunity Ordinance as set out in Exhibit "C."

8.0 MWBE COMPLIANCE:

8.1 Contractor shall comply with the City's Minority and Women Business Enterprise ("MWBE") programs as set out in Chapter 15, Article V of the City of Houston Code of Ordinances. Contractor shall make good faith efforts to award subcontracts or supply agreements in at least ____% of the value of this Agreement to MWBEs. Contractor acknowledges that it has reviewed the requirements for good faith efforts on file with the City's Office of Business Opportunity ("OBO"), and will comply with them.

8.2 M/WBE subcontracts must contain the Terms set out in Exhibit D.

9.0 DRUG ABUSE DETECTION AND DETERRENCE:

9.1 It is the policy of the City to achieve a drug-free workforce and workplace. The manufacture, distribution, dispensation, possession, sale, or use of illegal drugs or alcohol by contractors while on City Premises is prohibited. Contractor shall comply with all the requirements and procedures set forth in the Mayor's Drug Abuse Detection and Deterrence Procedures for Contractors, Executive Order No. 1-31 ("Executive Order"), which is incorporated into this Agreement and is on file in the City Secretary's Office.

9.2 Before the City signs this Agreement, Contractor shall file with the Contract Compliance Officer for Drug Testing ("CCODT"):

9.2.1 a copy of its drug-free workplace policy,

9.2.2 the Drug Policy Compliance Agreement substantially in the form set forth in Exhibit "E," together with a written designation of all safety impact positions and,

9.2.3 if applicable (e.g. no safety impact positions), the Certification of No Safety Impact Positions, substantially in the form set forth in Exhibit "F."

9.3 If Contractor files a written designation of safety impact positions with its Drug Policy Compliance Agreement, it also shall file every 6 months during the performance of this Agreement or on completion of this Agreement if performance is less than 6 months, a Drug Policy Compliance Declaration in a form substantially similar to Exhibit "G." Contractor shall submit the Drug Policy Compliance Declaration to the CCODT within 30 days of the expiration of each 6-month period of performance and within 30 days of completion of this Agreement. The first 6-month period begins to run on the date the City issues its Notice to Proceed or if no Notice to Proceed is issued, on the first day Contractor begins work under this Agreement.

9.4 Contractor also shall file updated designations of safety impact positions with the CCODT if additional safety impact positions are added to Contractor's employee work force.

9.5 Contractor shall require that its subcontractors comply with the Executive Order, and Contractor shall secure and maintain the required documents for City inspection.

10.0 ENVIRONMENTAL LAWS:

10.1 Contractor shall comply with all rules, regulations, statutes, or orders of the Environmental Protection Agency ("EPA"), the Texas Commission on Environmental Quality ("TCEQ"), and any other governmental agency with the authority to promulgate environmental rules and regulations ("Environmental Laws"). Contractor shall promptly reimburse the City for any fines or penalties levied against the City because of Contractor's failure to comply.

10.2 Contractor shall not possess, use, generate, release, discharge, store, dispose of, or transport any Hazardous Materials on, under, in, above, to, or from the site except in strict compliance with the Environmental Regulations. "Hazardous Materials" means any substances, materials, or wastes that are or become regulated as hazardous or toxic substances under any applicable federal, state, or local laws, regulations, ordinances, or orders. Contractor shall not deposit oil, gasoline, grease, lubricants or any ignitable or hazardous liquids, materials, or substances in the City's storm sewer system or sanitary sewer system or elsewhere on City Property in violation of the Environmental Laws.

11.0 CONTRACTOR'S PERFORMANCE:

11.1 Contractor shall make citizen satisfaction a priority in providing services under this Agreement. Contractor shall train its employees to be customer service-oriented and to positively and politely interact with citizens when performing contract services. Contractor's employees shall be clean, courteous, efficient, and neat in appearance and committed to offering the highest quality of service to the public. If, in the Director's opinion, Contractor is not interacting in a positive and polite manner with citizens, he or she shall direct Contractor to take all remedial steps to conform to these standards.

12.0 PAYMENT OF EMPLOYEES AND SUBCONTRACTORS:

12.1 Contractor shall make timely payments in accordance with applicable state and federal law to all persons and entities supplying labor, materials or equipment for the performance of this Agreement including Contractor's employees.

12.2 Failure of Contractor to pay it's employees as required by law shall constitute a default under this contract for which the Contractor and it's surety shall be liable on Contractor's performance bond if Contractor fails to cure the default as provided under this Agreement.

12.3 Contractor shall defend and indemnify the City from any claims or liability arising out of Contractors failure to pay its subcontractors as required by law. Contractor shall submit disputes relating to payment of M/WBE subcontractors to arbitration in the same manner as any other disputes under the M/WBE subcontract.

13.0 CONTRACTOR PAY OR PLAY PROGRAM:

13.1 The requirement and terms of the City of Houston Pay or Play Policy, as set out in Executive Order 1-7, are incorporated into this Agreement for all purposes. Contractor has reviewed Executive Order 1-7 and shall comply with its terms and conditions as they are set out at the time of City Council approval of this Agreement. Exhibit "I".

13.2 The Pay or Play Program for various departments will be administered by the City of Houston Affirmative Action Division's designee and for a Department specific contract; the Department's designated contract administrator will administer the Pay or Play Program.

III. DUTIES OF CITY

1.0 PAYMENT TERMS:

1.1 The City shall pay and Contractor shall accept fees at the unit prices provided in Exhibit H for all services rendered and the Deliverables furnished by Contractor. The fees must only be paid from Allocated Funds, as provided below.

1.2 Any quantities of services or Deliverables shown in any part of this contract or its exhibits are estimated only and are not any guarantee that the City will not purchase more or less of those services or Deliverables. The City will pay only for the services or Deliverables actually ordered and only at the unit prices set out.

1.3 The City of Houston's standard payment term is to pay 30 days after receipt of invoice or of goods or services, whichever is later, according to the requirements of the Texas Prompt Payment Act (Tx. Gov't Code, Ch. 2251). However, the City will pay in less than 30 days in return for an early payment discount from vendor as follows:

- Payment Time - 10 Days: 2% Discount
- Payment Time - 20 Days: 1% Discount

1.4 If the City fails to make a payment according to the early payment schedule above, but does make the payment within the time specified by the Prompt Payment Act, the City shall not receive the discount, but shall pay no other penalty. When the payment date falls on a Saturday, Sunday, or official holiday when City offices are closed and City business is not expected to be conducted, payment may be made on the following business day.

2.0 TAXES:

2.1 The City is exempt from payment of Federal Excise and Transportation Tax and Texas Limited Sales and Use Tax. Contractor's invoices to the City must not contain assessments of any of these taxes. The Director will furnish the City's exemption certificate and federal tax identification number to Contractor if requested.

3.0 METHOD OF PAYMENT:

3.1 The City shall pay Contractor on the basis of invoices submitted by Contractor and approved by the Director, showing the specific tasks completed in the preceding month and the corresponding prices. The City shall make payments to Contractor at its address for notices within 30 days of receipt of an approved invoice.

4.0 METHOD OF PAYMENT - DISPUTED PAYMENTS:

4.1 If the City disputes any items in an invoice Contractor submits for any reason, including lack of supporting documentation, the Director shall temporarily delete the disputed item and pay the remainder of the invoice. The Director shall promptly notify Contractor of the dispute and request remedial action. After the dispute is settled, Contractor shall include the disputed amount on a subsequent regularly scheduled invoice or on a special invoice for the disputed item only.

5.0 LIMIT OF APPROPRIATION:

5.1 The City's duty to pay money to Contractor under this Agreement is limited in its entirety by the provisions of this Section.

5.2 In order to comply with Article II, Sections 19 and 19a of the City's Charter and Article XI, Section 5 of the Texas Constitution, the City has appropriated and allocated the sum of
$_____to pay money due under this Agreement (the "Original Allocation").

5.3 The City shall only be obligated to pay money under this Agreement when it issues a City Purchase Order to Contractor. Contractor shall not provide any goods or services to the City under this Agreement until it receives a Purchase Order for such goods or services, and City shall have no obligation to pay Contractor for any item or service it furnishes without first receiving a City Purchase order for same. The only exception to the policy stated before is that the City may pay Contractor with a City-authorized Procurement Card ("P-card"), which shall not require the prior issuance of a Purchase order. Contractor shall not proceed to furnish goods or services until it has verified that a P-card payment will be made.

6.0 CHANGES:

6.1 At any time during the Agreement Term, the City Purchasing Agent or Director may issue a Change Order to increase or decrease the scope of services or change plans and specifications, as he or she may find necessary to accomplish the general purposes of this Agreement. Contractor shall furnish the services or deliverables in the Change Order in accordance with the requirements of this Agreement plus any special provisions, specifications, or special instructions issued to execute the extra work.

6.2 The City Purchasing Agent or Director will issue the Change Order in substantially the following form:

CHANGE ORDER

TO:	[Name of Contractor]
FROM:	City of Houston, Texas (the "City")
DATE:	[Date of Notice]
SUBJECT:	Change Order under the Agreement between the City and [Name of Contractor] countersigned by the City Controller on [Date of countersignature of the Agreement]

Subject to all terms and conditions of the Agreement, the City requests that Contractor provide the following:

[Here describe the additions to or changes to the equipment or services and the Change Order Charges applicable to each.]

Signed:
[Signature of City Purchasing Agent or Director]

6.3 The City Purchasing Agent or Director may issue more than one Change Order, subject to the following limitations:

6.3.1 Council expressly authorizes the City Purchasing Agent or Director to approve a Change Order of up to $50,000. A Change Order of more than $50,000 over the approved contract amount must be approved by the City Council.

6.3.2 If a Change Order describes items that Contractor is otherwise required to provide under this Agreement, the City is not obligated to pay any additional money to Contractor.

6.3.3 The Total of all Change Orders issued under this section may not increase the Original Agreement amount by more than 25%.

6.4 Whenever Contractor receives a Change Order, Contractor shall furnish all material, equipment, and personnel necessary to perform the work described in the Change Order. Contractor shall complete the work within the time prescribed. If no time for completion is prescribed, Contractor shall complete the work within a reasonable time. If the work described in any Change Order causes an unavoidable delay in any other work Contractor is required to perform under this Agreement, Contractor may request a time extension for the completion of the work. The City Purchasing Agent's or Director's decision regarding a time extension is final.

6.5 A product or service provided under a Change Order is subject to inspection, acceptance, or rejection in the same manner as the work described in the Original Agreement, and is subject to the terms and conditions of the Original Agreement as if it had originally been a part of the Agreement.

6.6 Change Orders are subject to the Allocated Funds provisions of this Agreement.

IV. TERM AND TERMINATION

1.0 CONTRACT TERM:

1.1 This Agreement is effective on the Countersignature Date and expires three (3) years after the date specified in the Notice to Proceed unless sooner terminated according to the terms of this Agreement.

2.0 NOTICE TO PROCEED:

2.1 Contractor shall begin performance under this Agreement on the date specified in a Notice to Proceed from the City Purchasing Agent.

3.0 RENEWALS:

3.1 Upon expiration of the Initial Term, and so long as the City makes sufficient supplemental allocations, this Agreement will be automatically renewed for two successive one-year terms on the same terms and conditions. If the Director of the City Department elects not to renew this Agreement, the City Purchasing shall notify Contractor in writing of non-renewal at least 30 days before the expiration of the then-current term.

4.0 TIME EXTENSIONS:

4.1 If the Department requests an extension of time to complete its performance, then the City Purchasing Agent may, in his or her sole discretion, extend the time so long as the extension does not exceed 180 days. The extension must be in writing but does not require amendment of this Agreement. Contractor is not entitled to damages for delay(s) regardless of the cause of the delay(s).

5.0 TERMINATION FOR CONVENIENCE BY THE CITY:

5.1 The City Purchasing Agent or Director may terminate this Agreement at any time by giving 30 days written notice to Contractor. The City's right to terminate this Agreement for convenience is cumulative of all rights and remedies which exist now or in the future.

5.2 On receiving the notice, Contractor shall, unless the notice directs otherwise, immediately discontinue all services under this Agreement and cancel all existing orders and subcontracts that are chargeable to this Agreement. As soon as practicable after receiving the termination notice, Contractor shall submit an invoice showing in detail the services performed under this Agreement up to the termination date. The City shall then pay the fees to Contractor for services actually performed, but not already paid for, in the same manner as prescribed in Section III unless the fees exceed the allocated funds remaining under this Agreement.

5.3 TERMINATION OF THIS AGREEMENT AND RECEIPT OF PAYMENT FOR SERVICES RENDERED ARE CONTRACTOR'S ONLY REMEDIES FOR THE CITY'S TERMINATION FOR CONVENIENCE, WHICH DOES NOT CONSTITUTE A DEFAULT OR BREACH OF THIS AGREEMENT. CONTRACTOR WAIVES ANY CLAIM (OTHER THAN ITS CLAIM FOR PAYMENT AS SPECIFIED IN THIS SECTION), IT MAY HAVE NOW OR IN THE FUTURE FOR FINANCIAL LOSSES OR OTHER DAMAGES RESULTING FROM THE CITY'S TERMINATION FOR CONVENIENCE.

6.0 TERMINATION FOR CAUSE BY CITY:

6.1 If Contractor defaults under this Agreement, the City Purchasing Agent or Director may either terminate this Agreement or allow Contractor to cure the default as provided below. The City's right to terminate this Agreement for Contractor's default is cumulative of all rights and remedies which exist now or in the future. Default by Contractor occurs if:

6.1.1 Contractor fails to perform any of its duties under this Agreement;

6.1.2 Contractor becomes insolvent;

6.1.3 all or a substantial part of Contractor's assets are assigned for the benefit of its creditors; or

6.1.4 a receiver or trustee is appointed for Contractor.

6.2 If a default occurs, the City Purchasing Agent or Director may, but is not obligated to, deliver a written notice to Contractor describing the default and the termination date. The City Purchasing Agent or Director at his or her sole option, may extend the termination date to a later date. If the City Purchasing Agent or Director allows Contractor to cure the default and Contractor does so to the City Purchasing Agent's or Director's satisfaction before the termination date, then the termination is ineffective. If Contractor does not cure the default before the termination date, then the City Purchasing Agent or Director may terminate this Agreement on the termination date, at no further obligation of the City.

6.3 To effect final termination, the City Purchasing Agent or Director must notify Contractor in writing. After receiving the notice, Contractor shall, unless the notice directs otherwise, immediately discontinue all services under this Agreement, and promptly cancel all orders or subcontracts chargeable to this Agreement.

7.0 TERMINATION FOR CAUSE BY CONTRACTOR:

7.1 Contractor may terminate its performance under this Agreement only if the City defaults and fails to cure the default after receiving written notice of it. Default by the City occurs if the City fails to perform one or more of its material duties under this Agreement. If a default occurs and Contractor wishes to terminate the Agreement, then Contractor must deliver a written notice to the Director describing the default and the proposed termination date.

7.2 The date must be at least 30 days after the Director receives notice. Contractor, at its sole option, may extend the proposed termination date to a later date. If the City cures the default before the proposed termination date, then the proposed termination is ineffective. If the City does not cure the default before the proposed termination date, then Contractor may terminate its performance under this Agreement on the termination date.

8.0 REMOVAL OF CONTRACTOR OWNED EQUIPMENT AND MATERIALS:

8.1 Upon expiration, or termination of this Agreement, Contractor is permitted ten (10) days within which to remove contractor-owned material and equipment from the City's premises. The City shall make such material and equipment readily available to Contractor. The time period may be extended upon approval by the Director. The City reserves the right to deny any extension of time.

V. MISCELLANEOUS

1.0 INDEPENDENT CONTRACTOR:

1.1 Contractor shall perform its obligations under this Agreement as an independent contractor and not as an employee of the City.

2.0 FORCE MAJEURE:

2.1 Timely performance by both parties is essential to this Agreement. However, neither party is liable for delays or other failures to perform its obligations under this Agreement to the extent the delay or failure is caused by Force Majeure. Force Majeure means fires, floods, explosions, and other acts of God, war, terrorist acts, riots, court orders, and the acts of superior governmental or military authority.

2.2 This relief is not applicable unless the affected party does the following:

2.2.1 uses due diligence to remove the Force Majeure as quickly as possible; and

2.2.2 provides the other party with prompt written notice of the cause and its anticipated effect.

2.3 The City may perform contract functions itself or contract them out during periods of Force Majeure. Such performance does not constitute a default or breach of this Agreement by the City.

2.4 If the Force Majeure continues for more than 30 days, the City Purchasing Agent or Director may terminate this Agreement by giving 30 days' written notice to Contractor. This termination is not a default or breach of this Agreement. CONTRACTOR WAIVES ANY CLAIM IT MAY HAVE FOR FINANCIAL LOSSES OR OTHER DAMAGES RESULTING FROM THE TERMINATION EXCEPT FOR AMOUNTS DUE UNDER THE AGREEMENT AT THE TIME OF THE TERMINATION.

3.0 SEVERABILITY:

3.1 If any part of this Agreement is for any reason found to be unenforceable, all other parts remain enforceable unless the result materially prejudices either party.

4.0 ENTIRE AGREEMENT:

4.1 This Agreement merges the prior negotiations and understandings of the Parties and embodies the entire agreement of the Parties. No other agreements, assurances, conditions, covenants (express or implied), or other terms of any kind exist between the Parties regarding this Agreement.

5.0 WRITTEN AMENDMENT:

5.1 Unless otherwise specified elsewhere in this Agreement, this Agreement may be amended only by written instrument executed on behalf of the City (by authority of an ordinance duly adopted by the City Council) and Contractor. The Director is only authorized to perform the functions specifically delegated to him or her in this Agreement.

6.0 APPLICABLE LAWS:

6.1 This Agreement is subject to the laws of the State of Texas, the City Charter and Ordinances, the laws of the federal government of the United States, and all rules and regulations of any regulatory body or officer having jurisdiction.

6.2 Venue for any litigation relating to this Agreement is Harris County, Texas.

7.0 NOTICES:

7.1 All notices to either party to the Agreement must be in writing and must be delivered by hand, facsimile, United States registered or certified mail, return receipt requested, United States Express Mail, Federal Express, Airborne Express, UPS or any other national overnight express delivery service. The notice must be addressed to the party to whom the notice is given at its address set out in Section I of this Agreement or other address the receiving party has designated previously by proper notice to the sending party. Postage or delivery charges must be paid by the party giving the notice.

8.0 NON-WAIVER:

8.1 If either party fails to require the other to perform a term of this Agreement, that failure does not prevent the party from later enforcing that term and all other terms. If either party waives the other's breach of a term, that waiver does not waive a later breach of this Agreement.

8.2 An approval by the Director, or by any other employee or agent of the City, of any part of Contractor's performance does not waive compliance with this Agreement or establish a standard of performance other than that required by this Agreement and by law. The Director is not authorized to vary the terms of this Agreement.

9.0 INSPECTIONS AND AUDITS:

9.1 City representatives may perform, or have performed, (1) audits of Contractor's books and records, and (2) inspections of all places where work is undertaken in connection with this Agreement. Contractor shall keep its books and records available for this purpose for at least 4 years after this Agreement terminates. This provision does not affect the applicable statute of limitations.

10.0 ENFORCEMENT:

10.1 The City Attorney or his or her designee may enforce all legal rights and obligations under this Agreement without further authorization. Contractor shall provide to the City Attorney all documents and records that the City Attorney requests to assist in determining Contractor's compliance with this Agreement, with the exception of those documents made confidential by federal or State law or regulation.

11.0 AMBIGUITIES:

11.1 If any term of this Agreement is ambiguous, it shall not be construed for or against any party on the basis that the party did or did not write it.

12.0 SURVIVAL:

12.1 Contractor shall remain obligated to the City under all clauses of this Agreement that expressly or by their nature extend beyond the expiration or termination of this Agreement, including but not limited to, the indemnity provisions.

13.0 PARTIES IN INTEREST:

13.1 This Agreement does not bestow any rights upon any third party, but binds and benefits the City and Contractor only.

14.0 SUCCESSORS AND ASSIGNS:

14.1 This Agreement binds and benefits the Parties and their legal successors and permitted assigns; however, this provision does not alter the restrictions on assignment and disposal of assets set out in the following paragraph. This Agreement does not create any personal liability

on the part of any officer or agent of the City.

15.0 BUSINESS STRUCTURE AND ASSIGNMENTS:

15.1 Contractor shall not assign this Agreement at law or otherwise or dispose of all or substantially all of its assets without the City Purchasing Agent's or Director's prior written consent. Nothing in this clause, however, prevents the assignment of accounts receivable or the creation of a security interest under Section 9.406 (c) of the Texas Business & Commerce Code. In the case of such an assignment, Contractor shall immediately furnish the City with proof of the assignment and the name, telephone number, and address of the Assignee and a clear identification of the fees to be paid to the Assignee.

15.2 Contractor shall not delegate any portion of its performance under this Agreement without the City Purchasing Agent's or Director's prior written consent.

16.0 REMEDIES CUMULATIVE:

16.1 Unless otherwise specified elsewhere in this Agreement, the rights and remedies contained in this Agreement are not exclusive, but are cumulative of all rights and remedies which exist now or in the future. Neither party may terminate its duties under this Agreement except in accordance with its provisions.

17.0 CONTRACTOR DEBT:

17.1 If Contractor, at any time during the term of this agreement, incurs a debt, as the word is defined in Section 15-122 of the Houston City Code of Ordinances, it shall immediately notify the City Controller in writing. If the City Controller becomes aware that Contractor has incurred a debt, she shall immediately notify contractor in writing. If Contractor does not pay the debt within 30 days of either such notification, the City Controller may deduct funds in an amount equal to the debt from any payments owed to Contractor under this agreement, and Contractor waives any recourse therefor.

EXHIBIT "A
"

DEFINITIONS

As used in this Agreement, the following terms have the meanings set out below:

"Agreement" means this contract between the Parties, including all exhibits, change orders, and any written amendments authorized by City Council and Contractor.

"City" is defined in the preamble of this Agreement and includes its successors and assigns.

“City Purchasing Agent” is defined as the person or duly authorized successor, authorized in writing to act for the City. The term includes, except as otherwise provided in this Contract, the authorized representative of the City Purchasing Agent acting within the limits of delegated authority.

“Contractor Administrator” means the representative of the Department who is responsible for the administration for the Contract.

“Contract Award Notice” means the official notification substantiated by the Notice to Proceed issued by the City Purchasing Agent to the Contractor.

“Contract Charges” means charges that accrue during a given month as defined in Article III.

“Contract Term” is defined in Article IV.

"Contractor" is defined in the preamble of this Agreement and includes its successors and assigns.

"Countersignature Date" means the date this agreement is countersigned by the City Controller.

“Director" mean the Directors/Chiefs of each of the Departments or the City Purchasing Agent for the City, or the person he or she designates.

“Effective Date” is defined as date contract is countersigned by the City Controller.

“Governing Body” means the Mayor and City Council of the City of Houston.

“Hazardous Materials” is defined in Article II (Environmental Laws).

“Notice to Proceed” means a written communication from the City Purchasing Agent to Contractor instructing Contractor to begin performance.

“Parties” mean all the entities set out in the Preamble who are bound by this Agreement.

EXHIBIT "B"
SPECIFICATIONS/SCOPE OF WORK
(To be inserted by the City at the time of Contract execution)

EXHIBIT "C"
EQUAL EMPLOYMENT OPPORTUNITY

1. The contractor, subcontractor, vendor, supplier, or lessee will not discriminate against any employee or applicant for employment because of race, religion, color, sex, national origin, or age. The contractor, subcontractor, vendor, supplier, or lessee will take affirmative action to ensure that applicants are employed and that employees are treated during employment without regard to their race, religion, color, sex, national origin, or age. Such action will include, but not be limited to, the following: employment; upgrading; demotion or transfer; recruitment advertising; layoff or termination; rates of pay or other forms of compensation and selection for training, including apprenticeship. The contractor, subcontractor, vendor, supplier or lessee agrees to post in conspicuous places available to employees, and applicants for employment, notices to be provided by the City setting forth the provisions of this Equal Employment Opportunity Clause.

2. The contractor, subcontractor, vendor, supplier, or lessee states that all qualified applicants will receive consideration for employment without regard to race, religion, color, sex, national origin or age.

3. The contractor, subcontractor, vendor, supplier, or lessee will send to each labor union or representatives of workers with which it has a collective bargaining agreement or other contract or understanding, a notice to be provided by the agency contracting officer advising the said labor union or worker's representative of the contractor's and subcontractor's commitments under Section 202 of Executive Order No. 11246, and shall post copies of the notice in conspicuous places available to employees and applicants for employment.

4. The contractor, subcontractor, vendor, supplier, or lessee will comply with all provisions of Executive Order No. 11246 and the rules, regulations, and relevant orders of the Secretary of Labor or other Federal Agency responsible for enforcement of the equal employment opportunity and affirmative action provisions applicable and will likewise furnish all information and reports required by the Mayor and/or Contractor Compliance Officer(s) for purposes of investigation to ascertain and effect compliance with this program.

5. The contractor, subcontractor, vendor, supplier, or lessee will furnish all information and reports required by Executive Order No. 11246, and by the rules, regulations, and orders of the Secretary of Labor, or pursuant thereto, and will permit access to all books, records, and accounts by the appropriate City and Federal Officials for purposes of investigations to ascertain compliance with such rules, regulations, and orders. Compliance reports filed at such times as directed shall contain information as to the employment practice policies, program, and work force statistics of the contractor, subcontractor, vendor, supplier, or lessee.

6. In the event of the contractor's, subcontractor's, vendor's, supplier's, or lessee's non-compliance with the non-discrimination clause of this contract or with any of such rules, regulations, or orders, this contract may be canceled, terminated, or suspended in whole or in part, and the contractor, subcontractor, vendor, supplier, or lessee may be declared ineligible for further City contracts in accordance with procedures provided in Executive Order No. 11246, and such other sanctions may be imposed and remedies invoked as provided in the said Executive Order, or by rule, regulation, or order of the Secretary of Labor, or as may otherwise be provided by law.

7. The contractor shall include the provisions of paragraphs 1-8 of this Equal Employment Opportunity Clause in every subcontract or purchase order unless exempted by rules, regulations, or orders of the Secretary of Labor issued pursuant to Section 204 of Executive Order No. 11246 of September 24, 1965, so that such provisions will be binding upon each subcontractor or vendor. The contractor will take such action with respect to any subcontractor or purchase order as the contracting agency may direct as a means of enforcing such provisions including sanctions for noncompliance; provided, however, that in the event the contractor becomes involved in, or is threatened with litigation with a subcontractor or vendor as a result of such direction by the contracting agency, the contractor may request the United States to enter into such litigation to protect the interests of the United States.

8. The contractor shall file and shall cause his or her subcontractors, if any, to file compliance reports with the City in the form and to the extent as may be prescribed by the Mayor. Compliance reports filed at such times as directed shall contain information as to the practices, policies, programs, and employment policies and employment statistics of the contractor and each subcontractor.

EXHIBIT "D"
MWBE REQUIREMENTS

(To be inserted by the City at the time of Contract execution)

ATTACHMENT "C"

CITY OF HOUSTON CERTIFIED MWSBE SUBCONTRACT TERMS

Contractor shall ensure that all subcontracts with M/WSBE subcontractors and suppliers are clearly labeled **"THIS CONTRACT IS SUBJECT TO MEDIATION"** and contain the following terms:

1. _____(M/WSBE subcontractor) shall not delegate or subcontract more than 50% of the work under this subcontract to any other subcontractor or supplier without the express written consent of the City of Houston's Office of Business Opportunity Director ("the Director").

2. _____(M/WSBE subcontractor) shall permit representatives of the City of Houston, at all reasonable times, to perform 1) audits of the books and records of the subcontractor, and 2) inspections of all places where work is to be undertaken in connection with this subcontract. Subcontractor shall keep such books and records available for such purpose for at least four (4) years after the end of its performance under this subcontract. Nothing in this provision shall affect the time for bringing a cause of action or the applicable statute of limitations.

3. Within five (5) business days of execution of this subcontract, Contractor (prime contractor) and Subcontractor shall designate in writing to the Director an agent for receiving any notice required or permitted to be given pursuant to Chapter 15 of the Houston City Code of Ordinances, along with the street and mailing address and phone number of such agent.

These provisions apply to goal-oriented contracts. A goal-oriented contract means any contract for the supply of goods or non-professional services in excess of $100,000.00 for which competitive proposals are required by law; not within the scope of the MBE/WBE/SBE program of the United States Environmental Protection Agency or the United States Department of Transportation; and which the City Purchasing Agent has determined to have significant MWSBE subcontracting potential in fields which there are an adequate number of known MBEs , WBE's, and or SBE's (if applicable) to compete for City contracts.

The MWSBE policy of the City of Houston will be discussed during the pre-proposal conference. For information, assistance, and/or to receive a copy of the City's Affirmative Action Policy and/or Ordinance, contact the Office of Business Opportunity Division at 832.393.0600, 611 Walker Street, 7th Floor, Houston, Texas 77002.

ATTACHMENT "D"

CITY OF HOUSTON
MAYOR'S OFFICE OF BUSINESS OPPORTUNITY & CONTRACT COMPLIANCE
M/WBE UTILIZATION REPORT

Report Period _____

PROJECT NAME & NUMBER: _____ AWARD DATE:_____

PRIME CONTRACTOR: _____ CONTRACT No.: _____

ADDRESS: _____ CONTRACT AMOUNT: _____

LIAISON/PHONE No.: _____ M/WBE GOAL: _____

M/WBE SUB/VENDOR NAME	DATE OF MOBO CERTIFICATION	DATE OF SUBCONTRACT	SUBCONTRACT AMOUNT	% OF TOTAL CONTRACT	AMOUNT PAID TO DATE	% OF CONTRACT TO DATE

Use additional pages if needed. Submit by the 15th day of the following month.
Provide support documentation on all revenues paid to end of the report period to:
M/WBEs to reflect up/down variances on contract amount

MOBO
ATTN: Carlecia D. Wright, 832-393-0600
611 Walker, 7th Floor
Houston, Texas 77002

EXHIBIT "E"
DRUG POLICY COMPLIANCE AGREEMENT

I, _____ as an owner or officer of
(Name) (Print/Type) (Title)

_____(Contractor)
(Name of Company)

have authority to bind Contractor with respect to its bid, offer or performance of any and all contracts it may enter into with the City of Houston; and that by making this Agreement, I affirm that the Contractor is aware of and by the time the contract is awarded will be bound by and agree to designate appropriate safety impact positions for company employee positions, and to comply with the following requirements before the City issues a notice to proceed:

1. Develop and implement a written Drug Free Workplace Policy and related drug testing procedures for the Contractor that meet the criteria and requirements established by the Mayor's Amended Policy on Drug Detection and Deterrence (Mayor's Drug Policy) and the Mayor's Drug Detection and Deterrence Procedures for Contractors (Executive Order No. 1-31).

2. Obtain a facility to collect urine samples consistent with Health and Human Services (HHS) guidelines and a HHS certified drug testing laboratory to perform the drug tests.

3. Monitor and keep records of drug tests given and the results; and upon request from the City of Houston, provide confirmation of such testing and results.

4. Submit semi-annual Drug Policy Compliance Declarations.

I affirm on behalf of the Contractor that full compliance with the Mayor's Drug Policy and Executive Order No. 1-31 is a material condition of the contract with the City of Houston.

I further acknowledge that falsification, failure to comply with or failure to timely submit declarations and/or documentation in compliance with the Mayor's Drug Policy and/or Executive Order No. 1-31 will be considered a breach of the contract with the City and may result in non-award or termination of the contract by the City of Houston.

Date _____ Contractor Name_____

Signature _____

Title _____

EXHIBIT "F"
CONTRACTOR'S CERTIFICATION OF NO SAFETY IMPACT POSITIONS
IN PERFORMANCE OF A CITY CONTRACT

I, _____
(Name)(Print/Type) **(Title)**

as an owner or officer of _____ (Contractor) have authority to bind the Contractor with respect to its bid, and I hereby certify that Contractor has no employee safety impact positions as defined in §5.18 of Executive Order No. 1-31 that will be involved in performing this City Contract. Contractor agrees and covenants that it shall immediately notify the City's Director of Personnel if any safety impact positions are established to provide services in performing this City Contract.

_____ _____
Date Contractor Name

_____
Signature

_____
Title

CONTRACTOR'S CERTIFICATION OF NON-APPLICATION OF
CITY OF HOUSTON DRUG DETECTION AND DETERRENCE PROCEDURES
FOR CONTRACTORS

I, _____
(NAME) **(PRINT/TYPE)**

as an owner or officer of_____ (Contractor) have authority to bind the Contractor with respect to its bid, and I hereby certify that Contractor has fewer than fifteen (15) employees during any 20-week period during a calendar year and also certify that Contractor has no employee safety impact positions as defined in 5.18 of Executive Order No. 1-31 that will be involved in performing this City Contract. Safety impact position means a Contractor's employment position involving job duties that if performed with inattentiveness, errors in judgment, or diminished coordination, dexterity, or composure may result in mistakes that could present a real and/or imminent threat to the personal health or safety of the employee, co-workers, and/or the public.

_____ _____
DATE **CONTRACTOR NAME**

_____
SIGNATURE

_____
TITLE

EXHIBIT "G"
DRUG POLICY COMPLIANCE DECLARATION

I, _____as an owner or officer of
(Name) (Print/Type) (Title)

_____(Contractor or Vendor)
(Name of Company)

have personal knowledge and full authority to make the following declarations:

This reporting period covers the preceding 6 months from _____ to _____, 20_____.

_____ Initials — A written Drug Free Workplace Policy has been implemented and employees notified. The policy meets the criteria established by the Mayor's Amended Policy on Drug Detection and Deterrence (Mayor's Policy).

_____ Initials — Written drug testing procedures have been implemented in conformity with the Mayor's Drug Detection and Deterrence Procedures for Contractors, Executive Order No. 1-31. Employees have been notified of such procedures.

_____ Initials — Collection/testing has been conducted in compliance with federal Health and Human Services (HHS) guidelines.

_____ Initials — Appropriate safety impact positions have been designated for employee positions performing on the City of Houston contract. The number of employees in safety impact positions during this reporting period is _____.

_____ Initials — From _____ to _____ the following test has occurred
(Start date) (End date)

	Random	Reasonable Suspicion	Post Accident	Total
Number Employees Tested				
Number Employees Positive				
Percent Employees Positive				

_____ Initials — Any employee who tested positive was immediately removed from the City worksite consistent with the Mayor's Policy and Executive Order No. 1-31.

_____ Initials — I affirm that falsification or failure to submit this declaration timely in accordance with established guidelines will be considered a breach of contract.

I declare under penalty of perjury that the affirmations made herein and all information contained in this declaration are within my personal knowledge and are true and correct.

_____
(Date)

_____
(Typed or Printed Name)

_____
(Signature)

_____
(Title)

EXHIBIT "H"
FEES AND COSTS
(To be inserted by the City at the time of Contract execution)

EXHIBIT "I"
PAY OR PLAY PROGRAM

(To be inserted by the City at the time of Contract execution)

FORM POP 2 (DOCUMENT 00630)

CERTIFICATION OF AGREEMENT TO COMPLY WITH PAY OR PLAY PROGRAM

Contractor Name: _____ $ _____
(Contractor/Subcontractor) *(Amount of Contract)*

Contractor Address: _____

Project No.: [GFS/CIP/AIP/File No.] _____

Project Name: [Legal Project Name] _____

POP Liaison Name: _____

In accordance with the City of Houston Pay or Play Program authorized by Ordinance 2007-534 and Executive Order 1-7, Contractor/Subcontractor agrees to abide by the terms of this Program. This certification is required of all contractors for contracts subject to the program. You must agree EITHER to PAY or to PLAY for all covered employees. The Contractor/Subcontractor may also Pay on behalf of some covered employees and Play on behalf of other covered employees.

The Contractor/Subcontractor will comply with all provisions of the Pay or Play Program and will furnish all information and reports requested to determine compliance with program requirements of the Pay or Play Program (See Executive Order 1-7 for the terms of the Pay or Play program) The criteria of the program is as follows:

The Contractor/Subcontractor agrees to **"Pay"** $1.00 per hour for work performed by covered employees under the contract with the City. If independent contract labor is utilized the Contractor/Subcontractor agrees to report hours worked by the independent contract laborer and pay $1.00 per hour for work performed.

Otherwise the Contractor/Subcontractor agrees to **"Play"** by providing health benefits to each covered employee. The health benefits must meet the following criteria:

1. The employer will contribute no less than $150 per employee per month toward the total premium cost for single coverage only; and
2. The employee contribution, if any amount, will be no greater than 50% of the total premium cost and no more than $150 per month.
3. Pursuant to E.O. 1-7 section 4.04 a contractor is deemed to have complied with respect to a covered employee who is not provided health benefits if the employee refuses the benefits and the employee's contribution to the premium is no more than $40 per month.

Please select whether you choose to:	Pay	Play	Both

The Contractor/Subcontractor will file compliance reports with the City, which will include activity for covered employees subject to the program, in the form and to the extent requested by the administering department. Compliance reports shall contain information including, but not limited to, documentation showing employee health coverage and employee work records. **Note: The Contractor is responsible to the City for the compliance of covered employees of covered subcontractors and only forms that are accurate and complete will be accepted.**

*Estimated Number of:	Prime Contractor	Sub-Contractor
Total Employees on City Job		
Covered Employees		
Non-Covered Employees		
Exempt Employees		

*Required

I hereby certify that the above information is true and correct.

_____ _____
CONTRACTOR (Signature) DATE

_____
NAME AND TITLE (Print or Type)