DRAFT
GEOTECHNICAL STUDY
PROGRAM MANAGEMENT OFFICE AT IAH
GEORGE BUSH INTERCONTINENTAL AIRPORT
HOUSTON, TEXAS

SUBMITTED TO
JACOBS – GLOBAL BUILDINGS
5985 ROGERDALE
HOUSTON, TEXAS 77072

BY
HVJ ASSOCIATES, INC.
HOUSTON, TEXAS
MAY 5, 2015

REPORT NO. HG1213270
KEY MAP NO. 334 A

Houston
Austin
Dallas
San Antonio

6120 S. Dairy Ashford Rd.
Houston, TX 77072-1010
281.933.7388 Ph
281.933.7293 Fax
www.hvj.com

May 5, 2015

Stephen A. Clarke, P.E.
Jacobs - Global Buildings
5985 Rogerdale Road
Houston, Texas 77072

Re: Geotechnical Investigation
Program Management Office at IAH
Houston, Texas
Owner: Houston Airport System (HAS)
HVJ Report No. HG1213270

Mr. Clarke:

Submitted herein is the draft report of our geotechnical investigation for the above referenced project. The study was performed in accordance with HVJ Proposal Number HG1213270 dated January 14, 2014 (Revised April 2nd, 2015) and subject to the limitations presented in this report.

It has been a pleasure to work for you on this project and we appreciate the opportunity to be of service. Please notify us if there are questions or if we may be of further assistance.

Sincerely,

HVJ ASSOCIATES, INC.
Texas Firm Registration No. F-000646

DRAFT
Sharmi Vedantam, PE
Project Manager

DRAFT
Fabrizio Di Camillo
Staff Engineer

SV/FD

Copies submitted: 2

This document was released for the purpose of interim review under the authority of Sharmi P. Vedantam, PE 100218 on May 5, 2015. It is not to be used for construction, bidding or permit purposes.

- Main Text – 14 pages
- Plates – 5 pages
- Appendix A – 9 pages
- Appendix B – 3 pages
- Appendix C –3 pages

TABLE OF CONTENTS

Page

1 EXECUTIVE SUMMARY I

2 INTRODUCTION 1
2.1 General 1
2.2 Scope of Work 1

3 FIELD INVESTIGATION 1
3.1 General 1
3.2 Sampling Method 1
3.3 Water Level Measurements 1

4 LABORATORY TESTING 2

5 SITE AND SUBSURFACE CONDITIONS 2
5.1 General Geology 2
5.2 Geologic Faulting 3
5.3 Soil Stratigraphy 3
5.4 Groundwater 3

6 FOUNDATION RECOMMENDATIONS 4
6.1 General 4
6.2 Expansive Soil 4
6.3 Foundation Selection 5
6.4 Drilled Shaft Foundation Recommendations 5
6.5 Drilled Shaft Construction Recommendations 6
6.6 Floor Slab 7
6.7 Building Settlement 7
6.8 Foundation Monitoring 7
6.9 Site Preparation and Select Fill 7
6.10 Vegetation 7

7 PARKING LOT DESIGN RECOMMENDATIONS 8
7.1 General 8
7.2 Pavement Sections 8
7.3 Preparation of Subgrade for Parking Lot 8

8 MONITORING 9
8.1 Excavation Safety 9

9 DESIGN REVIEW 9

10 LIMITATIONS 9

PLATES

Plate

SITE VICINITY MAP 1

PLAN OF BORINGS 2

GEOLOGY 3

FAULT MAP 4

APPENDICES

Appendix

BORING LOGS AND KEY TO TERMS & SYMBOLS ..... A

SUMMARY OF LABORATORY TEST RESULTS ..... B

DRILLED SHAFT CAPACITY CURVES C

1 EXECUTIVE SUMMARY

HVJ Associates, Inc. was retained by Jacobs - Global Buildings to perform a geotechnical investigation for the construction of a Program Management Office Building and its parking lot at IAH on east side of the airport near Lee Road. Our scope of work includes performing subsurface soils investigation and providing boring logs, foundation recommendations, and pavement recommendations for the parking lot.

The subsurface stratigraphy at the project site was determined by drilling and sampling two 25-foot and three 40-foot borings at the location of the proposed PMO building and three 5 foot borings at the location of the parking lot. Laboratory tests and engineering analyses were performed to provide recommendations pertaining to design and construction of the proposed building and parking lot.

A brief summary of the findings on this investigation based on soil borings and pertinent recommendations are as follows:

1. A generalized summary of the subsurface conditions in our borings is shown below in Table 1-1 which is intended to provide a conceptual framework for considering the site and is not intended as a basis for any particular analysis. Substantial deviations from the summarized conditions should be accounted for in design and construction. Details of the subsurface stratigraphy encountered in the borings are shown on the boring logs presented in Appendix A.

Table 1-1 – Generalized Soil Profile

Stratum	Depth (below grade), Feet		Material
	From	To	
I	Surface	5 to 16	*Cohesionless Soils*: Loose to Medium Dense Sandy Silt (ML) and Sand with Silt (SP- SM).
II	5 to 16	25 to 40	*Cohesive soils:* Stiff to very Stff Fat Clay (CH), Lean Clay with Sand and Lean Clay (CL)

2. Groundwater was encountered in the borings at a depth ranging from 11 to 14 feet below grade during the drilling operations.

3. A literature review of surface faults near the project area was made from published reports. The primary objective of this review was to evaluate available information from published and open file reports. Based on our review, the project site is situated about 2.5 miles west of the Humble Salt Dome system and about 2.5 miles east of the Hardy fault. Faulting is not anticipated to impact the project site. A detailed fault study is beyond the scope of this study.

4. We have provided foundation recommendations for the proposed building in Section 6 of this report.

5. The pavement design recommendations for the proposed parking lot are presented in Section 7 of the report.

Please note that this executive summary does not fully relate our findings and opinions. These findings and opinions are only presented through our full report.

2 INTRODUCTION

2.1 General

HVJ Associates, Inc. was retained by Jacobs - Global Buildings to perform a geotechnical investigation for the construction of a Program Management Office Building and its parking lot at IAH on east side of the airport near Lee Road. Our scope of work includes performing subsurface soils investigation and providing boring logs, foundation recommendations, and pavement recommendations for the parking lot.

2.2 Scope of Work

The primary objectives of this study were to investigate subsurface conditions at the site. The objectives were accomplished by:

Drilling and sampling two 25-foot, three 40-foot, and three 5-foot borings to investigate soil stratigraphy and to obtain samples for laboratory testing.

Performing laboratory tests to determine physical characteristics of the soils.

Performing engineering analyses to develop design guidelines and recommendations for foundation and pavement design.

Subsequent sections of this report contain descriptions of the field exploration, laboratory-testing program, general subsurface conditions, and design and construction recommendations.

3 FIELD INVESTIGATION

3.1 General

The field exploration program was performed on March 13, 2015 and March 14, 2015. Subsurface conditions at the site were investigated by drilling and sampling two 25-foot, three 40-foot, and three 5-foot borings to investigate soil stratigraphy and to obtain samples for laboratory testing. The approximate boring locations are indicated on the plan of borings, Plate 2. The soil borings were drilled using truck mounted drilling equipment using dry auger and wet rotary techniques.

3.2 Sampling Method

All samples were drilled continuously to 20 feet and at 5 foot intervals thereafter. Cohesive soil samples were obtained with a three-inch thin-walled (Shelby) tube sampler in general accordance with ASTM D-1587 standard. Each sample was removed from the sampler in the field, carefully examined and then classified.

The shear strength of the cohesive soils was estimated by a hand penetrometer in the field. Suitable portions of each sample were sealed and packaged for transportation to our laboratory.

Detailed descriptions of the soils encountered in the borings are given in the boring logs presented in Appendix A. A key to the terms and symbols used for soil classification on the boring logs is also presented in Appendix A.

3.3 Water Level Measurements

Groundwater level observations were made in the open boreholes during drilling operations. Water was encountered in the borings at a depth ranging from 11 to 14 feet below the existing grade Details of the ground water levels are presented on the boring logs in Appendix A.

4 LABORATORY TESTING

Selected soil samples were tested in the laboratory to determine applicable physical and engineering properties. The field and laboratory program included moisture content, Atterberg Limits, hand penetrometer, percent passing No. 200 Sieve, unconsolidated undrained (UU) and unit weight tests.

The Atterberg Limits, moisture content and percent passing No. 200 Sieve were used to verify field classification by the Unified Soils Classification System, while the compression tests were performed to obtain the undrained shear strength of the soil.

The type and number of tests performed for this investigation are summarized below:

Table 4-1 Type and Number of Laboratory Tests

Type of Test	Number of Tests
Moisture Content (ASTM D2216)	41
Atterberg Limits (ASTM D4318)	10
Percent Passing No. 200 Sieve (ASTM D1140)	26
Hand Penetrometer	22
Unit Dry Weight (ASTM D 2166/2850)	10
Unconsolidated Undrained (UU) (ASTM D2850)	10

The laboratory test results are shown on the boring logs in Appendix A. A summary of the laboratory test results is presented in Appendix B.

5 SITE AND SUBSURFACE CONDITIONS

5.1 General Geology

There are two major surface geological formations that exist in the Houston area: the Beaumont formation and the Lissie formation. The Beaumont formation is a relatively younger formation generally found to the southeast of the Lissie formation. The Beaumont formation dips southeastward and extends beneath beach sand and waters of the Gulf of Mexico as far as the continental shelf. The project site is located in an area where the Lissie formation is typically encountered.

The upper Lissie formation is sometimes denoted as the Montgomery formation. The upper Lissie formation is heterogeneous, containing interbedded layers of clay, sand and silt. It was deposited in mid-Pleistocene times in shallow coastal river channels and flood plains.

The clay present in the formation has been preconsolidated by a process of desiccation. Numerous wetting and drying cycles have produced a network of randomly oriented and closely spaced joints, which are sometimes slickensided, that is, have a shiny appearance when exposed. The joint pattern strongly influences the engineering behavior of the soil.

The sand layers vary in compactness from loose to very dense, and in thickness from a fraction of an inch to many feet due to an irregular depositional environment. Sands are generally subrounded to subangular and vary from coarse to very fine, are poorly graded, and often contain significant amounts of silt-sized particles in the sand matrix.

5.2 Geologic Faulting

The tectonic history of the Texas Gulf Coast includes a relatively stable depositional cycle since the Cretaceous Period (about 65 million years). During this period the area has been subjected to deposition of clays, silts, and sands resulting in over 30 thousand feet of sedimentary rocks. Underlying this clastic sequence are salt formations, which have migrated upwards to produce the typical salt dome features associated with the Texas Gulf Coast. In conjunction with salt movement, dewatering and compaction of some of the deeper sediments in the basin have resulted in the development of growth faults.

A review of surface faults was made from geologic literature and available in-house records. The primary objective of this review was to evaluate available information from these reports concerning the presence of active faults in the project area. Based on our review, the project site is situated about 2.5 miles west of the Humble Fault system and about 2.5 miles east of the Hardy fault. HVJ believes that faulting is not anticipated to impact the project site. However, it should be noted that unmapped faults may exist in the project area. A detailed fault study was not within the scope of this study.

5.3 Soil Stratigraphy

Our interpretation of soil and water conditions at the project site is based on information obtained at the boring locations only. This information has been used as the basis for our conclusions and recommendations. Significant variations at areas not explored by the project borings may require reevaluation of our findings and conclusions.

A generalized summary of the subsurface conditions in our borings is shown below in Table 5-1. The generalized profile is intended to provide a conceptual framework for considering the site and is not intended as a basis of any particular analysis. Substantial deviations from the summarized conditions exist at several of the boring locations and should be accounted for in design and construction. Details of the subsurface stratigraphy encountered in the borings are shown on the boring logs presented in Appendix A.

Table 5-1 – Generalized Soil Profile

Stratum	Depth (below grade), Feet		Material
	From	To	
I	Surface	5 to 16	*Cohesionless Soils*: Loose to Medium Dense Sandy Silt (ML) and Sand with Silt (SP- SM).
II	5 to 16	25 to 40	*Cohesive soils:* Stiff to very Stff Fat Clay (CH), Lean Clay with Sand and Lean Clay (CL)

Specific types and depths of subsurface strata encountered at the site are shown on the boring logs presented in Appendix A.

5.4 Groundwater

Groundwater was encountered at the boring locations during the drilling operations. Table 5-4 shows a record of the groundwater readings obtained during drilling.

Table 5-2– Groundwater Observations

Boring No.	Groundwater Depth First Encountered (feet)	Groundwater Reading	
		Groundwater depth after 5 min. (feet)	Groundwater depth after 10 min. (feet)
B-1	14.0	8.4	8.2
B-2	14.0	8.2	8.2
B-3	11.0	8.5	8.5
B-4	12.0	8.8	8.1
B-5	14.0	9.0	9.0
CB-1	Dry	Dry	Dry
CB-2	Dry	Dry	Dry
CB-3	Dry	Dry	Dry

It should be noted that water levels determined during drilling may not accurately reflect the true groundwater conditions, and therefore should only be considered as approximate.

Groundwater levels measured in open standpipe piezometers are, on the other hand, more accurate; however, these readings will fluctuate seasonally and in response to rainfall. Other factors that might impact piezometric groundwater levels include leakage from existing sewers and/or sanitary sewers.

6 FOUNDATION RECOMMENDATIONS

6.1 General

We understand that the project will involve construction of a Program Management Office (PMO) building at IAH with associated parking lots.

6.2 Expansive Soil

One of the major design factors for lightly loaded structures in the Gulf Coast area is the shrinking and swelling potential of fine-grained soils. The shrink/swell movements can be estimated through the use of the Plasticity Index (PI). Generally, the higher the PI of a material, the greater the potential for soil movements during moisture changes. The results of the Atterberg Limits tests indicate that the soils at the site have a very low expansion potential (Effective PI = 4).

Shrink-swell movement occurs in response to soil moisture content changes beneath the slab. Moisture changes occur beneath the slab due to seasonal changes in the relative amount of rainfall and evaporation potential. These variations cause cyclic changes in soil moisture to depths of up to eight feet in the area. Also, soil moisture changes result from the construction of a slab-on-grade floor due to the presence of the slab/vapor barrier/grade beam system. The installation of the slab, vapor barrier, and grade beams reduces the natural moisture transfer from the subsurface beneath the building and generally causes the soil moisture content to increase in the soil beneath the building after construction. Another significant cause of soil moisture change is changes in vegetation, particularly trees associated with landscaping.

Potential Vertical Rise (PVR) values were estimated by the TEX 124-E method for the upper 7 feet of soils at the site, using worst condition (dry state), average condition, wet condition and the existing condition at the time of boring. The PVR represents the potential ability of a soil material

at a specific density, moisture and loading condition to swell. It indicates the potential movement of the soils that may be realized if the soils become wet from a relatively dry condition. The PVR values are provided to demonstrate the relative severity of the swell potential of the clayey soils at the site. However, this value is not intended to be used directly as a design parameter. The actual amount of swell the slab may experience depends on many variables, such as the time of year the slab is poured, which are not known at the time of this study. The soil on site at the top seven feet consisted of sands and silts. We have calculated PVR values for the site in general at the top 7 feet of soil and are presented in the table below.

Table 6-1 Potential Vertical Rise for the Soils on Site

Condition	PVR (inches)
Dry	0.20
Average	0.20
Wet	0.20
Existing	0.20

6.3 Foundation Selection

Foundations for the proposed structures must satisfy two basic design criteria. First, the bearing pressure transmitted by the foundation should not exceed the allowable bearing capacity computed with an adequate factor of safety. Second, foundation movement due to soil volume change must be within desirable limits.

The results of the Atterberg Limits tests indicate that the soils at the site have a low expansion potential (effective PI=4). Hence the soil conditions would permit the construction of the structure founded in shallow foundations, however, lateral loading is expected to act on the proposed structures, hence deep foundation like straight sided drilled shafts are recommended for the building.

6.4 Drilled Shaft Foundation Recommendations

The proposed building may be supported on straight sided drilled shafts. The ultimate compressive capacity, Q_{ult}, for a given embedded length is taken as the skin friction along the shaft wall, Q_s, and the end bearing at the tip, Q_p. Skin friction contributed at the top 10 feet from ground surface should be ignored to account for construction disturbances, and loss of adhesion between shaft wall and soil due to moisture fluctuation.

$$Q_{ult} = Q_s + Q_p = fA_{sa} + qA_E$$

Where:

A_{sa} = Embedded surface area
f = Unit skin friction
q = Unit end bearing
A_E = Cross-sectional end area

Ultimate compressive capacity curves that include skin friction and tip resistance were developed based on undrained shear strength test results using the alpha method for clays. Undrained shear strength values UU tests are used as inputs to generate ultimate capacity curves for 24, 30, 36, 42 and 48 inch diameter drilled shafts using SHAFT 6.0 program. The capacity curves for ultimate skin

and tip capacity are presented in Appendix C. These curves were generated based on a generalized profile as a conservative scenario.

In order to determine the design allowable capacity, a factor of safety must be applied to the total ultimate capacity. We recommend a factor of safety of at least 2 (two) be used to calculate allowable axial load under compression. For drilled shafts under tension, the skin friction charts should be used and should be reduced with a factor of safety equal to 3 (three). The choice of safety factor is dependent on duration of loading, confidence in soil parameters, design life of structure, the expected quality of construction control and the consequences of failure.

6.5 Drilled Shaft Construction Recommendations

Shaft construction and installation should follow City of Houston Standard Specification 02465 for drilled shaft foundation. Presented below are a few specific recommendations. Slurry displacement method should be followed for drilled shaft construction. Assessment of the need for groundwater control and installation of appropriate dewatering equipment is the contractor's responsibility. It should be noted that groundwater levels change due to seasonal changes and rainfall. In any case, the groundwater control system used must provide a relatively dry, stable bearing surface. Presented below are a few specific recommendations.

1. Drilled shaft excavations should be inspected for verticality and side sloughing. Verticality is specified at one inch in ten feet of the shaft length, and should be checked to the full depth of dry augering prior to introducing drilling mud.

2. Slurry should contain four to eight percent by weight of bentonite additive and should satisfy the slurry specification set forth ACI 336.1-89 Section 2.3.5.2.e. ACI slurry specifications are required to assure suspension of detritus from the drilling operations, and to assure adequate cleaning of the slurry prior to concreting. Cleaning of the slurry is important to prevent deposition of detritus on reinforcement cages and ensure that inclusions of detritus will not be formed within the concrete mass.

3. Before placing concrete, the shaft bottom should be cleaned out with a drilling bucket in order to remove any sediments that may not be displaced by the concrete. The shaft bottoms should be cleaned with a "clean-out" bucket until rotation on the bottom without crowd (i.e. penetration under force) produces little spoil. Probing after clean-out is essential to verify the condition of the base of the shaft.

4. A computation of the final concrete volume for each shaft should be made. Shafts taking an unreasonably high or low volume of concrete should be cored to check their integrity.

5. Concrete should conform to the requirements ACI 336.1-89 Section 2.3.5.5.

6. The casing should always remain at least five feet below the level of the concrete during placement. HVJ's analyses assume no casing will be left in place. HVJ should be informed if casing will be left in place so revised shaft capacity calculations may be provide.

7. Shaft excavations should not be made within two shaft diameters (edge to edge) of shafts that have been concreted within the last 24 hours or from open shaft excavation.

6.6 Floor Slab

The floor slab can be supported at grade. Positive drainages must be provided under the floor slab area at all times. We recommend a minimum of 12 inches of select fill to be placed underneath the slab.

6.7 Building Settlement

With the indicated bearing pressures and loads for the building, settlement is estimated to be less than one (1) inch. Differential settlement will result from variances in subsurface condition, loading conditions and construction procedures, such as cleanliness of the bearing area. Differential movement between adjacent columns is estimated to be about one-half the total settlement.

6.8 Foundation Monitoring

We recommend that any fill placed beneath the structures be monitored to determine compliance with the plasticity and compaction requirements discussed above by an accredited construction materials testing laboratory. HVJ Associates would be pleased to provide this service.

It is recommended that each foundation excavation be inspected by the Project Engineer, Architect, or Owner's Representative prior to placing concrete. The excavation should be checked to verify that a) the excavation has been constructed to the specified dimensions at the correct depth and into appropriate stratum as recommended in this report, and b) the loose cuttings and any soft-compressible materials have been removed from the bottom of the excavation. Placement of concrete should be accomplished as soon as possible to reduce changes in the state of the stress and caving of the foundation soils. No piers should be poured without the prior approval of the Project Engineer, Architect, or Owner's Representative.

6.9 Site Preparation and Select Fill

The building area should be stripped of all vegetation any other deleterious materials or gravels. Stripped areas should be appropriately graded and shaped to prevent ponding of water. Pumping may occur if the site becomes wet. Structural fill required to raise the grade or backfill grub holes should consist of lean silty or sandy clay with a Liquid Limit less than 40 and a Plasticity Index between 7 to 20. Fill material that is used should be placed in loose lifts not exceeding eight inches and should be compacted to 95 percent of the maximum dry density at a moisture content between optimum and 3% wet of optimum as determined by ASTM D 698-91.

6.10 Vegetation

Plants consume water to live and obtain this water through their root system. Landscaping which includes plantings close enough to the foundation such that the plantings consume significant moisture from the foundation soils are a common cause of foundation problems in areas with plastic soils. To avoid these problems, we recommend that landscaping be planned such that the plants are located at least one-half their mature width away from the edge of the foundations. Therefore, small shrubs should be located at least 2 feet, large shrubs at least 5 feet, and tress at least 20 feet from the edge of the foundation. For information on the mature widths of particular plants, we suggest consulting a landscape architect.

7 PARKING LOT DESIGN RECOMMENDATIONS

7.1 General

The project includes construction of a parking lot. We have utilized our soil borings CB-1, CB-2 and CB-3 to provide recommendations for the parking lot.

7.2 Pavement Sections

Based on the subgrade soils and our experience, the following pavement sections are recommended for the extension of the pavement sections at this site.

Types of loads	Rigid Pavement Section	Flexible Pavement Section
Heavy Duty (10^6 ESALs)	7" Concrete Compacted Subgrade	8.5" Asphaltic Concrete 6" Crushed Stone Base Compacted Subgrade
Medium Loads (10^5 ESALs)	6" Concrete Compacted Subgrade	5" Asphaltic Concrete 6" Crushed Stone Base Compacted Subgrade
Light Loads (10^4 ESALs or less)	5" Concrete Compacted Subgrade	2" Asphaltic Concrete 6" Crushed Sone Base Compacted Subgrade

We recommend using sections corresponding to medium loads for the design of parking lot. The design sections should be reviewed if specific traffic loading information is available. HVJ further recommends that an appropriate drainage system should be provided to drain the surface water as quickly as possible. Providing appropriate drainage system will reduce development of future pavement distress due to softened subgrade.

7.3 Preparation of Subgrade for Parking Lot

Subgrade preparation for the proposed pavement sections should consist of clearing, stripping, proof-rolling and cement (driveways and pavements) or mechanical (sidewalks) stabilization. HVJ recommends the following procedures for subgrade preparation:

1. Demolish and remove the existing pavement and subgrade to the grade required for the proposed pavement section, driveway, or sidewalk.

2. Strip the surface soil to suitable depths. In areas where soft, compressible or loose clay soils are encountered, additional stripping may be required. Stripping should extend a minimum of two feet beyond the edge of the proposed pavement.

3. Surfaces exposed after clearing and grubbing should be proof-rolled with heavy equipment, to identify any underlying zones or pockets of soft soils and to remove such weak materials. Proof rolling should be in accordance with TxDOT Standard Specification Item 216 or equivalent Specification.

4. When required, scarify the upper six to eight inches of exposed surface as required, mix with 5% of cement at locations where clays are encountered at the surface and compact it to 95 percent of standard Proctor (ASTM D698). The cement content is only preliminary estimates based on the subsurface soils and actual percentage of cement should be

confirmed by conducting appropriate lab tests on the exposed subgrade material at the time of construction.

8 MONITORING

8.1 Excavation Safety

As required under OSHA regulations, the contractor should provide a "competent person" to inspect trench and shaft excavation daily before the start of work, as needed during the shift, and after every rainstorm or other hazard increasing occurrence. When the competent person finds evidence of a hazardous condition, exposed workers should be removed from the hazardous area until the necessary precautions have been taken to ensure their safety. A competent person means one who is capable of identifying existing and predictable hazards in the surroundings or working conditions which are unsanitary, hazardous or dangerous to workers, and who has authorization to take prompt corrective measures to eliminate them.

9 DESIGN REVIEW

HVJ Associates should be retained to review the final design plans and specifications for this project. During all excavation, grading and construction phases of this project, HVJ should provide the materials testing verification and observation services so our geotechnical recommendations may be interpreted and implemented correctly.

10 LIMITATIONS

This investigation was performed for the exclusive use of Jacobs for the design and for the construction of the PMO building at IAH. HVJ Associates, Inc. has endeavored to comply with generally accepted geotechnical engineering practice common in the local area. HVJ Associates, Inc. makes no warranty, express or implied. The analyses and recommendations contained in this report are based on data obtained from subsurface exploration, laboratory testing, the project information provided to us and our experience with similar soils and site condition. The methods used indicate subsurface conditions only at the specific locations where samples were obtained, only at the time they were obtained, and only to the depths penetrated. Samples cannot be relied on to accurately reflect the strata variations that usually exist between sampling locations. Should any subsurface conditions other than those described in our boring logs be encountered, HVJ Associates, Inc. should be immediately notified so that further investigation and supplemental recommendations can be provided.

PLATES

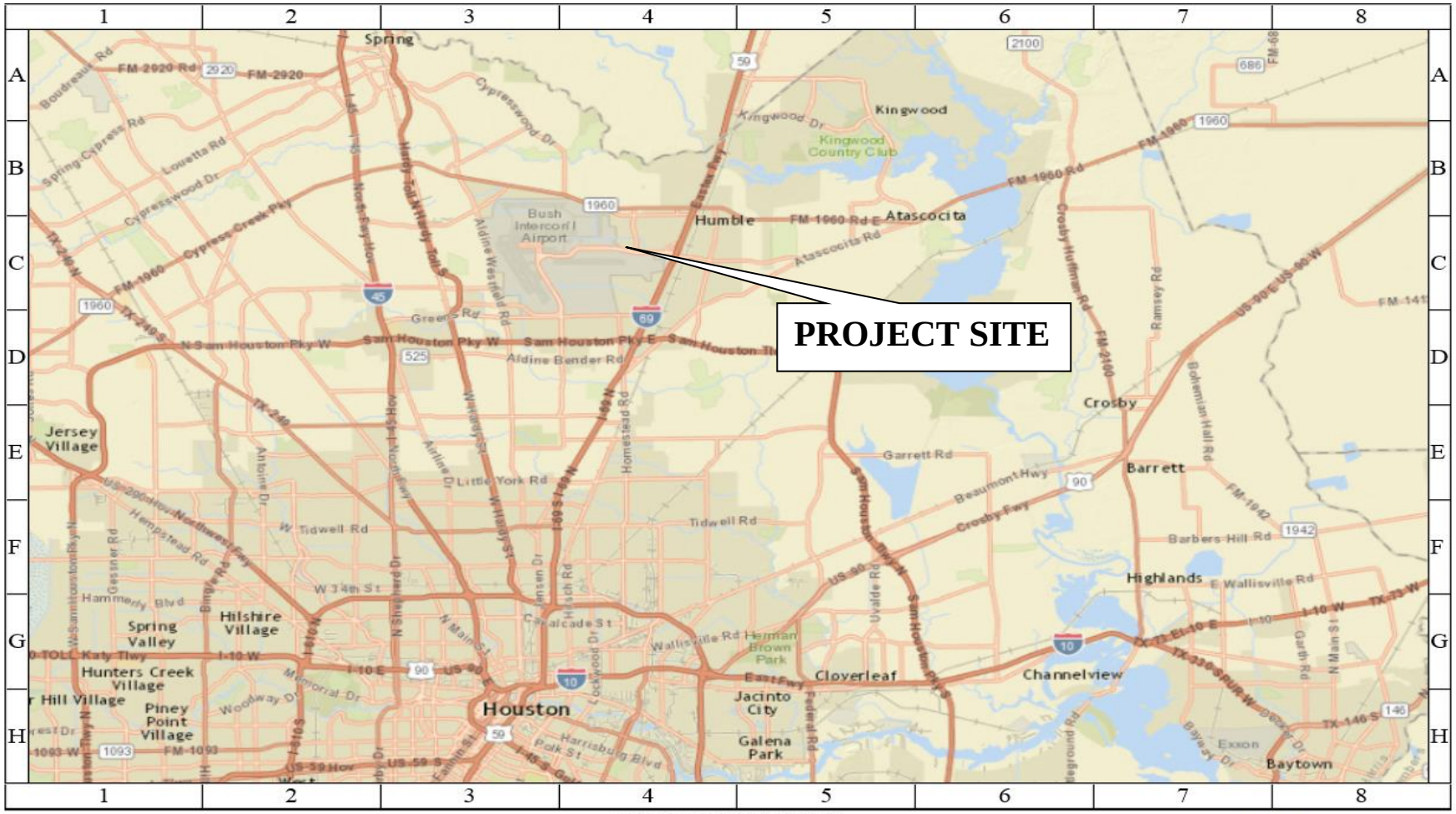

CITY OF HOUSTON
Department of Public Works and Engineering
Geographic Information & Management System (GIMS)

1 inch = 7486 feet

DISCLAIMER: THIS MAP REPRESENTS THE BEST INFORMATION AVAILABLE TO THE CITY.
THE CITY DOES NOT WARRANT ITS ACCURACY OR COMPLETENESS.
FIELD VERIFICATIONS SHOULD BE DONE AS NECESSARY.

HVJ ASSOCIATES
6120 S. Dairy Ashford Road
Houston, Texas 77072-1010
281.933.7388 Ph
281.933.7293 Fax

DATE: 04/19/2015	APPROVED BY: SV	PREPARED BY: KL

SITE VICINITY MAP
PROGRAM MANAGEMENT OFFICE AT IAH

PROJECT NO.: HG1213270	DRAWING NO.: PLATE 1

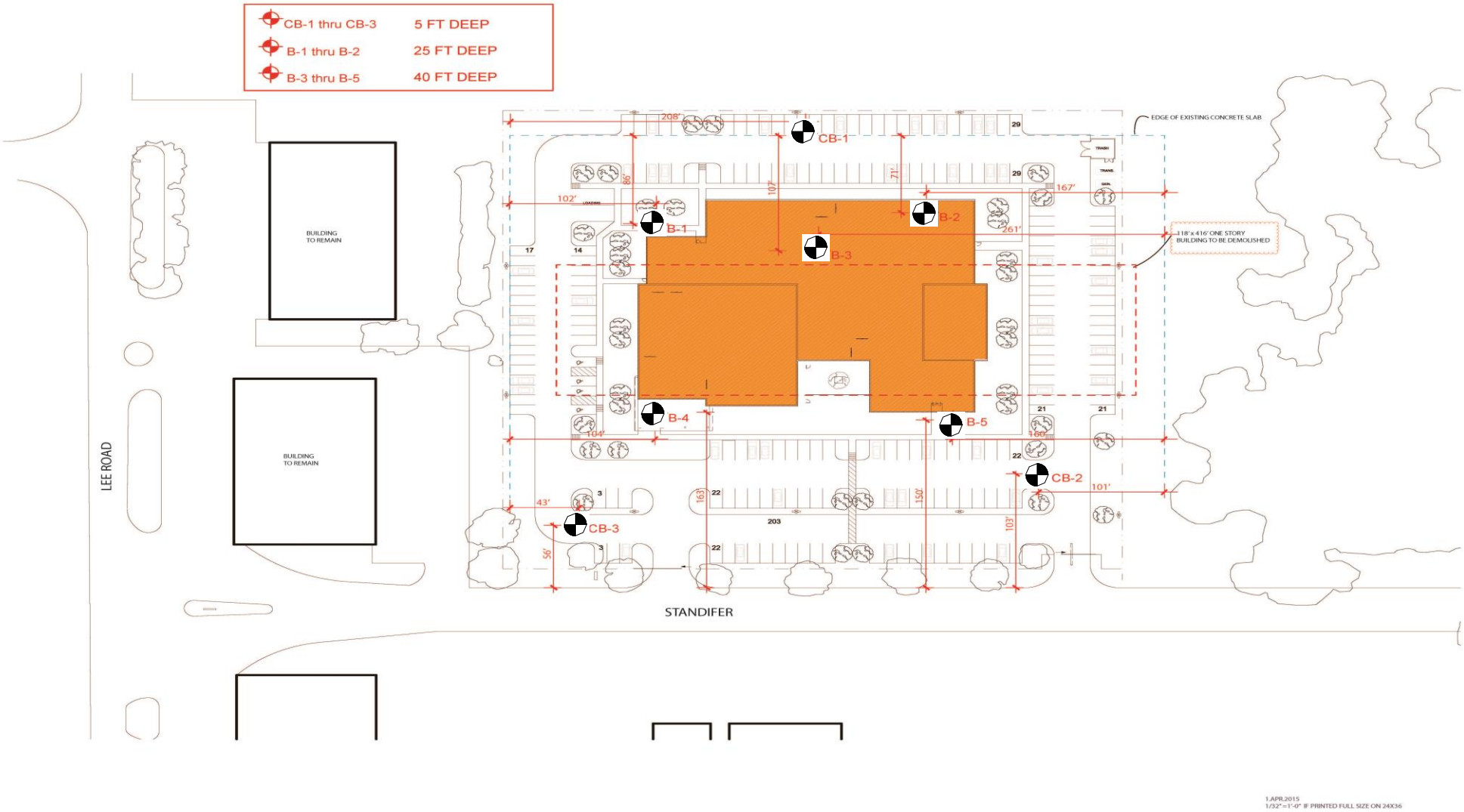

LEGEND:

APPROXIMATE BORING LOCATIONS

HVJ ASSOCIATES 6120 S. Dairy Ashford Road Houston, Texas 77072-1010 281.933.7388 Ph 281.933.7293 Fax		
DATE: 08/23/2015	APPROVED BY: SV	PREPARED BY: KL
PLAN OF BORINGS PROGRAM MANAGEMENT OFFICE AT IAH		
PROJECT NO.: HG1213270	DRAWING NO.: PLATE 2	

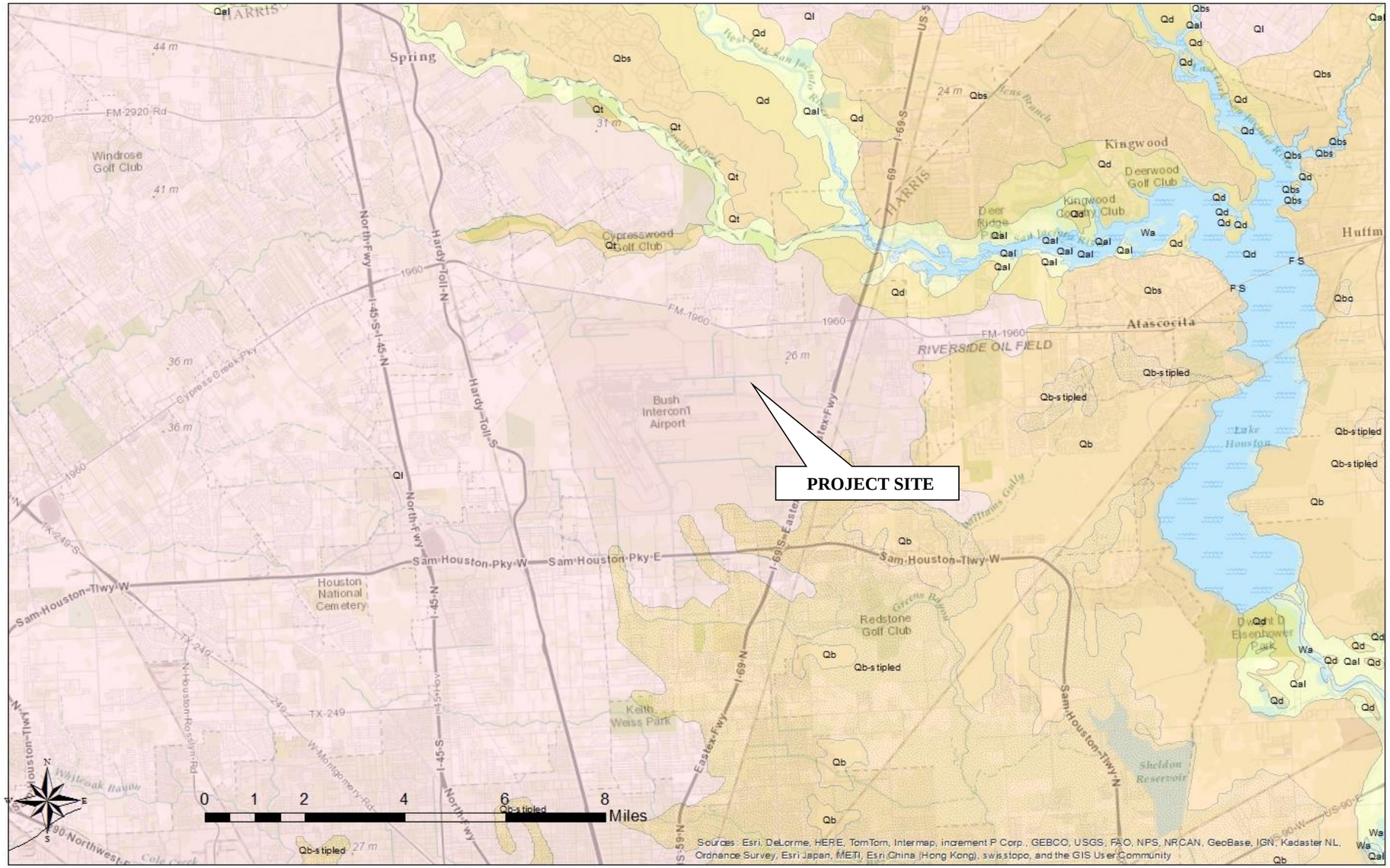

Ql

Lissie Formation -- Upper part, clay, silt, sand, and very minor siliceous gravel of granule and small pebble size gravel more abundant northwestward, locally calcareous, concretions of calcium carbonate, iron oxide, and iron-manganese oxides common in zone of weathering; fluviatile; surface fairly flat and featureless except for numerous rounded shallow depressions and pimple mounds, bower part, clay, silt, sand, and minor amount of gravel; gravel slightly coarser than in upper part, noncalcareous, iron oxide concretions mare

Qb-stipled

Beaumont Formation -- Dominantly clay and mud of low permeability, high water-holding capacity, high compressibility, high to very high shrink-swell potential, poor drainage, level to depressed relief, low shear strength, and high plasticity; geologic units include interdistributary muds, abandoned channel-fill muds, and overbank fluvial muds

HVJ ASSOCIATES
6120 S. Dairy Ashford Road
Houston, Texas 77072-1010
281.933.7388 Ph
281.933.7293 Fax

DATE: 05/04/2015	APPROVED BY: SV	PREPARED BY: RS

GEOLOGIC MAP
PROGRAM MANAGEMENT OFFICE AT IAH

PROJECT NO.: HG1213270	DRAWING NO.: PLATE 3

HVJ ASSOCIATES
6120 S. Dairy Ashford Road
Houston, Texas 77072-1010
281.933.7388 Ph
281.933.7293 Fax

DATE: 05/04/2015	APPROVED BY: SV	PREPARED BY: RS

FAULT MAP
PROJECT MANAGEMENT OFFICE AT IAH

PROJECT NO.: HG1213270	DRAWING NO.: PLATE 4

APPENDIX A

BORING LOGS AND KEYS TO TERMS & SYMBOLS

LOG OF BORING B-1

PROJECT: Program Management Office at IAH
LOCATION: N: N/A; E: N/A
STATION: N/A
OFFSET: N/A
SURFACE ELEVATION: N/A

PROJECT NO.: HG1213270
COMPLETION DEPTH: 25 FT
CAVE-IN DEPTH: 9 FT
DATE: 4/15/15

SAMPLER: Shelby Tube/Split Spoon
DRY AUGER: 0 TO 14 FT
WET ROTARY: 14 TO 25 FT

UNDRAINED SHEAR STRENGTH, TSF: ○ HAND PENETROMETER; ● UNCONFINED COMPRESSION; ■ UNCONSOLIDATED-UNDRAINED TRIAXIAL COMPRESSION; △ TORVANE (0.5, 1.0, 1.5, 2.0, 2.5)

ELEVATION, FT	DEPTH, FT	DESCRIPTION OF MATERIAL	STANDARD PENETRATION TEST, BLOWS PER FOOT	PERCENT PASSING NO. 200 SIEVE	DRY UNIT WEIGHT, PCF	MOISTURE CONTENT, %	LIQUID LIMIT, %	PLASTIC LIMIT, %	PLASTICITY INDEX, %
	0	Pavement: 1.5" Asphaltic Concrete, 10" Cement Stabilized Sand							
		Loose to medium dense, brown, SILT WITH SAND (ML)	9	60.6		14			
	5		6						
			12	60.1					
			7			18			
	10		14						
		Medium dense, brown, SAND WITH SILT (SP-SM)	18	8.3		24			
▽	15		4						
		Very stiff, reddish brown, FAT CLAY (CH)		99.7	101	28	62	30	32
	20								
						27			
	25								

DEPTH TO WATER IN BORING:
▽ FREE WATER DURING DRILLING: 14.0 FT; AFTER 10 MIN. AT 8.2 FT
▼ WATER DEPTH 24 HOURS AFTER DRILLING: ---

Drilled By: Soltek Logged By: EE

HVJ Associates, Inc.

COH HG1213270-COH.GPJ 5/5/15

LOG OF BORING B-2

PROJECT: Program Management Office at IAH
LOCATION: N: N/A; E: N/A
STATION: N/A
OFFSET: N/A
SURFACE ELEVATION: N/A

PROJECT NO.: HG1213270
COMPLETION DEPTH: 25 FT
CAVE-IN DEPTH: 9 FT
DATE: 4/15/15

SAMPLER: Shelby Tube/Split Spoon
DRY AUGER: 0 TO 14 FT
WET ROTARY: 14 TO 25 FT

UNDRAINED SHEAR STRENGTH, TSF: ○ HAND PENETROMETER; ● UNCONFINED COMPRESSION; ■ UNCONSOLIDATED-UNDRAINED TRIAXIAL COMPRESSION; △ TORVANE

ELEVATION, FT	DEPTH, FT	SYMBOL	SAMPLES	DESCRIPTION OF MATERIAL	STANDARD PENETRATION TEST, BLOWS PER FOOT	PERCENT PASSING NO. 200 SIEVE	DRY UNIT WEIGHT, PCF	MOISTURE CONTENT, %	LIQUID LIMIT, %	PLASTIC LIMIT, %	PLASTICITY INDEX, %
	0			Pavement: 1.5" Asphaltic Concrete, 8" Cement Stabilized Sand							
				Loose, brown, SILT WITH SAND (ML)	5	68.9		15			
	5			-w/ ferrous stains 4'-10'	6						
					8	68.0					
					7			18			
	10			Firm, reddish brown, SANDY LEAN CLAY (CL)	6			34	42	21	21
				Loose, brown, CLAYEY SAND (SC)	6	12.3					
▽	15			Stiff to very stiff, reddish brown, FAT CLAY (CH), w/ silt and sand seams	9			43	63	33	30
							100	27			
	20										
								27			
	25										

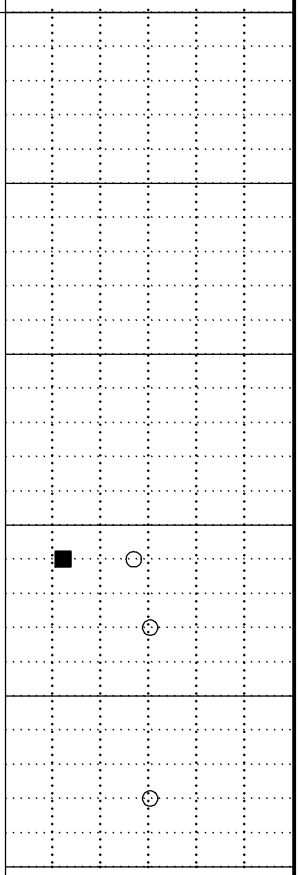

DEPTH TO WATER IN BORING:
▽ FREE WATER DURING DRILLING: 14.0 FT; AFTER 10 MIN. AT 8.2 FT
▼ WATER DEPTH 24 HOURS AFTER DRILLING: ---

Drilled By: Soltek Logged By: EE

HVJ Associates, Inc.

COH HG1213270-COH.GPJ 5/5/15

LOG OF BORING B-3

PROJECT: Program Management Office at IAH
LOCATION: N: N/A; E: N/A
STATION: N/A
OFFSET: N/A
SURFACE ELEVATION: N/A

PROJECT NO.: HG1213270
COMPLETION DEPTH: 40 FT
CAVE-IN DEPTH: 8.5 FT
DATE: 4/15/15

SAMPLER: Shelby Tube/Split Spoon
DRY AUGER: 0 TO 12 FT
WET ROTARY: 12 TO 40 FT

UNDRAINED SHEAR STRENGTH, TSF: ○ HAND PENETROMETER; ● UNCONFINED COMPRESSION; ■ UNCONSOLIDATED-UNDRAINED TRIAXIAL COMPRESSION; △ TORVANE (0.5, 1.0, 1.5, 2.0, 2.5)

ELEVATION, FT	DEPTH, FT	DESCRIPTION OF MATERIAL	STANDARD PENETRATION TEST, BLOWS PER FOOT	PERCENT PASSING NO. 200 SIEVE	DRY UNIT WEIGHT, PCF	MOISTURE CONTENT, %	LIQUID LIMIT, %	PLASTIC LIMIT, %	PLASTICITY INDEX, %
	0	8" Cement Stabilized Sand							
		Loose to medium dense, brown, SILT WITH SAND (ML)	13	67.9		16			
	5		9						
			11	61.8					
		-w/ clay seams 8'-10'	5			18			
	10								
▽		Loose to medium dense, brown, SAND WITH SILT (SP-SM)	9						
			23	8.7		23			
	15	Firm to very stiff, gray and reddish brown, FAT CLAY (CH)	6			32	76	37	39
		-w/ sandstone and sand seams 16'-35'			106	23			
	20				104	24			
	25								
						22			
	30								
				95.2					
	35								
						28			
	40								

DEPTH TO WATER IN BORING:
▽ FREE WATER DURING DRILLING: 11.0 FT; AFTER 10 MIN. AT 8.5 FT
▼ WATER DEPTH 24 HOURS AFTER DRILLING: ---

Drilled By: Soltek Logged By: EE

HVJ Associates, Inc.

COH HG1213270-COH.GPJ 5/5/15

LOG OF BORING B-4

PROJECT: Program Management Office at IAH
LOCATION: N: N/A; E: N/A
STATION: N/A
OFFSET: N/A
SURFACE ELEVATION: N/A

PROJECT NO.: HG1213270
COMPLETION DEPTH: 40 FT
DATE: 4/13/15

SAMPLER: Shelby Tube/Split Spoon
DRY AUGER: 0 TO 14 FT
WET ROTARY: 14 TO 40 FT

ELEVATION, FT	DEPTH, FT	DESCRIPTION OF MATERIAL	STANDARD PENETRATION TEST, BLOWS PER FOOT	PERCENT PASSING NO. 200 SIEVE	DRY UNIT WEIGHT, PCF	MOISTURE CONTENT, %	LIQUID LIMIT, %	PLASTIC LIMIT, %	PLASTICITY INDEX, %
	0	Pavement: 1" Asphaltic Concrete, 11" Sand		76.3		13			
		Loose to medium dense, brown, SILT WITH SAND (ML)	6						
	5		11						
			10	71.0					
		-w/ ferrous nodules 8'-10'	9						
	10	Firm, reddish brown, SANDY LEAN CLAY (CL)	5	68.8		22	42	18	24
		Medium dense, brown, CLAYEY SAND (SC)	13	14.4					
	15	Very stiff, gray and reddish brown, FAT CLAY (CH)		100.0		42	77	37	40
					99	26			
	20								
						26			
	25								
					107	22			
	30								
		Firm to stiff, brown to gray and reddish brown, SILTY CLAY WITH SAND (CL-ML)		79.8			24	19	5
	35								
					101	24			
	40								

UNDRAINED SHEAR STRENGTH, TSF
○ HAND PENETROMETER
● UNCONFINED COMPRESSION
■ UNCONSOLIDATED-UNDRAINED TRIAXIAL COMPRESSION
△ TORVANE
0.5 1.0 1.5 2.0 2.5

DEPTH TO WATER IN BORING:
▽ FREE WATER DURING DRILLING: 12.0 FT; AFTER 10 MIN. AT 8.1 FT
▼ WATER DEPTH 24 HOURS AFTER DRILLING: ---

Drilled By: Soltek Logged By: EE

HVJ Associates, Inc.

COH HG1213270-COH.GPJ 5/5/15

LOG OF BORING B-5

PROJECT: Program Management Office at IAH
LOCATION: N: N/A; E: N/A
STATION: N/A
OFFSET: N/A
SURFACE ELEVATION: N/A

PROJECT NO.: HG1213270
COMPLETION DEPTH: 40 FT
CAVE-IN DEPTH: 9.2 FT
DATE: 4/13/15

SAMPLER: Shelby Tube/Split Spoon
DRY AUGER: 0 TO 14 FT
WET ROTARY: 14 TO 40 FT

UNDRAINED SHEAR STRENGTH, TSF
○ HAND PENETROMETER
● UNCONFINED COMPRESSION
■ UNCONSOLIDATED-UNDRAINED TRIAXIAL COMPRESSION
△ TORVANE
0.5 1.0 1.5 2.0 2.5

ELEVATION, FT	DEPTH, FT	DESCRIPTION OF MATERIAL	STANDARD PENETRATION TEST, BLOWS PER FOOT	PERCENT PASSING NO. 200 SIEVE	DRY UNIT WEIGHT, PCF	MOISTURE CONTENT, %	LIQUID LIMIT, %	PLASTIC LIMIT, %	PLASTICITY INDEX, %
	0	Pavement: 1.5" Asphaltic Concrete							
		Loose to medium dense, brown, SILT WITH SAND (ML)	6	66.9		12			
	5		7						
			13	73.5		16			
	10	-w/ ferrous nodules 10'-12'	9						
			16			20			
▽	15		20						
		Stiff to very stiff, gray and reddish brown, FAT CLAY (CH)	11	99.1		30	62	31	31
					96	30			
	20								
				100.0	94	27	57	29	28
	25								
						24			
	30								
		-w/ sand seams 33'-40'			111	21			
	35								
						22			
	40								

DEPTH TO WATER IN BORING:
▽ FREE WATER DURING DRILLING: 14.0 FT; AFTER 10 MIN. AT 9.0 FT
▼ WATER DEPTH 24 HOURS AFTER DRILLING: ---

Drilled By: Soltek Logged By: EE

HVJ Associates, Inc.

COH HG1213270-COH.GPJ 5/5/15

LOG OF BORING CB-1

PROJECT: Program Management Office at IAH
LOCATION: N: N/A; E: N/A
STATION: N/A
OFFSET: N/A
SURFACE ELEVATION: N/A

PROJECT NO.: HG1213270
COMPLETION DEPTH: 5 FT
DATE: 4/15/15

SAMPLER: Shelby Tube/Split Spoon
DRY AUGER: 0 TO 5 FT
WET ROTARY: TO FT

UNDRAINED SHEAR STRENGTH, TSF
○ HAND PENETROMETER
● UNCONFINED COMPRESSION
■ UNCONSOLIDATED-UNDRAINED TRIAXIAL COMPRESSION
△ TORVANE
0.5 1.0 1.5 2.0 2.5

ELEVATION, FT	DEPTH, FT	SYMBOL	SAMPLES	DESCRIPTION OF MATERIAL	STANDARD PENETRATION TEST, BLOWS PER FOOT	PERCENT PASSING NO. 200 SIEVE	DRY UNIT WEIGHT, PCF	MOISTURE CONTENT, %	LIQUID LIMIT, %	PLASTIC LIMIT, %	PLASTICITY INDEX, %
	0			Loose to medium dense, brown, SILT WITH SAND (ML)		65.7		11			
					6			13			
					11	68.7					
	5										

DEPTH TO WATER IN BORING:
FREE WATER DURING DRILLING: ---
WATER DEPTH 24 HOURS AFTER DRILLING: ---

Drilled By: Soltek Logged By: EE

HVJ Associates, Inc.

COH HG1213270-COH.GPJ 5/5/15

LOG OF BORING CB-2

PROJECT: Program Management Office at IAH
LOCATION: N: N/A; E: N/A
STATION: N/A
OFFSET: N/A
SURFACE ELEVATION: N/A

PROJECT NO.: HG1213270
COMPLETION DEPTH: 5 FT
DATE: 4/15/15

SAMPLER: Shelby Tube/Split Spoon
DRY AUGER: 0 TO 5 FT
WET ROTARY: TO FT

UNDRAINED SHEAR STRENGTH, TSF
○ HAND PENETROMETER
● UNCONFINED COMPRESSION
■ UNCONSOLIDATED-UNDRAINED TRIAXIAL COMPRESSION
△ TORVANE
0.5 1.0 1.5 2.0 2.5

ELEVATION, FT	DEPTH, FT	SYMBOL	SAMPLES	DESCRIPTION OF MATERIAL	STANDARD PENETRATION TEST, BLOWS PER FOOT	PERCENT PASSING NO. 200 SIEVE	DRY UNIT WEIGHT, PCF	MOISTURE CONTENT, %	LIQUID LIMIT, %	PLASTIC LIMIT, %	PLASTICITY INDEX, %
	0			Pavement: 2.5" Asphaltic Concrete, 7" Cement Stabilized Sand							
				Loose, brown, SILT WITH SAND (ML)	4	70.2		14			
					6			16			
	5										

DEPTH TO WATER IN BORING:
FREE WATER DURING DRILLING: ---
WATER DEPTH 24 HOURS AFTER DRILLING: ---

Drilled By: Soltek Logged By: EE

HVJ Associates, Inc.

COH HG1213270-COH.GPJ 5/5/15

LOG OF BORING CB-3

PROJECT: Program Management Office at IAH
LOCATION: N: N/A; E: N/A
STATION: N/A
OFFSET: N/A
SURFACE ELEVATION: N/A

PROJECT NO.: HG1213270
COMPLETION DEPTH: 5 FT
DATE: 4/15/15

SAMPLER: Shelby Tube/Split Spoon
DRY AUGER: 0 TO 5 FT
WET ROTARY: TO FT

UNDRAINED SHEAR STRENGTH, TSF
○ HAND PENETROMETER
● UNCONFINED COMPRESSION
■ UNCONSOLIDATED-UNDRAINED TRIAXIAL COMPRESSION
△ TORVANE
0.5 1.0 1.5 2.0 2.5

ELEVATION, FT	DEPTH, FT	SYMBOL	SAMPLES	DESCRIPTION OF MATERIAL	STANDARD PENETRATION TEST, BLOWS PER FOOT	PERCENT PASSING NO. 200 SIEVE	DRY UNIT WEIGHT, PCF	MOISTURE CONTENT, %	LIQUID LIMIT, %	PLASTIC LIMIT, %	PLASTICITY INDEX, %
	0			Pavement: 1" Asphaltic Concrete, 8" Sand		63.7		13			
				Loose, brown, SILT WITH SAND (ML), w/ clay pockets	3						
	5			Firm, brown, LEAN CLAY WITH SAND (CL)	7	71.3		17	28	16	12

DEPTH TO WATER IN BORING:
FREE WATER DURING DRILLING: ---
WATER DEPTH 24 HOURS AFTER DRILLING: ---

Drilled By: Soltek Logged By: EE

HVJ Associates, Inc.

COH HG1213270-COH.GPJ 5/5/15

APPENDIX B

SUMMARY OF LABORATORY TEST RESULTS

Project: PMO at IAH
Location: Houston, Texas
Number: HG1213270

Borehole	Depth	Liquid Limit	Plastic Limit	Plasticity Index	% Pass #200 Sieve	Moisture Content (%)	Dry Unit Weight (pcf)	Shear Strength (UU) (tsf)	Shear Strength (Pocket Pen) (tsf)
B-1	0								
B-1	2				60.6	14			
B-1	4								
B-1	6				60.1				
B-1	8					18			
B-1	10								
B-1	12				8.3	24			
B-1	14								
B-1	16	62	30	32	99.7	28	101	1.3	1.5
B-1	18								1.5
B-1	23					27			1.5
B-2	0								
B-2	2				68.9	15			
B-2	4								
B-2	6				68				
B-2	8					18			
B-2	10	42	21	21		34			
B-2	12				12.3				
B-2	14	63	33	30		43			
B-2	16					27	100	0.6	1.3
B-2	18								1.5
B-2	23					27			1.5
B-3	0								
B-3	2				67.9	16			
B-3	4								
B-3	6				61.8				
B-3	8					18			
B-3	10								
B-3	12				8.7	23			
B-3	14	76	37	39		32			
B-3	16					23	106	1.1	1.5
B-3	18								1.5
B-3	20					24	104	0.9	1.5
B-3	29					22			1.5
B-3	34				95.2				
B-3	39					28			1.3
B-4	0.5								
B-4	1.5				76.3	13			
B-4	3								
B-4	5								
B-4	7				71				
B-4	9								
B-4	11	42	18	24	68.8	22			

Project: PMO at IAH
Location: Houston, Texas
Number: HG1213270

Borehole	Depth	Liquid Limit	Plastic Limit	Plasticity Index	% Pass #200 Sieve	Moisture Content (%)	Dry Unit Weight (pcf)	Shear Strength (UU) (tsf)	Shear Strength (Pocket Pen) (tsf)
B-4	13								
B-4	15				14.4				
B-4	17	77	37	40	100	42			1.3
B-4	19					26	99	0.6	1.3
B-4	23					26			1.3
B-4	29					22	107	1.4	1.3
B-4	34	24	19	5	79.8				0.2
B-4	39					24	101	1	0.7
B-5	1								
B-5	3				66.9	12			
B-5	5								
B-5	7								
B-5	9				73.5	16			
B-5	11								
B-5	13					20			
B-5	15								
B-5	17	62	31	31	99.1	30			
B-5	19					30	96	1.3	1.3
B-5	24	57	29	28	100	27	94	0.9	1.3
B-5	29					24			1.5
B-5	34					21	111	2	1.5
B-5	39					22			1.5
CB-1	1				65.7	11			
CB-1	3.8					13			
CB-1	4.3				68.7				
CB-2	0.5								
CB-2	1.5								
CB-2	2.8				70.2	14			
CB-2	4.3					16			
CB-3	0.5								
CB-3	1.5				63.7	13			
CB-3	2.8								
CB-3	4.3	28	16	12	71.3	17			
Total		**10**	**10**	**10**	**26**	**41**	**10**	**10**	**22**

APPENDIX C

DRILLED SHAFT CAPACITY CURVES

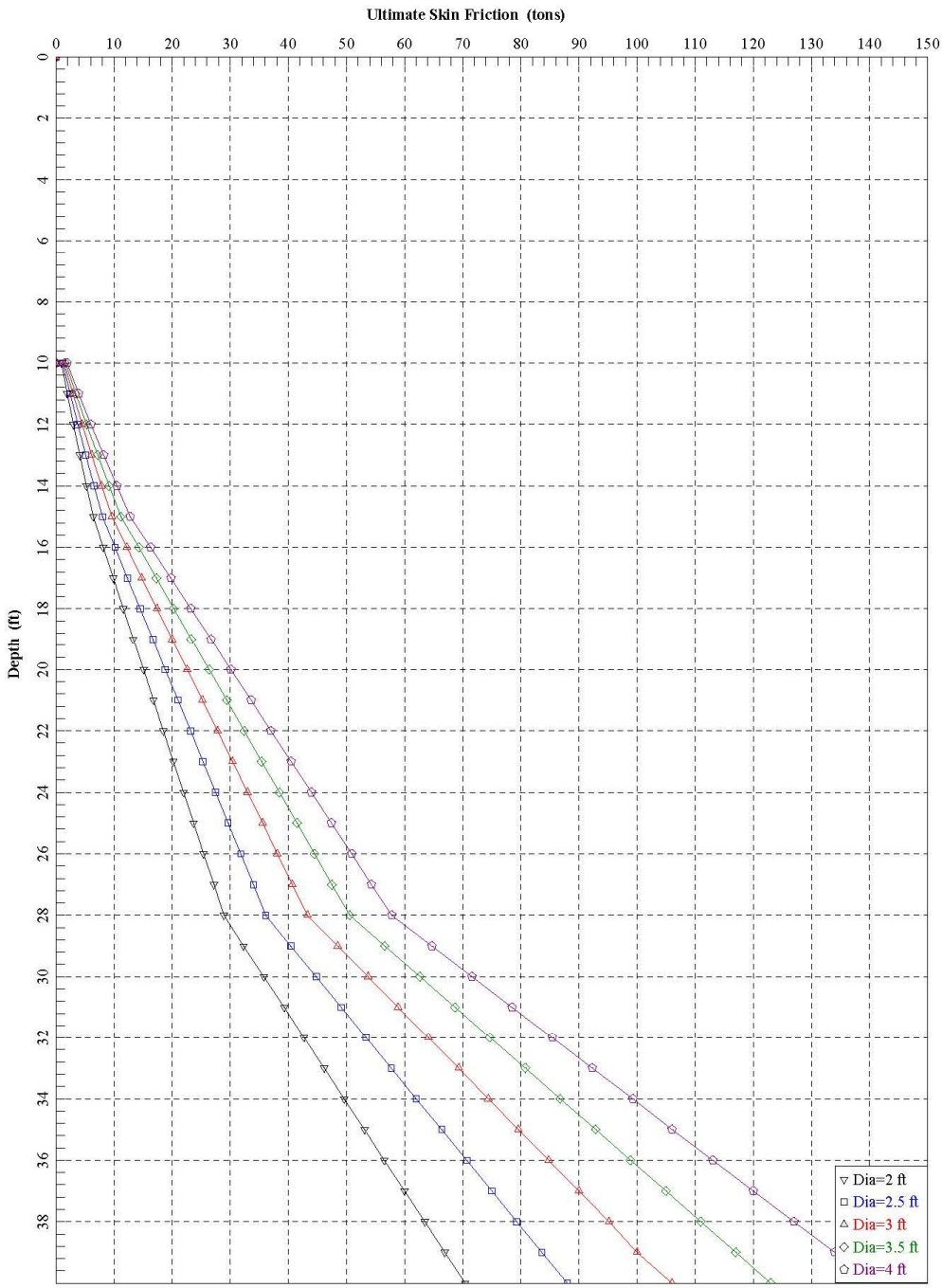

HVJ ASSOCIATES

6120 S. Dairy Ashford Road
Houston, Texas 77072-1010
281.933.7388 Ph
281.933.7293 Fax

DATE: 5/4/2015	APPROVED BY: SV	PREPARED BY: FD

ULTIMATE SKIN FRICTION
PMO at IAH

PROJECT NO.: HG1213270	DRAWING NO.: PLATE C-1

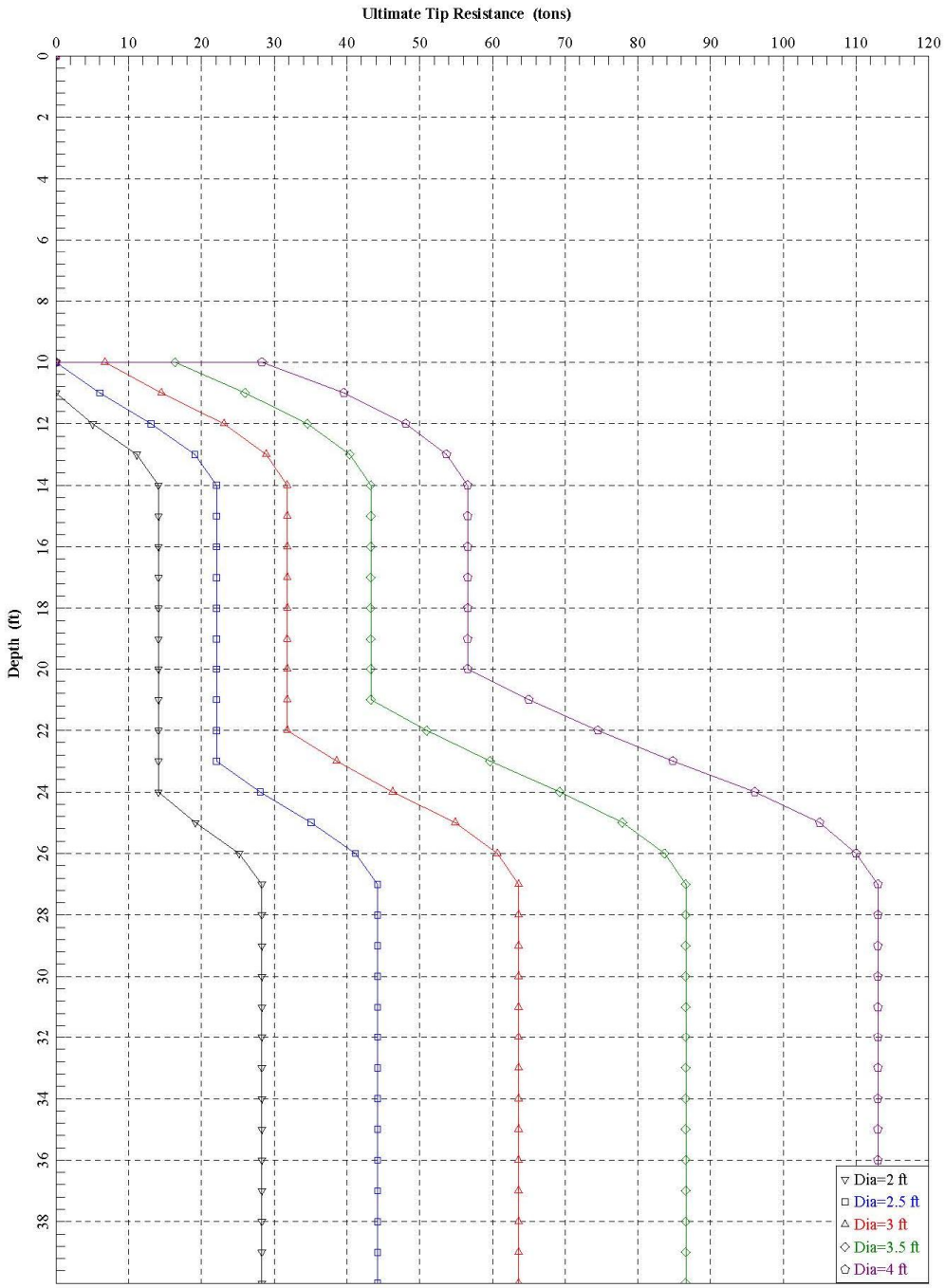

HVJ ASSOCIATES
6120 S. Dairy Ashford Road
Houston, Texas 77072-1010
281.933.7388 Ph
281.933.7293 Fax

DATE: 5/4/2015	APPROVED BY: SV	PREPARED BY: FD

ULTIMATE TIP RESISTANCE
PMO at IAH

PROJECT NO.: HG1213270	DRAWING NO.: PLATE C-2

Global Buildings
5985 Rogerdale Road
Houston, Texas 77072
Ph. 281-776-2500
Fax 281-776-2501

City of Houston - Department of Aviation - Planning Design and Construction Division

BASIS OF DESIGN NARRATIVE

HAS ITRP PROGRAM MANAGEMENT OFFICE

PROJECT No.: PN 715 B

Issued: August 4, 2015

Consultants:

Jacobs Architect	Jones Engineering MEP/Fire Engineering	Henderson + Rogers, Inc. Structural Engineering	4B Technology Telecom/Data/Security	Isani Consultants Civil Engineering

I. Introduction

The Houston Airport System (HAS) has identified a significant need for the development of additional facilities at George Bush Intercontinental Airport (IAH) to handle aircraft, passengers, and cargo departing to, and arriving from, domestic and international destinations on scheduled and chartered flights. To support the airlines growth plans in Houston, the HAS and airlines will complete a major capital improvement plan that will include constructing Terminal B North Phase II (as defined in the Second Amended and Restated Special Facilities Lease Agreement, dated August 10, 2011) and reconstruct and integrate Terminal C North and Terminal D into a new single common-use international facility. The expansion of the terminal facilities may necessitate an expansion of certain components of the existing Federal Inspection Services facility (the "FIS Expansion"). Additionally, the improvement plan will include several enabling projects to serve the newly constructed facilities.

To improve Program management efficiency and the interaction between HAS staff, stakeholder representatives, the Executive Program Management Team and the multiple consultant and contractor organizations, HAS is considering the construction of a centralized Program Management Office (PMO). The PMO as defined will provide a centralized facility for all designated HAS staff members, designated stakeholder representatives, the Executive Program Management Team's key staff members, United Airlines staff, and principal consultant / contractor staff members. In addition, the PMO will provide adequate conference and training facilities to support the ITRP and a consolidated location for all ITRP-related document control, records management, reproduction, and CAD/GIS functions.

The PMO address will be 115 Standifer. The existing one story warehouse building (Approx. 50,000 gross s.f.) with employee and visitor parking areas located on the north and south sides of the existing warehouse with the address 110 Standifer. This warehouse will be demolished in advance of the Design/Build team commencing construction and is not part of the project scope. There are two buildings that are directly toward the west of the new PMO site (between the existing warehouse and Lee Road), which are used as office space for various entities. The building toward the north is to be removed and is not part of the project scope. The Program Scope includes constructing the proposed Program Management Office building (42,960 gross s.f.) and constructing a new concrete parking area and drives for 201 vehicles.

II. Architectural Design

Building

The PMO is a single-story, 42,960 gross s.f. office building that will be composed mostly of tilt-up concrete wall panels on the exterior. The tilt-wall panels are 18'-0" tall by 6-1/4" thick and resting on a 6" thick concrete slab on grade. The concrete walls will be painted (two colors) and accented with a form liner 3/4" deep corrugated pattern and pierced by a string of vertical windows throughout. The main entry is emphasized by a glazed curtain wall system and a 1,430 sq. ft. extruded aluminum covered entry canopy. Also adjacent to the entry is an accent material, an alternating color pattern of 3" deep concealed fastener metal panels. Another key design feature that is implemented to provide occupants with natural daylight into centralized

areas is a series of clerestory windows that occur at raised roof elements. These clerestory windows will allow the interior environment to have an added connectivity to the exterior environment, all while receiving additional daylight.

Interior

The majority of the interior collaborative space is (144) open workstations. This open workstation area consists of app. 16,800 s.f. of floor space. The workstation environment will be open and will have ample natural daylight. The daylight can be controlled by manual chain driven Mechoshades, occurring at every exterior perimeter window and motorized Mechoshades for those hard to reach higher clerestory windows. The open environment will be enhanced by having exposed structural bar joists and metal deck structure, both of which will be painted white. Assisting employees and visitors alike with the acoustics in this area, there will be a series of suspended acoustical ceiling blades. There will also be enclosed offices for HAS/ITRP and United Airlines staff located within the PMO.

Interior design will include:

1. (14) Hard walled offices
2. (120) 8'x8' workstations
3. (1) Main entry reception/waiting area
4. (1) Entry Vestibule
5. (1) 180 person "Big Room" meeting area (that can be divided into two smaller rooms with a motorized wall)
6. (2) 10 person conference rooms
7. (2) 8 person conference rooms
8. (1) war room for 28 plus persons
9. (1) war storage room
10. (1) mail room
11. (10) Huddle areas
12. (1) break room for 25-30 persons
13. (1) coffee/vending areas
14. (1) print stations
15. (1) Document control room
16. (3) Copy /Work rooms
17. (15) Storage and File cabinets
18. (2) Men's + Women's Restrooms per Code
19. (1) building storage/supply rooms
20. (1) Janitor's closet
21. (1) Fire riser closet
22. (1) Mechanical room
23. (1) Main electrical room
24. (1) Electrical support closet
25. (1) MDF room

United spaces will include:

1. (5) Hard walled offices
2. (16) 6'x6' and (8) 6'x12' workstations
3. (1) 8 person conference room
4. (1) storage/file/ print room
6. (1) IDF server room

7. (1) reception area

Site

The 4.25 acre site will be fully enclosed with a 7 ft. (black epoxy clad) tall chain link fence and will have two vehicular entrance/exit gate locations. The vehicular gates will be motorized, one of which will serve as an "after hours" point of access with a call box/key pad/card reader. Each vehicular gate will have (1) CCTV- video surveillance security camera. The site will be well illuminated (with an average over 3 footcandles) with (14) LED area parking fixtures on 25 ft. tall poles. Also located near the front entry will be (3) 25 ft. tall flagpoles.

Site design will include:

1. (1) 1,300 SF Outdoor Courtyard with pavers + landscaping
2. (1) exterior loading area for two delivery vehicles
3. (201) paved parking spaces with 26 ft. drive isles
4. (1) CMU Trash Enclosure with metal door at NE corner
5. (1) Transformer enclosure at NE corner
6. (1) Generator at NE corner

a. Current Applicable Codes (as of April 2015):
   i. The International Building Code, (IBC) 2006 edition as amended by the City of Houston
   ii. The Uniform Mechanical Code, (UMC) 2006 edition as amended by the City of Houston
   iii. The Uniform Plumbing Code, (UPC) 2006 edition as amended by the City of Houston
   iv. The National Electrical Code, (NEC) 2014 edition
   v. The International Energy Conservation Code, (IECC) 2009 edition as amended by the City of Houston
   vi. The International Fire Code, (IFC) 2006 edition as amended by the City of Houston
   vii. Americans with Disabilities Act Accessibility Guidelines
   viii. Texas Accessibility Standards 2010 (TAS)

b. Expected Applicable Code updates by June 2015
   i. The International Building Code, (IBC) 2012 edition as amended by the City of Houston
   ii. The Uniform Mechanical Code, (UMC) 2012 edition as amended by the City of Houston
   iii. The Uniform Plumbing Code, (UPC) 2012 edition as amended by the City of Houston

c. Design Criteria
   i. Occupancy Type (304): B Office (38,135 sf.) & A-3 Assembly (4,825 sf.)
   ii. Occupancy Category (T1604.5): II
   iii. Construction Type (602): IIB
   iv. Fire resistance ratings:
      1. Structural Frame: 0 hrs.
      2. Bearing Walls: 0 hrs.
      3. Nonbearing walls: 0 hrs.
      4. Floor construction: 0 hrs.
      5. Roof construction: 0 hrs.
   v. Fire Separation Between Types B & A-3: 1 hr.
   vi. Sprinkler System Exception: Approved automatic sprinkler system in compliance with Section 903.3.1.1 shall be substituted for 1-hour reduction

vii. Allowable Area (503): Unlimited s.f.
viii. Allowable Height (503): 3 Stories
ix. Actual Area: 42,960 gross s.f.
x. Actual Height: 1 Story
xi. Max. Exit Distance Allowed: 250 ft.
xii. Max. Exit Distance Provided: 212 ft.
xiii. Minimum # of Exits Required: 2 office, 4 assembly
xiv. Number of Exits Provided: 5 office, 5 assembly
xv. Occupant Load Factor: 1/100 s.f. for 38,135sf. (382) & 1/15 s.f. for 4,825sf. (322)
xvi. Calculated Occupant Load: 704
xvii. Fire Protection:
    1. Portable Fire Extinguishers, Class A, 75 feet maximum travel distance
xviii. Interior Finishes (803.5):
    1. Exit Enclosures and Passageways: B
    2. Corridors: C
    3. Rooms and enclosed spaces: C
xix. Building Insulation:
    1. Roof – R38
    2. Walls – R19
xx. Finishes (See sheets A-602 & A-603 room finishes)
    1. Ceilings:
        a. 2x2 acoustical lay-in tile
            i. Offices
            ii. Conference Rooms
            iii. Work Room
            iv. War Room
            v. War Storage
            vi. Corridors at front & Office Area 1
            vii. Meeting Rooms
            viii. Mail Room
            ix. Document Control
            x. Copy Rooms
        b. Painted Gypsum Board
            i. Entry Vestibule
            ii. Reception
            iii. Perimeter of Big Room
            iv. Restrooms
            v. Recessed Counters
        c. 22” x 94” suspended acoustical blades
            i. Cubicle/Workstation areas
        d. 3’-10” x 3’-3” hexagonal acoustical ceiling clouds
            i. Big Room
        e. Painted Exposed Structure
            i. Throughout building and where no other ceiling finish is indicated in the RCP

    2. Flooring:

a. 24x48 Porcelain Tile
    i. Entry Vestibule
    ii. Reception
b. High Traffic Carpet Planks (25cm x 1m)in Herringbone Pattern
    i. Cubicle/Bullpen/Workstation areas
    ii. Offices
    iii. War Room
    iv. Big Room
    v. Conference rooms
    vi. Copy Rooms
    vii. Work Room
    viii. Huddle Areas
    ix. Inner Corridors
c. Porcelain Tile (with 12” base)
    i. Restrooms

d. LVT- Luxury Vinyl Tile (24x24)
    i. Main Egress Corridors
    ii. Mail Room
    iii. Document Control Room
    iv. Break Room
    v. Coffee Bar
    vi. High traffic pathways
e. Concrete Floor
    i. Throughout building under floor finishes and where no other floor finish is indicated on the Floor Finish Plan
    ii. Storage Rooms
f. Brick Pavers (3”w x 18” l x 3.125” h)
    i. Outdoor Courtyard

3. Walls:
    a. Painted Gypsum Board
        i. General, throughout
        ii. Accent walls at select locations
    b. Ceramic Tile
        i. Restroom wet walls
    c. Fabric Acoustical Panels
        i. Large meeting room
4. Specialties:
    a. Acoustical and fabric wrapped Motorized Partition
        i. Big Room
    b. 3D wall panel
        i. Lobby, behind receptionist
5. Roofing:
    a. Single-Ply membrane (fully adhered) 60mil PVC

III. Structural Design

The following information will serve as an outline of the proposed structural systems and the structural design criteria that will be used for this project.

a. Applicable Codes
   i. Current Building Code: 2006 International Building Code, with City of Houston Amendments
   ii. Expected Building Code as of June 2015: 2012 International Building Code, with City of Houston Amendments

b. Design Code:
   i. ACI 318-05
   ii. ASCE 7-05

c. Design Loads
   i. Live Loads:
      1. Roof: 20 psf (not reducible)
   ii. Superimposed Dead Loads:
      1. MEP Systems 8 psf
      2. Ceiling and Miscellaneous 4 psf
      3. Sprinkler Piping 3 psf
   iii. Wind Design Criteria:
      1. Basic Wind Speed (V) 110 mph (3-second gust wind speed)
      2. Wind Importance Factor (Iw) 1.00
      3. Building Category II
      4. Wind Exposure C
      5. Internal Pressure Coefficient (Enclosed Building) +/- 0.18
   iv. Seismic Design Criteria:
      1. Based on Seismic Design Category A
   v. Snow Load: Ground snow load, Pg is 5 psf or less.

d. Structural Systems for the new HAS PMO
   i. Foundations
      1. The building foundation design will be based on recommendations provided in geotechnical study prepared by HVJ Associates. A draft copy of the report, dated May 5, indicates the top seven feet of soils at the site consist of sands and silts. The estimated potential vertical rise (PVR) is less than 1-inch therefore select fill will only be needed to raise the grade to the desired finish floor elevation and to fill in any areas disturbed by the removal of the existing building foundation. Select fill, where used, will consist of lean silty or sandy clay with a Liquid Limit less than 40 and a Plasticity Index (PI) from 8 to 20. Fill material will be placed in loose lifts not exceeding eight inches and compacted to 95% of the maximum dry density at a moisture content 3% dry of optimum as determined by ASTM D 698-91.
      2. Foundations for columns and wall loads will be straight shaft piers bearing approximately 28 feet below existing grade. Shaft size will vary (depending on the load), from 24-inch to 48-inch in diameter.

3. The floor slab will be 6” thick, reinforced with #4 bars at 12” on center, each way. The concrete slab will be underlain by a 15-mil vapor barrier and 1” (max) leveling bed of sand. Select structural fill will be required to replace unsuitable soils and to raise the building pad to the desired elevation. Control joints in the slab on grade will be spaced at 15 feet maximum in each direction. A 4-foot wide pour strip will be provided along the perimeter to allow for installation of the tilt wall panels.

ii. Roof Structure:
    1. The roof deck will be rigid insulation board on galvanized Type B (wide rib) steel roof deck. The deck will be 22-gage galvanized cold formed steel 1-½” deep, which will be used for continuous spans up to 6’-0”. The deck will be supported by steel bar joists and wide flange beams and joist girders. Roof joists will typically be spaced at 5 to 6 feet on center. Steel wide flange or HSS columns and perimeter concrete wall panels or “tilt walls” will transfer roof loads to the foundation. Mechanical equipment (packaged DX units and exhaust fans) will be supported on roof beams or KCS series joists. Angles will be used to frame all openings 12” square or greater.

iii. Lateral Load-Resisting System:
    1. Site cast walls or “tilt-wall” panels will act as shear walls, providing lateral resistance to wind loads. Additional steel chevron type bracing will be required in 3 or 4 locations at exterior walls in the high roof areas.

iv. Structural Steel Estimate:
    1. The weight of the structural frame is estimated to be 9 psf for the roof structure. The structural steel weight includes miscellaneous steel such as bent plates, gusset plates, mechanical opening frames and connection material. The estimated weight does not include the steel deck or steel braces.

v. Concrete Tilt walls for Exterior:
    1. The majority of the concrete tilt-wall panels will be 18 feet tall, which includes a 3-foot high parapet. These walls will be 6-1/4 inches thick and be reinforced with a mat of #4 vertical bars at 12” on center and #4 horizontal bars spaced at 15-inches on center. Additional #5 and #6 bars will be placed in tilt wall panels at panel legs, each side and corner of openings, and other areas requiring additional reinforcement.

e. Outline Specification / Structural General Notes
    i. Reinforcement
        1. Reinforcing Bars: ASTM A615, Grade 60.
        2. Welded Wire Fabric (WWF): ASTM A185, 8-inch minimum side laps.

    ii. Cast-in-place Concrete
        1. Minimum 28-day Compressive Strength (f’c) of Concrete
            a. Normal Weight Structural Concrete:
                i. Foundations: 3,500 psi
                ii. Slabs-on-Grade: 3,500 psi
                iii. Tilt Wall Panels: 4,000 psi

    iii. Structural Steel

1. Steel Shapes:
    a. W-Shapes: ASTM A992
    b. Angles, Channels and Plates: ASTM A36
    c. Square/Rectangular Hollow Structural Sections (HSS): ASTM A500, Grade B
    d. Round Hollow Structural Sections: ASTM A501 or ASTM A53, Grade B
2. Structural steel exposed to weather shall be galvanized.
3. Special welding procedures will be required for full-penetration moment connections. Weld inspection by ultrasonic method will be required.
4. Structural steel shall be fabricated and erected according to the AISC "Specification for Structural Steel Buildings – Allowable Stress Design" and the AISC "Code of Standard Practice for Steel Buildings and Bridges".

IV. Telecom/Data Design

a. General
    i. Technology and Security related planning and installation should comply with Houston Airport System publish guidelines and standards. The documents are available for download at http://www.fly2houston.com/TIP

    ii. In general, Houston Airport Design guidelines require that design/build firms:

        1. Have verifiable airport design and installation experience (5+ years)
        2. Have IT design drawings stamped by an on-staff Registered Communication Distribution Designer.
        3. Have Security Design drawings designed by a State of Texas Licensed Security Consultant.
        4. Have installation staff certified in install and warranty CommScope and Honeywell installations per HAS Technology Guidelines.

b. Data Communications
    i. The single story building is planned to have a single centrally located telecommunications room (MDF) serving the building. This MDF will connect to the campus network via a new telecommunications duct-bank installed by the project from the new PMO to an existing telecom infrastructure consolidation point at the East Vault (EV2). This location near manhole MH0107, is approximately 2,200 feet toward the west across Lee Rd.
    ii. The project will need to be provided with both copper and single-mode fiber optic backbone cable underground from the HAS duct-bank near manhole MH0107 at (EV2) to the PMO's MDF Room.
    iii. The project shall meet Category 6 cabling performance standards. Each Telecommunications Outlet (TCO) shall contain Systimax plenum, Category 6, 4 pair UTP copper cables terminated on Systimax Inteligent Patch Panels. All inserts will be flush-type mounted into conduit and boxes installed in the hollow

wall space or in floor poke-thru devices. Typical outlets will consist of two (2) data Category 6 cables.

iv. In addition to data, WAP, and voice drops, Category 6 cabling will provide network connectivity for Fire Alarm, Building Automation, Audio Visual Equipment, Security Cameras and Access Control Panels, AEDs and other special systems.

v. All cable termination hardware shall be mounted in one of the Contractor provided and installed equipment cabinets. Fiber backbone cabling shall terminate in, fully populated, rack mounted Fiber Panels using LC connectors and adapters.

vi. Horizontal data cabling shall terminate on rack mounted Category 6 48 port intelligent patch panels in the MDF, and on 8P8C 568B Category 6 inserts at the outlet.

vii. Contractor shall provide two (2) Category 6 patch cords per horizontal data cable installed: patch cables 10%=3ft, 45%=5ft, 45%=15ft

viii. Contractor shall provide two (2) duplex fiber optic patch cords per fiber termination; patch cords shall be consistent with fiber type: 3m – 50%, 5m – 50%

ix. Data and equipment (data switches) will be provided by the Project and will be sized to meet the existing needs of the facility with careful consideration of future growth.

c. Wireless Communications

i. Wireless data coverage shall be provided to all interior spaces in the building as well as the exterior courtyard. All Aruba Wireless Access Points (WAPs) should be installed in HAS approved enclosures.

ii. In addition to standard WiFi Coverage, Aruba Beacon technology has been requested at the main building entry and all conference room entry doors. The contractor must work with HAS IT to provide beacon setup and programming.

iii. Typical Wireless Access Points (Project Provided) will be serviced with of two (2) data Category 6 cables terminated into an HAS approved WAP enclosure. A 20ft service loop at the access point end is required for final placement of access point after post coverage surveys. Beacons are powered via USB connectivity from the closest Aruba WAP.

iv. Full Cellular coverage is a requirement for the building. As such, once the building envelope and interior walls are constructed, a Cellular signal survey should be completed to determine whether a cellular and public safety Distributed Antenna System (DAS) is required for the building.

d. Voice Communications

i. Telephones will be Voice over IP devices and considered data equipment, with cabling installation requirements listed above.

ii. The project will provide Multi-pair telephone copper cable from EV2 to the projects Entrance Facility Room (EF), in this case the MDF. This cable shall be terminated on protection blocks.

iii. Copper backbone cabling shall be cross-connected to 24 port intelligent patch panels such that analog line use can be administered by HAS IT.

iv. Voice communications equipment (VoIP telephones and licenses) shall be provided by the Project.

e. PCs and other Equipment
   i. PC equipment (computers, laptops, printer, potters and tablets) will be provided by the Project. Standard users will receive a laptop, docking station, two displays and keyboard/mouse; Power users will receive a high-end desktop computer for use with BIM Software, dual displays, etc.
   ii. Final specifications for PC equipment are currently being developed by HAS IT.

f. Community Antenna Television (CATV)
   i. All coaxial termination of passive and active equipment shall be mounted on wall fields located in the Main Telecom Room (MDF).
   ii. Horizontal Series 6 quad shield coaxial cabling shall terminate with F-Fitting compression connectors into passive wall mounted "TAPS" and on F-Fitting insert at the outlet. All coaxial cables will be installed in conduit from the MDF to the outlet.
   iii. CATV equipment (Fiber-optic Extenders/Converters,TAPS, Amplifiers, Splitters, etc) is provided and installed by the contractor along with the associated "TAPS" values provided after placement to properly balance the system.

g. Communications Supplementary Components
   i. The telecommunications cable distribution system will be run from each outlet above the finished ceiling in conduit transitioning to cable tray, routed to the nearest Telecom Room (MDF/IDF). The maximum allowed distance from the IDF patch panel to the workstation outlet is 295'. Horizontal conduit will connect the station outlet boxes to the nearest appropriate cable pathway. Each outlet will consist of a double gang box with single gang reducer fed by min. (1) 1" conduit with pull strings.
   ii. Conduit shall be minimum 1" EMT, and shall not exceed 100 feet or have more than two 90 degree bends between pull boxes.
   iii. Main Telecom Room (MDF) shall be UPS and generator backed with have two (2) dedicated circuits at the base of the each cabinet. Fourplex isolated ground 120-volt power outlets should be provided at min 6' intervals on each wall with a maximum of two fourplex outlets per circuit. These circuits are to be dedicated to the MDF/IDF and are not allowed to serve any other load.
   iv. Contractor shall provide and install equipment cabinet in the MDF. Cabinets should be properly bonded to the Telecommunications Main Grounding Bus Bar (TMGB).
   v. IDF/MDF walls shall be covered with ¾" A/C plywood, painted on both sides with fire retardant paint.
   vi. MDF/IDF rooms should be appropriately cooled per HAS standards and fire protected such that accidental water sprinkler activation is not possible.
   vii. Min. 18" Ladder Tray shall be installed around the perimeter of the rooms and above the equipment racks as well as vertically adjacent to the riser pathway.
   viii. "STI EZ Path" shall be utilized in high density wiring locations for all fire-stop penetrations.

ix. The distribution pathway for horizontal cabling in corridors from the Telecom Rooms is an 18” x 4” overhead cable tray. Horizontal cabling shall be installed in “conduit” from the point of departing from main cable tray.

h. Audio Visual
   i. Audio-Video Communications
      1. Audio video equipment will be provided in the requested areas. The design will provide the signal conduit and wiring, outlets, raceways and other built-in items that must be installed as the facility is constructed. The project team will develop a design in these areas based on information provided from user input and coordination with owner and design team.
      2. Generally, all conference rooms will be designed to leverage Cisco Unified Communications functionality.
   ii. Room Requirements
      1. Digital Signage and Television Service
         a. Reception and breakroom spaces will receive NEC digital signage displays running on the HAS Standard Infax backend. This will require the installation of a remote computer in the IDF room and coordination with HAS IT staff for programming.
         b. All Displays in the project shall be specified with HDMI inputs and television tuners.
      2. Walled Offices
         a. Walled offices shall be equipped with wall mounted displays connected via HDMI to an input next to the occupant’s desk outlet and the building’s CATV System.
      3. Small Conference/Huddle Rooms
         a. Computer controlled interactive flat screen display system such as the Microsoft Hub or similar product. The interactive display should have both wired and wireless collaborative presentation. Remote collaboration functionality using HAS Standard Cisco unified communications product set is required for all rooms. Standard conference telephone is also required in the space.
      4. Medium Conference Rooms
         a. Computer controlled interactive flat screen display system such as the Microsoft Hub or similar product. The interactive display should have both wired and wireless collaborative presentation and well as Remote collaboration functionality using HAS Standard Cisco/Tandberg unified communications product. Medium Conference Rooms will be with installed overhead speakers and Standard conference telephone with single extension microphone.
      5. Large Conference Rooms
         a. Computer controlled display system including: Laptop computer inputs, flat screen and projector display, overhead speakers and wall controller – video conference capable. System should include echo cancelling audio conferencing DSP with distributed microphones.

b. All large conference rooms should be provided with Cisco/Tandberg video conferencing codecs on initial installation.

6. War Room
    a. Computer controlled display system including: Multiple laptop computer and television inputs, multiple flat screen displays, overhead speakers, wall controller and multi input/output presentation switcher – video conference capable. System should include echo cancelling audio conferencing DSP with distributed microphones.
    b. Min. of two conference rooms should be provided with video conferencing codecs on initial installation.
7. BIG Room
    a. Divisible room with dual input and output functionality controlled by a two zone presentation switcher to allow the room to function as either two separate rooms or one combined room. Multiple laptop computer inputs, multiple overhead projectors and screens, multi zone overhead speakers, wall controller. As furniture is moveable, the room's echo cancelling audio conferencing DSPs should include two wireless microphone receivers to manage flexible use in both open and divided configurations – video conference capable.

i. Electronic Safety and Security

i. Access Control

1. The new facility will be equipped with an access control system managing entry into the building and also controlling access into "high risk" areas within the building as defined by HAS. The intent of the system is to control and monitor access to areas that may contain items and/or information identified as valuable, and to allow access to appropriately authorized personnel only.
2. Access to secured areas will be controlled by the presentation of a credential (security card). The access control and intrusion detection systems have the ability to report back to centralized security monitoring location via the data network.
3. Electronic access control is required at all building entrances, 24 hour gates, IDF/MDFs, mechanical rooms, and other areas defined as secure spaces by HAS. HID Proximity Keypad readers will be required all access control points with additional RFID vehicle readers at the vehicle gates.
4. All cabling for the security access control and panic systems shall be home run to the MDF or IDF on the appropriate floor.
5. Access control doors are fed by security signal cable and require remote power distribution from the MDF/IDF Data Gathering Panels and power supplies. DGP shall be located in a dedicated equipment cabinet in the MDF.
6. Doors secured with access control will be activated by a card reader from the entry side and Request to Exit (REX) from the exit side. Access control cable will terminate in the MDF/IDF, with request and report functions processed at the security monitoring location.

7. The Security Equipment will be located in the MDF/IDF and is designed so that IT and security personnel may access the rooms without disturbing day-to-day operations of the facility. The contractor is responsible for procurement, installation, programming and permitting of all access control hardware, software and licenses.

ii. Electronic Surveillance

1. Cameras for Cameras for the Security IP Surveillance System shall be fixed focus, color digital cameras unless otherwise directed by HAS. The cameras will be cross connected to a project provided network device located in the MDF that transmits image data to a central location for viewing and recording.
2. Cameras will be fed with one Category 6 cable provided as part of the communications contractor's scope of work.
3. Camera views will be closely coordinated with HAS with all access controlled doors, lobbies, parking areas and vehicle gates covered at a minimum.
4. Project will provide all cameras, licenses and video storage and programming required to integrate the new building into the existing HAS Honeywell System.
5. Depending on distance, cabling to gate areas may require the installation of a harden network switch and /or PoE injectors.

V. Mechanical/Electrical/Plumbing Design

a. Applicable Codes

i. The adopted mechanical code is 2006 UMC with City of Houston Amendments.
ii. The adopted plumbing code is the 2006 UPC with City of Houston Amendments.
iii. The new system will be designed to meet the HAS Standards for Design conditions.

b. Expected Applicable Code updates by June 2015

i. 2012 UMC with City of Houston Amendments
ii. 2012 UPC with City of Houston Amendments

c. HVAC

i. Roof Mounted Direct Expansion Packaged Air Conditioners will distribute air of the appropriate temperature to maintain space temperatures at the desired set point. A variable air volume (VAV) system is anticipated to serve the building. The estimated capacity of the required equipment is approximately 107.5 tons. High turn-down gas furnaces will be provided in the roof top units to provide most of the heating. One single duct variable air volume (VAV) terminal unit will be provided for each thermal zone. Each terminal unit will be provided with small electric heaters for zone temperature control. Approximately 60 VAV terminal units will be utilized. The return air will be through a plenum above the ceiling. It will not be ducted.

ii. Outside air will be brought in through the roof mounted units and mixed with the return air. The outside air will meet the City of Houston requirements for ventilation.
iii. The ductwork will be spiral constructed low pressure class sheet metal as per the latest SMACNA Standards. The duct will be internally insulated. The sheetmetal finish will be suitable for exposed installation. The insulation will be 1-1/2" foil faced fiberglass. Flexible duct will connect the diffusers to the sheet metal trunk ducts in areas with ceilings. Diffusers will be hard connected in exposed areas. Diffusers will coordinate with the selected finishes in the space. Linear slot diffusers and square plaque type diffusers will be utilized.
iv. The HVAC controls will be a new stand-alone DDC system utilizing BacNet communication protocol.
v. All systems will be tested and balanced as per AABC standards.

d. Domestic Water System
   i. Connection to City domestic cold water will be provided. A 3" service connection will be required. Hot water for hand washing and other uses will be provided with centrally located electric water heaters.
   ii. The domestic cold water and hot water systems will be installed in insulated type "L" copper piping as per the HAS Standards. The hot water systems will be recirculating type. A small circulating pump will be required for each system.
   iii. Domestic water systems shall be disinfected in accordance with code.

e. Sanitary Waste and Vent Piping
   i. The sanitary waste and vent will be service weight cast-iron and will connect to the underground sewer system outside and adjacent to the space. The sanitary sewer outfall will be 6". Vents will go through the roof. A grease trap may be required for break rooms or food serving areas and will be located in the ground adjacent to the building. Floor drains, floor sinks, cleanouts, fixtures, and other items will be as per HAS requirements.

f. Storm Piping
   i. Roof drains will be required for storm drainage. Overflow drains will be required with 8' of each roof drain. The horizontal drains from the roof and overflow drains will be independent until the pipes turn down vertically. The overflow drain piping and roof drain piping may then be connected into a single pipe. Horizontal storm and overflow drains will be insulated to the point where the drain piping turns down vertically. The storm piping will connect into the underground storm drain outside the building.

g. Natural Gas
   i. A new natural gas meter and service will be required. The meter will be located at ground level below and adjacent to the space. Natural gas service should only be used for Emergency Generator fuel and to supply the roof top air conditioning equipment.
   ii. Natural gas piping will be schedule 40 black steel.

h. Fire Protection

   i. The space will be sprinklered 100% in accordance with NFPA 13 and other applicable codes. Proposed sprinkler head locations will be shown in high finish areas of the space. The sprinkler design will be submitted to the Architect, engineer, and local authorities for approval.
   ii. A new 8" water connection for the fire sprinklers will be required. A vault with the isolation valves, alarm valves, fire department connection, backflow preventer, etc. will be installed in the ground below and adjacent to the space.
   iii. The fire protection piping will be schedule 40 black steel piping. Piping 2" and smaller may be threaded. Piping 2-1/2" and larger will be grooved fittings. Sprinkler heads in finished areas will be concealed. Sprinkler heads in back of house areas will be semi recessed.

i. Electrical System

   i. Service
      1. A new pad mounted transformer located in the NE corner of the site will be provided by Centerpoint, which will provide electrical service to the building. The electrical service is anticipated to come from Lee Road. Overhead wires will cross Lee Road to a terminal pole located on this property. The service conductors will be routed down the pole and to the primary side of the pad mount transformer via underground concrete encased duct bank.
      2. Underground conduit and wire will be routed from the secondary side of transformer to a main 1200 Amp. switchboard located in the building. The electrical service will be 277/480 volt, 3 phase, 4 wire Wye system.
      3. The main switchboard will feed 277/480 volt panel boards, transformers, and 120/208 volt panelboards located in the electrical/mechanical room to provide branch circuit distribution within the space.

   ii. Lighting
      1. Lighting will be as per HAS Standards. Controls will be utilized to manage the lighting. Occupancy sensors will be utilized in small rooms and back of house areas. Lighting power densities and controls will be as per the 2009 IECC with the City of Houston Amendments.
      2. Site lighting will be provided by (14) LED area parking fixtures on 25 ft. poles. The (14) fixtures will consist (3) four headed fixtures and (11) single headed fixtures.
      3. Primary open area lighting at the workstations will be 3.5" wide linear pendant mounted LED fixtures with dimmable capability.
      4. Typical offices will be 2x4 LED fixtures.
      5. An emergency generator will be required for all emergency and egress lighting and IT equipment, this will be located in the NE corner of the site.
      6. All wiring will be copper wiring routed in rigid type conduit.

   iii. Data

1. All data wiring will be in rigid type conduit. All data to be per Houston Airport Standards. Refer to technology description for requirements.

iv. Fire Alarm System
    1. The space will have a new stand-alone addressable fire detection and alarm system installed throughout. Fire alarm detection and annunciation devices will be installed in accordance with NFPA 101, City of Houston, TDLR and any other applicable codes.
    2. All fire alarm will be in rigid type conduit in accordance with Houston Airport System Standards.

VI. Civil

a. General
    i. The project site located at 100 Standifer has an existing one story warehouse building (Approx. 50,000 gross sf) with employee and visitor parking areas located on the north and south sides of the building. This building is to be demolished in advance of the Design/Build team starting construction and is not part of the program scope.
    ii. There are two buildings between the warehouse and Lee Road which are used as office space for various entities. These buildings will remain.
    iii. The Program Scope includes:
        1. Construction of the proposed Project Management Office building (42,960 gross SF).
        2. Modification of the existing parking areas to allow for the addition of the new parking areas.

b. Existing Access: Currently there are a total of two (2) access driveways to the property from Standifer.

c. Proposed Access: The Program Scope is to remove the two (2) existing access driveways on Standifer and provide two (2) accesses on Standifer at slightly different locations. To access the site via Lee Road, the vehicles will turn on Standifer and the site will be located on the north side.

d. Pavements for Fire Truck Lanes, Service Roads, Driveways and Sidewalks
    i. The pavement design and subgrade preparation according to the draft geotechnical report prepared by HVJ Associates, Inc. (HVJ)are as follows:
        1. The surface soils are cohensionless (Loose to Medium Dense Sandy Silt (ML) and Sand with Silt (SP-SM)).
        2. The rigid pavement thicknesses based on estimated level of vehicular traffic are:

Pavement	Thickness, inches	Recommended Subgrade Stabilization, inches
Fire Truck Lane	7	8
Parking Aisles	5	8

3. The pavement subgrade stabilization is cement-fly ash.
4. Pavement reinforcements shall be in accordance with the COH concrete pavements details, with #4 Rebar @ 18" C-C EW, Lap Length of 27".
5. Driveways subject to fire truck traffic shall be the same thickness of the fire truck lane.
6. 4-1/2" thick concrete sidewalks shall meet the COH standard details for sidewalks, with #3 Rebar @18" C-C EW, Lap Length of 18".

e. Detention Requirements
   i. Detention is required for all new construction or redevelopment. Houston Airport System has Regional Detention Program which provides master detention at a central location within its premises. All new developments or redevelopments can then utilize this central location, eliminating the need for site detention.
   ii. If the proposed site is part of regional program, then no site detention is required. If not, then detention requirements depending on the outfall will apply.
   iii. If outfall is to City of Houston Storm (COH) Sewer System, COH requires detention based on increased impervious area (including surface detention area) in the project site and the existing impervious area for which detention has currently not been provided. Detention rate varies from 0.50 to 0.55 Ac-ft/Ac of increased impervious area depending on the location and will be provided in the Storm Availability Letter.
   iv. If outfall is to Harris County Flood Control District (HCFCD) ditch, HCFCD requires detention based on the redevelopment area, irrespective of changes to impervious area. Detention rate is 0.55 Ac-ft/Ac or redevelopment area.
   v. The existing impervious area of the site (including building & parking) is approximately 3.94 Acres. The proposed impervious area of the site (including building, parking & sidewalk) is 3.09 Acres. Since the proposed impervious area is less than existing impervious area, no detention is required.

f. Floodplain
   i. According to FEMA Flood Insurance Rate Map (FIRM) Number 48201C0485M revised on June 9, 2014, the proposed site is within Shaded Zone X as well as Shaded Zone AE. Since the project is located within Shaded Zone X and Shaded Zone AE, the property is located within 100 year floodplain and 500 year floodplain. The 100 year Base Flood Elevation (BFE) is 81.41 feet. The Finished Floor (FF) Elevation of the building should be higher of:
      1. 100-year BFE plus 12-inches
      2. 12-inches above nearest Sanitary Sewer Manhole, which is 81.34'.
   ii. If this is a critical facility, the Finished Floor Elevation should be 12" higher than 500 year BFE.
   iii. Since the project is within 100 year floodplain, no fill is allowed in the project.

iv. The existing FF of the warehouse is 84.00'. Since no fill is allowed in the project, we recommend the FF of the new building to be 83.00', which is at least 12" higher than 100-year BFE as well as nearest Sanitary Sewer Manhole.
v. Conveyance Zone Analysis will be required to ensure that the overland flow is not greatly affected by the proposed improvements.

g. Existing Public Utilities
   i. Water
      1. A 12" water line for fire hydrants and water connections for the warehouse is located along the north side of Standifer. This water line is connected to a 16" water line along the west side of Lee Road. There are two fire hydrants located along the north side of Standifer.
      2. The warehouse has three water connections (2", 8" and 15"). The 8" and 15" connections are tapped from the 12" water line located along the north side of Standifer. The 2" connection is tapped from the 16" water line along the west side of Lee Road.
   ii. Sanitary Sewer
      1. According to survey, the existing warehouse does not appear to have any sanitary sewer connections.
      2. A 15" sanitary sewer is located along Lee Road. A 10" sanitary sewer is located along south side of Standifer.
   iii. Storm Sewer: The site is drained via existing storm sewers within the parking lot to the 36" storm sewer along north side of Standifer with eventual outfall into Garners Bayou located north of the property.

h. Pipelines: One (1) Natural Gas Liquid Pipeline, operated by DCP Midstream and One (1) Non-HVL Liquid Pipeline, operated by Magellan Pipeline Company are located along Lee Road. These pipelines are located within a 60' easement contiguous along east right-of-way of Lee Road.

i. Proposed Public Utilities
   i. Water: Water and Fire lines to the new building should be connected to existing 16" water line along Lee Road. Water and Fire lines to the new building should be connected to existing 16" water line along Lee Road. To accommodate firefighting needs, a 6" new fire line with 6" meter vault & appropriate backflow preventer will be required. One additional fire hydrant is required inside the property so that every corner of the new building is within 500 feet of a fire hydrant.

   ii. Sanitary Sewer
      1. An 8" sanitary service line to the new building should connected to the existing 10" sanitary sewer along Standifer. This 8" sanitary service line will connect to the new building at two locations (4" and 6").
      2. A grease trap will be required along sanitary service line for kitchen.

iii. Storm Sewer: Storm flow from the building will be collected through the new storm sewers along the building. New storm inlets located inside the parking lots and the driveway will collect surface drains. These inlets will connect with the new storm sewer system to convey the flow to the storm sewer line on Standifer.

j. Storm Water Pollution Prevention Plan (SWPP):
   i. Approximately 4 acres of the project area will be disturbed during construction. Since the project includes construction activities more than 1 acre but less than 5 acres, TPDES permitting for Small Construction Activities applies. A storm water pollution prevention plan will be required for the project.

k. Storm Water Quality Management Plan (SWQMP):
   i. Since the change in impervious areas is less than 1 Acre, Storm Water Quality requirements do not apply for the project.

l. Other Design Considerations
   i. Review of National Pipeline Mapping System (NPMS) shows two (2) hazardous liquid pipelines exist along Lee Road. The pipeline depths will be required at critical crossing to design utilities with adequate clearances if any of the new connections cross these pipelines.
   ii. Additionally, these pipelines are located in 60' easement (Texas Pipeline Company) contiguous with right-of-way on Lee Road. Any utility crossing will have to be approved and permitted with the Texas Pipeline Company.
   iii. Water/Wastewater/Stormwater Capacity Reservation Application will be needed. The application has been prepared and submitted to the owner for signatures. Once signatures are obtained, we will submit the capacity reservation application online.

END of BOD

Global Buildings
5985 Rogerdale Road
Houston, Texas 77072
Ph. 281-776-2500
Fax 281-776-2501

HOUSTON AIRPORT SYSTEM

City of Houston - Department of Aviation - Planning Design and Construction Division

HAS ITRP PROGRAM MANAGEMENT OFFICE
PROJECT No.: PN 715 B

PROJECT MANUAL / SPECIFICATIONS
100% BRIDGING DOCUMENTS

Issued: August 4, 2015

Consultants:

Jacobs Architect	Jones Engineering MEP/Fire Engineering	H+R Engineers Structural Engineering	4B Technology Telecom/Data/Security	Isani Consultants Civil Engineering

SECTION **TITLE**

DIVISION 00 – PROCUREMENT AND CONTRACTING REQUIREMENTS
003132 GEOTECHNICAL DATA

DIVISION 01 – GENERAL REQUIREMENT
01 57 23 STORM WATER POLLUTION CONTROL
01 74 19 CONSTRUCTION WASTE MANAGEMENT AND DISPOSAL

DIVISION 03 – CONCRETE
03 30 00 CAST-INPLACE CONCRETE
03 39 00 CONCRETE CURING
03 47 13 TILT-UP CONCRETE

DIVISION 04 – MASONRY
04 20 00 UNIT MASONRY

DIVISION 05 – METALS
05 12 00 STRUCTURAL STEEL FRAMING
05 21 00 STEEL JOIST FRAMING
05 31 00 STEEL DECKING
05 50 00 METAL FABRICATIONS

DIVISION 06 – WOOD, PLASTICS AND COMPOSITES
06 10 53 MISCELLANEOUS ROUGH CARPENTRY
06 16 00 SHEATHING
06 26 14 MINERAL PROFILE PANELING
06 41 16 PLASTIC LAMINATE FACED ARCHITECTURAL CABINETS

DIVISION 07 – THERMAL AND MOISTURE PROTECTION
07 21 00 THERMAL INSULATION
07 27 26 FLUID-APPLIED MEMBRANE AIR BARRIERS
07 46 19 STEEL SIDING AND SOFFITS
07 54 19 POLYVINYL CHLORIDE (PVC) ROOFING
07 62 00 SHEET METAL FLASHING AND TRIM
07 72 00 ROOF ACCESSORIES
07 92 00 JOINT SEALANTS

DIVISION 08 - OPENINGS
08 11 13 HOLLOW METAIL DOORS AND FRAMES
08 12 10 INTERIOR ALUMINUM DOORS, DOOR FRAMES, & OFFICEFRONT FRAMING
08 14 16 FLUSH WOOD DOORS
08 41 13 ALUMINUM-FRAMED ENTRANCES AND STOREFRONTS
08 71 00 DOOR HARDWARE
08 81 00 GLAZING
08 83 00 MIRRORS

SECTION	TITLE
DIVISION 09 - FINISHES	
09 22 16	NON-STRUCTURAL METAL FRAMING
09 29 00	GYPSUM BOARD
09 30 13	CERAMIC TILING
09 50 00	ACOUSTICAL PANEL CEILINGS
09 51 13	ACOUSTICAL PANEL CEILINGS
09 51 23	ACOUSTICAL TILE CEILINGS
09 65 13	RESILIENT BASE AND ACCESSORIES
09 65 19	RESILIENT TILE FLOORING
09 68 13	TILE CARPETING
09 84 39	ACOUSTICAL CEILING CLOUDS
09 91 13	EXTERIOR PAINTING
09 91 23	INTERIOR PAINTING
DIVISION 10 – SPECIALTIES	
10 11 46	VISUAL DISPLAY FABRICS
10 21 13.15	STAINLESS STEEL TOILET COMPARTMENTS
10 22 39	FOLDING PANEL PARITIONS
10 28 00	TOILET ACCESSORIES
10 44 13	FIRE PROTECTION CABINETS
10 44 16	FIRE EXTINGUISHERS
10 55 00.16	PRIVATE-DELIVERY POSTAL SPECIALTIES
10 73 10	PROTECTIVE COVERS
10 75 16	GROUND-SET FLAGPOLES
DIVISION 12 – FURNISHINGS	
12 24 13	ROLLER WINDOW SHADES
12 36 61.16	SOLID SURFACING COUNTERTOPS
12 48 13	ENTRANCE FLOOR MATS AND FRAMES
12 48 16	ENTRANCE FLOOR GRILLES
DIVISION 21 - FIRE SUPPRESSION	
21 13 00	FIRE SUPPRESSION SPRINKLERS
DIVISION 22 - PLUMBING	
22 10 05	PLUMBING PIPING
22 10 06	PLUMBING PIPING SPECIALTIES
22 30 00	PLUMBING EQUIPMENT
22 40 00	PLUMBING FIXTURES

SECTION	TITLE
DIVISION 23 - HEATING, VENTILATING, AND AIR-CONDITIONING (HVAC)	
23 05 13	COMMON MOTOR REQUIREMENTS FOR HVAC EQUIPMENT
23 05 48	VIBRATION AND SEISMIC CONTROLS FOR HVAC PIPING AND EQUIPMENT
23 05 53	IDENTIFICATION FOR HVAC PIPING AND EQUIPMENT
23 05 93	TESTING, ADJUSTING, AND BALANCING FOR HVAC
23 07 13	DUCT INSULATION
23 08 00	COMMISSIONING OF HVAC
23 09 23	DIRECT-DIGITAL CONTROL SYSTEM FOR HVAC
23 31 00	HVAC DUCTS AND CASINGS
23 33 00	AIR DUCT ACCESSORIES
23 34 23	HVAC POWER VENTILATORS
23 36 00	AIR TERMINAL UNITS
23 37 00	AIR OUTLETS AND INLETS
23 40 00	HVAC AIR CLEANING DEVICES
23 74 13	PACKAGED OUTDOOR CENTRAL-STATION AIR-HANDLING UNITS
23 81 25	COMPUTER ROOM AIR CONDITIONERS - CEILING MOUNTED
DIVISION 26 - ELECTRICAL	
26 05 19	LOW-VOLTAGE ELECTRICAL POWER CONDUCTORS AND CABLES
26 05 26	GROUNDING AND BONDING FOR ELECTRICAL SYSTEMS
26 05 29	HANGERS AND SUPPORTS FOR ELECTRICAL SYSTEMS
26 05 34	CONDUIT
26 05 37	BOXES
26 05 53	IDENTIFICATION FOR ELECTRICAL SYSTEMS
26 05 73	OVERCURRENT PROTECTIVE DEVICE COORDINATION STUDY
26 09 23	LIGHTING CONTROL DEVICES
26 21 00	LOW-VOLTAGE ELECTRICAL SERVICE ENTRANCE
26 24 16	PANELBOARDS
26 27 26	WIRING DEVICES
26 28 17	ENCLOSED CIRCUIT BREAKERS
26 28 18	ENCLOSED SWITCHES
26 32 13	ENGINE GENERATORS
26 36 00	TRANSFER SWITCHES
26 41 13	LIGHTNING PROTECTION FOR STRUCTURES
26 43 00	SURGE PROTECTIVE DEVICES
26 51 00	INTERIOR LIGHTING
26 56 00	EXTERIOR LIGHTING
DIVISION 27 – COMMUNICATIONS	
27 05 26	TELECOMMUNICATIONS GROUNDING AND BONDING
27 05 28	INTERIOR COMMUNICATIONS PATHWAYS
27 05 43	EXTERIOR COMMUNICATION PATHWAYS
27 11 00	COMMUNICATIONS CABINETS AND EQUIPMENT ROOMS
27 13 00	BACKBONE AND RISER MEDIA INFRASTRUCTURE
27 15 00	HORIZONTAL MEDIA INFRASTRUCTURE
27 21 00	DATA COMMUNICATION NETWORK EQUIPMENT

SECTION **TITLE**

DIVISION 28 – ELECTRONIC SAFETY AND SECURITY
28 13 00 ACCESS CONTROL
28 23 00 VIDEO SURVEILLANCE
28 31 00 FIRE DETECTION AND ALARM

DIVISION 31 – EARTHWORK
31 10 00 SITE CLEARING
31 20 00 EARTH MOVING
31 22 16 EXCAVATION AND GRADING FOR PAVING
32 23 16.13 EXCAVATION AND BACKFILL FOR UTILITIES
31 41 33 TRENCH SAFETY

DIVISION 32 – EXTERIOR IMPROVEMENTS
32 11 13.13 LINE TREATED SUBGRADES
32 13 13 CONCRETE PAVING
32 13 14 CONCRETE SIDEWALK
32 13 15 CONCRETE DRIVEWAYS
32 13 73 CONCRETE PAVING JOINT SEALANTS
32 14 13 INTERLOCKING CONCRETE PAVEMENT OVERLAY
32 16 13 CONCRETE CURBS AND GUTTERS
32 17 23 PAVEMENT MARKING
32 31 00 PERMA COAT FENCE
32 31 00 FENCES AND GATES
32 31 19.19 DECORATIVE METAL SECURITY FENCES AND GATES
32 91 19.13 TOPSOIL
32 92 19.16 HYDRO-MULCHING

DIVISION 33 – UTILITIES
33 05 16.13 PRECAST CONCRETE STRUCTURES
33 11 00 WATERLINES
33 12 00 POLYVINYL CHLORIDE PIPE
33 12 14 HYDROSTATIC TESTING OF PIPELINES
33 12 16 GATE VALVES
33 12 19 FIRE HYDRANTS
33 13 00 DISINFECTION OF WATER LINES
33 30 00 GRAVITY SANITARY SEWERS
33 31 14 ACCEPTANCES TESTING FOR SANITARY SEWERS
33 40 00 STORM SEWERS
33 41 00 REINFORCED CONCRETE PIPE
33 41 01 HDPE PIPE
33 44 13 PRECAST CONCRETE INLETS

END OF TABLE OF CONTENTS

SECTION 003132 - GEOTECHNICAL DATA

1.1 GEOTECHNICAL DATA

A. This Document with its referenced attachments is part of the Procurement and Contracting Requirements for Project. They provide Owner's information for Bidders' convenience and are intended to supplement rather than serve in lieu of Bidders' own investigations. They are made available for Bidders' convenience and information, but are not a warranty of existing conditions. This Document and its attachments are not part of the Contract Documents.

B. Soil-boring data for Project, obtained by HVJ Associates, Inc., dated May 5, 2015, Report No. HG1213270, is available for viewing as appended to this Document.

C. A geotechnical investigation report for Project, prepared by HVJ Associates, Inc., dated May 5, 2015, Report No. HG1213270, is available for viewing as appended to this Document.

END OF SECTION 003132

SECTION 01 57 23 - STORM WATER POLLUTION CONTROL

PART 1 G E N E R A L

1.01 SECTION INCLUDES

A. Implementation of Storm Water Pollution Prevention Plans (SWP3) described in Storm Water Quality Plan.

B. Installation and maintenance of storm-water pollution prevention structures: diversion dikes, interceptor dikes, diversion swales, interceptor swales, down spout extenders, pipe slope drains, paved flumes and level spreaders. Structures are used during construction and prior to final development of the site.

C. Filter Fabric Fences:

1. Type 1: Temporary filter fabric fences for erosion and sediment control in non-channelized flow areas.

2. Type 2: Temporary reinforced filter fabric fences for erosion and sediment control in channelized flow areas.

D. Straw Bale Fence.

1.02 MEASUREMENT AND PAYMENT

A. Stipulated Price (Lump Sum) Contract. If Contract is Stipulated Price Contract, payment for Work in this Section is included in total Stipulated Price.

1.03 REFERENCE STANDARDS

A. ASTM

1. A 36 - Standard Specification for Carbon Structural Steel.

2. D698 - Standard Test Methods for Laboratory Compaction Characteristics of Soil Using Standard Effort (12,400 ft-lbf/ft3 (600 kN-m/m3)).

3. D3786 - Standard Test Method for Hydraulic Bursting Strength for Knitted Goods and Nonwoven Fabrics.

4. D 4355 - Standard Test Method for Deterioration of Geotextiles from Exposure to Ultraviolet Light and Water (Xenon-Arc Type Apparatus).

5. D 4491 - Standard Test Methods for Water Permeability of Geotextiles by Permittivity.

6. D 4632 - Standard Test Method for Grab Breaking Load and Elongation of Geotextiles.

7. D 4833 - Standard Test Method for Index Puncture Resistance of Geotextiles,

Geomembranes, and Related Products.

8. D 6382 - Standard Practice for Dynamic Mechanical Analysis and Thermogravimetry of Roofing and Waterproofing Membrane Material.

1.04 SYSTEM DESCRIPTIONS

A. Filter Fabric Fence Type 1 and Type 2: Install to allow surface or channel runoff percolation through fabric in sheet-flow manner and to retain and accumulate sediment. Maintain Filter Fabric Fences to remain in proper position and configuration at all times.

B. Straw Bale Fence: Install to allow surface runoff percolation through straw in sheet-flow manner and to retain and accumulate sediment. Maintain Straw Bale Fence to remain in proper position and configuration at all times.

B. Interceptor Dikes and Swales: Construct to direct surface or channel runoff around the project area or runoff from project area into sediment traps.

C. Sediment traps: Construct to pool surface runoff from construction area to allow sediment to settle onto the bottom of trap.

1.05 SUBMITTALS

A. Submit in accordance with Section 01 33 00 – Submittal Procedures.

B. Submit manufacturer's literature for product specifications and installation instructions.

C. Submit manufacturer’s catalog sheets and other product data on geotextile or filter fabrics, outlet pipe, perforated riser and connectors.

D. Submit proposed methods, equipment, materials, and sequence of operations for storm-water pollution prevention structures.

PART 2 P R O D U C T S

2.01 GEOTEXTILE FILTER FABRIC

A. Woven or nonwoven geotextile filter fabric made of either polypropylene, polyethylene, ethylene, or polyamide material, in continuous rolls of longest practical length.

B. Grab Strength: 100 psi in any principal direction (ASTM D-4632), Mullen burst strength >200 psi (ASTM D-3786), and equivalent opening size between 50 and 140.

C. Furnish ultraviolet inhibitors and stabilizers for minimum 6 months of expected usable construction life at temperature range of 0 degrees F to 120 degrees F.

D. Mirafi, Inc., Synthetic Industries, or equivalent

2.02 FENCING

A. Wire Fencing: Woven galvanized steel wire, 14 gauge by 6-inch square mesh spacing, minimum 24 inch roll or sheet width of longest practical length.

B. Fence Stakes: Nominal 2 by 2 inch moisture-resistant treated wood or steel posts (min. of 1.25 lbs. per linear foot and Brinell Hardness greater than 140) with safety caps on top; length as required for minimum 8 inch bury and full height of filter fabric.

2.03 SANDBAGS

A. Provide woven material made of polypropylene, polyethylene, or polyamide material.

1. Minimum unit weight of four ounces per square yard.

2. Minimum grab strength of 100 psi in any principal direction (ASTM D4632)

3. Mullen burst strength exceeding 300 psi (ASTM D3786).

4. Ultraviolet stability exceeding 70 percent.

5. Size: Length:18 to 24 inches. Width: 12 to 18 inches. Thickness: 6 to 8 inches. Weight: 50 to 125 pounds.

2.04 STRAW BALE

A. Straw: Standard-baled agricultural hay bound by wire, nylon, or polypropylene rope. Do not use jute or cotton binding.

B. Straw Bale Stakes (applicable where bales are on soil): No. 3 (3/8 diameter) reinforcing bars, deformed or smooth at Contractor's option, length as required for minimum 18 inch bury and full height bales.

PART 3 E X E C U T I O N

3.01 PREPARATION, INSTALLATION AND MAINTAINANCE

A. Provide erosion and sediment control structures at locations shown on the Drawings.

B. Do not clear, grub or rough cut until erosion and sediment control systems are in place unless approved by Project Manger to allow installation of erosion and sediment control systems, soil testing and surveying.

C. Maintain existing erosion and sediment control systems located within project site until acceptance of Project or until directed by Project Manger to remove and discard existing system.

D. Regularly inspect and repair or replace damaged components of erosion and sediment control structures. Unless otherwise directed, maintain erosion and sediment control structure until project area stabilization is accepted. . Redress and replace granular fill at outlets as needed to

replenish depleted granular fill. Remove erosion and sediment control structures promptly when directed by Project Manger. Dispose of materials in accordance with Section 01 74 19 – Construction Waste Management and Disposal.

E. Remove and dispose sediment deposits at the designated spoil site for the Project. If a project spoil site is not designated on Drawings, dispose of sediment off site at approved location in accordance with Section 01 74 19 – Construction Waste Management and Disposal.

F. Unless otherwise shown on the Drawings, compact embankments, excavations, and trenches in accordance with Section 33 23 00 – Pavement Excavation or Section 31 23 00 Excavation and Backfill for Utilities.

G. Prohibit equipment and vehicles from maneuvering on areas outside of dedicated right of way and easements for construction. Immediately repair damage caused by construction traffic to erosion and sediment control structures.

H. Protect existing trees and plants in accordance with Section 01 56 39 – Temporary Tree and Plant Protection.

3.02 FILTER FABRIC FENCE CONSTRUCTION METHODS

A. Fence Type 1:

1. Install stakes 3 feet on center maximum and firmly embed minimum 8 inches in soil. If filter fabric is factory preassembled with support netting, then maximum support spacing is 8 feet. Install wood stakes at a slight angle toward the source of anticipated runoff.

2. Trench in the toe of the fence lines so the downward face of the trenches is flat and perpendicular to direction of flow. V-trench configuration as shown on Drawings may also be used.

3. Lay fabric along edges of trenches in longest practical continuous runs to minimize joints. Make joints only at a support post. Splice with minimum 6-inch overlap and seal securely.

4. Staple filter fabric to stakes at maximum 3 inches on center. Extend fabric minimum 18 inches and maximum 36 inches above natural ground.

5. Backfill and compact trench.

B. Fence Type 2:

1. Layout fence same as for Type 1.

2. Install stakes at 6 feet on center maximum and at each joint in wire fence, firmly embedded 1-foot minimum, and inclined it as for Type 1.

3. Tie wire fence to stakes with wire at 6 inches on center maximum. Overlap joints minimum one bay of mesh.

4. Install trench same as for Type 1.

5. Fasten filter fabric wire fence with tie wires at 3 inches on center maximum.

6. Layout fabric same as for Type 1. Fasten to wire fence with wire ties at 3 inches on center maximum and, if applicable, to stakes above top of wire fence it as for Type 1.

7. Backfill and compact trench.

C. Attach filter fabric to wooden fence stakes spaced a maximum of 6 feet apart or steel fence stakes spaced a maximum of 8 feet apart and embedded a minimum of 12 inches. Install stakes at a slight angle toward source of anticipated runoff.

D. Trench in toe of filter fabric fence with spade or mechanical trencher so that downward face of trench is flat and perpendicular to direction of flow. A V-trench configuration may also be used. Lay filter fabric along edges of trench. Backfill and compact trench upon completion of Construction.

E. Filter fabric fence shall have a minimum height of 18 inches and a maximum height of 36 inches above natural ground.

F. Cut length of fence to minimize use of joints. When joints are necessary, splice fabric together only at support post with minimum 6 inch overlap and seal securely.

G. Reinforced Filter Fabric Barrier Construction Methods

1. Attach woven wire fence to fence stakes.

2. Securely fasten filter fabric material to wire fence with tie wires.

3. When used in swales, ditches or diversions, elevation of barrier at top of filter fabric at flow line location in channel shall be lower than bottom elevation of filter fabric at ends of barrier or top of bank, whichever is less, in order to keep storm water discharge in channel from overtopping bank.

4. Remove sediment deposits when silt reaches depth one-third height of barrier or 6 inches, whichever is less.

3.04 DIKE AND SWALE

A. Unless otherwise indicated, maintain minimum dike height of 18 inches, measured from cleared ground at up slope toe to top of dike. Maintain side slopes of 2:1 or flatter.

B. Dike and Swale Stabilization: When shown on the Drawings, place gravel lining 3 inches thick and compacted into the soil or 6 inches thick if truck crossing is expected. Extend gravel lining across bottom and up both sides of swale minimum height of 8 inches vertically, above bottom. Gravel lining on dike side shall extend up the up slope side of dike a minimum height of 8 inches, measured vertically from interface of existing or graded ground and up slope toe of dike,

as shown on Drawings.

C. Divert flow from dikes and swales to sediment basins, stabilized outlets, or sediment trapping devices of types and at locations shown on Drawings. Grade dikes and swales as shown on Drawings, or, if not specified, provide positive drainage with maximum grade of 1 percent to outlet or basin.

D. Clear in accordance with Section 31 10 00 – Site Clearing embankments in accordance with Section 31 22 16 – Excavation and Grading for Paving.

E. Carry out excavation for swale construction so that erosion and water pollution is minimal. Minimum depth shall be 1 foot and bottom width shall be 4 feet, with level swale bottom. Excavation slopes shall be 2:1 or flatter. Clear, grub and strip excavation area of vegetation and root material.

3.05 LEVEL SPREADER

A. Construct level spreader on undisturbed soil and not on fill. Ensure that spreader lip is level for uniform spreading of storm runoff.

B. Maintain at required depth, grade, and cross section as specified on Drawings. Remove sediment deposits as well as projections or other irregularities which will impede normal flow.

3.06 INLET PROTECTION BARRIER

A. Place rock filled sand bags and filter fabric fences at locations shown on the SWP3.

3.07 STRAW BALE FENCE CONSTRUCTION METHODS

A. Place bales in row with ends tightly abutting adjacent bales. Place bales with bindings parallel to ground surface.

B. Embed bale in soil a minimum of 4 inches.

C. Securely anchor bales in place with Straw Bale Stakes driven through bales a minimum of 18-inches into ground. Angle first stake in each bale toward previously laid bale to force bales together.

D. Fill gaps between bales with straw to prevent water from channeling between bales. Wedge carefully in order not to separate bales.

E. Replace with new straw bale fence as required by Project Manager.

3.08 STREET AND SIDEWALK CLEANING

A. Keep areas clean of construction debris and mud carried by construction vehicles and equipment. If necessary, install stabilized construction exits at construction, staging, storage, and disposal areas.

B. In lieu of or in addition to stabilized construction exits, shovel or sweep pavements as required to keep areas clean. Do not waterhose or sweep debris and mud off street into adjacent areas, except, hose sidewalks during off-peak hours, after sweeping.

3.09 WASTE COLLECTION AREAS

A. Prevent water runoff from passing through waste collection areas, and prevent water runoff from waste collection areas migrating outside collection areas.

3.10 EQUIPMENT MAINTENANCE AND REPAIR

A. Confine maintenance and repair of construction machinery and equipment to areas specifically designated for that purpose, so fuels, lubricants, solvents, and other potential pollutants are not washed directly into receiving streams or storm water conveyance systems. Provide these areas with adequate waste disposal receptacles for liquid and solid waste. Clean and inspect maintenance areas daily.

B. Where designated equipment maintenance areas are not feasible, take precautions during each individual repair or maintenance operation to prevent potential pollutants from washing into streams or conveyance systems. Provide temporary waste disposal receptacles.

3.11 VEHICLE/ EQUIPMENT WASHING AREAS

A. Install wash area (stabilized with coarse aggregate) adjacent to stabilized construction exit(s), as required to prevent mud and dirt run-off. Release wash water into drainage swales or inlets protected by erosion and sediment controls. Build wash at Stabilized Construction Exit. Install gravel or rock base beneath wash areas.

B. Wash vehicles only at designated wash areas. Do not wash vehicles such as concrete delivery trucks or dump trucks and other construction equipment at locations where runoff flows directly into watercourses or storm water conveyance systems.

C. Locate wash areas to spread out and evaporate or infiltrate wash water directly into ground, or collect runoff in temporary holding or seepage basins.

3.12 WATER RUNOFF AND EROSION CONTROL

A. Control surface water, runoff, subsurface water, and water from excavations and structures to prevent damage to the Work, the site, or adjoining properties.

B. Control fill, grading and ditching to direct water away from excavations, pits, tunnels, and other construction areas, and to direct drainage to proper runoff courses to prevent erosion, sedimentation or damage.

C. Provide, operate, and maintain equipment and facilities of adequate size to control surface water.

D. Dispose of drainage water to prevent flooding, erosion, or other damage to the site or adjoining areas. Follow environmental requirements.

E. Retain existing drainage patterns external to the site by constructing temporary earth berms, sedimentation basins, retaining areas, and temporary ground cover as required to control conditions.

F. Plan and execute construction and earth work to control surface drainage from cuts and fills, and from borrow and waste disposal areas, to prevent erosion and sedimentation.

1. Hold area of bare soil exposed at one time to a minimum.

2. Provide temporary controls such as berms, dikes, and drains.

G. Construct fill and waste areas by selective placement to eliminate surface silts or clays which will erode.

H. Inspect earthwork periodically to detect start of erosion. Immediately apply corrective measures as required to control erosion.

I. Dispose of sediments offsite, not in or adjacent to streams or floodplains, nor allow sediments to flush into streams or drainage ways. Assume responsibility for offsite disposal location.

J. Unless otherwise indicated, compact embankments, excavations, and trenches by mechanically blading, tamping, and rolling soil in maximum of 8-inch layers. Provide compaction density at minimum 90 percent Standard Proctor ASTM D-698-78 density. Make at least one test per 500 cubic yards of embankment.

K. Do not maneuver vehicles on areas outside of dedicated rights-of-way and easements for construction. Immediately repair damage to erosion and sedimentation control systems caused by construction traffic.

L. Do not damage existing trees intended to remain.

3.13 REMOVAL OF CONTROLS

A. Remove erosion and sediment controls when the site is finally stabilized or as directed by Project Manager.

B. Dispose of sediments and waste products following Section 01 50 00 – Temporary Facilities and Controls

END OF SECTION 01 57 23

SECTION 01 74 19 - CONSTRUCTION WASTE MANAGEMENT AND DISPOSAL

PART 1 - GENERAL

1.1 RELATED DOCUMENTS

A. Drawings and general provisions of the Contract, including General and Supplementary Conditions, apply to this Section.

1.2 SUMMARY

A. Section specifies administrative and procedural requirements for the following, as applicable:

1. Salvaging nonhazardous construction waste.
2. Recycling nonhazardous construction waste.
3. Disposing of nonhazardous construction waste.

1.3 RELATED SECTIONS

A. Coordinate Work of this Section with work of other sections, including Division 01 Sections, as required to properly execute the work and as necessary to maintain satisfactory progress of the work.

1.4 DEFINITIONS

A. Construction Waste: Building and site improvement materials and other solid waste resulting from construction, remodeling, renovation, or repair operations. Construction waste includes packaging.

B. Demolition Waste: Building and site improvement materials resulting from demolition or selective demolition operations.

C. Disposal: Removal off-site of demolition and construction waste and subsequent sale, recycling, reuse, or deposit in landfill or incinerator acceptable to authorities having jurisdiction.

D. Recycle: Recovery of demolition or construction waste for subsequent processing in preparation for reuse.

E. Salvage: Recovery of demolition or construction waste and subsequent sale or reuse in another facility.

F. Salvage and Reuse: Recovery of demolition or construction waste and subsequent incorporation into the Work.

1.5 PERFORMANCE REQUIREMENTS

A. General: Develop waste management plan that results in end-of-Project rates for salvage/recycling of 50 percent by weight of total waste generated by the Work.

1.6 SUBMITTALS

A. Waste Management Plan: Submit three copies of plan within seven days of date established for commencement of the Work.

B. Waste Reduction Progress Reports: Concurrent with each Application for Payment, submit three (3) copies of report. Include the following information, as applicable:

1. Material category.
2. Generation point of waste.
3. Total quantity of waste in tons.
4. Quantity of waste salvaged, both estimated and actual in tons.
5. Quantity of waste recycled, both estimated and actual in tons.
6. Total quantity of waste recovered (salvaged plus recycled) in tons.
7. Total quantity of waste recovered (salvaged plus recycled) as a percentage of total waste.

C. Waste Reduction Calculations: Before request for Substantial Completion, submit three copies of calculated end-of-Project rates for salvage, recycling, and disposal as a percentage of total waste generated by the Work.

D. Records of Donations: Indicate receipt and acceptance of salvageable waste donated to individuals and organizations. Indicate whether organization is tax exempt.

E. Records of Sales: Indicate receipt and acceptance of salvageable waste sold to individuals and organizations. Indicate whether organization is tax exempt.

F. Recycling and Processing Facility Records: Indicate receipt and acceptance of recyclable waste by recycling and processing facilities licensed to accept them. Include manifests, weight tickets, receipts, and invoices.

G. Landfill and Incinerator Disposal Records: Indicate receipt and acceptance of waste by landfills and incinerator facilities licensed to accept them. Include manifests, weight tickets, receipts, and invoices.

H. Qualification Data: For Waste Management Coordinator.

1.7 QUALITY ASSURANCE

A. Regulatory Requirements: Comply with hauling and disposal regulations of authorities having jurisdiction.

B. Waste Management Conference: Conduct conference at Project site to comply with requirements in Division 01 Section "Project Management and Coordination". Review methods and procedures related to waste management including, but not limited to, the following:

1. Review and discuss waste management plan including responsibilities of Waste Management Coordinator.

2. Review requirements for documenting quantities of each type of waste and its disposition.
3. Review and finalize procedures for materials separation and verify availability of containers and bins needed to avoid delays.
4. Review procedures for periodic waste collection and transportation to recycling and disposal facilities.
5. Review waste management requirements for each trade.

1.8 WASTE MANAGEMENT PLAN

A. General: Develop plan consisting of waste identification, waste reduction work plan, and cost/revenue analysis. Indicate quantities by weight or volume, but use same units of measure throughout waste management plan.

B. Waste Identification: Indicate anticipated types and quantities of site-clearing and construction waste generated by the Work. Include estimated quantities and assumptions for estimates.

C. Waste Reduction Work Plan: List each type of waste and whether it will be salvaged, recycled, or disposed of in landfill or incinerator. Include points of waste generation, total quantity of each type of waste, quantity for each means of recovery, and handling and transportation procedures.

1. Salvaged Materials for Reuse: For materials that will be salvaged and reused in this Project, describe methods for preparing salvaged materials before incorporation into the Work.
2. Salvaged Materials for Sale: For materials that will be sold to individuals and organizations, include list of their names, addresses, and telephone numbers.
3. Salvaged Materials for Donation: For materials that will be donated to individuals and organizations, include list of their names, addresses, and telephone numbers.
4. Recycled Materials: Include list of local receivers and processors and type of recycled materials each will accept. Include names, addresses, and telephone numbers.
5. Disposed Materials: Indicate how and where materials will be disposed of. Include name, address, and telephone number of each landfill and incinerator facility.
6. Handling and Transportation Procedures: Include method that will be used for separating recyclable waste including sizes of containers, container labeling, and designated location on Project site where materials separation will be located.

D. Cost/Revenue Analysis: Indicate total cost of waste disposal as if there was no waste management plan and net additional cost or net savings resulting from implementing waste management plan. Include the following:

1. Total quantity of waste.
2. Estimated cost of disposal (cost per unit). Include hauling and tipping fees and cost of collection containers for each type of waste.
3. Total cost of disposal (with no waste management).
4. Revenue from salvaged materials.

5. Revenue from recycled materials.
6. Savings in hauling and tipping fees by donating materials.
7. Savings in hauling and tipping fees that are avoided.
8. Handling and transportation costs. Include cost of collection containers for each type of waste.
9. Net additional cost or net savings from waste management plan.

PART 2 - PRODUCTS

Not Used

PART 3 - EXECUTION

3.1 PLAN IMPLEMENTATION

A. General: Implement waste management plan as approved by Project Manager. Provide handling, containers, storage, signage, transportation, and other items as required to implement waste management plan during the entire duration of the Contract.

1. Comply with Section 01 50 00 – Temporary Facilities and Controls for operation, termination, and removal requirements.

B. Waste Management Coordinator: Engage a waste management coordinator to be responsible for implementing, monitoring, and reporting status of waste management work plan. Coordinator shall be present at Project site full time for duration of Project.

C. Training: Train workers, subcontractors, and suppliers on proper waste management procedures, as appropriate for the Work occurring at Project site.

1. Distribute waste management plan to everyone concerned within three (3) days of submittal return.
2. Distribute waste management plan to entities when they first begin work on-site. Review plan procedures and locations established for salvage, recycling, and disposal.

D. Site Access and Temporary Controls: Conduct waste management operations to ensure minimum interference with roads, streets, walks, walkways, and other adjacent occupied and used facilities.

1. Designate and label specific areas on Project site necessary for separating materials that are to be salvaged, recycled, reused, donated, and sold.
2. Comply with Division 01 Section "Temporary Facilities and Controls" for controlling dust and dirt, environmental protection, and noise control.

3.2 DISPOSAL OF WASTE

A. General: Except for items or materials to be salvaged, recycled, or otherwise reused, remove waste materials from Project site and legally dispose of them in a landfill or incinerator acceptable to authorities having jurisdiction.

1. Except as otherwise specified, do not allow waste materials that are to be disposed of accumulate on-site.
2. Remove and transport debris in a manner that will prevent spillage on adjacent surfaces and areas.

B. Burning or burying debris on site is not permitted.

C. Disposal: Transport waste materials and legally dispose of them off Owner's property.

END OF SECTION 01 74 19

SECTION 03 30 00 - CAST-IN-PLACE CONCRETE

PART 1 - GENERAL

1.1 SUMMARY

A. Section includes cast-in-place concrete, including formwork, reinforcement, concrete materials, mixture design, placement procedures, and finishes.

B. Related Requirements:

1. Section 312000 "Earth Moving" for select fill under slabs-on-grade.

1.2 ACTION SUBMITTALS

A. Product Data: For each type of product.

B. Design Mixtures: For each concrete mixture.

C. Steel Reinforcement Shop Drawings: Placing Drawings that detail fabrication, bending, and placement.

1.3 INFORMATIONAL SUBMITTALS

A. Material certificates.

B. Material test reports.

C. Formwork Shop Drawings: Prepared by or under the supervision of a qualified professional engineer, detailing fabrication, assembly, and support of formwork.

D. Floor surface flatness and levelness measurements indicating compliance with specified tolerances.

1.4 QUALITY ASSURANCE

A. Manufacturer Qualifications: A firm experienced in manufacturing ready-mixed concrete products and that complies with ASTM C 94/C 94M requirements for production facilities and equipment.

1. Manufacturer certified according to NRMCA's "Certification of Ready Mixed Concrete Production Facilities."

B. Testing Agency Qualifications: An independent agency, acceptable to authorities having jurisdiction, qualified according to ASTM C 1077 and ASTM E 329 for testing indicated.

1.5 PRECONSTRUCTION TESTING

A. Preconstruction Testing Service: Engage a qualified testing agency to perform preconstruction testing on concrete mixtures.

1.6 FIELD CONDITIONS

A. Cold-Weather Placement: Comply with ACI 306.1.

1. Do not use calcium chloride, salt, or other materials containing antifreeze agents or chemical accelerators unless otherwise specified and approved in mixture designs.

B. Hot-Weather Placement: Comply with ACI 301.

PART 2 - PRODUCTS

2.1 CONCRETE, GENERAL

A. ACI Publications: Comply with the following unless modified by requirements in the Contract Documents:

1. ACI 301.
2. ACI 117.

2.2 FORM-FACING MATERIALS

A. Smooth-Formed Finished Concrete: Form-facing panels that provide continuous, true, and smooth concrete surfaces. Furnish in largest practicable sizes to minimize number of joints.

B. Rough-Formed Finished Concrete: Plywood, lumber, metal, or another approved material. Provide lumber dressed on at least two edges and one side for tight fit.

2.3 STEEL REINFORCEMENT

A. Reinforcing Bars: ASTM A 615/A 615M, Grade 60, deformed.

B. epoxy coated, with less than 2 percent damaged coating in each 12-inch bar length.

C. Plain-Steel Welded-Wire Reinforcement: ASTM A 1064/A 1064M, plain, fabricated from as-drawn steel wire into flat sheets.

D. Bar Supports: Bolsters, chairs, spacers, and other devices for spacing, supporting, and fastening reinforcing bars and welded-wire reinforcement in place. Manufacture bar supports from steel wire, plastic, or precast concrete according to CRSI's "Manual of Standard Practice."

2.4 CONCRETE MATERIALS

A. Regional Materials: Concrete shall be manufactured within 500 miles of Project site from aggregates and cementitious materials that have been extracted, harvested, or recovered, as well as manufactured, within 500 miles of Project site.

B. Cementitious Materials:

1. Portland Cement: ASTM C 150/C 150M, Type I/II, gray.
2. Fly Ash: ASTM C 618, Class F or C.
3. Slag Cement: ASTM C 989/C 989M, Grade 100 or 120.

C. Normal-Weight Aggregates: ASTM C 33/C 33M, graded.

1. Maximum Coarse-Aggregate Size: 1 inch nominal, unless otherwise noted.
2. Fine Aggregate: Free of materials with deleterious reactivity to alkali in cement.

D. Air-Entraining Admixture: ASTM C 260/C 260M.

E. Chemical Admixtures: Certified by manufacturer to be compatible with other admixtures and that do not contribute water-soluble chloride ions exceeding those permitted in hardened concrete. Do not use calcium chloride or admixtures containing calcium chloride.

1. Water-Reducing Admixture: ASTM C 494/C 494M, Type A.
2. Retarding Admixture: ASTM C 494/C 494M, Type B.
3. Water-Reducing and Retarding Admixture: ASTM C 494/C 494M, Type D.
4. High-Range, Water-Reducing Admixture: ASTM C 494/C 494M, Type F.
5. High-Range, Water-Reducing and Retarding Admixture: ASTM C 494/C 494M, Type G.
6. Plasticizing and Retarding Admixture: ASTM C 1017/C 1017M, Type II.

F. Water: ASTM C 94/C 94M and potable.

2.5 VAPOR RETARDERS

A. Sheet Vapor Retarder: ASTM E 1745, Class A, 15-mil. Include manufacturer's recommended adhesive or pressure-sensitive tape.

1. Manufacturers: Subject to compliance with requirements, available manufacturers offering products that may be incorporated into the Work include, but are not limited to the following:

a. Grace Construction Products; W.R. Grace & Co. -- Conn.
b. Raven Industries, Inc.
c. Stego Industries, LLC.
d. W. R. Meadows, Inc.

2.6 CURING MATERIALS

A. Evaporation Retarder: Waterborne, monomolecular film forming, manufactured for application to fresh concrete.

1. Manufacturers: Subject to compliance with requirements, available manufacturers offering products that may be incorporated into the Work include, but are not limited to the following:
   a. BASF Corporation; Construction Systems.
   b. Dayton Superior.
   c. Euclid Chemical Company (The); an RPM company.
   d. Lambert Corporation.
   e. Sika Corporation.

B. Absorptive Cover: AASHTO M 182, Class 2, burlap cloth made from jute or kenaf, weighing approximately 9 oz./sq. yd. when dry.

C. Moisture-Retaining Cover: ASTM C 171, polyethylene film or white burlap-polyethylene sheet.

D. Water: Potable.

E. Clear, Waterborne, Membrane-Forming Curing Compound: ASTM C 309, Type 1, Class B, dissipating.

1. Manufacturers: Subject to compliance with requirements, available manufacturers offering products that may be incorporated into the Work include, but are not limited to the following:

   a. BASF Corporation; Construction Systems.
   b. ChemMasters, Inc.
   c. Dayton Superior.
   d. Euclid Chemical Company (The); an RPM company.
   e. W. R. Meadows, Inc.

F. Clear, Waterborne, Membrane-Forming Curing and Sealing Compound: ASTM C 1315, Type 1, Class A.

1. Manufacturers: Subject to compliance with requirements, available manufacturers offering products that may be incorporated into the Work include, but are not limited to the following:

   a. BASF Corporation; Construction Systems.
   b. ChemMasters, Inc.
   c. Dayton Superior.
   d. Euclid Chemical Company (The); an RPM company.
   e. W. R. Meadows, Inc.

2.7 RELATED MATERIALS

A. Expansion- and Isolation-Joint-Filler Strips: ASTM D 1751, asphalt-saturated cellulosic fiber.

2.8 CONCRETE MIXTURES, GENERAL

A. Prepare design mixtures for each type and strength of concrete, proportioned on the basis of laboratory trial mixture or field test data, or both, according to ACI 301.

B. Cementitious Materials: Use fly ash, pozzolan, slag cement, and silica fume as needed to reduce the total amount of portland cement, which would otherwise be used, by not less than 40 percent.

C. Admixtures: Use admixtures according to manufacturer's written instructions.

1. Use water-reducing high-range water-reducing or plasticizing admixture in concrete, as required, for placement and workability.
2. Use water-reducing and -retarding admixture when required by high temperatures, low humidity, or other adverse placement conditions.
3. Use water-reducing admixture in pumped concrete, concrete for heavy-use industrial slabs and parking structure slabs, concrete required to be watertight, and concrete with a w/c ratio below 0.50.

2.9 CONCRETE MIXTURES FOR BUILDING ELEMENTS

A. Normal-Weight Concrete:

1. Minimum Compressive Strength: 3500 psi (slabs on grade and foundations) 4000 psi (tilt wall panels), at 28 days.
2. Maximum W/C Ratio: 0.50.
3. Slump Limit: 4 inches, plus or minus 1 inch.
4. Air Content: Do not allow air content of trowel-finished floors to exceed 3 percent.

2.10 FABRICATING REINFORCEMENT

A. Fabricate steel reinforcement according to CRSI's "Manual of Standard Practice."

2.11 CONCRETE MIXING

A. Ready-Mixed Concrete: Measure, batch, mix, and deliver concrete according to ASTM C 94/C 94M, and furnish batch ticket information.

1. When air temperature is between 85 and 90 deg F, reduce mixing and delivery time from 1-1/2 hours to 75 minutes; when air temperature is above 90 deg F, reduce mixing and delivery time to 60 minutes.

PART 3 - EXECUTION

3.1 FORMWORK INSTALLATION

A. Design, erect, shore, brace, and maintain formwork, according to ACI 301, to support vertical, lateral, static, and dynamic loads, and construction loads that might be applied, until structure can support such loads.

B. Construct formwork so concrete members and structures are of size, shape, alignment, elevation, and position indicated, within tolerance limits of ACI 117.

C. Do not chamfer exterior corners and edges of permanently exposed concrete, except where indicated on drawings.

3.2 EMBEDDED ITEM INSTALLATION

A. Place and secure anchorage devices and other embedded items required for adjoining work that is attached to or supported by cast-in-place concrete. Use setting drawings, templates, diagrams, instructions, and directions furnished with items to be embedded.

3.3 VAPOR-RETARDER INSTALLATION

A. Sheet Vapor Retarders: Place, protect, and repair sheet vapor retarder according to ASTM E 1643 and manufacturer's written instructions.

1. Lap joints 6 inches and seal with manufacturer's recommended tape.

3.4 STEEL REINFORCEMENT INSTALLATION

A. General: Comply with CRSI's "Manual of Standard Practice" for fabricating, placing, and supporting reinforcement.

1. Do not cut or puncture vapor retarder. Repair damage and reseal vapor retarder before placing concrete.

3.5 JOINTS

A. General: Construct joints true to line with faces perpendicular to surface plane of concrete.

B. Construction Joints: Install so strength and appearance of concrete are not impaired, at locations indicated or as approved by Architect.

C. Contraction Joints in Slabs-on-Grade: Form weakened-plane contraction joints, sectioning concrete into areas as indicated. Construct contraction joints for a depth equal to at least one-fourth of concrete thickness as follows:

1. Sawed Joints: Form contraction joints with power saws equipped with shatterproof abrasive or diamond-rimmed blades. Cut 1/8-inch-wide joints into concrete when cutting

action does not tear, abrade, or otherwise damage surface and before concrete develops random contraction cracks.

D. Isolation Joints in Slabs-on-Grade: After removing formwork, install joint-filler strips at slab junctions with vertical surfaces, such as column pedestals, foundation walls, grade beams, and other locations, as indicated.

3.6 CONCRETE PLACEMENT

A. Before placing concrete, verify that installation of formwork, reinforcement, and embedded items is complete and that required inspections are completed.

B. Deposit concrete continuously in one layer or in horizontal layers of such thickness that no new concrete is placed on concrete that has hardened enough to cause seams or planes of weakness. If a section cannot be placed continuously, provide construction joints as indicated. Deposit concrete to avoid segregation.

1. Consolidate placed concrete with mechanical vibrating equipment according to ACI 301.

3.7 FINISHING FORMED SURFACES

A. Rough-Formed Finish: As-cast concrete texture imparted by form-facing material with tie holes and defects repaired and patched. Remove fins and other projections that exceed specified limits on formed-surface irregularities.

1. Apply to concrete surfaces not exposed to public view.

B. Smooth-Formed Finish: As-cast concrete texture imparted by form-facing material, arranged in an orderly and symmetrical manner with a minimum of seams. Repair and patch tie holes and defects. Remove fins and other projections that exceed specified limits on formed-surface irregularities.

1. Apply to concrete surfaces exposed to public view, or to be covered with a coating or covering material applied directly to concrete.

C. Related Unformed Surfaces: At tops of walls, horizontal offsets, and similar unformed surfaces adjacent to formed surfaces, strike off smooth and finish with a texture matching adjacent formed surfaces. Continue final surface treatment of formed surfaces uniformly across adjacent unformed surfaces unless otherwise indicated.

3.8 FINISHING FLOORS AND SLABS

A. General: Comply with ACI 302.1R recommendations for screeding, restraightening, and finishing operations for concrete surfaces. Do not wet concrete surfaces.

B. Scratch Finish: While still plastic, texture concrete surface that has been screeded and bull-floated or darbied. Use stiff brushes, brooms, or rakes to produce a profile amplitude of 1/4 inch in one direction.

1. Apply scratch finish to surfaces to receive mortar setting beds for bonded cementitious floor finishes.

C. Float Finish: Consolidate surface with power-driven floats or by hand floating if area is small or inaccessible to power-driven floats. Restraighten, cut down high spots, and fill low spots. Repeat float passes and restraightening until surface is left with a uniform, smooth, granular texture.

1. Apply float finish to surfaces to receive trowel finish and to be covered with sand-bed terrazzo.

D. Trowel Finish: After applying float finish, apply first troweling and consolidate concrete by hand or power-driven trowel. Continue troweling passes and restraighten until surface is free of trowel marks and uniform in texture and appearance. Grind smooth any surface defects that would telegraph through applied coatings or floor coverings.

1. Apply a trowel finish to surfaces exposed to view or to be covered with resilient flooring, carpet, ceramic or quarry tile set over a cleavage membrane, paint, or another thin-film-finish coating system.
2. Finish and measure surface, so gap at any point between concrete surface and an unleveled, freestanding, 10-ft.-long straightedge resting on two high spots and placed anywhere on the surface does not exceed 1/8 inch.

E. Trowel and Fine-Broom Finish: Apply a first trowel finish to surfaces where ceramic or quarry tile is to be installed by either thickset or thinset method. While concrete is still plastic, slightly scarify surface with a fine broom.

1. Comply with flatness and levelness tolerances for trowel-finished floor surfaces.

F. Broom Finish: Apply a broom finish to exterior concrete platforms, steps, ramps, and elsewhere as indicated.

1. Immediately after float finishing, slightly roughen trafficked surface by brooming with fiber-bristle broom perpendicular to main traffic route. Coordinate required final finish with Architect before application.

3.9 CONCRETE PROTECTING AND CURING

A. General: Protect freshly placed concrete from premature drying and excessive cold or hot temperatures. Comply with ACI 306.1 for cold-weather protection and ACI 301 for hot-weather protection during curing.

B. Evaporation Retarder: Apply evaporation retarder to unformed concrete surfaces if hot, dry, or windy conditions cause moisture loss approaching 0.2 lb/sq. ft. x h before and during finishing operations. Apply according to manufacturer's written instructions after placing, screeding, and bull floating or darbying concrete, but before float finishing.

C. Formed Surfaces: Cure formed concrete surfaces, including underside of beams, supported slabs, and other similar surfaces. If forms remain during curing period, moist cure after

loosening forms. If removing forms before end of curing period, continue curing for remainder of curing period.

D. Cure concrete according to ACI 308.1, by one or a combination of the following methods:

1. Moisture Curing: Keep surfaces continuously moist for not less than seven days.
2. Moisture-Retaining-Cover Curing: Cover concrete surfaces with moisture-retaining cover for curing concrete, placed in widest practicable width, with sides and ends lapped at least 12 inches, and sealed by waterproof tape or adhesive. Cure for not less than seven days. Immediately repair any holes or tears during curing period, using cover material and waterproof tape.
3. Curing Compound: Apply uniformly in continuous operation by power spray or roller according to manufacturer's written instructions. Recoat areas subjected to heavy rainfall within three hours after initial application. Maintain continuity of coating and repair damage during curing period.

    a. Removal: After curing period has elapsed, remove curing compound without damaging concrete surfaces by method recommended by curing compound manufacturer unless manufacturer certifies curing compound does not interfere with bonding of floor covering used on Project.

4. Curing and Sealing Compound: Apply uniformly to floors and slabs indicated in a continuous operation by power spray or roller according to manufacturer's written instructions. Recoat areas subjected to heavy rainfall within three hours after initial application. Repeat process 24 hours later and apply a second coat. Maintain continuity of coating and repair damage during curing period.

3.10 CONCRETE SURFACE REPAIRS

A. Defective Concrete: Repair and patch defective areas when approved by Architect. Remove and replace concrete that cannot be repaired and patched to Architect's approval.

3.11 FIELD QUALITY CONTROL

A. Special Inspections: Owner will engage a special inspector and qualified testing and inspecting agency to perform field tests and inspections and prepare test reports.

END OF SECTION 03 30 00

SECTION 03 39 00 – CONCRETE CURING

1 GENERAL

1.1 SUMMARY

A. This section includes the following:

1. Curing of Portland cement concrete paving.

1.2 MEASUREMENT AND PAYMENT

A. Stipulated Price (Lump Sum). If the Contract is a Stipulated Price Contract, payment for work in this Section is included in the total Stipulated Price.

1.3 REFERENCES

A. ASTM C 156 - Standard Test Method for Water Retention by Concrete Curing Materials.

B. ASTM C 171 - Standard Specifications for Sheet Materials for Curing Concrete.

C. ASTM C 309 - Standard Specifications for Liquid Membrane-Forming Compounds for Curing Concrete.

2 PRODUCTS

2.1 COVER MATERIALS FOR CURING

A. Conform curing materials to one of the following:

1. Polyethylene Film: Opaque pigmented white film conforming to requirements of ASTM C 171.

2. Waterproofed Paper: Paper conforming to requirements of ASTM C 171.

3. Cotton Mats: Single layer of cotton filler completely enclosed in cover of cotton cloth. Mats shall contain not less than 3/4 of a pound of uniformly distributed cotton filler per square yard of mat. Cotton cloth used for covering materials shall weigh not less than 6 ounces per square yard. Stitch mats so that mat will contact surface of pavement at all points when saturated with water.

2.2 LIQUID MEMBRANE-FORMING COMPOUNDS

A. Conform liquid membrane-forming compounds to ASTM C 309. Membrane shall restrict loss of water to not more than 0.55 kg/m^2 in 72 hours using test method ASTM C 156.

3 EXECUTION

3.1 CURING REQUIREMENT

A. Cure concrete pavement by protecting against loss of moisture for period of not less than 72 hours immediately upon completion of finishing operations. Do not use membrane curing for concrete pavement to be overlaid by asphalt concrete.

B. Failure to provide sufficient cover material shall be cause for immediate suspension of concreting operations.

3.2 POLYETHYLENE FILM CURING

A. Immediately after finishing surface, and after concrete has taken its initial set, apply water in form of fine spray. Cover surface with polyethylene film so film will remain in direct contact with surface during specified curing period.

B. Cover entire surface and both edges of pavement slab. Overlap joints in film sheets minimum of 12 inches. Immediately repair tears or holes occurring during curing period by placing acceptable moisture-proof patches or replacing.

3.3 WATERPROOFED PAPER CURING

A. Immediately after finishing surface, and after concrete has taken its initial set, apply water in form of fine spray. Cover surface with waterproofed paper so paper will remain in direct contact with surface during specified curing period.

B. Prepare waterproofed paper to form blankets of sufficient width to cover entire surface and both edges of pavement slab, and not be more than 60 feet in length. Overlap joints in blankets caused by joining paper sheets not less than 5 inches and securely seal with asphalt cement having melting point of approximately 180 degrees F. Place blankets to secure overlap of at least 12 inches. Immediately repair tears or holes appearing in paper during curing period by cementing patches over defects.

3.4 COTTON MAT CURING

A. Immediately after finishing surface, and after concrete has taken its initial set, completely cover surface with cotton mats, thoroughly saturated before application, maintaining contact with surface of pavement equally at all points.

B. Keep mats on pavement for specified curing period. Keep mats saturated so that, when lightly

compressed, water will drip freely from them. Keep banked earth or cotton mat covering edges saturated.

3.5 LIQUID MEMBRANE-FORMING COMPOUNDS

A. Immediately after free surface moisture, and after concrete has dispersed, apply liquid membrane-forming compound in accordance with manufacturer's instructions.

B. Moisten concrete by water fogging prior to application of membrane when surface has become dry.

C. Seal concrete surface with single coat at rate of coverage recommended by manufacturer and directed by Project Manager, but not less than one gallon per 200 square feet of surface area.

3.6 TESTING MEMBRANE

A. Treated areas will be visually inspected for areas of lighter color of dry concrete as compared to dump concrete. Test suspected areas by placing few drops of water on surface. Membrane passes test when water stands in rounded beads or small pools which can be blown along surface of concrete without wetting surface.

END OF SECTION 03 39 00

SECTION 03 47 13 - TILT-UP CONCRETE

1.1 SUMMARY

A. Section includes load-bearing, tilt-up concrete, monolithic panels.

1.2 PREINSTALLATION MEETINGS

A. Preinstallation Conference: Conduct conference at Project site.

1.3 ACTION SUBMITTALS

A. Product Data: For each type of product.
   1.

B. Design Mixtures: For each concrete mixture.

C. Shop Drawings: Detail fabrication and installation of tilt-up concrete units. Indicate panel locations, plans, elevations, dimensions, shapes, cross sections, and details of steel embedments.

   1. Include steel reinforcement, detailing fabrication, bending, and placing.
   2. Include additional steel reinforcement to resist hoisting and erection stresses.
   3. Include locations and details of hoisting points and lifting devices for handling and erection.

1.4 INFORMATIONAL SUBMITTALS

A. Welding certificates.

B. Material certificates.

C. Material test reports.

D. Field quality-control reports.

1.5 QUALITY ASSURANCE

A. Manufacturer Qualifications: A firm experienced in manufacturing ready-mixed concrete products and that complies with ASTM C 94/C 94M requirements for production facilities and equipment.

   1. Manufacturer certified according to NRMCA's "Certification of Ready Mixed Concrete Production Facilities."

B. Installer Qualifications: A qualified installer who employs a supervisor on Project who is an ACI-certified Tilt-up Supervisor.

C. Testing Agency Qualifications: An independent agency, acceptable to authorities having jurisdiction, qualified according to ASTM C 1077 and ASTM E 329 for testing indicated.

D. Welding Qualifications: Qualify procedures and personnel according to the following:

1. AWS D1.1/D1.1M.
2. AWS D1.4/D1.4M.

E. Mockups: Cast and erect tilt-up concrete panel mockups to demonstrate typical reveals, surface finishes, texture, color, and standard of workmanship.

1. Build mockup panels in the location and of the size indicated or, if not indicated, as directed by Architect.
2. Subject to compliance with requirements, approved mockups may become part of the completed Work if undisturbed at time of Substantial Completion.

1.6 PRECONSTRUCTION TESTING

A. Preconstruction Testing Service: Engage a qualified independent testing agency to perform preconstruction testing on concrete mixtures.

PART 2 - PRODUCTS

2.1 TILT-UP CONCRETE

A. Comply with ACI 301, unless modified by requirements in the Contract Documents.

2.2 FORMS AND ACCESSORIES

A. Forms: Metal, dressed lumber, or other approved materials that are nonreactive with concrete and that will provide continuous, true, and smooth concrete surfaces.

B. Chamfer Strips: Wood, metal, PVC, or rubber strips, 3/4 by 3/4 inch.

C. Form Liners: Units of face design, texture, arrangement, and configuration indicated. Furnish with manufacturer's recommended liquid-release agent that will not bond with, stain, or adversely affect concrete surfaces and will not impair subsequent surface treatments of concrete.

D. Reveal Strips: Metal, PVC, rubber, straight dressed wood, or plywood; with sides kerfed.

2.3 STEEL REINFORCEMENT

A. Reinforcing Bars: ASTM A 615/A 615M, Grade 60, deformed.

B. Plain-Steel Wire: ASTM A 82/A 82M, as drawn.

C. Plain-Steel Welded-Wire Reinforcement: ASTM A 185/A 185M, fabricated from as-drawn steel wire into flat sheets.

D. Deformed-Steel Welded-Wire Reinforcement: ASTM A 497/A 497M, flat sheet.

E. Bar Supports: Manufactured according to CRSI's "Manual of Standard Practice" of plastic or CRSI Class 1 plastic-protected steel wire or Class 2 stainless-steel wire.

2.4 CONCRETE MATERIALS

A. Cementitious Material:

1. Portland Cement: ASTM C 150/C 150M, Type I/II, gray.

B. Coarse Aggregate: ASTM C 33/C 33M, coarse aggregate or better, graded. Provide aggregates from single source with documented service record data of at least 10 years' satisfactory service in similar applications and service conditions using similar aggregates and cementitious materials.

1. Maximum Coarse-Aggregate Size: 1 inch nominal.

C. Fine Aggregate: ASTM C 33/C 33M, manufactured or natural sand, from same source for Project, free of materials with deleterious reactivity to alkali in cement.

D. Air-Entraining Admixture: ASTM C 260/C 260M.

E. Chemical Admixtures: Certified by manufacturer to be compatible with other admixtures and that do not contribute water-soluble chloride ions exceeding those permitted in hardened concrete. Do not use calcium chloride or admixtures containing calcium chloride.

1. Water-Reducing Admixture: ASTM C 494/C 494M, Type A.
2. Retarding Admixture: ASTM C 494/C 494M, Type B.
3. Water-Reducing and Retarding Admixture: ASTM C 494/C 494M, Type D.
4. High-Range, Water-Reducing Admixture: ASTM C 494/C 494M, Type F.
5. High-Range, Water-Reducing and Retarding Admixture: ASTM C 494/C 494M, Type G.
6. Plasticizing and Retarding Admixture: ASTM C 1017/C 1017M, Type II.

F. Water: ASTM C 94/C 94M and potable.

2.5 BOND BREAKERS

A. Waterborne, Membrane-Forming Bond breaker: Dissipating polymerized emulsion containing no oils, waxes, paraffins, or silicones, and compatible with casting-slab curing compound.

1. Manufacturers: Subject to compliance with requirements, available manufacturers offering products that may be incorporated into the Work include, but are not limited to the following:

a. Dayton Superior.

b. Vexcon Chemicals Inc.

2.6 CURING MATERIALS

A. Evaporation Retarder: Waterborne, monomolecular film forming; manufactured for application to fresh concrete.

B. Absorptive Cover: AASHTO M 182, Class 2, burlap cloth made from jute or kenaf, weighing approximately 9 oz./sq. yd. when dry.

C. Moisture-Retaining Cover: ASTM C 171, polyethylene film or white burlap-polyethylene sheet.

D. Clear, Waterborne, Membrane-Forming Curing Compound: ASTM C 309, Type 1, Class B.

2.7 CONNECTION MATERIALS

A. Embedded Metal Items and Loose Hardware: Comply with Section 055000 "Metal Fabrications" for materials for securing tilt-up concrete panels together and to supporting and adjacent construction.

B. Loose Hardware: Comply with Section 055000 "Metal Fabrications" for materials for securing tilt-up concrete panels together and to supporting and adjacent construction.

C. Carbon-Steel Shapes and Plates: ASTM A 36/A 36M.

D. Carbon-Steel Bolts and Studs: ASTM A 307, Grade A; carbon-steel, hex-head bolts and studs; carbon-steel nuts; and flat, unhardened steel washers.

E. Unheaded Carbon-Steel Rods and Nuts: ASTM A 36/A 36M, threaded rods with ASTM A 563, nuts.

F. Welded Headed Studs: AWS D1.1/D1.1M, Type B headed studs, and cold-finished, carbon-steel bars.

G. Chord Bar Sleeves: Tubular sheathing, plastic or moisture-resistance-treated cardboard.

H. Welding Electrodes: Comply with AWS standards.

I. Hot-Dip Galvanized Finish: Apply zinc coating to steel connections by hot-dip process, complying with ASTM A 123/A 123M or ASTM A 153/A 153M as applicable.

1. Zinc Repair Paint: SSPC-Paint 20.

2.8 ES

A. Furnish inserts, dowels, bolts, nuts, washers, and other items to be cast in panels for tilting and lifting.

1. Manufacture inserts with feet of plastic, galvanized-steel wire, plastic-tipped steel wire, or stainless-steel-tipped steel wire.

B. Furnish brace anchors and other accessories to be cast in panels and in casting slab for attaching bracing.

1. Manufacture wall brace anchors and accessories with feet of galvanized-steel wire, plastic-tipped steel wire, or stainless-steel-tipped steel wire.
2. Manufacture floor brace anchors that do not penetrate vapor retarder under slab-on-grade.

2.9 BEARING PADS

A. Elastomeric Pads: AASHTO M 251, plain, vulcanized, 100 percent polychloroprene (neoprene) elastomer, molded to size or cut from a molded sheet; Type A Shore durometer hardness of 50 to 70, ASTM D 2240; and minimum tensile strength of 2250 psi, ASTM D 412.

B. Random, Fiber-Reinforced Elastomeric Pads: Preformed, randomly oriented synthetic fibers set in elastomer with a Type A Shore durometer hardness of 70 to 90, ASTM D 2240.

C. Cotton-Duck-Fabric-Reinforced Elastomeric Pads: Preformed, horizontally layered cotton-duck fabric bonded in elastomer with a Type A Shore durometer hardness of 80 to 100, ASTM D 2240.

D. High-Density Plastic Strips: Multimonomer, nonleaching plastic.

2.10 GROUT

A. Cement Grout: Portland cement, ASTM C 150/C 150M, Type I, and clean, natural sand, ASTM C 404. Mix at ratio of 1 part cement to 2-1/2 parts sand, by volume, with minimum water required for placement and hydration.

B. Nonmetallic, Nonshrink Grout: Premixed, nonmetallic, noncorrosive, nonstaining grout containing selected silica sands, portland cement, shrinkage-compensating agents, and plasticizing and water-reducing agents; complying with ASTM C 1107, of consistency suitable for application.

2.11 CONCRETE MIXTURES

A. Prepare design mixtures for each type and strength of concrete, proportioned on basis of laboratory trial mixture or field test data, or both, according to ACI 301.

1. Use a qualified independent testing agency for preparing and reporting proposed concrete design mixtures based on laboratory trial mixtures.

B. Proportion concrete mixture as follows:

1. Minimum Compressive Strength: 4000 psi at 28 days.
2. Maximum W/C Ratio: 0.45.

3. Slump Limit: 4 inches, plus or minus 1 inch.

C. Admixtures: Use admixtures according to manufacturer's written instructions.

2.12 CONCRETE MIXING

A. Ready-Mixed Concrete: Measure, batch, mix, and deliver concrete according to ASTM C 94/C 94M, and furnish batch ticket information.

PART 3 - EXECUTION

3.1 FORMWORK INSTALLATION

A. Construct and brace formwork so tilt-up concrete panels are of size, shape, alignment, elevation, and position indicated.

1. Place form liners accurately to provide finished surface texture indicated. Provide solid backing and supports to maintain stability of liners during concreting. Coat form liner with form-release agent.

3.2 BOND BREAKER INSTALLATION

A. Uniformly and continuously apply two coats of bond breaker to casting-slab surfaces by power spray or roller according to manufacturer's written instructions, before placing steel reinforcement. Recoat areas subjected to moisture before drying. Maintain continuity of coating until concrete placement.

B. After placing steel reinforcement, touch up or recoat worn or damaged areas with bond breaker. Do not splash or coat steel reinforcement and inserts.

3.3 REINFORCEMENT AND INSERT INSTALLATION

A. General: Comply with CRSI's "Manual of Standard Practice" for fabricating and placing reinforcement.

B. Accurately position, support, and secure reinforcement against displacement. Locate and support reinforcement with bar supports to maintain minimum concrete cover.

C. Accurately place and securely support embedded items, anchorages, inserts, cramps, retainers, bar chords and sleeves, and other items to be built into panels. Coordinate with other trades for installing cast-in items.

3.4 PANEL CASTING, GENERAL

A. Comply with ACI 301 for handling, placing, and consolidating concrete.

B. Screed panel surfaces to correct level with a straightedge and strike off.

1. Begin initial floating before excess moisture or bleedwater appears on the surface. Use bull floats or darbies to form a uniform and open-textured surface plane free of humps or hollows. Do not disturb panel surfaces before beginning finishing operations.

C. Form chamfers at top edges of panel perimeters, openings, and similar locations not formed by chamfer strips unless otherwise indicated.

D. Surface Defects: Limit visible surface defects to those permitted by TCA's "Tilt-up Concrete Association's Guideline Specifications" for Grade A, Architectural panel surfaces.

3.5 CASTING TOLERANCES

A. Cast tilt-up concrete panels without exceeding the tolerances of TCA's "Tilt-up Concrete Association's Guideline Specifications."

3.6 FACE-DOWN FINISHES

A. Smooth, As-Cast Finish: Cast panel to produce a surface free of pockets, sand streaks, and honeycombs. Produce a surface appearance of uniform color and texture.

B. Form-Liner Finish: Cast panel over form liners placed, secured, and sealed over casting slab to produce a textured surface free of pockets, streaks, and honeycombs. Produce a surface appearance of uniform color and texture.

3.7 CONCRETE PROTECTING AND CURING

A. Protect freshly placed concrete from premature drying and excessive cold or hot temperatures according to ACI 301.

1. Apply evaporation retarder in hot, dry, or windy weather to protect concrete from rapid moisture loss before and during finishing operations. Apply according to manufacturer's written instructions after screeding and bull floating concrete, but before float finishing.

B. Begin curing immediately after finishing concrete. Cure by one or a combination of the following methods according to ACI 308.1:

1. Moisture Curing: Keep surfaces continuously moist for no fewer than seven days.
2. Moisture-Retaining-Cover Curing: Cover concrete surfaces with moisture-retaining cover. Cure for no fewer than seven days.
3. Curing Compound: Apply uniformly in continuous operation by power spray or roller according to manufacturer's written instructions.

3.8 ERECTION

A. Use erection equipment with care to prevent damage to floor slabs and panels.

B. Lift, support, and erect panels only at designated lifting or supporting points indicated on Shop Drawings.

C. Do not erect panels until 75 percent of 28-day compressive strength of concrete has been verified.

D. Install tilt-up concrete panels level, plumb, square, and true. Place panels on leveled grout-setting pads or shims in correct position. Maintain joint width of 3/4 inch between panels.

1. Install tilt-up concrete panels with face-down surfaces exposed to exterior of building.

E. Temporarily brace and support panels securely in position against loads comparable in intensity to those for which structure was designed. Maintain braces and supports in place, undisturbed, until entire integrated supporting structure has been completed and permanent connections to panels are secured.

F. Anchor panels in place and, if indicated, to one another.

1. Weld steel connectors to steel supports and embedments indicated, complying with AWS D1.1/D1.1M.

G. Solidly grout-fill gaps between foundation system and bottom of panels.

3.9 FIELD QUALITY CONTROL

A. Special Inspections: Owner will engage a special inspector and qualified testing and inspecting agency to perform tests and inspections and prepare test reports.

B. Testing Agency: Engage a qualified testing agency to perform tests and inspections and to submit reports.

C. Inspections:

1. Steel reinforcement placement.
2. Steel reinforcement welding.
3. Headed bolts and studs.
4. Verification of use of required design mixture.
5. Concrete placement, including conveying and depositing.
6. Curing procedures and maintenance of curing temperature.
7. Verification of concrete strength before erection of tilt-up panels.

D. Testing Services: Tests shall be performed according to ACI 301.

E. Tilt-up concrete panels will be considered defective if they do not pass tests and inspections.

3.10 ERECTION TOLERANCES

A. Install tilt-up concrete panels without exceeding the erection tolerances in TCA's "Tilt-up Concrete Association's Guideline Specifications."

3.11 FILLING AND REPAIR

A. Patch holes and voids left by erecting and bracing inserts on tilt-up panels and slabs-on-grade. Cut or chip edges of voids perpendicular to concrete surface. Fill blockouts where indicated.

1. Clean, dampen with water, and brush-coat holes, voids, and blockouts with bonding agent. Fill and compact with patching mortar of a stiff consistency before bonding agent has dried.

B. Repair damaged galvanized-steel surfaces of connectors by cleaning and applying a coat of zinc repair paint.

C. Repair damage to tilt-up panels and slabs-on-grade resulting from tilt-up work, as directed by Architect.

D. Remove and replace tilt-up panels that do not comply with requirements in this Section.

END OF SECTION 03 47 13

SECTION 04 20 00 - UNIT MASONRY

PART 1 - GENERAL

1.1 SUMMARY

A. Section Includes:
1. Concrete masonry units.
2. Mortar and grout.
3. Steel reinforcing bars.
4. Masonry joint reinforcement.
5. Miscellaneous masonry accessories.
6. Concrete coping.

1.2 DEFINITIONS

A. CMU(s): Concrete masonry unit(s).

B. Reinforced Masonry: Masonry containing reinforcing steel in grouted cells.

1.3 ACTION SUBMITTALS

A. Product Data: For each type of product.

B. Shop Drawings: For reinforcing steel. Detail bending, lap lengths, and placement of unit masonry reinforcing bars. Comply with ACI 315.

C. Fabricated Flashing: Detail corner units, end-dam units, and other special applications.

1.4 INFORMATIONAL SUBMITTALS

A. Material Certificates: For each type and size of product. For masonry units, include data on material properties, material test reports substantiating compliance with requirements.

B. Mix Designs: For each type of mortar and grout. Include description of type and proportions of ingredients.
1. Include test reports for mortar mixes required to comply with property specification. Test according to ASTM C 109/C 109M for compressive strength, ASTM C 1506 for water retention, and ASTM C 91/C 91M for air content.
2. Include test reports, according to ASTM C 1019, for grout mixes required to comply with compressive strength requirement.

1.5 FIELD CONDITIONS

A. Hot-Weather Requirements: Comply with hot-weather construction requirements contained in TMS 602/ACI 530.1/ASCE 6.

PART 2 - PRODUCTS

2.1 UNIT MASONRY, GENERAL

A. Masonry Standard: Comply with TMS 602/ACI 530.1/ASCE 6, except as modified by requirements in the Contract Documents.

B. Defective Units: Referenced masonry unit standards may allow a certain percentage of units to contain chips, cracks, or other defects exceeding limits stated. Do not use units where such defects are exposed in the completed Work.

2.2 CONCRETE MASONRY UNITS

A. Shapes: Provide shapes indicated and as follows, with exposed surfaces matching exposed faces of adjacent units unless otherwise indicated.
   1. Provide special shapes for lintels, corners, and other special conditions.

B. CMUs: ASTM C 90.
   1. Unit Compressive Strength: Provide units with minimum average net-area compressive strength of 3050 psi.
   2. Density Classification: Normal weight.

2.3 CONCRETE COPING

A. Concrete Coping: ASTM C 1623, matching CMUs in color, texture, and density classification; and with reinforcing bars indicated.

2.4 MORTAR AND GROUT MATERIALS

A. Portland Cement: ASTM C 150/C 150M, Type I or II, except Type III may be used for cold-weather construction. Provide natural color.

B. Portland Cement-Lime Mix: Packaged blend of Portland cement and hydrated lime containing no other ingredients.

C. Masonry Cement: ASTM C 91/C 91M.

D. Aggregate for Grout: ASTM C 404.

E. Water: Potable.

2.5 REINFORCEMENT

A. Uncoated-Steel Reinforcing Bars: ASTM A 615/A 615M or ASTM A 996/A 996M, Grade 60.

B. Masonry-Joint Reinforcement, General: ASTM A 951/A 951M.
   1. Exterior Walls: Hot-dip galvanized carbon steel.
   2. Wire Size for Side Rods: 0.148-inch diameter.
   3. Wire Size for Cross Rods: 0.148-inch diameter.
   4. Spacing of Cross Rods, Tabs, and Cross Ties: Not more than 16 inches o.c.
   5. Provide in lengths of not less than 10 feet, with prefabricated corner units.

C. Masonry-Joint Reinforcement for Single-Wythe Masonry: Ladder type with single pair of side rods.

2.6 EMBEDDED FLASHING MATERIALS

A. Flexible Flashing: the following unless otherwise indicated:
   1. EPDM Flashing: Sheet flashing product made from ethylene-propylene-diene terpolymer, complying with ASTM D 4637/D 4637M, 40 MIL thick.
      a. Basis of design: Holman & Barnard, Inc., EPRA-Max EPOM thru-wall flashing or Architect approved equal.

2.7 MASONRY CLEANERS

A. Proprietary Acidic Cleaner: Manufacturer's standard-strength cleaner designed for removing mortar/grout stains, efflorescence, and other new construction stains from new masonry without discoloring or damaging masonry surfaces. Use product expressly approved for intended use by cleaner manufacturer and manufacturer of masonry units being cleaned.
   1. Basis of Design: Sure Klean, Custom Masonry Cleaner or Architects approved equal.

2.8 MORTAR AND GROUT MIXES

A. General: Do not use admixtures, including pigments, air-entraining agents, accelerators, retarders, water-repellent agents, antifreeze compounds, or other admixtures unless otherwise indicated.
   1. Do not use calcium chloride in mortar or grout.
   2. For exterior masonry, use Portland cement-lime or masonry cement mortar.

B. Preblended, Dry Mortar Mix: Furnish dry mortar ingredients in form of a preblended mix. Measure quantities by weight to ensure accurate proportions, and thoroughly blend ingredients before delivering to Project site.

C. Mortar for Unit Masonry: Comply with ASTM C 270, Proportion Specification. Provide the following types of mortar for applications stated unless another type is indicated.
   1. For masonry below grade or in contact with earth, use Type M.
   2. For exterior, above-grade, nonload-bearing walls; use Type N.

D. Grout for Unit Masonry: Comply with ASTM C 476.
   1. Use grout of type indicated or, if not otherwise indicated, of type (fine or coarse) that will comply with TMS 602/ACI 530.1/ASCE 6 for dimensions of grout spaces and pour height.
   2. Proportion grout in accordance with ASTM C 476, Table 1 or paragraph 4.2.2 for specified 28-day compressive strength indicated, but not less than 2000 psi.
   3. Provide grout with a slump of 8 to 11 inches as measured according to ASTM C 143/C 143M.

PART 3 - EXECUTION

3.1 INSTALLATION, GENERAL

A. Use full-size units without cutting if possible. If cutting is required to provide a continuous pattern or to fit adjoining construction, cut units with motor-driven saws; provide clean, sharp, unchipped edges. Allow units to dry before laying unless wetting of units is specified. Install cut units with cut surfaces and, where possible, cut edges concealed.

3.2 TOLERANCES

A. Dimensions and Locations of Elements:
   1. For dimensions in cross section or elevation, do not vary by more than plus 1/2 inch or minus 1/4 inch.
   2. For location of elements in plan, do not vary from that indicated by more than plus or minus 1/2 inch.
   3. For location of elements in elevation, do not vary from that indicated by more than plus or minus 1/4 inch in a story height or 1/2 inch total.

B. Lines and Levels:
   1. For bed joints and top surfaces of walls, do not vary from level by more than 1/4 inch in 10 feet, or 1/2-inch maximum.
   2. For vertical lines and surfaces, do not vary from plumb by more than 1/4 inch in 10 feet, 3/8 inch in 20 feet, or 1/2-inch maximum.
   3. For conspicuous vertical lines, such as external corners, do not vary from plumb by more than 1/8 inch in 10 feet, 1/4 inch in 20 feet, or 1/2-inch maximum.
   4. For lines and surfaces, do not vary from straight by more than 1/4 inch in 10 feet, 3/8 inch in 20 feet, or 1/2-inch maximum.

C. Joints:
   1. For bed joints, do not vary from thickness indicated by more than plus or minus 1/8 inch, with a maximum thickness limited to 1/2 inch.

3.3 LAYING MASONRY WALLS

A. Lay out walls in advance for accurate spacing of surface bond patterns with uniform joint thicknesses. Avoid using less-than-half-size units, particularly at corners, where possible.

B. Bond Pattern for Exposed Masonry: Unless otherwise indicated, lay exposed masonry in running bond; do not use units with less-than-nominal 4-inch horizontal face dimensions at corners or jambs.

C. Built-in Work: As construction progresses, build in items specified in this and other Sections. Fill in solidly with masonry around built-in items.

3.4 MORTAR BEDDING AND JOINTING

A. Lay CMUs as follows:
   1. Bed face shells in mortar and make head joints of depth equal to bed joints.
   2. Bed webs in mortar in grouted masonry, including starting course on footings.
   3. Fully bed entire units, including areas under cells, at starting course on footings where cells are not grouted.

B. Lay solid masonry units with completely filled bed and head joints; butter ends with sufficient mortar to fill head joints and shove into place. Do not deeply furrow bed joints or slush head joints.

C. Cut joints flush for masonry walls to receive direct-applied finishes unless otherwise indicated.

3.5 MASONRY-JOINT REINFORCEMENT

A. General: Install entire length of longitudinal side rods in mortar with a minimum cover of 5/8 inch on exterior side of walls. Lap reinforcement a minimum of 6 inches.
   1. Space reinforcement not more than 16 inches o.c.
   2. Space reinforcement not more than 8 inches o.c. in foundation walls.

B. Provide continuity at corners by using prefabricated L-shaped units.

3.6 FLASHING

A. General: Install embedded flashing in masonry where indicated.

B. Install flashing as follows unless otherwise indicated:
   1. Prepare masonry surfaces so they are smooth and free from projections that could puncture flashing. Where flashing is within mortar joint, place through-wall flashing on sloping bed of mortar and cover with mortar. Before covering with mortar, seal penetrations in flashing with adhesive, sealant, or tape.

3.7 REINFORCED UNIT MASONRY INSTALLATION

A. Placing Reinforcement: Comply with requirements in TMS 602/ACI 530.1/ASCE 6.

B. Grouting: Do not place grout until entire height of masonry to be grouted has attained enough strength to resist grout pressure.
   1. Comply with requirements in TMS 602/ACI 530.1/ASCE 6 for cleanouts and for grout placement, including minimum grout space and maximum pour height.
   2. Limit height of vertical grout pours to not more than 60 inches.

3.8 REPAIRING, POINTING, AND CLEANING

A. In-Progress Cleaning: Clean unit masonry as work progresses by dry brushing to remove mortar fins and smears before tooling joints.

B. Final Cleaning: After mortar is thoroughly set and cured, clean exposed masonry as follows:
   1. Remove large mortar particles by hand with wooden paddles and nonmetallic scrape hoes or chisels.
   2. Protect adjacent surfaces from contact with cleaner.
   3. Wet wall surfaces with water before applying cleaners; remove cleaners promptly by rinsing surfaces thoroughly with clear water.
   4. Clean masonry with a proprietary acidic cleaner applied according to manufacturer's written instructions.

3.9 MASONRY WASTE DISPOSAL

A. Excess Masonry Waste: Remove excess masonry waste that cannot be used as fill, as described above or recycled, and other masonry waste, and legally dispose of off Owner's property.

END OF SECTION 042000

SECTION 05 12 00 - STRUCTURAL STEEL FRAMING

PART 1 - GENERAL

1.1 SUMMARY

A. Section Includes:

1. Structural steel.
2. Grout.

1.2 DEFINITIONS

A. Structural Steel: Elements of the structural frame indicated on Drawings and as described in AISC 303, "Code of Standard Practice for Steel Buildings and Bridges."

1.3 PREINSTALLATION MEETINGS

A. Preinstallation Conference: Conduct conference at Project site.

1.4 ACTION SUBMITTALS

A. Product Data: For each type of product.

B. Shop Drawings: Show fabrication of structural-steel components.

1.5 INFORMATIONAL SUBMITTALS

A. Qualification Data: For installer and fabricator.

B. Welding certificates.

C. Mill test reports for structural steel, including chemical and physical properties.

D. Source quality-control reports.

E. Field quality-control and special inspection reports.

1.6 QUALITY ASSURANCE

A. Fabricator Qualifications: A qualified fabricator that participates in the AISC Quality Certification Program and is designated an AISC-Certified Plant, Category STD.

B. Welding Qualifications: Qualify procedures and personnel according to AWS D1.1/D1.1M, "Structural Welding Code - Steel."

C. Comply with applicable provisions of the following specifications and documents:

1. AISC 303.
2. AISC 360.
3. RCSC's "Specification for Structural Joints Using ASTM A 325 or A 490 Bolts."

PART 2 - PRODUCTS

2.1 PERFORMANCE REQUIREMENTS

A. Connections: Provide details of simple shear connections required by the Contract Documents to be selected or completed by structural-steel fabricator to withstand loads indicated and comply with other information and restrictions indicated.

1. Select and complete connections using schematic details indicated and AISC 360.
2. Use Load and Resistance Factor Design; data are given at factored-load level.

B. Moment Connections: Type FR, fully restrained.

C. Construction: Combined system of braced frame and shear walls.

2.2 STRUCTURAL-STEEL MATERIALS

A.

B. W-Shapes: ASTM A 992/A 992M or ASTM A 572/A 572M, Grade 50.

C. Channels, Angles: ASTM A 36/A 36M.

D. Plate and Bar: ASTM A 36/A 36M or ASTM A 572/A 572M, Grade 50.

E. Cold-Formed Hollow Structural Sections: ASTM A 500/A 500M, Grade B, structural tubing.

F. Steel Pipe: ASTM A 53/A 53M, Type E or Type S, Grade B.

G. Welding Electrodes: Comply with AWS requirements.

2.3 BOLTS, CONNECTORS, AND ANCHORS

A. High-Strength Bolts, Nuts, and Washers: ASTM A 325, Type 1, heavy-hex steel structural bolts; ASTM A 563, Grade C, heavy-hex carbon-steel nuts; and ASTM F 436, Type 1, hardened carbon-steel washers; all with plain finish.

1. Direct-Tension Indicators: ASTM F 959, Type 325, compressible-washer type with plain finish.

B. Zinc-Coated High-Strength Bolts, Nuts, and Washers: ASTM A 325, Type 1, heavy-hex steel structural bolts; ASTM A 563, Grade DH heavy-hex carbon-steel nuts; and ASTM F 436, Type 1, hardened carbon-steel washers.

1. Finish: Hot-dip or mechanically deposited zinc coating.
2. Direct-Tension Indicators: ASTM F 959, Type 325, compressible-washer type with mechanically deposited zinc coating finish.

C. Tension-Control, High-Strength Bolt-Nut-Washer Assemblies: ASTM F 1852, Type 1, heavy-hex head assemblies consisting of steel structural bolts with splined ends, heavy-hex carbon-steel nuts, and hardened carbon-steel washers.

1. Finish: Mechanically deposited zinc coating.

D. Headed or Unheaded Anchor Rods: ASTM F 1554, Grade 36.

1. Configuration: Straight.
2. Finish: Plain.

E. Threaded Rods: ASTM A 36/A 36M.

1. Finish: Plain.

2.4 PRIMER

A. Primer: Comply with Section 099113 "Exterior Painting," Section 099123 "Interior Painting," and Section 099600 "High-Performance Coatings."

2.5 GROUT

A. Nonmetallic, Shrinkage-Resistant Grout: ASTM C 1107/C 1107M, factory-packaged, nonmetallic aggregate grout, noncorrosive and nonstaining, mixed with water to consistency suitable for application and a 30-minute working time.

2.6 FABRICATION

A. Structural Steel: Fabricate and assemble in shop to greatest extent possible. Fabricate according to AISC 303, "Code of Standard Practice for Steel Buildings and Bridges," and to AISC 360.

2.7 SHOP CONNECTIONS

A. High-Strength Bolts: Shop install high-strength bolts according to RCSC's "Specification for Structural Joints Using ASTM A 325 or A 490 Bolts" for type of bolt and type of joint specified.

1. Joint Type: Snug tightened, unless otherwise noted.

B. Weld Connections: Comply with AWS D1.1/D1.1M for tolerances, appearances, welding procedure specifications, weld quality, and methods used in correcting welding work.

2.8 SHOP PRIMING

A. Shop prime steel surfaces except the following:

1. Surfaces embedded in concrete or mortar. Extend priming of partially embedded members to a depth of 2 inches.
2. Surfaces to be field welded.
3. Surfaces of high-strength bolted, slip-critical connections.
4. Surfaces to receive sprayed fire-resistive materials (applied fireproofing).
5. Galvanized surfaces.
6. Surfaces enclosed in interior construction.

B. Surface Preparation: Clean surfaces to be painted. Remove loose rust and mill scale and spatter, slag, or flux deposits. Prepare surfaces according to the following specifications and standards:

1. SSPC-SP 2, "Hand Tool Cleaning."
2. SSPC-SP 3, "Power Tool Cleaning."
3. SSPC-SP 7/NACE No. 4, "Brush-off Blast Cleaning."

C. Priming: Immediately after surface preparation, apply primer according to manufacturer's written instructions and at rate recommended by SSPC to provide a minimum dry film thickness of 1.5 mils. Use priming methods that result in full coverage of joints, corners, edges, and exposed surfaces.

2.9 SOURCE QUALITY CONTROL

A. Testing Agency: Owner will engage a qualified testing agency to perform shop tests and inspections.

1. Provide testing agency with access to places where structural-steel work is being fabricated or produced to perform tests and inspections.

B. Bolted Connections: Inspect shop-bolted connections according to RCSC's "Specification for Structural Joints Using ASTM A 325 or A 490 Bolts."

C. Welded Connections: Visually inspect shop-welded connections according to AWS D1.1/D1.1M and the following inspection procedures, at testing agency's option:

1. Liquid Penetrant Inspection: ASTM E 165.
2. Magnetic Particle Inspection: ASTM E 709; performed on root pass and on finished weld. Cracks or zones of incomplete fusion or penetration are not accepted.
3. Ultrasonic Inspection: ASTM E 164.
4. Radiographic Inspection: ASTM E 94.

D. Prepare test and inspection reports.

PART 3 - EXECUTION

3.1 EXAMINATION

A. Verify, with certified steel erector present, elevations of concrete- and masonry-bearing surfaces and locations of anchor rods, bearing plates, and other embedments for compliance with requirements.

B. Proceed with installation only after unsatisfactory conditions have been corrected.

3.2 ERECTION

A. Set structural steel accurately in locations and to elevations indicated and according to AISC 303 and AISC 360.

B. Baseplates Bearing Plates and Leveling Plates: Clean concrete- and masonry-bearing surfaces of bond-reducing materials, and roughen surfaces prior to setting plates. Clean bottom surface of plates.

1. Set plates for structural members on wedges, shims, or setting nuts as required.
2. Weld plate washers to top of baseplate.
3. Snug-tighten anchor rods after supported members have been positioned and plumbed. Do not remove wedges or shims but, if protruding, cut off flush with edge of plate before packing with grout.
4. Promptly pack grout solidly between bearing surfaces and plates so no voids remain. Neatly finish exposed surfaces; protect grout and allow to cure. Comply with manufacturer's written installation instructions for shrinkage-resistant grouts.

C. Maintain erection tolerances of structural steel within AISC 303, "Code of Standard Practice for Steel Buildings and Bridges."

3.3 FIELD CONNECTIONS

A. High-Strength Bolts: Install high-strength bolts according to RCSC's "Specification for Structural Joints Using ASTM A 325 or A 490 Bolts" for type of bolt and type of joint specified.

1. Joint Type: Snug tightened, unless otherwise indicated.

B. Weld Connections: Comply with AWS D1.1/D1.1M for tolerances, appearances, welding procedure specifications, weld quality, and methods used in correcting welding work.

1. Comply with AISC 303 and AISC 360 for bearing, alignment, adequacy of temporary connections, and removal of paint on surfaces adjacent to field welds.
2. Remove backing bars or runoff tabs where indicated, back gouge, and grind steel smooth.
3. Assemble and weld built-up sections by methods that maintain true alignment of axes without exceeding tolerances in AISC 303, "Code of Standard Practice for Steel Buildings and Bridges," for mill material.

3.4 FIELD QUALITY CONTROL

A. Special Inspections: Owner will engage a qualified special inspector to perform the following special inspections:

1. Verify structural-steel materials and inspect steel frame joint details.
2. Verify weld materials and inspect welds.
3. Verify connection materials and inspect high-strength bolted connections.

B. Testing Agency: Owner will engage a qualified testing agency to perform tests and inspections.

C. Bolted Connections: Inspect and test bolted connections according to RCSC's "Specification for Structural Joints Using ASTM A 325 or A 490 Bolts."

D. Welded Connections: Visually inspect field welds according to AWS D1.1/D1.1M.

1. In addition to visual inspection, test and inspect field welds according to AWS D1.1/D1.1M and the following inspection procedures, at testing agency's option:

a. Liquid Penetrant Inspection: ASTM E 165.
b. Magnetic Particle Inspection: ASTM E 709; performed on root pass and on finished weld. Cracks or zones of incomplete fusion or penetration are not accepted.
c. Ultrasonic Inspection: ASTM E 164.
d. Radiographic Inspection: ASTM E 94.

END OF SECTION 05 12 00

SECTION 05 21 00 - STEEL JOIST FRAMING

PART 1 - GENERAL

1.1 SUMMARY

A. Section Includes:

1. K-series steel joists.
2. K-series steel joist substitutes.
3. Joist girders.
4. Joist accessories.

1.2 ACTION SUBMITTALS

A. Product Data: For each type of joist, accessory, and product.

B. Shop Drawings:

1. Include layout, designation, number, type, location, and spacing of joists.
2. Include joining and anchorage details, bracing, bridging, and joist accessories; splice and connection locations and details; and attachments to other construction.

1.3 INFORMATIONAL SUBMITTALS

A. Welding certificates.

B. Manufacturer certificates.

C. Mill Certificates: For each type of bolt.

1.4 QUALITY ASSURANCE

A. Manufacturer Qualifications: A manufacturer certified by SJI to manufacture joists complying with applicable standard specifications and load tables in SJI's "Specifications."

1. Manufacturer's responsibilities include providing professional engineering services for designing special joists to comply with performance requirements.

B. Welding Qualifications: Qualify field-welding procedures and personnel according to AWS D1.1/D1.1M, "Structural Welding Code - Steel."

1.5 DELIVERY, STORAGE, AND HANDLING

A. Deliver, store, and handle joists as recommended in SJI's "Specifications."

PART 2 - PRODUCTS

2.1 K-SERIES STEEL JOISTS

A. Manufacture steel joists of type indicated according to "Standard Specifications for Open Web Steel Joists, K-Series" in SJI's "Specifications," with steel-angle top- and bottom-chord members, underslung ends, and parallel top chord.

B. Steel Joist Substitutes: Manufacture according to "Standard Specifications for Open Web Steel Joists, K-Series" in SJI's "Specifications," with steel-angle or -channel members.

2.2 JOIST GIRDERS

A. Manufacture joist girders according to "Standard Specifications for Joist Girders" in SJI's "Specifications," with steel-angle top- and bottom-chord members; with end and top-chord arrangements as indicated.

2.3 PRIMERS

A. Low-Emitting Materials: Paints and coatings shall comply with the testing and product requirements of the California Department of Health Services' "Standard Practice for the Testing of Volatile Organic Emissions from Various Sources Using Small-Scale Environmental Chambers."

B. Primer: SSPC-Paint 15, or manufacturer's standard shop primer complying with performance requirements in SSPC-Paint 15.

C. Primer: Provide shop primer that complies with Section 09 91 23 "Interior Painting."

2.4 JOIST ACCESSORIES

A. Bridging: Provide bridging anchors and number of rows of horizontal or diagonal bridging of material, size, and type required by SJI's "Specifications" for type of joist, chord size, spacing, and span. Furnish additional erection bridging if required for stability.

B. Bridging: Schematically indicated. Detail and fabricate according to SJI's "Specifications." Furnish additional erection bridging if required for stability.

C. Furnish ceiling extensions, either extended bottom-chord elements or a separate extension unit of enough strength to support ceiling construction. Extend ends to within 1/2 inch of finished wall surface unless otherwise indicated.

D. High-Strength Bolts, Nuts, and Washers: ASTM A 325, Type 1, heavy hex steel structural bolts; ASTM A 563 heavy hex carbon-steel nuts; and ASTM F 436 hardened carbon-steel washers.

E. Furnish miscellaneous accessories including splice plates and bolts required by joist manufacturer to complete joist assembly.

2.5 CLEANING AND SHOP PAINTING

A. Clean and remove loose scale, heavy rust, and other foreign materials from fabricated joists and accessories.

B. Apply one coat of shop primer.

C. Shop priming of joists and joist accessories is specified in Section 09 91 23 "Interior Painting."

PART 3 - EXECUTION

3.1 INSTALLATION

A. Do not install joists until supporting construction is in place and secured.

B. Install joists and accessories plumb, square, and true to line; securely fasten to supporting construction according to SJI's "Specifications," joist manufacturer's written recommendations, and requirements in this Section.

1. Before installation, splice joists delivered to Project site in more than one piece.
2. Space, adjust, and align joists accurately in location before permanently fastening.
3. Install temporary bracing and erection bridging, connections, and anchors to ensure that joists are stabilized during construction.

C. Field weld joists to supporting steel bearing plates and framework. Coordinate welding sequence and procedure with placement of joists. Comply with AWS requirements and procedures for welding, appearance and quality of welds, and methods used in correcting welding work.

D. Bolt joists to supporting steel framework using high-strength structural bolts. Comply with Research Council on Structural Connection's "Specification for Structural Joints Using ASTM A 325 or ASTM A 490 Bolts" for high-strength structural bolt installation and tightening requirements.

E. Install and connect bridging concurrently with joist erection, before construction loads are applied. Anchor ends of bridging lines at top and bottom chords if terminating at walls or beams.

3.2 FIELD QUALITY CONTROL

A. Testing Agency: Owner will engage a qualified independent testing and inspecting agency to inspect field welds and bolted connections and to perform field tests and inspections and prepare test and inspection reports.

END OF SECTION 05 21 00

SECTION 053100 - STEEL DECKING

PART 1 - GENERAL

1.1 SUMMARY

A. Section Includes:

1. Roof deck.

1.2 ACTION SUBMITTALS

A. Product Data: For each type of deck, accessory, and product indicated.

B. Shop Drawings:

1. Include layout and types of deck panels, anchorage details, reinforcing channels, pans, cut deck openings, special jointing, accessories, and attachments to other construction.

1.3 INFORMATIONAL SUBMITTALS

A. Welding certificates.

B. Product certificates.

C. Evaluation reports.

D. Field quality-control reports.

1.4 QUALITY ASSURANCE

A. Testing Agency Qualifications: Qualified according to ASTM E 329 for testing indicated.

B. Welding Qualifications: Qualify procedures and personnel according to AWS D1.3, "Structural Welding Code - Sheet Steel."

1.5 DELIVERY, STORAGE, AND HANDLING

A. Protect steel deck from corrosion, deformation, and other damage during delivery, storage, and handling.

B. Stack steel deck on platforms or pallets and slope to provide drainage. Protect with a waterproof covering and ventilate to avoid condensation.

PART 2 - PRODUCTS

2.1 PERFORMANCE REQUIREMENTS

A. AISI Specifications: Comply with calculated structural characteristics of steel deck according to AISI's "North American Specification for the Design of Cold-Formed Steel Structural Members."

B.

2.2 ROOF DECK

A. Manufacturers: Subject to compliance with requirements, available manufacturers offering products that may be incorporated into the Work include, but are not limited to the following:

1. CMC Joist & Deck.
2. Epic Metals Corporation.
3. Nucor Corp.
4. Verco Decking, Inc., a Nucor company.

B. Roof Deck: Fabricate panels, without top-flange stiffening grooves, to comply with "SDI Specifications and Commentary for Steel Roof Deck," in SDI Publication No. 31, and with the following:

1. Galvanized-Steel Sheet: ASTM A 653/A 653M, Structural Steel (SS), Grade 33, G90 zinc coating.
2. Galvanized and Shop-Primed Steel Sheet: ASTM A 653/A 653M, Structural Steel (SS), Grade 33, G60 zinc coating; cleaned, pretreated, and primed with manufacturer's standard baked-on, rust-inhibitive primer.

   a. Color: Gray top surface with white underside.

3. Deck Profile: Type WR, wide rib.
4. Profile Depth: 1-1/2 inches.
5. Design Uncoated-Steel Thickness: As indicated.

2.3 ACCESSORIES

A. General: Provide manufacturer's standard accessory materials for deck that comply with requirements indicated.

B. Mechanical Fasteners: Corrosion-resistant, low-velocity, power-actuated or pneumatically driven carbon-steel fasteners; or self-drilling, self-threading screws.

C. Side-Lap Fasteners: Corrosion-resistant, hexagonal washer head; self-drilling, carbon-steel screws, No. 10 minimum diameter.

D. Flexible Closure Strips: Vulcanized, closed-cell, synthetic rubber.

E. Miscellaneous Sheet Metal Deck Accessories: Steel sheet, minimum yield strength of 33,000 psi, not less than 0.0359-inch design uncoated thickness, of same material and finish as deck; of profile indicated or required for application.

F. Flat Sump Plates: Single-piece steel sheet, 0.0747 inch thick, of same material and finish as deck. For drains, cut holes in the field.

G. Galvanizing Repair Paint: ASTM A 780.

H. Repair Paint: Manufacturer's standard rust-inhibitive primer of same color as primer.

PART 3 - EXECUTION

3.1 INSTALLATION, GENERAL

A. Install deck panels and accessories according to applicable specifications and commentary in SDI Publication No. 31, manufacturer's written instructions, and requirements in this Section.

B. Place deck panels on supporting frame and adjust to final position with ends accurately aligned and bearing on supporting frame before being permanently fastened. Do not stretch or contract side-lap interlocks.

C. Place deck panels flat and square and fasten to supporting frame without warp or deflection.

D. Cut and neatly fit deck panels and accessories around openings and other work projecting through or adjacent to deck.

E. Provide additional reinforcement and closure pieces at openings as required for strength, continuity of deck, and support of other work.

F. Comply with AWS requirements and procedures for manual shielded metal arc welding, appearance and quality of welds, and methods used for correcting welding work.

G. Mechanical fasteners may be used in lieu of welding to fasten deck. Locate mechanical fasteners and install according to deck manufacturer's written instructions.

H. Roof Sump Pans and Sump Plates: Install over openings provided in roof deck and mechanically fasten flanges to top of deck. Space mechanical fasteners not more than 12 inches apart with at least one fastener at each corner.

1. Install reinforcing channels or zees in ribs to span between supports and weld or mechanically fasten.

I. Miscellaneous Roof-Deck Accessories: Install ridge and valley plates, finish strips, end closures, and reinforcing channels according to deck manufacturer's written instructions. Weld or mechanically fasten to substrate to provide a complete deck installation.

1. Weld cover plates at changes in direction of roof-deck panels unless otherwise indicated.

J. Pour Stops and Girder Fillers: Weld steel-sheet pour stops and girder fillers to supporting structure according to SDI recommendations unless otherwise indicated.

K. Floor-Deck Closures: Weld steel-sheet column closures, cell closures, and Z-closures to deck, according to SDI recommendations, to provide tight-fitting closures at open ends of ribs and sides of deck.

3.2 FIELD QUALITY CONTROL

A. Testing Agency: Owner will engage a qualified testing agency to perform tests and inspections.

B. Field welds will be subject to inspection.

C. Testing agency will report inspection results promptly and in writing to Contractor and Architect.

D. Remove and replace work that does not comply with specified requirements.

E. Additional inspecting, at Contractor's expense, will be performed to determine compliance of corrected work with specified requirements.

3.3 PROTECTION

A. Galvanizing Repairs: Prepare and repair damaged galvanized coatings on both surfaces of deck with galvanized repair paint according to ASTM A 780 and manufacturer's written instructions.

B. Repair Painting: Wire brush and clean rust spots, welds, and abraded areas on both surfaces of prime-painted deck immediately after installation, and apply repair paint.

END OF SECTION 05 31 00

SECTION 05 50 00 - METAL FABRICATIONS

PART 1 - GENERAL

1.1 SUMMARY

A. Section Includes:
1. Miscellaneous steel framing and supports.
2. Supports for restroom vanity tops.
3. Shelf angles.
4. Metal ladders.
5. Supports for acoustical panel partitions.
6. Supports for stainless toilet compartments.
7. Miscellaneous steel trim.
8. Metal bollards.
9. Loose bearing and leveling plates.

B. Products furnished, but not installed, under this Section include the following:
1. Loose steel lintels.
2. Anchor bolts, steel pipe sleeves, slotted-channel inserts, and wedge-type inserts indicated to be cast into concrete or built into unit masonry.
3. Steel weld plates and angles for casting into concrete for applications where they are not specified in other Sections.

1.2 ACTION SUBMITTALS

A. Product Data: For the following:
1. Paint products.
2. Grout.

B. Shop Drawings: Show fabrication and installation details. **Include plans, elevations, sections, and details of metal fabrications and their connections. Show anchorage and accessory items.**

C. Delegated-Design Submittal: For ladders, including analysis data signed and sealed by the qualified professional engineer responsible for their preparation.

PART 2 - PRODUCTS

2.1 PERFORMANCE REQUIREMENTS

A. Delegated Design: Engage a qualified professional engineer, as defined in Section 014000 "Quality Requirements," to design ladders.

B. Thermal Movements: Allow for thermal movements from ambient and surface temperature changes acting on exterior metal fabrications by preventing buckling, opening of joints, overstressing of components, failure of connections, and other detrimental effects.
   1. Temperature Change: **120 deg F, ambient; 180 deg F, material surfaces**.

2.2 METALS

A. Metal Surfaces, General: Provide materials with smooth, flat surfaces unless otherwise indicated. For metal fabrications exposed to view in the completed Work, provide materials without seam marks, roller marks, rolled trade names, or blemishes.

B. Steel Plates, Shapes, and Bars: ASTM A 36/A 36M.

C. Steel Tubing: ASTM A 500/A 500M, cold-formed steel tubing.

D. Steel Pipe: ASTM A 53/A 53M, Standard Weight (Schedule 40) unless otherwise indicated.

2.3 FASTENERS

A. General: Unless otherwise indicated, provide **Type 304** stainless-steel fasteners for exterior use and zinc-plated fasteners with coating complying with ASTM B 633 or ASTM F 1941, Class Fe/Zn 5, at exterior walls. Select fasteners for type, grade, and class required.

B. Cast-in-Place Anchors in Concrete: Either threaded type or wedge type unless otherwise indicated; galvanized ferrous castings, either ASTM A 47/A 47M malleable iron or ASTM A 27/A 27M cast steel. Provide bolts, washers, and shims as needed, all hot-dip galvanized per ASTM F 2329.

C. Post-Installed Anchors: **Torque-controlled expansion anchor**.
   1. Material for Interior Locations: Carbon-steel components zinc plated to comply with ASTM B 633 or ASTM F 1941, Class Fe/Zn 5, unless otherwise indicated.

2.4 MISCELLANEOUS MATERIALS

A. Shop Primers: Provide primers that comply with **Section 099113 "Exterior Painting" and Section 099123 Interior Painting."**

B. Galvanizing Repair Paint: High-zinc-dust-content paint complying with SSPC-Paint 20 and compatible with paints specified to be used over it.

C. Nonshrink, Nonmetallic Grout: Factory-packaged, nonstaining, noncorrosive, nongaseous grout complying with ASTM C 1107/C 1107M. Provide grout specifically recommended by manufacturer for interior and exterior applications.

D. Concrete: Comply with requirements in Section 033000 "Cast-in-Place Concrete" for normal-weight, air-entrained, concrete with a minimum 28-day compressive strength of 3000 psi.

2.5 FABRICATION, GENERAL

A. Shop Assembly: Preassemble items in the shop to greatest extent possible. Use connections that maintain structural value of joined pieces.

B. Cut, drill, and punch metals cleanly and accurately. Remove burrs and ease edges. Remove sharp or rough areas on exposed surfaces.

C. Weld corners and seams continuously to comply with the following:
   1. Use materials and methods that minimize distortion and develop strength and corrosion resistance of base metals.
   2. Obtain fusion without undercut or overlap.
   3. Remove welding flux immediately.
   4. At exposed connections, finish exposed welds and surfaces smooth and blended.

D. Form exposed connections with hairline joints, flush and smooth, using concealed fasteners or welds where possible. Locate joints where least conspicuous.

E. Fabricate seams and other connections that are exposed to weather in a manner to exclude water. Provide weep holes where water may accumulate.

F. Where units are indicated to be cast into concrete or built into masonry, equip with integrally welded steel strap anchors not less than 8 inches from ends and corners of units and 24 inches o.c.

2.6 MISCELLANEOUS FRAMING AND SUPPORTS

A. General: Provide steel framing and supports not specified in other Sections as needed to complete the Work.

B. Fabricate units from steel shapes, plates, and bars of welded construction unless otherwise indicated. Fabricate to sizes, shapes, and profiles indicated and as necessary to receive adjacent construction.

2.7 SHELF ANGLES

A. Fabricate shelf angles from steel angles of sizes indicated and for attachment to concrete framing. Provide horizontally slotted holes to receive 3/4-inch bolts, spaced not more than 6 inches from ends and 24 inches o.c., unless otherwise indicated.

B. For cavity walls, provide vertical channel brackets to support angles from backup masonry and concrete.

C. Galvanize shelf angles located in exterior walls.

D. Prime shelf angles located in exterior walls with **zinc-rich primer.**

E. Furnish wedge-type concrete inserts, complete with fasteners, to attach shelf angles to cast-in-place concrete.

2.8 METAL LADDERS

A. General:
   1. Comply with ANSI A14.3.

B. Steel Ladders:
   1. Space siderails **18 inches** apart unless otherwise indicated.
   2. Siderails: Continuous, **1/2-by-2-1/2-inch** steel flat bars, with eased edges.
   3. Rungs: **3/4-inch-diameter** steel bars.
   4. Fit rungs in centerline of siderails; plug-weld and grind smooth on outer rail faces.
   5. Provide nonslip surfaces on top of each rung.
   6. Galvanize **exterior** ladders, including brackets.
   7. Prime interior ladders, including brackets and fasteners, with Section 09 91 23 Interior Painting.

2.9 MISCELLANEOUS STEEL TRIM

A. Unless otherwise indicated, fabricate units from steel shapes, plates, and bars of profiles shown with continuously welded joints and smooth exposed edges. Miter corners and use concealed field splices where possible.

B. Provide cutouts, fittings, and anchorages as needed to coordinate assembly and installation with other work.

C. Galvanize **exterior** miscellaneous steel trim.

2.10 METAL BOLLARDS

A. Fabricate metal bollards from **Schedule 40 steel pipe**.

B. Fabricate sleeves for bollard anchorage from steel **pipe or tubing** with 1/4-inch-thick steel plate welded to bottom of sleeve.

C. Prime bollards with **primer specified in Section 09 91 13 “Exterior Painting”.**

2.11 LOOSE BEARING AND LEVELING PLATES

A. Provide loose bearing and leveling plates for steel items bearing on masonry or concrete construction. Drill plates to receive anchor bolts and for grouting.

2.12 STEEL WELD PLATES AND ANGLES

A. Provide steel weld plates and angles not specified in other Sections, for items supported from concrete construction as needed to complete the Work. Provide each unit with no fewer than two integrally welded steel strap anchors for embedding in concrete.

2.13 FINISHES, GENERAL

A. Finish metal fabrications after assembly.

B. Finish exposed surfaces to remove tool and die marks and stretch lines, and to blend into surrounding surface.

2.14 STEEL AND IRON FINISHES

A. Galvanizing: Hot-dip galvanize items as indicated to comply with ASTM A 153/A 153M for steel and iron hardware and with ASTM A 123/A 123M for other steel and iron products.
   1. Do not quench or apply post galvanizing treatments that might interfere with paint adhesion.

B. Preparation for Shop Priming Galvanized Items: After galvanizing, thoroughly clean railings of grease, dirt, oil, flux, and other foreign matter, and treat with metallic phosphate process.

C. Shop prime iron and steel items not indicated to be galvanized unless they are to be embedded in concrete, or masonry, or unless otherwise indicated.
   1. Shop prime with primers specified in Section 099113 "Exterior Painting" or primers specified in Section 099123 "Interior Painting" as indicated.

D. Preparation for Shop Priming: Prepare surfaces to comply with requirements indicated below:
   1. Exterior Items: SSPC-SP 6/NACE No. 3, "Commercial Blast Cleaning."
   2. Items Indicated to Receive Zinc-Rich Primer: SSPC-SP 6/NACE No. 3, "Commercial Blast Cleaning."
   3. Other Items: SSPC-SP 3, "Power Tool Cleaning."

E. Shop Priming: Apply shop primer to comply with SSPC-PA 1, "Paint Application Specification No. 1: Shop, Field, and Maintenance Painting of Steel," for shop painting.
   1. Stripe paint corners, crevices, bolts, welds, and sharp edges.

PART 3 - EXECUTION

3.1 INSTALLATION, GENERAL

A. Cutting, Fitting, and Placement: Perform cutting, drilling, and fitting required for installing metal fabrications. Set metal fabrications accurately in location, alignment, and elevation; with edges and surfaces level, plumb, true, and free of rack; and measured from established lines and levels.

B. Fit exposed connections accurately together to form hairline joints. Weld connections that are not to be left as exposed joints but cannot be shop welded because of shipping size limitations. Do not weld, cut, or abrade surfaces of exterior units that have been hot-dip galvanized after fabrication and are for bolted or screwed field connections.

C. Field Welding: Comply with the following requirements:
   1. Use materials and methods that minimize distortion and develop strength and corrosion resistance of base metals.
   2. Obtain fusion without undercut or overlap.
   3. Remove welding flux immediately.
   4. At exposed connections, finish exposed welds and surfaces smooth and blended so no roughness shows after finishing and contour of welded surface matches that of adjacent surface.

D. Fastening to In-Place Construction: Provide anchorage devices and fasteners where metal fabrications are required to be fastened to in-place construction.

E. Provide temporary bracing or anchors in formwork for items that are to be built into concrete, masonry, or similar construction.

3.2 INSTALLING METAL BOLLARDS

A. Fill metal-capped bollards solidly with concrete and allow concrete to cure seven days before installing.

B. Anchor bollards in concrete **with pipe sleeves preset and anchored into concrete**. Fill annular space around bollard solidly with nonshrink grout.

C. Fill bollards solidly with concrete, mounding top surface to shed water.

3.3 INSTALLING BEARING AND LEVELING PLATES

A. Clean concrete and masonry bearing surfaces of bond-reducing materials, and roughen to improve bond to surfaces. Clean bottom surface of plates.

B. Set bearing and leveling plates on wedges, shims, or leveling nuts. After bearing members have been positioned and plumbed, tighten anchor bolts. Do not remove wedges or shims but, if protruding, cut off flush with edge of bearing plate before packing with nonshrink grout. Pack grout solidly between bearing surfaces and plates to ensure that no voids remain.

3.4 ADJUSTING AND CLEANING

A. Touchup Painting: Immediately after erection, clean field welds, bolted connections, and abraded areas. Paint uncoated and abraded areas with the same material as used for shop painting to comply with SSPC-PA 1 for touching up shop-painted surfaces.

B. Galvanized Surfaces: Clean field welds, bolted connections, and abraded areas and repair galvanizing to comply with ASTM A 780/A 780M.

END OF SECTION 055000

SECTION 06 10 53 - MISCELLANEOUS ROUGH CARPENTRY

PART 1 - GENERAL

1.1 SUMMARY

A. Section Includes:
1. Wood blocking and nailers.
2. Wood furring.
3. Wood sleepers.
4. Plywood backing panels.

1.2 ACTION SUBMITTALS

A. Product Data: For each type of process and factory-fabricated product.

1.3 INFORMATIONAL SUBMITTALS

A. Evaluation Reports: For the following, from ICC-ES:
1. Preservative-treated wood.
2. Fire-retardant-treated wood.
3. Power-driven fasteners.

PART 2 - PRODUCTS

2.1 WOOD PRODUCTS, GENERAL

A. Lumber: DOC PS 20 and applicable rules of grading agencies indicated. If no grading agency is indicated, provide lumber that complies with the applicable rules of any rules-writing agency certified by the ALSC Board of Review. Provide lumber graded by an agency certified by the ALSC Board of Review to inspect and grade lumber under the rules indicated.
1. Factory mark each piece of lumber with grade stamp of grading agency.
2. Dress lumber, S4S, unless otherwise indicated.

B. Maximum Moisture Content of Lumber: 19 percent unless otherwise indicated.

2.2 WOOD-PRESERVATIVE-TREATED MATERIALS

A. Preservative Treatment by Pressure Process: AWPA U1; Use Category UC2 for interior construction not in contact with ground, and Use Category UC3b for exterior construction not in contact with ground.
1. Preservative Chemicals: Acceptable to authorities having jurisdiction and containing no arsenic or chromium.

B. Kiln-dry lumber after treatment to a maximum moisture content of 19 percent. Do not use material that is warped or does not comply with requirements for untreated material.

C. Mark lumber with treatment quality mark of an inspection agency approved by the ALSC Board of Review.

D. Application: Treat items indicated on Drawings, and the following:
   1. Wood cants, nailers, curbs, equipment support bases, blocking, stripping, and similar members in connection with roofing, flashing, vapor barriers, and waterproofing.
   2. Wood sills, sleepers, blocking, furring, stripping, and similar concealed members in contact with masonry or concrete.

2.3 FIRE-RETARDANT-TREATED MATERIALS

A. Fire-Retardant-Treated Lumber and Plywood by Pressure Process: Products with a flame-spread index of 25 or less when tested according to ASTM E 84, and with no evidence of significant progressive combustion when the test is extended an additional 20 minutes, and with the flame front not extending more than 10.5 feet beyond the centerline of the burners at any time during the test.
   1. Exterior Type: Treated materials shall comply with requirements specified above for fire-retardant-treated lumber and plywood by pressure process after being subjected to accelerated weathering according to ASTM D 2898. Use for exterior locations and where indicated.
   2. Interior Type A: Treated materials shall have a moisture content of 28 percent or less when tested according to ASTM D 3201 at 92 percent relative humidity. Use where exterior type is not indicated.

B. Kiln-dry lumber after treatment to a maximum moisture content of 19 percent.[Kiln-dry plywood after treatment to a maximum moisture content of 15 percent.]

C. Identify fire-retardant-treated wood with appropriate classification marking of qualified testing agency.

D. Application: Treat items indicated on Drawings, and the following:
   1. Concealed blocking.
   2. Plywood backing panels.

2.4 MISCELLANEOUS LUMBER

A. General: Provide miscellaneous lumber indicated and lumber for support or attachment of other construction, including the following:
   1. Blocking.
   2. Nailers.
   3. Furring.

B. Dimension Lumber Items: Construction or No. 2 grade lumber of any species.

C. Concealed Boards: 19 percent maximum moisture content of any of the following species and grades:
   1. Mixed southern pine or southern pine, No. 2 grade; SPIB.
   2. Eastern softwoods, No. 2 Common grade; NELMA.
   3. Northern species, No. 2 Common grade; NLGA.
   4. Western woods, Construction or No. 2 Common grade; WCLIB or WWPA.

2.5 PLYWOOD BACKING PANELS

A. Equipment Backing Panels: Plywood, DOC PS 1, Exterior, A-C, fire-retardant treated, in thickness indicated or, if not indicated, not less than 3/4-inch nominal thickness.

2.6 FASTENERS

A. General: Provide fasteners of size and type indicated that comply with requirements specified in this article for material and manufacture.
   1. Where carpentry is exposed to weather, in ground contact, pressure-preservative treated, or in area of high relative humidity, provide fasteners with hot-dip zinc coating complying with ASTM A 153/A 153M.

B. Screws for Fastening to Metal Framing: ASTM C 1002, length as recommended by screw manufacturer for material being fastened.

C. Power-Driven Fasteners: Fastener systems with an evaluation report acceptable to authorities having jurisdiction, based on ICC-ES AC70.

PART 3 - EXECUTION

3.1 INSTALLATION, GENERAL

A. Set carpentry to required levels and lines, with members plumb, true to line, cut, and fitted. Fit carpentry accurately to other construction. Locate furring, nailers, blocking, grounds, and similar supports to comply with requirements for attaching other construction.

B. Install plywood backing panels by fastening to studs; coordinate locations with utilities requiring backing panels.[Install fire-retardant-treated plywood backing panels with classification marking of testing agency exposed to view.]

C. Comply with AWPA M4 for applying field treatment to cut surfaces of preservative-treated lumber.

D. Securely attach carpentry work to substrate by anchoring and fastening as indicated, complying with the following:
   1. Table 2304.9.1, "Fastening Schedule," in ICC's International Building Code.

2. Table R602.3(1), "Fastener Schedule for Structural Members," and Table R602.3(2), "Alternate Attachments," in ICC's International Residential Code for One- and Two-Family Dwellings.
3. ICC-ES evaluation report for fastener.

3.2 PROTECTION

A. Protect wood that has been treated with inorganic boron (SBX) from weather. If, despite protection, inorganic boron-treated wood becomes wet, apply EPA-registered borate treatment. Apply borate solution by spraying to comply with EPA-registered label.

END OF SECTION 061053

SECTION 06 16 00 - SHEATHING

PART 1 - GENERAL

1.1 SUMMARY

A. Section Includes:
   1. Wall sheathing.
   2. Sheathing joint and penetration treatment.

1.2 ACTION SUBMITTALS

A. Product Data: For each type of process and factory-fabricated product.

PART 2 - PRODUCTS

2.1 WALL SHEATHING

A. Glass-Mat Gypsum Sheathing: ASTM C 1177/1177M.
   1. Basis of Design: Georgia Pacific Dens Glass Sheathing or Architects approved equal.
   2. Type and Thickness: Type X, 5/8 inch thick.

2.2 FASTENERS

A. General: Provide fasteners of size and type indicated that comply with requirements specified in this article for material and manufacture.
   1. For wall sheathing, provide fasteners with hot-dip zinc coating complying with ASTM A 153/A 153M.

2.3 SHEATHING JOINT-AND-PENETRATION TREATMENT MATERIALS

A. Sealant for Glass-Mat Gypsum Sheathing: Elastomeric, medium-modulus, neutral-curing silicone joint sealant compatible with joint substrates formed by gypsum sheathing and other materials, recommended by sheathing manufacturer for application indicated and complying with requirements for elastomeric sealants specified in Section 079200 "Joint Sealants."

B. Sealant for Glass-Mat Gypsum Sheathing: Silicone emulsion sealant complying with ASTM C 834, compatible with sheathing tape and sheathing and recommended by tape and sheathing manufacturers for use with glass-fiber sheathing tape and for covering exposed fasteners.
   1. Sheathing Tape: Self-adhering glass-fiber tape, minimum 2 inches wide, 10 by 10 or 10 by 20 threads/inch, of type recommended by sheathing and tape manufacturers for use with silicone emulsion sealant in sealing joints in glass-mat gypsum sheathing and with a history of successful in-service use.

PART 3 - EXECUTION

3.1 INSTALLATION, GENERAL

A. Do not use materials with defects that impair quality of sheathing or pieces that are too small to use with minimum number of joints or optimum joint arrangement. Arrange joints so that pieces do not span between fewer than three support members.

B. Cut panels at penetrations, edges, and other obstructions of work; fit tightly against abutting construction unless otherwise indicated.

C. Securely attach to substrate by fastening as indicated, complying with the following:
   1. Table 2304.9.1, "Fastening Schedule," in the ICC's International Building Code.
   2. Table R602.3(1), "Fastener Schedule for Structural Members," and Table R602.3(2), "Alternate Attachments," in the ICC's International Residential Code for One- and Two-Family Dwellings.
   3. ICC-ES evaluation report for fastener.

D. Coordinate wall sheathing installation with flashing and joint-sealant installation so these materials are installed in sequence and manner that prevent exterior moisture from passing through completed assembly.

E. Do not bridge building expansion joints; cut and space edges of panels to match spacing of structural support elements.

END OF SECTION 061600

SECTION 06 26 14 – MINERAL PROFILE PANELING

PART 1 - GENERAL

1.1 SUMMARY

A. Section Includes: Light weight composite mineral profile paneling and seam finishing materials to create a monolithic sculptured wall surface.

1.2 AMINISTRATIVE REQUIREMENTS

A. Pre-Installation Meetings:
1. Convene meeting at project site within one week of scheduled start of installation with representatives of the following in attendance: Owner, Architect, General Contractor, Installer, Finisher, and Painter.
2. Review substrate conditions, requirements of related work, installation instructions, seam finishing, and painting instructions, storage and handling procedures, and protection measures.
3. Keep minutes of meeting including responsibilities of various parties and deviations from specifications and installation instructions.

1.3 ACTION SUBMITTALS

A. Product Data: Each product specified.

B. Project List: Minimum 5 previous completed ModularArts, Inc. installations or 5 installations of similar materials and complexity. Include contact name and e-mail address or telephone number for each project.

C. Shop Drawings: Show standard and project specific details including termination at adjacent surfaces.

D. Samples: Minimum 15 by 15 inch panel of specified design(s).

1.4 INFORMATION SUBMITTALS

A. Manufacturer’s installation instructions.

1.5 QUALITY ASSURANCE

A. Qualifications:
1. Manufacturer: Minimum five years experience in producing mineral profile paneling.
2. Installer: Minimum three years experience in finish carpentry/architectural woodwork installation.

3. Finisher: Minimum three years experience in executing Level 5 finish in accordance with GA-214.

B. Field Samples:
1. Provide in a location selected by Architect showing representative sample of installed product including finished seam.
2. Minimum Size: 8 by 8 feet.
3. Approved field samples may remain as part of completed Work.

1.6 DELIVERY, STORAGE, AND HANDLING

A. Storage and Handling Requirements:
1. Store panels in fully enclosed space, protected against damage from moisture, direct sunlight, and surface contamination.
2. Store panels vertically, in shipping crates, until ready to be installed. Loosen crate lids to allow for venting. Do not stack or lean against walls.
3. Store panels in area of installation minimum 24 hours prior to installation.

B. Packaging Waste Management: 100 percent of materials used to package components of this section.

1.7 FIELD CONDITIONS

A. Ambient Conditions:
1. HVAC: Operate HVAC system to maintain occupancy level temperature and relative humidity conditions (35 to 67 percent) in the area of installation from 24 hours prior to delivery of panels to the installation area through remainder of construction period.
2. Lighting: Permanent project lighting, including any special lighting used to highlight the profiled panels, must be operational prior to seam finishing.

1.8 WARRANTY

A. Manufacturer Warranty: Provide manufacturer’s standard limited warranty.

PART 2 - PRODUCTS

2.1 MANUFACTURER
1. Modular Arts, Inc.

2.2 COMPONENTS

A. Profile Panel: Smooth surface mineral composite panel with light weight plant-based foam back.
   1. Size: 32 by 32 by 1.5 inch maximum profile relief.
   2. Physical Properties:

a.	Izod Impact Strength: ASTM D 256	16 in*lbs
b.	Thermal Expansion: ASTM D 696	3.8×10^{-7} in/in ºF.
c.	Compressive Strength: ASMT D 696	2.3 ksi.
d.	Flame Spread Index: ASTM E 84	0
e.	Smoke Development Index: ASTM E 84	50
f.	Weight (for all designs excluding YUMA)	1.5 psf
g.	Weight (for YUMA design only)	3 psf

   3. Design: Orientation as indicated. Note: Modular Arts designs ae protected by registered copyrights and may not be duplicated. Attempts to copy or closely mimic Modular Arts original designs will be considered a violation of intellectual property rights and will be duly pursued.

B. Installation Kit:
   1. Dry Mix Joint Compound: SHEETROCK® brand EASY SAND™ 45, or BEADEX® brand SILVER SET™ 40.
   2. Acrylic Fortifier: THORO® ACRYL 60®.
   3. Construction Adhesive: PL® Polyurethane Premium Construction Adhesive.
   4. Primer Sealer: VALSPAR® LATEX MULTI-PURPOSE PRIMER.
   5. Countersink Drill Bit with Depth Stop-Collar: No. 7.
   6. Flexible Spreader: MUDTOOLS SMT-Y2
   7. Sandpaper sheets No-Load 220G, No-Load 150G.
   8. Plastic Container: One
   9. Measuring Cup: One

2.3 ACCESSORIES

A. Anchors: 30 lb self-drilling, drywall anchor.

B. Screws: Coarse thread, drywall type, length as required by panel design and in accordance with Manufacturer's Installation Instructions.

2.4 SOURCE QUALIITY CONTROL

A. Fabrication Tolerances.

1.	Dimensions, length and width:	±1/16 inch.
2.	Thickness:	±1/16 inch.
3.	Weight:	±1/2 lb.

PART 3 - EXECUTION

3.1 EXAMINATION

A. Examine substrates upon which profile paneling will be installed.
   1. Verify that substrate is a material listed as an acceptable substrate by the profile paneling manufacturer.

B. Verify that permanent project lighting is in place and operational prior to seam finishing.

C. Coordinate with responsible entity to correct unsatisfactory conditions.

D. Commencement of work by installer is acceptance of substrate conditions.

3.2 INSTALLATION

A. Install profile paneling in accordance with Manufacturer's Installation Instructions except that seam finishing shall be performed under Section 09 29 00 – Gypsum Board, and sealing and painting shall be performed under Section 09 91 23 – Interior Painting.

3.3 PROTECTION

A. Protect finished work from damage during remainder of construction period.

END OF SECTION 062614

SECTION 06 41 16 - PLASTIC-LAMINATE-FACED ARCHITECTURAL CABINETS

PART 1 - GENERAL

1.1 SUMMARY

A. Section Includes:
   1. Plastic-laminate-faced architectural cabinets.
   2. Wood furring, blocking, shims, and hanging strips for installing plastic-laminate-faced architectural cabinets unless concealed within other construction before cabinet installation.

B. Related Requirements:
   1. Section 12 36 61.16 “Solid Surfacing Countertops”

1.2 ACTION SUBMITTALS

A. Product Data: For each type of product, including panel products, high-pressure decorative laminate, adhesive for bonding plastic laminate, fire-retardant-treated materials, and cabinet hardware and accessories.

B. Shop Drawings: Show location of each item, dimensioned plans and elevations, large-scale details, attachment devices, and other components.

C. Samples:
   1. Plastic laminates, for each color, pattern, and surface finish.
   2. Thermoset decorative panels, for each color, pattern, and surface finish.

1.3 INFORMATIONAL SUBMITTALS

A. Woodwork Quality Standard Compliance Certificates: AWI Quality Certification Program certificates.

1.4 QUALITY ASSURANCE

A. Fabricator Qualifications: Certified participant in AWI's Quality Certification Program.

B. Installer Qualifications: Fabricator of products, Certified participant in AWI's Quality Certification Program.

1.5 FIELD CONDITIONS

A. Environmental Limitations: Do not deliver or install cabinets until building is enclosed, wet work is complete, and HVAC system is operating and maintaining temperature and relative humidity at occupancy levels during the remainder of the construction period.

PART 2 - PRODUCTS

2.1 PLASTIC-LAMINATE-FACED ARCHITECTURAL CABINETS

A. Quality Standard: Unless otherwise indicated, comply with the "Architectural Woodwork Standards" for grades of architectural plastic-laminate cabinets indicated for construction, finishes, installation, and other requirements.
   1. Provide labels and certificates from AWI certification program indicating that woodwork, including installation, complies with requirements of grades specified.

B. Grade: Premium.

C. Type of Construction: Face frame.

D. Cabinet, Door, and Drawer Front Interface Style: [Flush overlay] [Reveal overlay] [Lipped] [Flush inset].

E. Reveal Dimension: 1/2 inch.

F. High-Pressure Decorative Laminate: NEMA LD 3, grades as indicated or if not indicated, as required by woodwork quality standard.
   1. Manufacturers: Subject to compliance with requirements, provide products by one of the following:
      a. Abet Laminati, Inc.
      b. Formica Corporation.
      c. Lamin-Art, Inc.
      d. Panolam Industries International, Inc.
      e. Wilsonart International; Div. of Premark International, Inc.

G. Laminate Cladding for Exposed Surfaces:
   1. Horizontal Surfaces: Grade HGS.
   2. Postformed Surfaces: Grade HGP.
   3. Vertical Surfaces: Grade VGS.
   4. Pattern Direction: Vertically for drawer fronts, doors, and fixed panels.

H. Materials for Semiexposed Surfaces:
   1. Surfaces Other Than Drawer Bodies: Thermoset decorative panels.
   2. Drawer Sides and Backs: Thermoset decorative panels with PVC or polyester edge banding.
   3. Drawer Bottoms: Thermoset decorative panels.

I. Dust Panels: 1/4-inch plywood or tempered hardboard above compartments and drawers unless located directly under tops.

J. Colors, Patterns, and Finishes: Provide materials and products that result in colors and textures of exposed laminate surfaces complying with the following requirements:
   1. As indicated by laminate manufacturer's designations.

2.2 WOOD MATERIALS

A. Wood Products: Provide materials that comply with requirements of referenced quality standard for each type of woodwork and quality grade specified unless otherwise indicated.
   1. Wood Moisture Content: 5 to 10 percent.

B. Composite Wood Products: Provide materials that comply with requirements of referenced quality standard for each type of woodwork and quality grade specified unless otherwise indicated.
   1. Medium-Density Fiberboard: ANSI A208.2, Grade 130.
   2. Particleboard: ANSI A208.1, Grade M-2.
   3. Thermoset Decorative Panels: Particleboard or medium-density fiberboard finished with thermally fused, melamine-impregnated decorative paper and complying with requirements of NEMA LD 3, Grade VGL, for test methods 3.3, 3.4, 3.6, 3.8, and 3.10.

2.3 FIRE-RETARDANT-TREATED MATERIALS

A. Fire-Retardant-Treated Materials, General: Where fire-retardant-treated materials are required, use materials complying with requirements in this article that are acceptable to authorities having jurisdiction and with fire-test-response characteristics specified as determined by testing identical products per test method indicated by a qualified testing agency.
   1. Identify fire-retardant-treated materials with appropriate classification marking of qualified testing agency in the form of removable paper label or imprint on surfaces that will be concealed from view after installation.

B. Fire-Retardant-Treated Lumber and Plywood: Products with a flame-spread index of 25 or less when tested according to ASTM E 84, with no evidence of significant progressive combustion when the test is extended an additional 20 minutes, and with the flame front not extending more than 10.5 feet beyond the centerline of the burners at any time during the test.
   1. Kiln dry lumber and plywood after treatment to a maximum moisture content of 19 and 15 percent, respectively.

2.4 CABINET HARDWARE AND ACCESSORIES

A. General: Provide cabinet hardware and accessory materials associated with architectural cabinets.

B. Face Frame for Overlay Doors, Soft Close Action, Concealed Hinges (European Type): 110 degrees of opening**,** self-closing.

C. Wire Pulls: Back mounted, solid metal 4 inches long 5/16 inch in diameter.

D. Adjustable Shelf Standards and Supports: BHAM A156.9, B04102; with shelf brackets, B04112.

E. Shelf Rests: BHMA A156.9, B04013; metal.

F. Drawer Slides: BHMA A156.9.
   1. Grade 1HD-100 and Grade 1HD-200: Side mounted; full extension type; zinc-plated-steel ball-bearing slides.

G. Door and Drawer Silencers: BHMA A156.16, L03011.

H. Exposed Hardware Finishes: For exposed hardware, provide finish that complies with BHMA A156.18 for BHMA finish number indicated.
   1. Satin Stainless Steel: BHMA 630.

I. For concealed hardware, provide manufacturer's standard finish that complies with product class requirements in BHMA A156.9

2.5 MISCELLANEOUS MATERIALS

A. Furring, Blocking, Shims, and Hanging Strips: Softwood or hardwood lumber, kiln dried to less than 15 percent moisture content.

B. Anchors: Select material, type, size, and finish required for each substrate for secure anchorage. Provide metal expansion sleeves or expansion bolts for post-installed anchors. Use nonferrous-metal or hot-dip galvanized anchors and inserts at inside face of exterior walls and at floors.

C. Adhesive for Bonding Plastic Laminate: Unpigmented contact cement.
   1. Adhesive for Bonding Edges: Hot-melt adhesive.

2.6 FABRICATION

A. Complete fabrication, including assembly and hardware application, to maximum extent possible before shipment to Project site. Disassemble components only as necessary for shipment and installation. Where necessary for fitting at site, provide ample allowance for scribing, trimming, and fitting.

B. Shop-cut openings to maximum extent possible to receive hardware, appliances, electrical work, and similar items. Locate openings accurately and use templates or roughing-in diagrams to produce accurately sized and shaped openings. Sand edges of cutouts to remove splinters and burrs.

PART 3 - EXECUTION

3.1 PREPARATION

A. Before installation, condition cabinets to average prevailing humidity conditions in installation areas.

3.2 INSTALLATION

A. Grade: Install cabinets to comply with same grade as item to be installed.

B. Install cabinets level, plumb, true, and straight. Shim as required with concealed shims. Install level and plumb to a tolerance of 1/8 inch in 96 inches.

C. Scribe and cut cabinets to fit adjoining work, refinish cut surfaces, and repair damaged finish at cuts.

D. Anchor cabinets to anchors or blocking built in or directly attached to substrates. Secure with countersunk, concealed fasteners and blind nailing. Use fine finishing nails for exposed fastening, countersunk and filled flush with woodwork.

E. Cabinets: Install without distortion so doors and drawers fit openings properly and are accurately aligned. Adjust hardware to center doors and drawers in openings and to provide unencumbered operation. Complete installation of hardware and accessory items as indicated.
   1. Install cabinets with no more than 1/8 inch in 96-inch sag, bow, or other variation from a straight line.
   2. Fasten wall cabinets through back, near top and bottom, and at ends not more than 16 inches o.c. with No. 10 wafer-head screws sized for not less than 1-1/2-inch penetration into wood framing, blocking, or hanging strips or No. 10 wafer-head sheet metal screws through metal backing or metal framing behind wall finish.

END OF SECTION 064116

SECTION 07 21 00 - THERMAL INSULATION

PART 1 - GENERAL

1.1 SUMMARY

A. Section Includes:
   1. Glass-fiber blanket.
   2. Sound control glass-fiber blankets.

1.2 ACTION SUBMITTALS

A. Product Data: For each type of product.

PART 2 - PRODUCTS

2.1 GLASS-FIBER BLANKET INSULATION

A. Manufacturers: Subject to compliance with requirements, available manufacturers offering products that may be incorporated into the Work include, but are not limited to, the following:
   1. CertainTeed Corporation.
   2. Johns Manville.
   3. Owens Corning.

2.2 GLASS-FIBER BLANKETS INSULATION

A. Unfaced Sound Control Glass-Fiber Blankets Insulation: ASTM C 665, Type I; with maximum flame-spread and smoke-developed indexes of 25 and 50, respectively, per ASTM E 84; passing ASTM E 136 for combustion characteristics.

B. Glass-Fiber Blanket, Reinforced-Foil Faced: ASTM C 665, Type III (reflective faced), Class A (faced surface with a flame-spread index of 25 or less); Category 1 (membrane is a vapor barrier), faced with foil scrim, foil-scrim kraft, or foil-scrim polyethylene.

PART 3 - EXECUTION

3.1 INSTALLATION, GENERAL

A. Comply with insulation manufacturer's written instructions applicable to products and applications.

B. Install insulation that is undamaged, dry, and unsoiled and that has not been left exposed to ice, rain, or snow at any time.

C. Extend insulation to envelop entire area to be insulated. Fit tightly around obstructions and fill voids with insulation. Remove projections that interfere with placement.

D. Provide sizes to fit applications and selected from manufacturer's standard thicknesses, widths, and lengths. Apply single layer of insulation units unless multiple layers are otherwise shown or required to make up total thickness or to achieve R-value.

3.2 INSTALLATION OF INSULATION IN FRAMED CONSTRUCTION

A. Blanket Insulation: Install in cavities formed by framing members according to the following requirements:
   1. Use insulation widths and lengths that fill the cavities formed by framing members. If more than one length is required to fill the cavities, provide lengths that will produce a snug fit between ends.
   2. Place insulation in cavities formed by framing members to produce a friction fit between edges of insulation and adjoining framing members.
   3. For metal-framed wall cavities where cavity heights exceed 96 inches, support unfaced blankets mechanically and support faced blankets by taping flanges of insulation to flanges of metal studs.
   4. Vapor-Retarder-Faced Blankets: Tape joints and ruptures in vapor-retarder facings, and seal each continuous area of insulation to ensure airtight installation.
      a. Exterior Walls: Set units with facing placed toward **interior of construction**.

B. Miscellaneous Voids: Install insulation in miscellaneous voids and cavity spaces where required to prevent gaps in insulation using the following materials:
   1. Glass-Fiber Insulation: Compact to approximately 40 percent of normal maximum volume equaling a density of approximately 2.5 lb/cu. ft.

END OF SECTION 072100

SECTION 07 27 26 - FLUID-APPLIED MEMBRANE AIR BARRIERS

PART 1 - GENERAL

1.1 SUMMARY

A. Section Includes:
   1. Vapor-permeable, fluid-applied air barriers.

1.2 PREINSTALLATION MEETINGS

A. Preinstallation Conference: Conduct conference at Project site.

1.3 ACTION SUBMITTALS

A. Product Data: For each type of product.

B. Shop Drawings: For air-barrier assemblies.
   1. Include details for substrate joints and cracks, counterflashing strips, penetrations, inside and outside corners, terminations, and tie-ins with adjoining construction.

1.4 INFORMATIONAL SUBMITTALS

A. Product certificates.

B. Product test reports.

C. Field quality-control reports.

1.5 QUALITY ASSURANCE

A. Installer Qualifications: An entity that employs installers and supervisors who are trained and approved by manufacturer.

B. Mockups: Build mockups to set quality standards for materials and execution.
   1. Build integrated mockups of exterior wall assembly, 150 sq. ft., incorporating backup wall construction, external cladding, and other penetrations, and flashing to demonstrate surface preparation, crack and joint treatment, application of air barriers, and sealing of gaps, terminations, and penetrations of air-barrier assembly.
      a. Coordinate construction of mockups to permit inspection and testing of air barrier before external cladding are installed.
      b. Include junction with building corner condition.

PART 2 - PRODUCTS

2.1 PERFORMANCE REQUIREMENTS

A. Air-Barrier Performance: Air-barrier assembly and seals with adjacent construction shall be capable of performing as a continuous air barrier and as a liquid-water drainage plane flashed to discharge to the exterior incidental condensation or water penetration. Air-barrier assemblies shall be capable of accommodating substrate movement and of sealing substrate expansion and control joints, construction material changes, penetrations, and transitions at perimeter conditions without deterioration and air leakage exceeding specified limits.

B. Air-Barrier Assembly Air Leakage: Maximum 0.04 cfm/sq. ft. of surface area at 1.57 lbf/sq. ft., when tested according to ASTM E 2357.

2.2 MEDIUM-BUILD AIR BARRIERS, VAPOR PERMEABLE

A. Medium-Build, Vapor-Permeable Air Barrier: Synthetic polymer material with an installed dry film thickness, according to manufacturer's written instructions, of 17 to 30 mils over smooth, void-free substrates.
   1. Basis of Design: Dupont Tyvek Fluid Applied WB System for Fluid Applied Membrane Air Barrier or Architect approve equal.
   2. Physical and Performance Properties:
      a. Air Permeance: Maximum 0.004 cfm/sq. ft. of surface area at 1.57-lbf/sq. ft. pressure difference; ASTM E 2178.
      b. Vapor Permeance: Minimum 10 perms; ASTM E 96/E 96M, Desiccant Method, Procedure A.
      c. Ultimate Elongation: Minimum 250 percent; ASTM D 412, Die C.
      d. Adhesion to Substrate: Minimum 16 lbf/sq. in. when tested according to ASTM D 4541.
      e. Fire Propagation Characteristics: Passes NFPA 285 testing as part of an approved assembly.
      f. UV Resistance: Can be exposed to sunlight for 9 months according to manufacturer's written instructions.

2.3 ACCESSORY MATERIALS

A. Requirement: Provide primers, transition strips, termination strips, joint reinforcing fabric and strips, joint sealants, counterflashing strips, flashing sheets and metal termination bars, termination mastic, substrate patching materials, adhesives, tapes, foam sealants, lap sealants, and other accessory materials that are recommended in writing by air-barrier manufacturer to produce a complete air-barrier assembly and that are compatible with primary air-barrier material and adjacent construction to which they may seal.

PART 3 - EXECUTION

3.1 SURFACE PREPARATION

A. Clean, prepare, treat, fill, and seal substrate and joints and cracks in substrate according to manufacturer's written instructions and details. Provide clean, dust-free, and dry substrate for air-barrier application.

B. Mask off adjoining surfaces not covered by air barrier to prevent spillage and overspray affecting other construction.

C. Remove fins, ridges, mortar, and other projections and fill honeycomb, aggregate pockets, holes, and other voids in concrete with substrate-patching material.

D. Remove excess mortar from masonry ties, shelf angles, and other obstructions.

E. At changes in substrate plane, apply sealant or termination mastic beads at sharp corners and edges to form a smooth transition from one plane to another.

F. Bridge isolation joints, expansion joints and discontinuous wall-to-wall, deck-to-wall, and deck-to-deck joints with air-barrier accessory material that accommodates joint movement according to manufacturer's written instructions and details.

3.2 INSTALLATION

A. Install materials according to air-barrier manufacturer's written instructions and details to form a seal with adjacent construction and ensure continuity of air and water barrier.
   1. Coordinate the installation of air barrier with installation of roofing membrane and base flashing to ensure continuity of air barrier with roofing membrane.
   2. Install transition strip on roofing membrane or base flashing so that a minimum of 3 inches of coverage is achieved over each substrate.
   3. Unless manufacturer recommends in writing against priming, apply primer to substrates at required rate and allow it to dry.
   4. Apply primer to substrates at required rate and allow it to dry. Limit priming to areas that will be covered by air-barrier material on same day. Reprime areas exposed for more than 24 hours.

B. Connect and seal exterior wall air-barrier material continuously to roofing-membrane air barrier, concrete below-grade structures, floor-to-floor construction, exterior glazing and window systems, glazed curtain-wall systems, storefront systems, exterior louvers, exterior door framing, and other construction used in exterior wall openings, using accessory materials.

C. Wall Openings: Prime concealed, perimeter frame surfaces of windows, curtain walls, storefronts, and doors. Apply transition strip so that a minimum of 3 inches of coverage is achieved over each substrate. Maintain 3 inches of full contact over firm bearing to perimeter frames, with not less than 1 inch of full contact.

D. Repair punctures, voids, and deficient lapped seams in strips and transition strips. Slit and flatten fishmouths and blisters. Patch with transition strips extending 6 inches beyond repaired areas in strip direction.

E. Medium-Build Air Barriers: Apply continuous unbroken air-barrier material to substrates according to the following thickness. Apply an increased thickness of air-barrier material in full contact around protrusions such as masonry ties.
   1. Vapor-Permeable, Medium-Build Air Barrier: Total dry film thickness as recommended in writing by manufacturer to comply with performance requirements, applied in one or more equal coats. Apply additional material as needed to achieve void- and pinhole-free surface, but do not exceed thickness on which required vapor permeability is based.

3.3 CLEANING AND PROTECTION

A. Protect air-barrier system from damage during application and remainder of construction period, according to manufacturer's written instructions.

B. Remove masking materials after installation.

END OF SECTION 072726

SECTION 07 46 19 - STEEL SIDING AND SOFFITS

PART 1 - GENERAL

1.1 SUMMARY

A. Section includes steel siding and soffit.

1.2 ACTION SUBMITTALS

A. Product Data: For each type of product.

B. Samples: For steel siding and soffit including related accessories.

1.3 INFORMATIONAL SUBMITTALS

A. Product certificates.

B. Research/evaluation reports.

C. Sample warranty.

1.4 CLOSEOUT SUBMITTALS

A. Maintenance data.

1.5 QUALITY ASSURANCE

A. Mockups: Build mockups to verify selections made under Sample submittals and to demonstrate aesthetic effects and to set quality standards for fabrication and installation.
   1. Build mockup of typical wall and soffit areas as shown on Drawings.
   2. Subject to compliance with requirements, approved mockups may become part of the completed Work if undisturbed at time of Substantial Completion.

1.6 WARRANTY

A. Special Warranty: Manufacturer agrees to repair or replace products that fail in materials or workmanship within specified warranty period.
   1. Warranty Period: 25 years from date of Substantial Completion.
   2. Warranty Period for Chalking and Fading: 40 years from date of Substantial Completion.

PART 2 - PRODUCTS

2.1 STEEL SIDING

A. Steel Siding: Formed product, in continuous lengths without end joints, made from galvanized steel complying with ASTM A 653/A 653M, G90 coating.
   1. Basis of Design: MBCI Shadow Rib for Steel Siding and Soffits or Architects approved equal.

B. Applications: Wall and Soffits.

C. Coverage Width: 16 inches.

D. Panel Attachment: Concealed fastening system.

E. Gauge: 22.

F. Finish: Smooth.

G. Coatings: Galvalume Plus and Signature 300 coating.
   1. Colors: As selected by Architect from manufacturer's full range of colors.

2.2 ACCESSORIES

A. Siding and Soffit Accessories, General: Provide starter strips, edge trim, outside and inside corner caps, and other items as recommended by siding manufacturer for building configuration.
   1. Provide accessories made from same material as adjacent siding and soffits unless otherwise indicated.

B. Fasteners:
   1. For fastening to metal, use ribbed bugle-head screws of sufficient length to penetrate a minimum of 1/4 inch, or three screw-threads, into substrate.
   2. For fastening galvanized steel, use hot-dip galvanized-steel fasteners. Where fasteners are exposed to view, use prefinished galvanized-steel fasteners in color to match item being fastened.

PART 3 - EXECUTION

3.1 INSTALLATION

A. General: Comply with manufacturer's written installation instructions applicable to products and applications indicated unless more stringent requirements apply.

B. Install joint sealants as specified in Section 079200 "Joint Sealants" and to produce a weathertight installation.

C. Where steel siding contacts dissimilar metals, protect against galvanic action by painting contact surfaces with primer or by applying sealant or tape or installing nonconductive spacers as recommended by manufacturer for this purpose.

3.2 ADJUSTING AND CLEANING

A. Remove damaged, improperly installed, or otherwise defective materials and replace with new materials complying with specified requirements.

B. Clean finished surfaces according to manufacturer's written instructions and maintain in a clean condition during construction.

END OF SECTION 074619

SECTION 07 54 19 - POLYVINYL-CHLORIDE (PVC) ROOFING

PART 1 - GENERAL

1.1 SUMMARY

A. Section Includes:
1. Adhered polyvinyl-chloride (PVC) roofing system.
2. Roof insulation.
3. Coverboard.
4. Walkways.

1.2 DEFINITIONS

A. Roofing Terminology: Definitions in ASTM D 1079 and glossary in NRCA's "The NRCA Roofing and Waterproofing Manual" apply to work of this Section.

1.3 PREINSTALLATION MEETINGS

A. Preinstallation Roofing Conference: Conduct conference at Project site.

1.4 ACTION SUBMITTALS

A. Product Data: For each type of product.

B. Shop Drawings: For roofing system. Include plans, elevations, sections, details, and attachments to other work.

C. Samples for Verification: For the following products:
1. Sheet roofing, of color required.
2. Walkway pads or rolls, of color required.

1.5 INFORMATIONAL SUBMITTALS

A. Research/Evaluation Reports: For components of roofing system, from ICC-ES.

B. Sample Warranties: For manufacturer's special warranties.

1.6 CLOSEOUT SUBMITTALS

A. Maintenance Data: For roofing system to include in maintenance manuals.

1.7 QUALITY ASSURANCE

A. Installer Qualifications: A qualified firm that is approved, authorized, or licensed by roofing system manufacturer to install manufacturer's product and that is eligible to receive manufacturer's special warranty.

1.8 WARRANTY

A. Special Warranty: Manufacturer agrees to repair or replace components of roofing system that fail in materials or workmanship within specified warranty period.
   1. Warranty Period: 20 years from date of Substantial Completion.

PART 2 - PRODUCTS

2.1 MANUFACTURERS

A. Source Limitations: Obtain components including roof insulation, fasteners, coverboard and walkway pads for roofing system from same manufacturer as membrane roofing or manufacturer approved by membrane roofing manufacturer.

2.2 PERFORMANCE REQUIREMENTS

A. Accelerated Weathering: Roofing system shall withstand 2000 hours of exposure when tested according to ASTM G 152, ASTM G 154, or ASTM G 155.

B. Impact Resistance: Roofing system shall resist impact damage when tested according to ASTM D 3746 or ASTM D 4272.

C. Roofing System Design: Tested by a qualified testing agency to resist the following uplift pressures:
   1. Corner Uplift Pressure: as indicated.
   2. Perimeter Uplift Pressure: as indicated.
   3. Field-of-Roof Uplift Pressure: as indicated.

D. Exterior Fire-Test Exposure: ASTM E 108 or UL 790, Class A; for application and roof slopes indicated; testing by a qualified testing agency. Identify products with appropriate markings of applicable testing agency.

E. Fire-Resistance Ratings: Comply with fire-resistance-rated assembly designs indicated. Identify products with appropriate markings of applicable testing agency.

2.3 PVC ROOFING

A. PVC Sheet: ASTM D 4434/D 4434M, Type II, Grade I, glass-fiber reinforced, felt backed.
   1. Basis of Design: Sika Sarnafil, Inc., at 410 or Architects approved equal.
   2. Thickness: 60 mils, nominal.
   3. Exposed Face Color: White.

2.4 AUXILIARY ROOFING MATERIALS

A. General: Auxiliary materials recommended by roofing system manufacturer for intended use and compatible with roofing.
   1. Liquid-type auxiliary materials shall comply with VOC limits of authorities having jurisdiction.

B. Sheet Flashing: Manufacturer's standard sheet flashing of same material, type, reinforcement, thickness, and color as PVC sheet.

C. Bonding Adhesive: Manufacturer's standard.

D. Slip Sheet: Manufacturer's standard, of thickness required for application.

E. Miscellaneous Accessories: Provide metal termination bars, metal battens, pourable sealers, preformed cone and vent sheet flashings, preformed inside and outside corner sheet flashings, T-joint covers, lap sealants, termination reglets, and other accessories.

2.5 ROOF INSULATION

A. Polyisocyanurate Board Insulation: ASTM C 1289, Type II, Class 1, Grade 2, felt or glass-fiber mat facer on both major surfaces.
   1. Basis of Design: Sika Sarnafil, Inc., or Architect approved equal.

B. Tapered Insulation: Provide factory-tapered insulation boards fabricated to slopes as indicated unless otherwise indicated.

C. Provide preformed saddles, crickets, tapered edge strips, and other insulation shapes where indicated for sloping to drain. Fabricate to slopes indicated.

2.6 INSULATION ACCESSORIES

A. Fasteners: Factory-coated steel fasteners and metal or plastic plates complying with corrosion-resistance provisions in FM Global 4470, designed for fastening roof insulation and cover boards to substrate, and acceptable to roofing system manufacturer.

B. Cover Board: ASTM C 1177/C 1177M, glass-mat, water-resistant gypsum substrate, 1/2 inch thick.
   1. Basis of Design: “Dens Deck Prime” or Architect approved equal.

2.7 WALKWAYS

A. Flexible Walkways: Factory-formed, nonporous, heavy-duty, slip-resisting, surface-textured walkway pads, approximately 3/16 inch thick and acceptable to roofing system manufacturer.

PART 3 - EXECUTION

3.1 ROOFING INSTALLATION, GENERAL

A. Install roofing system according to roofing system manufacturer's written instructions.

B. Complete terminations and base flashings and provide temporary seals to prevent water from entering completed sections of roofing system at end of workday or when rain is forecast. Remove and discard temporary seals before beginning work on adjoining roofing.

3.2 INSULATION INSTALLATION

A. Coordinate installing roofing system components so insulation is not exposed to precipitation or left exposed at the end of the workday.

B. Install tapered insulation under area of roofing to conform to slopes indicated.

C. Install insulation under area of roofing to achieve required thickness. Where overall insulation thickness is 2.7 inches or greater, install two or more layers with joints of each succeeding layer staggered from joints of previous layer a minimum of 6 inches in each direction.

D. Loosely Laid Insulation: Loosely lay insulation units over substrate.

E. Install cover boards over insulation with long joints in continuous straight lines with end joints staggered between rows. Offset joints of insulation below a minimum of 6 inches in each direction. Loosely butt cover boards together and fasten to roof deck.
   1. Fasten cover boards to resist uplift pressure at corners, perimeter, and field of roof.

3.3 ADHERED ROOFING INSTALLATION

A. Adhere roofing over area to receive roofing according to roofing system manufacturer's written instructions. Unroll roofing and allow to relax before retaining.
   1. Install sheet according to ASTM D 5036.

B. Accurately align roofing, and maintain uniform side and end laps of minimum dimensions required by manufacturer. Stagger end laps.

C. Bonding Adhesive: Apply to substrate and underside of roofing at rate required by manufacturer, and allow to partially dry before installing roofing. Do not apply to splice area of roofing.

D. In addition to adhering, mechanically fasten roofing securely at terminations, penetrations, and perimeter of roofing.

E. Seams: Clean seam areas, overlap roofing, and hot-air weld side and end laps of roofing and sheet flashings according to manufacturer's written instructions, to ensure a watertight seam installation.
   1. Test lap edges with probe to verify seam weld continuity. Apply lap sealant to seal cut edges of sheet.
   2. Verify field strength of seams a minimum of twice daily, and repair seam sample areas.
   3. Repair tears, voids, and lapped seams in roofing that do not comply with requirements.

F. Spread sealant bed over deck-drain flange at roof drains, and securely seal roofing in place with clamping ring.

3.4 BASE FLASHING INSTALLATION

A. Install sheet flashings and preformed flashing accessories, and adhere to substrates according to roofing system manufacturer's written instructions.

B. Apply bonding adhesive to substrate and underside of sheet flashing at required rate, and allow to partially dry. Do not apply to seam area of flashing.

C. Flash penetrations and field-formed inside and outside corners with cured or uncured sheet flashing.

D. Clean seam areas, overlap, and firmly roll sheet flashings into the adhesive. Hot-air weld side and end laps to ensure a watertight seam installation.

E. Terminate and seal top of sheet flashings and mechanically anchor to substrate through termination bars.

3.5 WALKWAY INSTALLATION

A. Flexible Walkways: Install walkway products in locations indicated. Heat weld to substrate or adhere walkway products to substrate with compatible adhesive according to roofing system manufacturer's written instructions.

3.6 PROTECTING AND CLEANING

A. Protect roofing system from damage and wear during remainder of construction period. When remaining construction does not affect or endanger roofing, inspect roofing for deterioration and damage, describing its nature and extent in a written report, with copies to Architect and Owner.

B. Correct deficiencies in or remove roofing system that does not comply with requirements, repair substrates, and repair or reinstall roofing system to a condition free of damage and deterioration at time of Substantial Completion and according to warranty requirements.

C. Clean overspray and spillage from adjacent construction using cleaning agents and procedures recommended by manufacturer of affected construction.

END OF SECTION 075419

SECTION 07 62 00 - SHEET METAL FLASHING AND TRIM

PART 1 - GENERAL

1.1 SUMMARY

A. Section Includes:
   1. Formed roof-drainage sheet metal fabrications.
   2. Formed low-slope roof sheet metal fabrications.

1.2 PREINSTALLATION MEETINGS

A. Preinstallation Conference: Conduct conference at Project site.

1.3 ACTION SUBMITTALS

A. Product Data: For each type of product.

B. Shop Drawings: For sheet metal flashing and trim.
   1. Include plans, elevations, sections, and attachment details.
   2. Distinguish between shop- and field-assembled work.
   3. Include identification of finish for each item.
   4. Include pattern of seams and details of termination points, expansion joints and expansion-joint covers, direction of expansion, and connections to adjoining work.

C. Samples: For each exposed product and for each color and texture specified.

1.4 INFORMATIONAL SUBMITTALS

A. Product certificates.

B. Product test reports.

C. Sample warranty.

1.5 CLOSEOUT SUBMITTALS

A. Maintenance data.

1.6 QUALITY ASSURANCE

A. Fabricator Qualifications: Employs skilled workers who custom fabricate sheet metal flashing and trim similar to that required for this Project and whose products have a record of successful in-service performance.
   1. For copings and roof edge flashings that are SPRI ES-1 tested, shop shall be listed as able to fabricate required details as tested and approved.

B. Mockups: Build mockups to verify selections made under Sample submittals to demonstrate aesthetic effects and to set quality standards for fabrication and installation.

1.7 WARRANTY

A. Special Warranty on Finishes: Manufacturer agrees to repair finish or replace sheet metal flashing and trim that shows evidence of deterioration of factory-applied finishes within specified warranty period.
   1. Finish Warranty Period: 20 years from date of Substantial Completion.

PART 2 - PRODUCTS

2.1 PERFORMANCE REQUIREMENTS

A. General: Sheet metal flashing and trim assemblies shall withstand wind loads, structural movement, thermally induced movement, and exposure to weather without failure due to defective manufacture, fabrication, installation, or other defects in construction. Completed sheet metal flashing and trim shall not rattle, leak, or loosen, and shall remain watertight.

B. Sheet Metal Standard for Flashing and Trim: Comply with NRCA's "The NRCA Roofing Manual" and SMACNA's "Architectural Sheet Metal Manual" requirements for dimensions and profiles shown unless more stringent requirements are indicated.

C. SPRI Wind Design Standard: Manufacture and install copings tested according to SPRI ES-1 and capable of resisting the following design pressure:
   1. Design Pressure: As indicated on Drawings.

D. Thermal Movements: Allow for thermal movements from ambient and surface temperature changes.
   1. Temperature Change: 120 deg F, ambient; 180 deg F, material surfaces.

2.2 SHEET METALS

A. General: Protect mechanical and other finishes on exposed surfaces from damage by applying strippable, temporary protective film before shipping.

B. Aluminum Sheet: ASTM B 209, alloy as standard with manufacturer for finish required, with temper as required to suit forming operations and performance required.

1. Exposed Coil-Coated Finish:
   a. Two-Coat Fluoropolymer: AAMA 2605. Fluoropolymer finish containing not less than 70 percent PVDF resin by weight in color coat. Prepare, pretreat, and apply coating to exposed metal surfaces to comply with coating and resin manufacturers' written instructions.
2. Color: As selected by Architect from manufacturer's full range.

2.3 UNDERLAYMENT MATERIALS

A. Felt: ASTM D 226/D 226M, Type II (No. 30), asphalt-saturated organic felt; nonperforated.

B. Synthetic Underlayment: Laminated or reinforced, woven polyethylene or polypropylene, synthetic roofing underlayment; bitumen free; slip resistant; suitable for high temperatures over 220 deg F; and complying with physical requirements of ASTM D 226/D 226M for Type I and Type II felts.

2.4 MISCELLANEOUS MATERIALS

A. General: Provide materials and types of fasteners, solder, protective coatings, sealants, and other miscellaneous items as required for complete sheet metal flashing and trim installation and as recommended by manufacturer of primary sheet metal or manufactured item unless otherwise indicated.

B. Fasteners: Wood screws, annular threaded nails, self-tapping screws, self-locking rivets and bolts, and other suitable fasteners designed to withstand design loads and recommended by manufacturer of primary sheet metal or manufactured item.
   1. General: Blind fasteners or self-drilling screws, gasketed, with hex-washer head.
      a. Exposed Fasteners: Heads matching color of sheet metal using plastic caps or factory-applied coating. Provide metal-backed EPDM or PVC sealing washers under heads of exposed fasteners bearing on weather side of metal.
      b. Blind Fasteners: High-strength aluminum or stainless-steel rivets suitable for metal being fastened.
   2. Fasteners for Aluminum Sheet: Aluminum or Series 300 stainless steel.

C. Sealant Tape: Pressure-sensitive, 100 percent solids, polyisobutylene compound sealant tape with release-paper backing. Provide permanently elastic, nonsag, nontoxic, nonstaining tape 1/2 inch wide and 1/8 inch thick.

D. Elastomeric Sealant: ASTM C 920, elastomeric polyurethane polymer sealant; of type, grade, class, and use classifications required to seal joints in sheet metal flashing and trim and remain watertight.

E. Butyl Sealant: ASTM C 1311, single-component, solvent-release butyl rubber sealant; polyisobutylene plasticized; heavy bodied for hooked-type expansion joints with limited movement.

F. Epoxy Seam Sealer: Two-part, noncorrosive, aluminum seam-cementing compound, recommended by aluminum manufacturer for exterior nonmoving joints, including riveted joints.

2.5 FABRICATION, GENERAL

A. General: Custom fabricate sheet metal flashing and trim to comply with details shown and recommendations in cited sheet metal standard that apply to design, dimensions, geometry, metal thickness, and other characteristics of item required. Fabricate sheet metal flashing and trim in shop to greatest extent possible.
   1. Obtain field measurements for accurate fit before shop fabrication.
   2. Form sheet metal flashing and trim to fit substrates without excessive oil canning, buckling, and tool marks; true to line, levels, and slopes; and with exposed edges folded back to form hems.
   3. Conceal fasteners and expansion provisions where possible. Do not use exposed fasteners on faces exposed to view.

B. Expansion Provisions: Form metal for thermal expansion of exposed flashing and trim.
   1. Form expansion joints of intermeshing hooked flanges, not less than 1 inch deep, filled with butyl sealant concealed within joints.
   2. Use lapped expansion joints only where indicated on Drawings.

C. Sealant Joints: Where movable, nonexpansion-type joints are required, form metal to provide for proper installation of elastomeric sealant according to cited sheet metal standard.

D. Fabricate cleats and attachment devices from same material as accessory being anchored or from compatible, noncorrosive metal.

E. Fabricate cleats and attachment devices of sizes as recommended by cited sheet metal standard for application, but not less than thickness of metal being secured.

F. Seams for Aluminum: Fabricate nonmoving seams with flat-lock seams. Form seams and seal with epoxy seam sealer.

2.6 ROOF-DRAINAGE SHEET METAL FABRICATIONS

A. Downspouts: Fabricate rectangular downspouts to dimensions indicated, complete with mitered elbows. Furnish with metal hangers from same material as downspouts and anchors. Shop fabricate elbows.
   1. Fabricate from the following materials:
      a. Aluminum: 0.024 inch thick.

B. Parapet Scuppers: Fabricate scuppers to dimensions required, with closure flange trim to exterior, 4-inch-wide wall flanges to interior, and base extending 4 inches beyond cant or tapered strip into field of roof. Fabricate from the following materials:
   1. Aluminum: 0.032 inch thick.

C. Conductor Heads: Fabricate conductor heads with flanged back and stiffened top edge and of dimensions and shape required, complete with outlet tubes. Fabricate from the following materials:
   1. Aluminum: 0.032 inch thick.

D. Splash Pans: Fabricate to dimensions and shape required and from the following materials:
   1. Aluminum: 0.040 inch thick.

2.7 LOW-SLOPE ROOF SHEET METAL FABRICATIONS

A. Copings: Fabricate in minimum 96-inch-long, but not exceeding 12-foot-long, sections. Fabricate joint plates of same thickness as copings. Furnish with continuous cleats to support edge of external leg and interior leg. Miter corners, fasten and seal watertight. Shop fabricate interior and exterior corners.
   1. Fabricate from the Following Materials:
      a. Aluminum: 0.050 inch thick.

B. Counterflashing and Flashing Receivers: Fabricate from the following materials:
   1. Aluminum: 0.032 inch thick.

PART 3 - EXECUTION

3.1 UNDERLAYMENT INSTALLATION

A. Felt Underlayment: Install felt underlayment, wrinkle free, using adhesive to minimize use of mechanical fasteners under sheet metal flashing and trim. Apply in shingle fashion to shed water, with lapped joints of not less than 2 inches.

B. Synthetic Underlayment: Install synthetic underlayment, wrinkle free, according to manufacturers' written instructions, and using adhesive where possible to minimize use of mechanical fasteners under sheet metal.

3.2 INSTALLATION, GENERAL

A. General: Anchor sheet metal flashing and trim and other components of the Work securely in place, with provisions for thermal and structural movement. Use fasteners, protective coatings, separators, sealants, and other miscellaneous items as required to complete sheet metal flashing and trim system.
   1. Install sheet metal flashing and trim true to line, levels, and slopes. Provide uniform, neat seams with minimum exposure of welds, and sealant.
   2. Install sheet metal flashing and trim to fit substrates and to result in watertight performance. Verify shapes and dimensions of surfaces to be covered before fabricating sheet metal.
   3. Space cleats not more than 12 inches apart. Attach each cleat with at least two fasteners. Bend tabs over fasteners.

4. Install exposed sheet metal flashing and trim with limited oil canning, and free of buckling and tool marks.
5. Torch cutting of sheet metal flashing and trim is not permitted.

B. Metal Protection: Where dissimilar metals contact each other, or where metal contacts pressure-treated wood or other corrosive substrates, protect against galvanic action or corrosion by painting contact surfaces with bituminous coating or by other permanent separation as recommended by sheet metal manufacturer or cited sheet metal standard.
1. Underlayment: Where installing sheet metal flashing and trim directly on cementitious or wood substrates, install underlayment and cover with slip sheet.

C. Expansion Provisions: Provide for thermal expansion of exposed flashing and trim. Space movement joints at maximum of 10 feet with no joints within 24 inches of corner or intersection.
1. Form expansion joints of intermeshing hooked flanges, not less than 1 inch deep, filled with sealant concealed within joints.
2. Use lapped expansion joints only where indicated on Drawings.

D. Fasteners: Use fastener sizes that penetrate wood blocking not less than 1-1/4 inches for nails and not less than 3/4 inch for wood screws.

E. Conceal fasteners and expansion provisions where possible in exposed work and locate to minimize possibility of leakage. Cover and seal fasteners and anchors as required for a tight installation.

F. Seal joints as required for watertight construction. Prepare joints and apply sealants to comply with requirements in Section 079200 "Joint Sealants."

3.3 ROOF-DRAINAGE SYSTEM INSTALLATION

A. General: Install sheet metal roof-drainage items to produce complete roof-drainage system according to cited sheet metal standard unless otherwise indicated.

B. Downspouts: Join sections with 1-1/2-inch telescoping joints. Provide hangers with fasteners designed to hold downspouts securely to walls. Locate hangers at top and bottom and at approximately 60 inches o.c.

C. Splash Pans: Install where downspouts discharge on low-slope roofs. Set in asphalt roofing cement or elastomeric sealant compatible with the substrate.

D. Parapet Scuppers: Continuously support scupper, set to correct elevation, and seal flanges to interior wall face, over cants or tapered edge strips, and under roofing membrane.

E. Conductor Heads: Anchor securely to wall, with elevation of conductor head rim at minimum of 1 inch below scupper discharge.

3.4 ROOF FLASHING INSTALLATION

A. General: Install sheet metal flashing and trim to comply with performance requirements, and cited sheet metal standard. Provide concealed fasteners where possible, and set units true to line, levels, and slopes. Install work with laps, joints, and seams that are permanently watertight and weather resistant.

B. Copings: Anchor to resist uplift and outward forces according to recommendations in cited sheet metal standard unless otherwise indicated.

3.5 CLEANING AND PROTECTION

A. Clean exposed metal surfaces of substances that interfere with uniform oxidation and weathering.

B. Clean off excess sealants.

C. Remove temporary protective coverings and strippable films as sheet metal flashing and trim are installed unless otherwise indicated in manufacturer's written installation instructions.

END OF SECTION 076200

SECTION 07 72 00 - ROOF ACCESSORIES

PART 1 - GENERAL

1.1 SUMMARY

A. Section Includes:
   1. Roof hatches.

1.2 ACTION SUBMITTALS

A. Product Data: For each type of roof accessory.

B. Shop Drawings: For roof accessories.

C. Samples: For each exposed product and for each color and texture specified.

1.3 INFORMATIONAL SUBMITTALS

A. Sample warranties.

1.4 CLOSEOUT SUBMITTALS

A. Operation and maintenance data.

PART 2 - PRODUCTS

2.1 ROOF HATCH

A. Roof Hatches: Metal roof-hatch units with lids and insulated double-walled curbs, welded or mechanically fastened and sealed corner joints, continuous lid-to-curb counterflashing and weathertight perimeter gasketing, straight sides, and integrally formed deck-mounting flange at perimeter bottom.
   1. Basis of Design: Bilco, Type Roof Hatch or Architects approved equal.

B. Type and Size: Single-leaf lid, 36 by 36 inches.

C. Hatch Material: Aluminum sheet.
   1. Thickness: Manufacturer's standard thickness for hatch size indicated.
   2. Finish: Mill.

D. Construction:
   1. Insulation: Glass-fiber.

2. Curb Liner: Manufacturer's standard, of same material and finish as metal curb.
3. Fabricate curbs to minimum height of 12 inches above roofing surface unless otherwise indicated.
4. Sloping Roofs: Where slope or roof deck exceeds 1:48, fabricate curb with perimeter curb height that is constant tapered to accommodate roof slope so that top surfaces of perimeter curb are level.

E. Hardware: Spring operators, hold-open arm, galvanized-steel spring latch with turn handles, stainless-steel butt- or pintle-type hinge system, and padlock hasps inside and outside.

F. Safety Railing System: Roof-hatch manufacturer's standard system including rails, clamps, fasteners, safety barrier at railing opening, and accessories required for a complete installation; attached to roof hatch and complying with 29 CFR 1910.23 requirements and authorities having jurisdiction.
1. Height: 42 inches above finished roof deck.
2. Posts and Rails: Galvanized-steel pipe, 1-1/4 inches in diameter or galvanized-steel tube, 1-5/8 inches in diameter.
3. Flat Bar: Galvanized steel, 2 inches high by 3/8 inch thick.
4. Maximum Opening Size: System constructed to prevent passage of a sphere 21 inches in diameter.
5. Chain Passway Barrier: Galvanized proof coil chain with quick link on fixed end.
6. Self-Latching Gate: Fabricated of same materials and rail spacing as safety railing system. Provide manufacturer's standard hinges and self-latching mechanism.
7. Post and Rail Tops and Ends: Weather resistant, closed or plugged with prefabricated end fittings.
8. Provide weep holes or another means to drain entrapped water in hollow sections of handrail and railing members.
9. Fabricate joints exposed to weather to be watertight.
10. Fasteners: Manufacturer's standard, finished to match railing system.
11. Finish: Manufacturer's standard.
    a. Color: Safety Yellow.

G. Ladder-Assist Post: Roof-hatch manufacturer's standard device for attachment to roof-access ladder.
1. Operation: Post locks in place on full extension; release mechanism returns post to closed position.
2. Height: 42 inches above finished roof deck.
3. Material: Steel tube.
4. Post: 1-5/8-inch-diameter pipe.
5. Finish: Manufacturer's standard baked enamel or powder coat.
    a. Color: Safety Yellow.

2.2 METAL MATERIALS

A. Zinc-Coated (Galvanized) Steel Sheet: ASTM A 653/A 653M, G90 coating designation.
1. Concealed Finish: Pretreat with manufacturer's standard white or light-colored acrylic or polyester-backer finish consisting of prime coat and wash coat, with a minimum total dry film thickness of 0.5 mil.

B. Aluminum Sheet: ASTM B 209, manufacturer's standard alloy for finish required, with temper to suit forming operations and performance required.
   1. Mill Finish: As manufactured.

C. Steel Tube: ASTM A 500/A 500M, round tube.

2.3 MISCELLANEOUS MATERIALS

A. General: Provide materials and types of fasteners, protective coatings, sealants, and other miscellaneous items required by manufacturer for a complete installation.

B. Glass-Fiber Board Insulation: ASTM C 726, nominal density of 3 lb/cu. ft., thermal resistivity of 4.3 deg F x h x sq. ft./Btu x in. at 75 deg F, thickness as indicated.

C. Gaskets: Manufacturer's standard tubular or fingered design of neoprene, EPDM, PVC, or silicone or a flat design of foam rubber, sponge neoprene, or cork.

PART 3 - EXECUTION

3.1 INSTALLATION

A. General: Verify dimensions of roof openings for roof accessories. Install roof accessories according to manufacturer's written instructions.
   1. Install roof accessories level; plumb; true to line and elevation; and without warping, jogs in alignment, buckling, or tool marks.
   2. Anchor roof accessories securely in place so they are capable of resisting indicated loads.
   3. Use fasteners, separators, sealants, and other miscellaneous items as required to complete installation of roof accessories and fit them to substrates.
   4. Install roof accessories to resist exposure to weather without failing, rattling, leaking, or loosening of fasteners and seals.

B. Metal Protection: Protect metals against galvanic action by separating dissimilar metals from contact with each other or with corrosive substrates by painting contact surfaces with bituminous coating or by other permanent separation as recommended by manufacturer.

3.2 REPAIR AND CLEANING

A. Galvanized Surfaces: Clean field welds, bolted connections, and abraded areas and repair galvanizing according to ASTM A 780/A 780M.

B. Touch up factory-primed surfaces with compatible primer ready for field painting according to Section 099113 "Exterior Painting."

C. Clean exposed surfaces according to manufacturer's written instructions.

D. Replace roof accessories that have been damaged or that cannot be successfully repaired by finish touchup or similar minor repair procedures.

END OF SECTION 077200

SECTION 07 92 00 - JOINT SEALANTS

PART 1 - GENERAL

1.1 SUMMARY

A. Section Includes:
1. Silicone joint sealants.
2. Urethane joint sealants.
3. Mildew-resistant joint sealants.
4. Latex joint sealants.

1.2 PREINSTALLATION MEETINGS

A. Preinstallation Conference: Conduct conference at Project site.

1.3 ACTION SUBMITTALS

A. Product Data: For each joint-sealant product.

B. Samples: For each kind and color of joint sealant required.

C. Joint-Sealant Schedule: Include the following information:
1. Joint-sealant application, joint location, and designation.
2. Joint-sealant manufacturer and product name.
3. Joint-sealant formulation.
4. Joint-sealant color.

1.4 INFORMATIONAL SUBMITTALS

A. Product test reports.

B. Preconstruction laboratory test reports.

C. Preconstruction field-adhesion-test reports.

D. Field-adhesion-test reports.

E. Sample warranties.

1.5 QUALITY ASSURANCE

A. Testing Agency Qualifications: Qualified according to ASTM C 1021 to conduct the testing indicated.

1.6 PRECONSTRUCTION TESTING

A. Preconstruction Laboratory Testing: Submit to joint-sealant manufacturers, for testing indicated below, samples of materials that will contact or affect joint sealants.
   1. Adhesion Testing: Use ASTM C 794 to determine whether priming and other specific joint preparation techniques are required to obtain rapid, optimum adhesion of joint sealants to joint substrates.
   2. Compatibility Testing: Use ASTM C 1087 to determine sealant compatibility when in contact with glazing and gasket materials.
   3. Stain Testing: Use ASTM C 1248 to determine stain potential of sealant when in contact with masonry substrates.

B. Preconstruction Field-Adhesion Testing: Before installing sealants, field test their adhesion to Project joint substrates. Test joint sealants according to Method A, Field-Applied Sealant Joint Hand Pull Tab, in Appendix X1.1 in ASTM C 1193 or Method A, Tail Procedure, in ASTM C 1521.

1.7 WARRANTY

A. Special Installer's Warranty: Installer agrees to repair or replace joint sealants that do not comply with performance and other requirements specified in this Section within specified warranty period.
   1. Warranty Period: Two years from date of Substantial Completion.

B. Special Manufacturer's Warranty: Manufacturer agrees to furnish joint sealants to repair or replace those joint sealants that do not comply with performance and other requirements specified in this Section within specified warranty period.
   1. Warranty Period: 10 years from date of Substantial Completion.

PART 2 - PRODUCTS

2.1 JOINT SEALANTS, GENERAL

A. Colors of Exposed Joint Sealants: As selected by Architect from manufacturer's full range.

2.2 SILICONE JOINT SEALANTS

A. Single-Component, Nonsag, Neutral-Curing Silicone Joint Sealant: ASTM C 920, Type S, Grade NS, Class 100/50, for Use NT.
   1. Products: Subject to compliance with requirements, available products that may be incorporated into the Work include, but are not limited to, the following:
      a. Dow Corning Corporation; 790.
      b. GE Advanced Materials - Silicones; SilPruf LM SCS2700.
      c. May National Associates, Inc.; Bondaflex Sil 290.
      d. Pecora Corporation; 301 NS.
      e. Sika Corporation, Construction Products Division; SikaSil-C990.
      f. Tremco Incorporated; Spectrem 1.

B. Single-Component, Nonsag, Neutral-Curing Silicone Joint Sealant: ASTM C 920, Type S, Grade NS, Class 50, for Use NT.
   1. Products: Subject to compliance with requirements, available products that may be incorporated into the Work include, but are not limited to, the following:
      a. Dow Corning Corporation; 799.
      b. GE Advanced Materials - Silicones; UltraGlaze SSG4000.
      c. May National Associates, Inc.; Bondaflex Sil 200 GPN.
      d. Polymeric Systems, Inc.; PSI-641.
      e. Schnee-Morehead, Inc.; SM5731 Poly-Glaze Plus.
      f. Tremco Incorporated; Proglaze SSG.

C. Single-Component, Nonsag, Traffic-Grade, Neutral-Curing Silicone Joint Sealant: ASTM C 920, Type S, Grade NS, Class 100/50, for Use T.
   1. Products: Subject to compliance with requirements, available products that may be incorporated into the Work include, but are not limited to, the following:
      a. Dow Corning Corporation; 790.
      b. May National Associates, Inc.; Bondaflex Sil 728 NS.
      c. Pecora Corporation; 301 NS.
      d. Tremco Incorporated; Spectrem 800.

D. Single-Component, Pourable, Traffic-Grade, Neutral-Curing Silicone Joint Sealant: ASTM C 920, Type S, Grade P, Class 100/50, for Use T.
   1. Products: Subject to compliance with requirements, available products that may be incorporated into the Work include, but are not limited to, the following:
      a. Dow Corning Corporation; 890-SL.
      b. May National Associates, Inc.; Bondaflex Sil 728 SG.
      c. Pecora Corporation; 300 SL.
      d. Tremco Incorporated; Spectrem 900 SL.

E. Multicomponent, Nonsag, Neutral-Curing Silicone Joint Sealant: ASTM C 920, Type M, Grade NS, Class 50, for Use NT.
   1. Products: Subject to compliance with requirements, available products that may be incorporated into the Work include, but are not limited to, the following:
      a. Tremco Incorporated; Spectrem 4TS.

F. Multicomponent, Pourable, Traffic-Grade, Neutral-Curing Silicone Joint Sealant: ASTM C 920, Type M, Grade P, Class 100/50, for Use T.
   1. Products: Subject to compliance with requirements, available products that may be incorporated into the Work include, but are not limited to, the following:
      a. Dow Corning Corporation; FC Parking Structure Sealant.
      b. May National Associates, Inc.; Bondaflex Sil 728 RCS.

2.3 MILDEW-RESISTANT JOINT SEALANTS

A. Mildew-Resistant, Single-Component, Acid-Curing Silicone Joint Sealant: ASTM C 920, Type S, Grade NS, Class 25, for Use NT.
   1. Products: Subject to compliance with requirements, available products that may be incorporated into the Work include, but are not limited to, the following:
      a. BASF Building Systems; Omniplus.
      b. Dow Corning Corporation; 786 Mildew Resistant.
      c. GE Advanced Materials - Silicones; Sanitary SCS1700.
      d. May National Associates, Inc.; Bondaflex Sil 100 WF.
      e. Tremco Incorporated; Tremsil 200 Sanitary.

2.4 URETHANE JOINT SEALANTS

A. Single-Component, Nonsag, Urethane Joint Sealant: ASTM C 920, Type S, Grade NS, Class 100/50, for Use NT.
   1. Products: Subject to compliance with requirements, available products that may be incorporated into the Work include, but are not limited to, the following:
      a. Sika Corporation, Construction Products Division; Sikaflex - 15LM.
      b. Tremco Incorporated; Vulkem 921, Dymonic FC.

B. Single-Component, Nonsag, Urethane Joint Sealant: ASTM C 920, Type S, Grade NS, Class 50, for Use NT.
   1. Products: Subject to compliance with requirements, available products that may be incorporated into the Work include, but are not limited to, the following:
      a. BASF Building Systems; Sonolastic NP1.
      b. Bostik, Inc.; Chem-Calk 900.
      c. May National Associates, Inc.; Bondaflex PUR 25.
      d. Pacific Polymers International, Inc.; Elasto-Thane 230 Type II.
      e. Pecora Corporation; Dynatrol I-XL.
      f. Polymeric Systems, Inc.; Flexiprene 1000.
      g. Schnee-Morehead, Inc.; Permathane SM7100 Permathane SM7110.
      h. Sika Corporation, Construction Products Division; Sikaflex - 1a.
      i. Tremco Incorporated; Dymonic.

C. Single-Component, Nonsag, Traffic-Grade, Urethane Joint Sealant: ASTM C 920. Type S, Grade NS, Class 25, for Use T.
   1. Products: Subject to compliance with requirements, available products that may be incorporated into the Work include, but are not limited to, the following:
      a. BASF Building Systems; Sonolastic NP1.
      b. May National Associates, Inc.; Bondaflex PUR 40 FC.
      c. Pacific Polymers International, Inc.; Elasto-Thane 230 Type II.
      d. Sika Corporation, Construction Products Division; Sikaflex - 1a.
      e. Tremco Incorporated; Vulkem 116.

D. Single-Component, Pourable, Traffic-Grade, Urethane Joint Sealant: ASTM C 920, Type S, Grade P, Class 25, for Use T.
   1. Products: Subject to compliance with requirements, available products that may be incorporated into the Work include, but are not limited to, the following:
      a. BASF Building Systems; Sonolastic SL 1.
      b. Bostik, Inc.; Chem-Calk 950.
      c. May National Associates, Inc.; Bondaflex PUR 35 SL.
      d. Pecora Corporation; Urexpan NR-201.
      e. Polymeric Systems, Inc.; Flexiprene 952.
      f. Schnee-Morehead, Inc.; Permathane SM7101.
      g. Sika Corporation. Construction Products Division; Sikaflex - 1CSL.
      h. Tremco Incorporated; Vulkem 45.

E. Multicomponent, Nonsag, Urethane Joint Sealant: ASTM C 920, Type M, Grade NS, Class 50, for Use NT.
   1. Products: Subject to compliance with requirements, available products that may be incorporated into the Work include, but are not limited to, the following:
      a. Pecora Corporation; Dynatrol II.
      b. Polymeric Systems, Inc.; PSI-270.
      c. Tremco Incorporated; Dymeric 240.

F. Multicomponent, Nonsag, Urethane Joint Sealant: ASTM C 920, Type M, Grade NS, Class 25, for Use NT.
   1. Products: Subject to compliance with requirements, available products that may be incorporated into the Work include, but are not limited to, the following:
      a. BASF Building Systems; Sonolastic NP 2.
      b. Bostik, Inc.; Chem-Calk 500.
      c. May National Associates, Inc.; Bondaflex PUR 2 NS.
      d. Pacific Polymers International, Inc.; Elasto-Thane 227 High Shore Type II Elasto-Thane 227 R Type II.
      e. Pecora Corporation; Dynatred.
      f. Sika Corporation, Construction Products Division; Sikaflex - 2c NS.
      g. Tremco Incorporated; Vulkem 227.

G. Multicomponent, Nonsag, Traffic-Grade, Urethane Joint Sealant: ASTM C 920, Type M, Grade NS, Class 50, for Use T.
   1. Products: Subject to compliance with requirements, available products that may be incorporated into the Work include, but are not limited to, the following:
      a. BASF Building Systems; Sonolastic NP 2.
      b. LymTal International, Inc.; Iso-Flex 885 SG.
      c. May National Associates, Inc.; Bondaflex PUR 2 NS.
      d. Pacific Polymers International, Inc.; Elasto-Thane 227 High Shore Type II Elasto-Thane 227 Type II.
      e. Pecora Corporation; Dynatred.
      f. Sika Corporation, Construction Products Division; Sikaflex - 2c NS.
      g. Tremco Incorporated; Vulkem 227.

2.5 LATEX JOINT SEALANTS

A. Latex Joint Sealant: Acrylic latex or siliconized acrylic latex, ASTM C 834, Type OP, Grade NF.
   1. Products: Subject to compliance with requirements, available products that may be incorporated into the Work include, but are not limited to, the following:
      a. BASF Building Systems; Sonolac.
      b. Bostik, Inc.; Chem-Calk 600.
      c. May National Associates, Inc.; Bondaflex 600.
      d. Pecora Corporation; AC-20+.
      e. Schnee-Morehead, Inc.; SM 8200.
      f. Tremco Incorporated; Tremflex 834.

2.6 JOINT-SEALANT BACKING

A. Cylindrical Sealant Backings: ASTM C 1330, Type C (closed-cell material with a surface skin), and of size and density to control sealant depth and otherwise contribute to producing optimum sealant performance.

B. Bond-Breaker Tape: Polyethylene tape or other plastic tape recommended by sealant manufacturer.

2.7 MISCELLANEOUS MATERIALS

A. Primer: Material recommended by joint-sealant manufacturer where required for adhesion of sealant to joint substrates indicated, as determined from preconstruction joint-sealant-substrate tests and field tests.

B. Cleaners for Nonporous Surfaces: Chemical cleaners acceptable to manufacturers of sealants and sealant backing materials.

C. Masking Tape: Nonstaining, nonabsorbent material compatible with joint sealants and surfaces adjacent to joints.

PART 3 - EXECUTION

3.1 PREPARATION

A. Surface Cleaning of Joints: Clean out joints immediately before installing joint sealants to comply with joint-sealant manufacturer's written instructions and the following requirements:
   1. Remove laitance and form-release agents from concrete.
   2. Clean nonporous joint substrate surfaces with chemical cleaners or other means that do not stain, harm substrates, or leave residues capable of interfering with adhesion.

B. Joint Priming: Prime joint substrates where recommended by joint-sealant manufacturer or as indicated by preconstruction joint-sealant-substrate tests or prior experience.

C. Masking Tape: Use masking tape where required to prevent contact of sealant or primer with adjoining surfaces.

3.2 INSTALLATION OF JOINT SEALANTS

A. General: Comply with ASTM C 1193 and joint-sealant manufacturer's written installation instructions for products and applications indicated, unless more stringent requirements apply.

B. Install sealant backings of kind indicated to support sealants during application and at position required to produce cross-sectional shapes and depths of installed sealants relative to joint widths that allow optimum sealant movement capability.

C. Install bond-breaker tape behind sealants where sealant backings are not used between sealants and backs of joints.

D. Install sealants using proven techniques that comply with the following and at the same time backings are installed:
   1. Place sealants so they directly contact and fully wet joint substrates.
   2. Completely fill recesses in each joint configuration.
   3. Produce uniform, cross-sectional shapes and depths relative to joint widths that allow optimum sealant movement capability.

E. Tooling of Nonsag Sealants: Immediately after sealant application and before skinning or curing begins, tool sealants to form smooth, uniform beads of configuration indicated. Use tooling agents that are approved in writing by sealant manufacturer and that do not discolor sealants or adjacent surfaces.
   1. Provide concave joint profile per Figure 8A in ASTM C 1193 unless otherwise indicated.

3.3 FIELD QUALITY CONTROL

A. Field-Adhesion Testing: Field test joint-sealant adhesion to joint substrates as follows:
   1. Extent of Testing: Test completed and cured sealant joints as follows:
      a. Perform 10 tests for the first 1000 feet of joint length for each kind of sealant and joint substrate.
   2. Test Method: Test joint sealants according to Method A, Field-Applied Sealant Joint Hand Pull Tab, in Appendix X1 in ASTM C 1193 or Method A, Tail Procedure, in ASTM C 1521.

B. Evaluation of Field-Adhesion-Test Results: Sealants not evidencing adhesive failure from testing or noncompliance with other indicated requirements will be considered satisfactory. Remove sealants that fail to adhere to joint substrates during testing or to comply with other requirements. Retest failed applications until test results prove sealants comply with indicated requirements.

END OF SECTION 079200

SECTION 08 11 13 - HOLLOW METAL DOORS AND FRAMES

PART 1 - GENERAL

1.1 SUMMARY

A. Section includes hollow-metal work.

1.2 DEFINITIONS

A. Minimum Thickness: Minimum thickness of base metal without coatings according to NAAMM-HMMA 803 or SDI A250.8.

1.3 ACTION SUBMITTALS

A. Product Data: For each type of product.

B. Shop Drawings: Include elevations, door edge details, frame profiles, metal thicknesses, preparations for hardware, and other details.

C. Samples for Verification: For each type of exposed finish required.

D. Schedule: Prepared by or under the supervision of supplier, using same reference numbers for details and openings as those on Drawings.

PART 2 - PRODUCTS

2.1 MANUFACTURERS

A. Manufacturers: Subject to compliance with requirements, available manufacturers offering products that may be incorporated into the Work include, but are not limited to, the following:
   1. Amweld International, LLC.
   2. Ceco Door Products: an Assa Abloy Group Company.
   3. Republic Doors and Frames.

B. Source Limitations: Obtain hollow-metal work from single source from single manufacturer.

2.2 INTERIOR DOORS AND FRAMES

A. Heavy-Duty Doors and Frames: SDI A250.8, Level 2. At locations indicated in the Door and Frame Schedule.
   1. Physical Performance: Level B according to SDI A250.4.
   2. Doors:
      a. Type: As indicated in the Door and Frame Schedule.
      b. Thickness: 1-3/4 inches.
      c. Face: Uncoated, cold-rolled steel sheet, minimum thickness of 0.042 inch.
      d. Edge Construction: Model 2, Seamless.
      e. Core: Manufacturer's standard.
   3. Frames:
      a. Materials: Uncoated, steel sheet, minimum thickness of 0.053 inch.
      b. Construction: Full profile welded.
   4. Exposed Finish: Prime.

2.3 EXTERIOR HOLLOW-METAL DOORS AND FRAMES

A. Extra-Heavy-Duty Doors and Frames: SDI A250.8, Level 3. At locations indicated in the Door and Frame Schedule.
   1. Physical Performance: Level A according to SDI A250.4.
   2. Doors:
      a. Type: As indicated in the Door and Frame Schedule.
      b. Thickness: 1-3/4 inches.
      c. Face: Metallic-coated steel sheet, minimum thickness of 0.053 inch, with minimum A40 coating.
      d. Edge Construction: Model 2, Seamless.
      e. Core: Manufacturer's standard insulation material.
   3. Thermal-Rated Doors: Provide doors fabricated with thermal-resistance value (R-value) of not less than 2.1 deg F x h x sq. ft./Btu when tested according to ASTM C 1363.
   4. Frames:
      a. Materials: Metallic-coated steel sheet, minimum thickness of 0.053 inch, with minimum A40 coating.
      b. Construction: Full profile welded.
   5. Exposed Finish: Prime.

2.4 FRAME ANCHORS

A. Jamb Anchors:
   1. Stud-Wall Type: Designed to engage stud, welded to back of frames; not less than 0.042 inch thick.
   2. Postinstalled Expansion Type for In-Place Concrete: Minimum 3/8-inch-diameter bolts with expansion shields or inserts. Provide pipe spacer from frame to wall, with throat reinforcement plate, welded to frame at each anchor location.

B. Floor Anchors: Formed from same material as frames, minimum thickness of 0.042 inch, and as follows:
   1. Monolithic Concrete Slabs: Clip-type anchors, with two holes to receive fasteners.

2.5 MATERIALS

A. Cold-Rolled Steel Sheet: ASTM A 1008/A 1008M, Commercial Steel (CS), Type B; suitable for exposed applications.

B. Hot-Rolled Steel Sheet: ASTM A 1011/A 1011M, Commercial Steel (CS), Type B; free of scale, pitting, or surface defects; pickled and oiled.

C. Metallic-Coated Steel Sheet: ASTM A 653/A 653M, Commercial Steel (CS), Type B.

D. Frame Anchors: ASTM A 879/A 879M, Commercial Steel (CS), 04Z coating designation; mill phosphatized.
   1. For anchors built into exterior walls, steel sheet complying with ASTM A 1008/A 1008M or ASTM A 1011/A 1011M, hot-dip galvanized according to ASTM A 153/A 153M, Class B.

E. Inserts, Bolts, and Fasteners: Hot-dip galvanized according to ASTM A 153/A 153M.

F. Power-Actuated Fasteners in Concrete: From corrosion-resistant materials.

G. Mineral-Fiber Insulation: ASTM C 665, Type I (blankets without membrane facing).

2.6 FABRICATION

A. Fabricate hollow-metal work to be rigid and free of defects, warp, or buckle. Accurately form metal to required sizes and profiles, with minimum radius for metal thickness. Where practical, fit and assemble units in manufacturer's plant. To ensure proper assembly at Project site, clearly identify work that cannot be permanently factory assembled before shipment.

B. Hollow-Metal Doors:
   1. Exterior Doors: Provide weep-hole openings in bottoms of exterior doors to permit moisture to escape. Seal joints in top edges of doors against water penetration.

C. Hollow-Metal Frames:
   1. Provide countersunk, flat- or oval-head exposed screws and bolts for exposed fasteners unless otherwise indicated.
   2. Floor Anchors: Weld anchors to bottoms of jambs with at least four spot welds per anchor; however, for slip-on drywall frames, provide anchor clips or countersunk holes at bottoms of jambs.
   3. Jamb Anchors: Provide number and spacing of anchors as follows:
      a. Stud-Wall Type: Locate anchors not more than 18 inches from top and bottom of frame. Space anchors not more than 32 inches o.c. and as follows:
         1) Four anchors per jamb from 60 to 90 inches high.
         2) Five anchors per jamb from 90 to 96 inches high.

3) Five anchors per jamb plus one additional anchor per jamb for each 24 inches or fraction thereof above 96 inches high.
b. Compression Type: Not less than two anchors in each frame.
c. Postinstalled Expansion Type: Locate anchors not more than 6 inches from top and bottom of frame. Space anchors not more than 26 inches o.c.
4. Door Silencers: Except on weather-stripped frames, drill stops to receive door silencers.
a. Single-Door Frames: Drill stop in strike jamb to receive three door silencers.
b. Double-Door Frames: Drill stop in head jamb to receive two door silencers.

D. Hardware Preparation: Factory prepare hollow-metal work to receive templated mortised hardware; include cutouts, reinforcement, mortising, drilling, and tapping according to SDI A250.6, the Door Hardware Schedule, and templates.
1. Reinforce doors and frames to receive nontemplated, mortised, and surface-mounted door hardware.
2. Comply with applicable requirements in SDI A250.6 and BHMA A156.115 for preparation of hollow-metal work for hardware.

2.7 STEEL FINISHES

A. Prime Finish: Clean, pretreat, and apply manufacturer's standard primer.
1. Shop Primer: SDI A250.10.

PART 3 - EXECUTION

3.1 INSTALLATION

A. Hollow-Metal Frames: Install hollow-metal frames for doors of size and profile indicated. Comply with SDI A250.11 or NAAMM-HMMA 840 as required by standards specified.
1. Set frames accurately in position; plumbed, aligned, and braced securely until permanent anchors are set. After wall construction is complete, remove temporary braces, leaving surfaces smooth and undamaged.
a. Install frames with removable stops located on secure side of opening.
b. Install door silencers in frames before grouting.
c. Remove temporary braces necessary for installation only after frames have been properly set and secured.
d. Check plumb, square, and twist of frames as walls are constructed. Shim as necessary to comply with installation tolerances.
2. Floor Anchors: Provide floor anchors for each jamb and mullion that extends to floor, and secure with postinstalled expansion anchors.
a. Floor anchors may be set with power-actuated fasteners instead of postinstalled expansion anchors if so indicated and approved on Shop Drawings.
3. Metal-Stud Partitions: Solidly pack mineral-fiber insulation inside frames.
4. Concrete Walls: Solidly fill space between frames and concrete with mineral-fiber insulation.
5. In-Place Concrete Construction: Secure frames in place with postinstalled expansion anchors. Countersink anchors, and fill and make smooth, flush, and invisible on exposed faces.

6. Installation Tolerances: Adjust hollow-metal door frames for squareness, alignment, twist, and plumb to the following tolerances:
   a. Squareness: Plus or minus 1/16 inch, measured at door rabbet on a line 90 degrees from jamb perpendicular to frame head.
   b. Alignment: Plus or minus 1/16 inch, measured at jambs on a horizontal line parallel to plane of wall.
   c. Twist: Plus or minus 1/16 inch, measured at opposite face corners of jambs on parallel lines, and perpendicular to plane of wall.
   d. Plumbness: Plus or minus 1/16 inch, measured at jambs at floor.

B. Hollow-Metal Doors: Fit hollow-metal doors accurately in frames, within clearances specified below. Shim as necessary.
   1. Non-Fire-Rated Steel Doors:
      a. Between Door and Frame Jambs and Head: 1/8 inch plus or minus 1/32 inch.
      b. Between Edges of Pairs of Doors: 1/8 inch to 1/4 inch plus or minus 1/32 inch.
      c. At Bottom of Door: 5/8 inch plus or minus 1/32 inch.
      d. Between Door Face and Stop: 1/16 inch to 1/8 inch plus or minus 1/32 inch.

3.2 ADJUSTING AND CLEANING

A. Final Adjustments: Check and readjust operating hardware items immediately before final inspection. Leave work in complete and proper operating condition. Remove and replace defective work, including hollow-metal work that is warped, bowed, or otherwise unacceptable.

B. Prime-Coat Touchup: Immediately after erection, sand smooth rusted or damaged areas of prime coat and apply touchup of compatible air-drying, rust-inhibitive primer.

C. Metallic-Coated Surface Touchup: Clean abraded areas and repair with galvanizing repair paint according to manufacturer's written instructions.

D. Touchup Painting: Cleaning and touchup painting of abraded areas of paint are specified in painting Sections.

END OF SECTION 081113

SECTION 08 12 10 – INTERIOR ALUMINUM DOORS, DOOR FRAMES, AND OFFICEFRONT FRAMING

PART 1 - GENERAL

1.1 SUMMARY

A. Section includes:
1. Aluminum door frames for interior use.
2. Aluminum door frames with sidelight frame components for interior use.
3. Aluminum OfficeFront framing system for interior use.

B. Related Sections:
1. Section 08 14 16 “Flushwood Doors” for plastic-laminate-faced doors.
2. Section 08 71 00 “Door Hardware” for door hardware.
3. Section 08 80 00 “Glazing” for glass.

1.2 SUBMITTALS

A. Product Data: Submit for door, sidelight and OfficeFront frames.
1. Include information for factory finish, glazing gaskets, accessories and other required components.
2. Include color charts for finish indicating manufacturer’s standard colors available for selection.

B. Shop Drawing: Submit schedule indicating opening identification number, frame types, dimensions, swing, label, and hardware requirements. Use same reference numbers for openings as Contract Drawings.

C. Include elevations and details indicating frame types, profiles, conditions at openings, methods and locations of anchoring, glazing requirements, hardware locations, and reinforcements for hardware, details of connections to special construction and other custom features.

D. Samples: Submit following:
1. Samples indicating quality of finish in selected colors on alloys used for Work.
2. Where normal color and texture variations are expected, include additional samples to show range of such variation.

E. Informational Submittals: Submit manufacturer’s instructions.

1.3 QUALITY ASSURANCE

A. Single Source Responsibility: Provide aluminum frames and accessories produced by a single manufacturer for each type of product indicated.

B. Manufacturer's Qualifications: Manufacturer shall demonstrate previous experience in manufacturing of interior aluminum door and OfficeFront Framing for a period of not less than 10 years on comparable sized project.

1.4 DELIVERY, STORAGE, AND HANDLING

A. Deliver frames in cartons to provide protection during transit and storage at project site.

B. Inspect frames upon delivery for damage.
   1. Repair minor damage to pre-finished products by means as recommended by manufacturer.
   2. Replace frames that cannot be satisfactorily repaired.
   3. Store frames at project site under cover and as near as possible to final installation location. Do not use covering material that will cause discoloration of aluminum finish.

1.5 ENVIRONMENTAL REQUIREMENTS

A. Do not begin installation of frames until area of work has been completely enclosed and interior is protected from the elements.

B. Maintain temperature and humidity in areas of installation within reasonable limits, as close as possible to final occupancy. If necessary, provide temperature control and ventilation to maintain required environmental conditions.

1.6 WARRANTY

A. Warrant against defects in manufacturing of materials for a period of 2 years from date of substantial completion.

B. Warrant framing finish against defects, including cracking, flaking, blistering, peeling, and excessive fading, chalking and non-uniformity in color for a period of 5 years.

PART 2 - PRODUCTS

2.1 MANUFACTURERS

A. Manufacturers:
   1. Basis of Design: RACO Interior Products, Inc., Classic system for interior aluminum door frames, sidelight frames and OfficeFront Framing System, or Architects approved equal.

B. Products:
   1. Interior Door Frames: Fixed throat frames to accommodate wall thicknesses indicated on Drawings; height of system as indicated on Drawings.

2. Interior Borrowed Light and OfficeFront Framing: Fixed throat frames to accommodate wall thicknesses indicated on Drawings; ceiling height as indicated.

2.2 MATERIALS

A. Aluminum: Meeting requirements of ASTM B221, 6063T5 alloy, and as otherwise required to assure compliance with dimensional tolerances and maintain color uniformity. Billets shall be composed of at least 33% recycled aluminum.

B. Anchorage Devices, Clips and Fasteners: Manufacturer's standard type, compatible with materials being secured.

C. Accessories: As necessary for complete system.

2.3 EXTRUDED ALUMINUM FRAME FABRICATION

A. Assemble all sidelights and windows with the use of clips.

B. Do not exceed maximum size of window or door openings to meet applicable code requirements.

C. Factory pre-machine door frame jambs and prepare for hardware, with concealed reinforcement plates, drilled and tapped as required, and fastened within frame with concealed screws.

2.4 FINISHES

A. Factory finish extruded frame and door components so that all parts exposed to view upon completion of installation are uniform in finish and color. Exposed surfaces shall be free of scratches and other serious blemishes.

B. Clear Anodized: AA-M12C22A21, etched, medium matte, clear anodic coating.

PART 3 - EXECUTION

3.1 EXAMINATION

A. Examine project conditions and verify that project is ready for work of this section to proceed. Do not proceed with installation until unsatisfactory conditions have been corrected.

B. Verify wall thickness does not exceed manufacturer's recommended tolerances of specified throat size.

3.2 INSTALLATION

A. Comply with frame manufacturer's printed installation instructions and approved shop drawings. Do not attempt installation in areas where wall thickness exceeds tolerances of specified throat size.

B. Install frames plumb and square, free from warp or twist, securely anchored to substrates with fasteners recommended by frame manufacturer. Maintain dimensional tolerances and alignment with adjacent work. Ensure joints are hairline tight and surfaces flush with adjacent components.

C. Install glass in accordance with Section 08 80 00.

3.3 ADJUSTING AND CLEANING

A. Protect exposed portions of aluminum surfaces from damage by plaster, lime, acid, cement, and other contaminants..

B. Touch up marred areas so that touch-up is not visible from a distance of 4 feet. Remove and replace frames that cannot be satisfactorily adjusted..

3.4 PROTECTION

A. Protect as required to assure that frames and doors will be without damage until Substantial Completion.

END OF SECTION 081210

SECTION 08 14 16 - FLUSH WOOD DOORS

PART 1 - GENERAL

1.1 SUMMARY

A. Section Includes:
1. Solid-core doors with plastic-laminate faces.
2. Factory fitting flush wood doors to frames and factory machining for hardware.

B. Related Requirements:
1. Section 08 11 13 “Hollow Metal Doors and Frames” for door frames..
2. Section 08 71 00 “Door Hardware” for door hardware.

1.2 ACTION SUBMITTALS

A. Product Data: For each type of door.

B. Shop Drawings: Indicate location, size, and hand of each door; elevation of each kind of door; construction details not covered in Product Data; and the following:
1. Dimensions and locations of blocking.
2. Dimensions and locations of mortises and holes for hardware.
3. Dimensions and locations of cutouts.
4. Undercuts.

C. Samples: For plastic-laminate door faces.

1.3 INFORMATIONAL SUBMITTALS

A. Quality Standard Compliance Certificates: AWI Quality Certification Program certificates.

PART 2 - PRODUCTS

2.1 MANUFACTURERS

A. Basis of Design: Algoma for flush wood doors or Architects approved equal.

2.2 FLUSH WOOD DOORS, GENERAL

A. Quality Standard: In addition to requirements specified, comply with AWI's, AWMAC's, "Architectural Woodwork Standards."
1. Provide AWI Quality Certification Labels indicating that doors comply with requirements of grades specified.

B. WDMA I.S.1-A Performance Grade:
   1. Heavy Duty unless otherwise indicated.

C. Structural-Composite-Lumber-Core Doors:
   1. Structural Composite Lumber: WDMA I.S.10.
      a. Screw Withdrawal, Face: 700 lbf.
      b. Screw Withdrawal, Edge: 400 lbf.

2.3 PLASTIC-LAMINATE-FACED DOORS

A. Interior Solid-Core Doors:
   1. Grade: Premium.
   2. Plastic-Laminate Faces: High-pressure decorative laminates complying with NEMA LD 3, Grade HGS.
   3. Colors, Patterns, and Finishes: As selected by Architect from laminate manufacturer's full range of products.
   4. Exposed Vertical Edges: Plastic laminate that matches faces, applied before faces.
   5. Core: Glued wood stave.
   6. Construction: Five plies. Stiles and rails are bonded to core, then entire unit is abrasive planed before faces and crossbands are applied.

2.4 FABRICATION

A. Factory fit doors to suit frame-opening sizes indicated. Comply with clearance requirements of referenced quality standard for fitting unless otherwise indicated.

B. Factory machine doors for hardware that is not surface applied.

2.5 FACTORY FINISHING

A. General: Comply with referenced quality standard for factory finishing. Complete fabrication, including fitting doors for openings and machining for hardware that is not surface applied, before finishing.
   1. Finish faces, all four edges.

PART 3 - EXECUTION

3.1 INSTALLATION

A. Hardware: For installation, see Section 087100 "Door Hardware."

B. Installation Instructions: Install doors to comply with manufacturer's written instructions and referenced quality standard, and as indicated.

C. Factory-Fitted Doors: Align in frames for uniform clearance at each edge.

END OF SECTION 081416

SECTION 08 41 13 - ALUMINUM-FRAMED ENTRANCES AND STOREFRONTS

PART 1 - GENERAL

1.1 SUMMARY

A. Section Includes:
1. Exterior storefront framing.
2. Storefront framing for punched openings.
3. Exterior manual-swing entrance doors and door-frame units.

1.2 PREINSTALLATION MEETINGS

A. Preinstallation Conference: Conduct conference at Project site.

1.3 ACTION SUBMITTALS

A. Product Data: For each type of product.
1. Include construction details, material descriptions, dimensions of individual components and profiles, and finishes.

B. Shop Drawings: For aluminum-framed entrances, storefronts and punched openings. Include plans, elevations, sections, full-size details, and attachments to other work.
1. Include details of provisions for assembly expansion and contraction and for draining moisture occurring within the assembly to the exterior.
2. Include full-size isometric details of each vertical-to-horizontal intersection of aluminum-framed entrances and storefronts, showing the following:
   a. Joinery, including concealed welds.
   b. Anchorage.
   c. Expansion provisions.
   d. Glazing.
   e. Flashing and drainage.
3. Show connection to and continuity with adjacent thermal, weather, air, and vapor barriers.

C. Samples for Initial Selection: For units with factory-applied color finishes.

D. Samples for Verification: For each type of exposed finish required, in manufacturer's standard sizes.

E. Fabrication Sample: Of each vertical-to-horizontal intersection of assemblies, made from 12-inch lengths of full-size components and showing details of the following:
1. Joinery, including concealed welds.
2. Anchorage.
3. Expansion provisions.

4. Glazing.
5. Flashing and drainage.

F. Delegated-Design Submittal: For aluminum-framed entrances, storefronts and punched openings indicated to comply with performance requirements and design criteria, including analysis data signed and sealed by the qualified professional engineer responsible for their preparation.

1.4 INFORMATIONAL SUBMITTALS

A. Qualification Data: For Installer.

B. Energy Performance Certificates: For aluminum-framed entrances and storefronts, accessories, and components, from manufacturer.
1. Basis for Certification: NFRC-certified energy performance values for each aluminum-framed entrance and storefront.

C. Product Test Reports: For aluminum-framed entrances and storefronts, for tests performed by manufacturer and witnessed by a qualified testing agency or a qualified testing agency.

D. Quality-Control Program: Developed specifically for Project, including fabrication and installation, according to recommendations in ASTM C 1401. Include periodic quality-control reports.

E. Source quality-control reports.

F. Field quality-control reports.

G. Sample Warranties: For special warranties.

1.5 CLOSEOUT SUBMITTALS

A. Maintenance Data: For aluminum-framed entrances and storefronts to include in maintenance manuals.

B. Maintenance Data for Structural Sealant: For structural-sealant-glazed storefront to include in maintenance manuals. Include ASTM C 1401 recommendations for post-installation-phase quality-control program.

1.6 QUALITY ASSURANCE

A. Installer Qualifications: An entity that employs installers and supervisors who are trained and approved by manufacturer.

B. Product Options: Information on Drawings and in Specifications establishes requirements for aesthetic effects and performance characteristics of assemblies. Aesthetic effects are indicated by dimensions, arrangements, alignment, and profiles of components and assemblies as they relate to sightlines, to one another, and to adjoining construction.
   1. Do not change intended aesthetic effects, as judged solely by Architect, except with Architect's approval. If changes are proposed, submit comprehensive explanatory data to Architect for review.

1.7 WARRANTY

A. Special Warranty: Manufacturer agrees to repair or replace components of aluminum-framed entrances and storefronts that do not comply with requirements or that fail in materials or workmanship within specified warranty period.
   1. Warranty Period: Two years from date of Substantial Completion.

B. Special Finish Warranty: Standard form in which manufacturer agrees to repair finishes or replace aluminum that shows evidence of deterioration of factory-applied finishes within specified warranty period.
   1. Deterioration includes, but is not limited to, the following:
      a. Color fading more than 5 Hunter units when tested according to ASTM D 2244.
      b. Chalking in excess of a No. 8 rating when tested according to ASTM D 4214.
      c. Cracking, checking, peeling, or failure of paint to adhere to bare metal.
   2. Warranty Period: Five years from date of Substantial Completion.

PART 2 - PRODUCTS

2.1 PERFORMANCE REQUIREMENTS

A. Delegated Design: Engage a qualified professional engineer, as defined in Section 014000 "Quality Requirements," to design aluminum-framed entrances and storefronts.

B. General Performance: Comply with performance requirements specified, as determined by testing of aluminum-framed entrances and storefronts representing those indicated for this Project without failure due to defective manufacture, fabrication, installation, or other defects in construction.
   1. Aluminum-framed entrances and storefronts shall withstand movements of supporting structure including, but not limited to, story drift, twist, column shortening, long-term creep, and deflection from uniformly distributed and concentrated live loads.
   2. Failure also includes the following:
      a. Thermal stresses transferring to building structure.
      b. Glass breakage.
      c. Noise or vibration created by wind and thermal and structural movements.
      d. Loosening or weakening of fasteners, attachments, and other components.
      e. Failure of operating units.

C. Structural Loads:
   1. Wind Loads: Provide entrance and storefront punched opening systems, including anchorage, capable of withstanding wind-load design pressures calculated according to requirements of authorities having jurisdiction or the American Society of Civil Engineers' ASCE 7, "Minimum Design Loads for Buildings and Other Structures," 6.4.2, "Analytical Procedure," whichever are more stringent.
      a. Deflection of framing members in a direction normal to wall plane is limited to 1/175 of clear span or ¾ inch, whichever is smaller, unless otherwise indicated.
      b. Static-Pressure Test Performance: Provide entrance and storefront punched opening systems that do not evidence material failures, structural distress, failure of operating components to function normally, or permanent deformation of main framing members exceeding 0.2 percent of clear span when testing according to ASTM E330.
         1) Test Pressure: 150 percent of inward and outward wind-load design pressures.
         2) Duration: As required by design wind velocity: Fastest 1 mile of wind for relevant exposure category.
   2. Dead Loads: Provide entrance-and storefront punch opening system members that do not deflect an amount that will reduce glazing bite below 75 percent of design dimension when carrying full dead load.
      a. Provide a minimum 1/8-inch clearance between members and top of glazing or other fixed part immediately below.
      b. Provide a minimum 1/16-inch clearance between members and operable doors.
   3. Live Loads: Provide entrance and storefront punched opening systems, including anchorage, that accommodate the supporting structures' deflection and uniformly distributed and concentrated live loads indicated without failure of materials or permanent deformation.

D. Air Infiltration: Test according to ASTM E 283 for infiltration as follows:
   1. Fixed Framing and Glass Area:
      a. Maximum air leakage of at a static-air-pressure differential of 1.57 lbf/sq. ft.
   2. Entrance Doors:
      a. Pair of Doors: Maximum air leakage of 1.0 cfm/sq. ft. at a static-air-pressure differential of 1.57 lbf/sq. ft..
      b. Single Doors: Maximum air leakage of 0.5 cfm/sq. ft. at a static-air-pressure differential of 1.57 lbf/sq. ft..

E. Water Penetration under Static Pressure: Test according to ASTM E 331 as follows:
   1. No evidence of water penetration through fixed glazing and framing areas when tested according to a minimum static-air-pressure differential of 20 percent of positive wind-load design pressure, but not less than 6.24 lbf/sq. ft.

2.2 MANUFACTURERS

A. Basis-of-Design Product: Subject to compliance with requirements, provide Kawner North American for storefront punched opening and exterior entrance frame units system IR501 and 350 medium style entrances or comparable product by one of the following:
   1. EFCO Corporation.

2. Pittco Architectural Metals, Inc.
3. YKK AP America, Inc.

B. Source Limitations: Obtain all components of aluminum-framed entrance and storefront system, including framing and accessories, from single manufacturer.

2.3 FRAMING

A. Framing Members: Manufacturer's extruded- or formed-aluminum framing members of thickness required and reinforced as required to support imposed loads.
1. Construction: Nonthermal.
2. Glazing System: Retained mechanically with gaskets on four sides.
3. Glazing Plane: Center Glazed.
4. Finish: Clear anodic finish.
5. Fabrication Method: Field-fabricated stick system.

B. Backer Plates: Manufacturer's standard, continuous backer plates for framing members, if not integral, where framing abuts adjacent construction.

C. Brackets and Reinforcements: Manufacturer's standard high-strength aluminum with nonstaining, nonferrous shims for aligning system components.

D. Materials:
1. Aluminum: Alloy and temper recommended by manufacturer for type of use and finish indicated.
   a. Sheet and Plate: ASTM B 209.
   b. Extruded Bars, Rods, Profiles, and Tubes: ASTM B 221.
   c. Extruded Structural Pipe and Tubes: ASTM B 429/B 429M.
   d. Structural Profiles: ASTM B 308/B 308M.
2. Steel Reinforcement: Manufacturer's standard zinc-rich, corrosion-resistant primer complying with SSPC-PS Guide No. 12.00; applied immediately after surface preparation and pretreatment. Select surface preparation methods according to recommendations in SSPC-SP COM, and prepare surfaces according to applicable SSPC standard.

2.4 ENTRANCE DOOR SYSTEMS

A. Entrance Doors: Manufacturer's standard glazed entrance doors for manual-swing operation.
1. Door Construction: 1-3/4-inch overall thickness, with minimum 0.125-inch thick, extruded-aluminum tubular rail and stile members. Mechanically fasten corners with reinforcing brackets that are deeply penetrated and fillet welded or that incorporate concealed tie rods.
2. Door Design: Medium stile; 3-1/2-inch nominal width.
3. Glazing Stops and Gaskets: Square, snap-on, extruded-aluminum stops and preformed gaskets.
   a. Provide nonremovable glazing stops on outside of door.

2.5 ENTRANCE DOOR HARDWARE

A. Entrance Door Hardware: Hardware not specified in this Section is specified in Section 087100 "Door Hardware.

2.6 GLAZING

A. Glazing: Comply with Section 088000 "Glazing."

2.7 ACCESSORIES

A. Fasteners and Accessories: Manufacturer's standard corrosion-resistant, nonstaining, nonbleeding fasteners and accessories compatible with adjacent materials.
   1. Use self-locking devices where fasteners are subject to loosening or turning out from thermal and structural movements, wind loads, or vibration.
   2. Reinforce members as required to receive fastener threads.
   3. Use exposed fasteners with countersunk Phillips screw heads, finished to match framing system, fabricated from 300 series stainless steel.

B. Anchors: Three-way adjustable anchors with minimum adjustment of 1 inch that accommodate fabrication and installation tolerances in material and finish compatible with adjoining materials and recommended by manufacturer.
   1. Concrete and Masonry Inserts: Hot-dip galvanized cast-iron, malleable-iron, or steel inserts complying with ASTM A 123/A 123M or ASTM A 153/A 153M requirements.

C. Concealed Flashing: Manufacturer's standard corrosion-resistant, nonstaining, nonbleeding flashing compatible with adjacent materials.

D. Bituminous Paint: Cold-applied asphalt-mastic paint complying with SSPC-Paint 12 requirements except containing no asbestos, formulated for 30-mil thickness per coat.

2.8 FABRICATION

A. Form or extrude aluminum shapes before finishing.

B. Weld in concealed locations to greatest extent possible to minimize distortion or discoloration of finish. Remove weld spatter and welding oxides from exposed surfaces by descaling or grinding.

C. Fabricate components that, when assembled, have the following characteristics:
   1. Profiles that are sharp, straight, and free of defects or deformations.
   2. Accurately fitted joints with ends coped or mitered.
   3. Physical and thermal isolation of glazing from framing members.
   4. Accommodations for thermal and mechanical movements of glazing and framing to maintain required glazing edge clearances.
   5. Provisions for field replacement of glazing from exterior.

6. Fasteners, anchors, and connection devices that are concealed from view to greatest extent possible.

D. Mechanically Glazed Framing Members: Fabricate for flush glazing without projecting stops.

E. Entrance Door Frames: Reinforce as required to support loads imposed by door operation and for installing entrance door hardware.
   1. At exterior doors, provide compression weather stripping at fixed stops.

F. Entrance Doors: Reinforce doors as required for installing entrance door hardware.
   1. At pairs of exterior doors, provide sliding-type weather stripping retained in adjustable strip and mortised into door edge.
   2. At exterior doors, provide weather sweeps applied to door bottoms.

G. Entrance Door Hardware Installation: Factory install entrance door hardware to the greatest extent possible. Cut, drill, and tap for factory-installed entrance door hardware before applying finishes.

H. After fabrication, clearly mark components to identify their locations in Project according to Shop Drawings.

2.9 ALUMINUM FINISHES

A. Clear Anodic Finish: AAMA 611, AA-M12C22A41, Class I, 0.018 mm or thicker.

PART 3 - EXECUTION

3.1 EXAMINATION

A. Examine areas, with Installer present, for compliance with requirements for installation tolerances and other conditions affecting performance of the Work.

B. Proceed with installation only after unsatisfactory conditions have been corrected.

3.2 PREPARATION

A. Prepare surfaces that are in contact with structural sealant according to sealant manufacturer's written instructions to ensure compatibility and adhesion. Preparation includes, but is not limited to, cleaning and priming surfaces.

3.3 INSTALLATION

A. General:
   1. Comply with manufacturer's written instructions.
   2. Do not install damaged components.
   3. Fit joints to produce hairline joints free of burrs and distortion.

4. Rigidly secure nonmovement joints.
5. Install anchors with separators and isolators to prevent metal corrosion and electrolytic deterioration and to prevent impeding movement of moving joints.
6. Seal perimeter and other joints watertight unless otherwise indicated.

B. Metal Protection:
1. Where aluminum is in contact with dissimilar metals, protect against galvanic action by painting contact surfaces with materials recommended by manufacturer for this purpose or by installing nonconductive spacers.
2. Where aluminum is in contact with concrete, protect against corrosion by painting contact surfaces with bituminous paint.

C. Set continuous sill members and flashing in full sealant bed as specified in Section 079200 "Joint Sealants" to produce weathertight installation.

D. Install components plumb and true in alignment with established lines and grades.

E. Install operable units level and plumb, securely anchored, and without distortion. Adjust weather-stripping contact and hardware movement to produce proper operation.

F. Install glazing as specified in Section 088000 "Glazing."

G. Install weatherseal sealant according to Section 079200 "Joint Sealants" and according to sealant manufacturer's written instructions to produce weatherproof joints. Install joint filler behind sealant as recommended by sealant manufacturer.

H. Entrance Doors: Install doors to produce smooth operation and tight fit at contact points.
1. Exterior Doors: Install to produce weathertight enclosure and tight fit at weather stripping.
2. Field-Installed Entrance Door Hardware: Install surface-mounted entrance door hardware according to entrance door hardware manufacturers' written instructions using concealed fasteners to greatest extent possible.

3.4 ERECTION TOLERANCES

A. Erection Tolerances: Install aluminum-framed entrances and storefronts to comply with the following maximum tolerances:
1. Plumb: 1/8 inch in 10 feet; 1/4 inch in 40 feet.
2. Level: 1/8 inch in 20 feet; 1/4 inch in 40 feet.
3. Alignment:
   a. Where surfaces abut in line or are separated by reveal or protruding element up to 1/2 inch wide, limit offset from true alignment to 1/16 inch.
   b. Where surfaces are separated by reveal or protruding element from 1/2 to 1 inch wide, limit offset from true alignment to 1/8 inch.
   c. Where surfaces are separated by reveal or protruding element of 1 inch wide or more, limit offset from true alignment to 1/4 inch.
4. Location: Limit variation from plane to 1/8 inch in 12 feet; 1/2 inch over total length.

3.5 FIELD QUALITY CONTROL

A. Field Quality-Control Testing: Perform the following test on representative areas of aluminum-framed entrances and storefronts.
   1. Water-Spray Test: Before installation of interior finishes has begun, areas designated by Architect shall be tested according to AAMA 501.2 and shall not evidence water penetration.
      a. Perform a minimum of two tests in areas as directed by Architect.

B. Aluminum-framed entrances and storefronts will be considered defective if they do not pass tests and inspections.

C. Prepare test and inspection reports.

3.6 MAINTENANCE SERVICE

A. Entrance Door Hardware:
   1. Maintenance Tools and Instructions: Furnish a complete set of specialized tools and maintenance instructions as needed for Owner's continued adjustment, maintenance, and removal and replacement of entrance door hardware.

END OF SECTION 084113

SECTION 08 71 00 - DOOR HARDWARE

PART 1 - GENERAL

1.1 SUMMARY

A. This Section includes the following:
   1. Commercial door hardware for the following:
      a. Swinging doors.
      b. Other doors to the extent indicated.
   2. Cylinders for door specified in other Sections.

B. Related Sections include the following
   1. Section 08013 “Hollow Metal Doors and Frames”
   2. Section 08146 “Flush Wood Doors”
   3. Section 08120 “Interior Aluminum Doors, Door Frames, and Office Front Framing”
   4. Section 08411 “Aluminum – Framed Entrance and Storefronts”

C. Products furnished, but not installed, under this Section include the following. Coordinating, purchasing, delivering, and scheduling remain requirements of this Section.
   1. Cylinders for locks on aluminum and glass entrance doors.
   2. Final replacement cores and keys to be installed by Owner.

1.2 SUBMITTALS

A. Product Data: Include installation details, material descriptions, dimensions of individual components and profiles, and finishes.

B. Samples for Initial Selection: Manufacturer’s color charts consisting of units or sections of units showing the full range of colors, textures, and patterns available for each type of door hardware indicated.

C. Samples: For exposed door hardware of each type indicated below, in specified finish, full size. Tag with full description for coordination with the Door Hardware Schedule. Submit samples before, or concurrent with, submission of the final Door Hardware Schedule.
   1. Door Hardware: As follows:
      a. Hinges.
      b. Locks and Latches.
      c. Bolts.
      d. Exit Devices.
      e. Cylinders and Keys.
      f. Operating Trim.
      g. Closers.
      h. Stops and Holders.
      i. Protective Trim.
      j. Door Gasketing.

2. Samples will be returned to Contractor. Units that are acceptable and remain undamaged through submittal, review, and field comparison process may, after final check of operation, be incorporated into the Work, within limitations of keying requirements.

D. Door Hardware Schedule: Prepared by or under the supervision of supplier, detailing fabrication and assembly of door hardware, as well as installation procedures and diagrams. Coordinate final door hardware schedule with doors, frames, and related work to ensure proper size, thickness, hand function, and finish of door hardware.
   1. Format: Comply with scheduling sequence and vertical format in DHI's "Sequence and Format for the Hardware Schedule"
   2. Organization Organize the Door Hardware Schedule into door hardware sets indicating complete designations of every item required for each door or opening.
   3. Content: Include the following information:
      a. Type, style, function, size, label, hand and finish of each door hardware item.
      b. Manufacturer of each item.
      c. Fastenings and other pertinent information.
      d. Location of each door hardware set, cross-referenced to Drawings, both on floor plans and in door and frame schedule.
      e. Explanation of abbreviations, symbols, and codes contained in schedule.
      f. Mounting locations for door hardware.
      g. Door and frame size and materials.
   4. Submittal Sequence: Submit the final Door Hardware Schedule at earliest possible date, particularly where approval of the Door Hardware Schedule must precede fabrication of other work that is critical in the Project construction schedule. Include Product Data, Samples, Shop Drawings of other work affected by door hardware, and other information essential to the coordinated review of the Door Hardware Schedule.
   5. Submittal Sequence: Submit initial draft of final schedule along with essential Product Data to facilitate the fabrication of other work that is critical in the Project construction schedule. Submit the final Door Hardware Schedule after Samples, Product Data, coordination with Shop Drawings of other work, delivery schedules, and similar information has been completed and accepted.

E. Keying Schedule:: Prepared by or under the supervision of supplier, detailing Owner's final keying instructions for locks. Include schematic keying diagram and index each key set to unique door designations.

F. Qualification Data: For firms and persons specified in "Quality Assurance" Article.
   1. Include lists of completed projects with project names and addresses of architects and owners, and other information specified.

G. Product Test Reports: Based on evaluation of comprehensive tests performed by manufacturer and witnessed by a qualified testing agency, indicating current products comply with requirements.

H. Maintenance Data: For each type of door hardware to include in-maintenance manuals specified in Division 1.

I. Warranties: Special warranties specified in this Section.

1.3 QUALITY ASSURANCE

A. Installer Qualifications: An experienced installer who has completed door hardware similar in material, design, and extent to that indicated for this Project and whose work has resulted in construction with a record of successful in-service performance.

B. Supplier Qualifications: Door hardware supplier with warehousing facilities in Project's vicinity and who is or employs a qualified Architectural Hardware Consultant, available during the course of the Work to consult with Contractor, Architect, and Owner about door hardware and keying.
   1. Scheduling Responsibility:: Preparation of door hardware and keying schedules.

C. Architectural Hardware Consultant Qualifications: A person who is currently certified by the Door and Hardware Institute as an Architectural Hardware Consultant and who is experiences in providing consulting services for door hardware installations that are comparable in material, design, and extent to that indicated for this Project.

D. Source Limitations: Obtain each type and variety of door hardware from a single manufacturer, unless otherwise indicated.

E. Regulatory Requirements: Comply with provisions of the following:
   1. Where indicated to comply with accessibility requirements, comply with Americans with Disabilities Act (ADA), "Accessibility Guidelines for Buildings and Facilities (ADAAG)", ANSI A117.1, as follows:
      a. Handles, Pulls, Latches, Locks, and other Operating Devices: Shape that is easy to grasp with one hand and does not require tight grasping, tight pinching, or twisting of the wrist.
      b. Door Closers: Comply with the following maximum opening-force requirements indicated:
         1) Interior Hinged Doors: 5 lbf applied perpendicular to door.
   2. NFPA 101: Comply with the following for means of egress doors:
      a. Latches, Locks, and Exit Devices: Not more than 15 lbf to release the latch. Locks shall not require the use of a key, tool, or special knowledge for operation.
      b. Door Closers: Not more than 30 lbf to set door in motion and not more than 15 lbf to open door to minimum required width.

F. Keying Conference: Conduct conference at Project site to comply with requirements in Division 1 Section "Project Meetings". Incorporate keying conference decisions to final keying schedule after reviewing door hardware keying system including, but not limited to, the following:
   1. Function of building, flow of traffic, purpose of each area, degree of security required.
   2. Preliminary key system schematic diagram.
   3. Address for delivery of keys.

G. Pre-Installation Conference: Conduct conference at Project site to comply with requirements in Division 1 Section "Project Meetings".

1.4 DELIVERY, STORAGE, AND HANDLING

A. Inventory door hardware on receipt and provide secure lock-up for door hardware delivered to Project Site.

B. Tag each item or package separately with identification related to the final Door Hardware Schedule, and include basic installation instruction with each item or package.

C. Deliver keys to Owner.

1.5 COORDINATION

A. Templates: Obtain and distribute to the parties involved, templates for doors, frames, and other work specified to be factory prepared for installing door hardware. Check Shop Drawings of other work to confirm that adequate provisions are made for locating and installing door hardware to comply with indicated requirements.

1.6 WARRANTY

A. General Warranty: Special warranties specified in this Article shall not deprive Owner of other rights Owner may have under other provisions of the Contract Documents and shall be in addition to, and run concurrent with, other warranties made by Contractor under requirements of the Contract Documents.

B. Special Warranty: Written warranty, executed by manufacturer agreeing to repair or replace components of door hardware that fail in materials or workmanship within specified warranty period. Failures include, but are not limited to, the following:
   1. Structural failures including excessive deflection, cracking, or breakage.
   2. Faulty operation of operators and door hardware.
   3. Deterioration of metals, metal finishes, and other materials beyond normal weathering.

C. Warranty Period: Three years from date of Substantial Completion, unless otherwise indicated.

1.7 MAINTENANCE SERVICE

A. Maintenance Tools and Instructions: Finish a complete set of specialized tools and maintenance instructions as needed for Owner’s continued adjustment, maintenance, and removal and replacement of door hardware.

PART 2 - PRODUCTS

2.1 HINGES AND PIVOTS

A. Quantity: Provide the following, unless otherwise indicated:
   1. Two Hinges: For doors with heights up to 60 inches.
   2. Three Hinges: For doors with heights 61 to 90 inches.

3. Four Hinges: For doors with heights 91 to 120 inches
4. For doors with heights more than 120 inches, provide four (4) hinges, plus one (1) hinge for every 30 inches of door height greater than 120 inches.

B. Size: Provide the following, unless otherwise indicated, with hinge widths sized for door thickness and clearances required:

Maximum Door Sizes (Inches)	**Hinge Hieght (Inches)**	**Metal Thickness (Inches)**	
		Standard Weight	**Heavy Weight**
32 by 84 by 1 3/8	3-1/2	0.123	-
36 by 84 by 1-3/8	4	0.130	-
36 by 84 by 1-3/4	4 -1/2	0.134	0.180
42 by 90 by 1 -3/4	4-1/2	0.134	0.180

C. Template Requirements: Except for hinges and pivots to be installed entirely (both leaves) into wood doors and frames, provide only template-produced units.

D. Hinge Weight: Unless otherwise indicated, provide the following:
1. Entrance Doors: Heavy-weight hinges.
2. Doors with Closers: Antifriction-bearing hinges.
3. Interior Doors: Standard-weight hinges.

E. Hinge Base Metal: Unless otherwise indicated, provide the following:
1. Exterior Hinges: Stainless steel, with stainless-steel pin.
2. Interior Hinges: Stainless steel, with stainless-steel pin.

F. Hinge Options: Comply with the following where indicated in the Door Hardware Schedule.
1. Maximum Security Pin: Fix pin in hinge barrel after it is inserted.
2. Non-removable Pins: Provide set screw in hinge barrel that, when tightened into a groove in hinge pin, prevents removal of pin while door is closed; for the following applications:
   a. Outswinging exterior doors.
   b. Outswinging corridor doors with lock.
3. Corners: Square.

G. Fasteners: Comply with the following:
1. Machine Screws: For metal doors and frames. Install into drilled and tapped holes.
2. Wood Screws: For wood doors.
3. Screws: Philips flat-head screws; machine screws (drilled and tapped holes) for metal doors and wood screws for wood doors. Finish screw heads to match surface of hinges.

2.2 LOCKS AND LATCHES

A. Lock Trim: Comply with the following:
   1. Lever: Wrought, forged, or cast.
   2. Escutcheon (Rose): Wrought, forged, or cast.
   3. Dummy Trim: Match lever lock trim and escutcheons.
   4. Lockset Designs: Provide the lockset design designated below or, if sets are provided by another manufacturer, provide designs that match those designated.

B. Lock Throw: Comply with requirements for length of bolts to comply as follows:
   1. Bored Locks: Minimum ½- inch latchbolt throw.
   2. Mortise Locks: Minimum ¾-inch latchbolt throw.
   3. Deadbolts: Minimum 1-inch bolt throw.

C. Backset: 2-3/4 inches, unless otherwise indicated.

2.3 DOOR BOLTS

A. Bolt Throw: Comply with testing requirements for length of bolts to comply with door requirements, and as follows:
   1. Half-Round Surface Bolts: Minimum 7/8-inch throw.
   2. Interlocking Surface Bolts: Minimum 15/16-inch throw.
   3. Mortise Flush Bolts: Minimum 3/47-inch throw.

2.4 EXIT DEVICES

A. Panic Exit Devices: Listed and labeled by a testing and inspecting agency acceptable to authorities having jurisdiction, for panic protection, based on testing according to UL 305.

B. Dummy Push Bar: Nonfunctioning push bar matching functional push bar.
   1. Operation: Moveable.

C. Outside Trim: Pull with cylinder; material and finish to match locksets, unless otherwise indicated.
   1. Match design for locksets and latchsets, unless otherwise indicated.

D. Through Bolts: For exit devices and trim on metal doors.

2.5 CYLINDERS AND KEYING’

A. Cylinders: Manufacturer’s standard tumbler type, constructed from brass or bronze, stainless steel, or nickel silver, and complying with the following:
   1. Number of Pins: Seven.
   2. Mortise Type: Threaded cylinders with rings and straight-or-clover type cam.
   3. Rim Type: Cylinders with back plate, flat-type vertical or horizontal tailpiece, and raised trim ring.
   4. Bored-Lock Type: Cylinder with tail pieces to suit locks.

a. High-Security Grade: BHMA Grade 1A listed and labeled as complying with pick-and-drill resistant testing requirements of UL 437 (Suffix A).

B. Permanent Cores: Manufacturer's standard; finish face to match lockset; complying with the following:
1. Interchangeable Cores: Core insert, removable by use of a special key, and usable with other manufacturer's cylinders.
2. Removable Cores: Core insert, removable by use of a special key, and for use with only the core manufacturer's cylinder and door hardware.

C. Construction Keying: Comply with the following:
1. Construction Master Keys: Provide cylinders with feature that permits voiding of construction keys without cylinder removal. Provide ten (10) construction master keys.
2. Construction Cores: Provide construction cores that are replaceable by permanent cores. Provide ten (10) construction master keys.
   a. Replace construction cores with permanent cores, as directed by Owner.
   b. Furnish permanent cores to Owner for installation.

D. Keying System: Unless otherwise indicated, provide a factory-registered keying system complying with the following requirements:
1. Master Key System: Cylinder are operated by a change key and master key.
2. Existing System: Master key or grand master key locks to Owner's existing system.
3. Existing System: Re-key Owner's existing master key system into new keying system.
4. Keyed Alike: Key all cylinders to the same change key.
   a. Cylinder shall be master keyed.

E. Keys: Provide nickel-silver keys complying with the following:
1. Stamping: Permanently inscribe each key with a visual key control number and include the following notation:
   a. Notation: "DO NOT DUPLICATE".
2. Quantity: In addition to one extra blank key for each lock, provide the following:
   a. Cylinder Change Keys: Three.
   b. Master Keys: Five.

2.6 OPERATION TRIM

A. Materials: Fabricate from metal doors, unless otherwise indicated.

2.7 CLOSERS

A. Power-Assist Closers: As specified in Division 8 Section "Power Door Operations" for access doors for the disabled or where listed in the Door Hardware Schedule. Provide electrohydraulic, electromechanical, and pneumatic type as indicated.

B. Size of Units: Unless otherwise indicated, comply with manufacturer's written recommendations for size of door closers depending on size of door, exposure to weather, and anticipated frequency of use. Provide factory-sized closers, adjustable to meet field conditions and requirements for opening force.

2.8 PROTECTIVE TRIM UNITS

A. Materials: Fabricate protection plates from the following:
   1. Aluminum: 0.050 inch thick; beveled top and 2 sides.

B. Fasteners: Provide manufacturer's standard exposed fasteners for door trim units consisting of either machine or self-tapping screws.

C. Furnish protection plates sized 1-1/2 inches less than door width on push side and ½ inch less than door width on pull side, by height specified in Door Hardware Schedule.

2.9 STOPS AND HOLDERS

A. Floor Stops: For doors, unless wall or other type stops are scheduled or indicated. Do not mount floor stops where they will impede traffic.
   1. Where floor or wall stops are not appropriate, provide overhead holdes.

B. Silencers for Metal Door Frames: BHMA Grade 1; neoprene or rubber, minimum diameter ½ inch; fabricated for drilled-in application to frame.

2.10 DOOR GASKETING

A. General: Provide continuous weather-strip gasketing on exterior doors and provide light or sound gasketing on interior doors where indicated or scheduled. Provide noncorrosive fasteners for exterior applications and elsewhere as indicated.
   1. Perimeter Gasketing: Apply to head and jamb, forming seal between door and frame.

B. Air Leakage: Not to exceed 0.50 came per foot of crack length for gasketing other than for smoke control, as tested according to ASTM E 283.

C. Replaceable Seal Strips: Provide only those units where resilient or flexible seal strips are easily replaceable and readily available from stocks maintained by manufacturer.

D. Gasketing Materilas: Comply with ASTM D 2000 and AAMA 701/702.

2.11 FABRICATION

A. Manufacturer's Nameplate: Do not provide manufacturer's products that have manufacturer's name or trade name displayed in a visible location (omit removable nameplate).
   1. Manufacturer's identification will be permitted on rim of lock cylinders only.

B. Base Metals: Produce door hardware units of base metal, fabricated by forming method indicated, using manufacture's standard metal alloy, composition, temper, and hardness. Furnish metals of a quality equal to or greater than that of specified door hardware units and BHMA A156.18 for finishes. Do not furnish manufacturer's standard materials or forming methods if different from specified standard.

C. Fasteners: Provide door hardware manufactured by comply with published templates generally prepared for machine, wood, and sheet metal screws. Provide screws according to commercially recognized industry standards for application intended. Provide Phillips flat-head screws with finished heads to match surface of door hardware, unless otherwise indicated.
   1. Concealed Fasteners: For door hardware units that are exposed when door is closed, except for units already specified with concealed fasteners. Do not use through bolts for installation where bolt head or nut on opposite face is exposed unless it is the only means of securely attaching the door hardware. Where through bolts are used on hollow door and frame construction, provide sleeves for each through bolts.

D. Fasteners for Wood Doors: Comply with requirements of DHI WDHS.2, "Recommended Fasteners for Wood Doors".

2.12 FINISHES

A. Standard: Comply with BHMA A156.18

B. Protect mechanical finishes on exposed surfaces from damage by applying a strippable temporary protective covering before shipping.

C. Appearance of Finished Work: Variations in appearance of abutting or adjacent pieces are acceptable if they are within one-half of the range of approved Samples. Noticeable variations in the same piece are not acceptable. Variations in appearance of other components are acceptable if they are within the range of approved Samples and are assembled or installed to minimize contrast.

PART 3 - EXECUTION

3.1 EXAMINATION

A. Examine doors and frames, with Installer present, for compliance with requirements for installation tolerances, labeled fire door assembly construction, wall and floor construction, and conditions affecting performance.

B. Proceed with installation only after unsatisfactory conditions have been corrected.

3.2 PREPARTION'

A. Wood Doors: Comply with DHI A115-W series.

3.3 INSTALLATION

A. Mounting Heights: Mount door hardware units at heights indicated in following applicable publications, unless specifically indicated or required to comply with governing regulations:

1. Wood Doors: Dahl WDHS.3, "Recommended Locations for Architectural Hardware for Wood Flush Doors".

B. Install each door hardware item to comply with manufacturer's written instructions. Where cutting and fitting are required to install door hardware onto or into surfaces that are later to be painted or finished in another way, coordinate removal, storage, and reinstallation of surface protective trim units with finishing work specified in Division 9 Sections. Do not install surface-mounted items until finishes have been completed on substrates involved.
   1. Set units level, plumb, and true to line and location. Adjust and reinforce attachment substrates as necessary for proper installation and operation.
   2. Drill and countersink units that are not factory prepared for anchorage fasteners. Space fasteners and anchors according to industry standards.

3.4 ADJUSTING:

A. Initial Adjustment: Adjust and check each operating item of door hardware and each door to ensure proper operation or function of every unit. Replace units that cannot be adjusted to operate as intended. Adjust door control devices to compensate for final operation of heating and ventilating equipment and to comply with referenced accessibility requirements.
   1. Spring Hinges: Adjust to achieve positive latching when door is allowed to close freely from an open position of 30 degrees.
   2. Door Closers: Adjust sweep period so that, from an open position of 70 degrees, the door will take at least 3 seconds to move to a point 3 inches from the latch, measured to the leading edge of the door.

B. Six-Month Adjustment: Approximately six months after date of Substantial Completion, Installer shall perform the following:
   1. Examine and readjust each item of door hardware as necessary to ensure function of doors and door hardware.
   2. Consult with and instruct Owner's personnel on recommended maintenance procedures.
   3. Replace door hardware items that have deteriorated or failed due to faulty design, materials, or installation of door hardware units.

3.5 CLEANING AND PROTECTION

A. Clean adjacent surfaces soiled by door hardware installation.

B. Clean operating items as necessary to restore proper function and finish.

C. Provide final protection and maintain conditions that ensure door hardware is without damage or deterioration at time of Substantial Completion.

END OF SECTION 087100

SECTION 08 81 00 - GLAZING

PART 1 - GENERAL

1.1 SUMMARY

A. This Section includes glazing for the following products and applications, including those specified in other Sections where glazing requirements are specified by reference to this Section:
   1. Storefront framing.
   2. Exterior glazed entrance doors.
   3. Interior doors.
   4. Interior borrowed lites.

1.2 DEFINITIONS

A. Manufacturer: A firm that produces primary glass or fabricated glass as defined in referenced glazing publications.

B. Interspace: Space between lites of an insulating-glass unit that contains dehydrated air or a specified gas.

C. Deterioration of Coated Glass: Defects developed from normal use that are attributed to the manufacturing process and not to causes other than glass breakage and practices for maintaining and cleaning coated glass contrary to manufacturer's written instructions. Defects include peeling, cracking, and other indications of deterioration in metallic coating.

D. Deterioration of Insulating Glass: Failure of the hermetic seal under normal use that is attributed to the manufacturing process and not to causes other than glass breakage and practices for maintaining and cleaning insulating glass contrary to manufacturer's written instructions. Evidence of failure is the obstruction of vision by dust, moisture, or film on interior surfaces of glass.

1.3 PERFORMANCE RE QUIREMENTS

A. General: Provide glazing systems capable of withstanding normal thermal movement and wind and impact loads (where applicable) without failure, including loss or glass breakage attributable to the following: defective manufacture, fabrication, and installation; failure of sealants or gaskets to remain watertight and airtight; deterioration of glazing materials; or other defects in construction.

B. Glass Design: Glass thicknesses indicated are minimums and are for detailing only. Confirm glass thicknesses by analyzing Project loads and in-service conditions. Provide glass lites for various size openings in nominal thicknesses indicated, but not less than thicknesses and in strengths (annealed or heat treated) required to meet or exceed the following criteria:

1. Glass Thicknesses: Select minimum glass thicknesses to comply with ASTM E 1300, according to the following requirements:
   a. Specified Design Wind Loads: As indicated.
   b. Specified Design Wind Loads: Determine design wind loads applicable to Project from basic wind speed indicated in miles per hour at 33 feet above grade, according to ASCE 7, "Minimum Design Loads for Buildings and Other Structures": Section 6.4.2, "Analytic Procedures," based on mean roof heights above grade indicated on Drawings.
   c. Probability of Breakage for Vertical Glazing: 8 lites per 1000 for lites set vertically or not more than 15 degrees off vertical and under wind action.
      1) Load Duration: 60 seconds or less.
   d. Maximum Lateral Deflection: For the following types of glass supported on all four edges, provide thickness required that limits center deflection at design wind pressure to 1/50 times the short side length or 1 inch, whichever is less.
      1) For insulating glass.
   e. Minimum Glass Thickness for Exterior Lites: Not less than ¼ inch.
   f. Thickness of Tinted and Heat-Absorbing Glass: Provide the same thickness for each tint color indicated throughout Project.

C. Thermal Movements: Provide glazing that allows for thermal movements resulting from the following maximum change (range) in ambient and surface temperatures acting on glass framing members and glazing components. Base engineering calculation on surface temperatures of materials due to both solar heat gain and nighttime-sky heat loss.
   1. Temperature Change (Range): 120 deg F, ambient; 180 deg F, material surfaces.

D. Thermal and Optical Performance Properties: Provide glass with performance properties specified based on manufacturer's published test data, as determined according to procedures indicated below:
   1. For monolithic-glass lites, properties are based on units with ¼ inch thick.
   2. For insulating-glass units, properties are based on units with lites ¼ inch thick and a nominal ½ inch wide interspace.
   3. Center-of-Glass U-Values: NFRC 100 methodology using LBL=35298 WINDOW 4.1 computer program, expressed as Btu/ sq.ft. x h x deg F.
   4. Center-of-Glass Solar Heat Gain Coefficient: NFRC 200 methodology using LBL-35298 WINDOW 4.1 computer program.
   5. Solar Optical Properties: NFRC 300.

1.4 SUBMITTALS

A. Product Data: For each glass product and glazing material indicated.

B. Samples: For the following products, in the form of 12-inch square Samples for glass.
   1. Each color of tinted float glass.
   2. Coated vision glass.
   3. Insulating glass for each designation indicated.

C. Glazing Schedule: Use same designations indicated on Drawings for glazed openings in preparing a schedule listing glass types and thicknesses for each size opening and location.

D. Product Certificates: Signed by manufacturers of glass and glazing products certifying that products furnished comply with requirements.

E. Warranties: Special warranties specified in this Section.

1.5 QUALITY ASSURANCE

A. Installer Qualifications: An experienced installer who has completed glazing similar in material, design, and extent to that indicated for Project and whose work has resulted in construction with a record of successful in-service performance.

B. Source Limitations for Clear Glass: Obtain clear float glass from one primary-glass manufacturer.

C. Source Limitations for Tinted Glass: Obtain tinted, heat absorbing, and light-reducing float glass from one primary-glass manufacturer for each tint color indicated.

D. Sour Limitations for Coated Glass: Obtain coated glass from one manufacturer for each type of coating and each type and class of float glass indicated.

E. Source Limitations for Insulating Glass: Obtain insulating-glass units from one manufacturer using the same type of glass and other components for each type of unit indicated.

F. Source Limitations for Glazing Accessories: Obtain glazing accessories from one source for each product and installation method indicated.

G. Safety Glass: Category II materials complying with testing requirements in 16 CFR 1201 and ANSI Z97.1
   1. Subject to compliance with requirements, permanently mark safety glass with certification label of Safety Glazing Certification Council or another certification agency acceptable to authorities having jurisdiction.

H. Glazing Publications: Comply with published recommendations of glass product manufacturers and organizations below, unless more stringent requirements are indicated. Refer to these publications for glazing terms not otherwise defined in this Section or in referenced standards.
   1. SIGMA Publications: SIGMA TM-3000, “Vertical Glazing Guidelines.”

I. Insulating-Glass Certification Program: Permanently marked either on spacers or on at least one component lite of units with appropriate certification label of the following inspecting and testing agency:
   1. Insulating Glass Certification Council.
   2. Associated Laboratories, Inc.
   3. National Accreditation and Management Institute.

1.6 DELIVERY, STORAGE, AND HANDLING

A. Protect glazing materials according to manufacturer's written instructions and as needed to prevent damage to glass and glazing materials from condensation, temperature changes, direct exposure to sun, or other causes.

B. For insulating-glass units that will be exposed to substantial altitude changes, comply with insulating-glass manufacturer's written recommendations for venting and sealing to avoid hermetic seal ruptures.

1.7 PROJECT CONDITIONS

A. Environmental Limitations: Do not proceed with glazing when ambient and substrate temperature conditions are outside limits permitted by glazing material manufacturers and when glazing channel substrates are wet from rain, condensation, or other causes.

1.8 WARRANTY

A. General Warranty: Special warranties specified in this Article shall not deprive Owner of other rights Owner may have under other provisions of the Contract Documents and shall be in addition to, and run concurrent with, other warranties made by Contractor under requirements of the Contract Documents.

B. Manufacturer's Special Warranty on Coated-Glass Products: Written warranty, made out to Owner and signed by coated-glass manufacturer agreeing to furnish replacements for those coated-glass units that deteriorate as defined in "Definitions" Article, f.o.b. the nearest shipping point to Project site, within specified warranty period indicated below.
   1. Warranty Period: 10 years from date of Substantial Completion.

C. Manufacturer's Special Warranty on Insulating Glass: Written warranty, made out to Owner and signed by insulating-glass manufacturer agreeing to furnish replacements for insulating-glass units that deteriorate as defined in "Definitions" Article, f.o.b. the nearest shipping point to Project site, within specified warranty period indicated below.
   1. Warranty Period: 10 years from date of Substantial Completion.

PART 2 - PRODUCTS

2.1 INSULATING GLASS

A. Insulating-Glass Units: Preassembled units consisting of sealed lites of glass separated by a dehydrated interspace, and complying with ASTM E 774 for Class CBA units and with requirements specified in this Article and in the Insulating-Glass Schedule at the end of Part 3.
   1. Provide Kind HS (heat-strengthen) float glass in place of annealed glass where needed to resist thermal stresses induced by differential shading of individual glass lites and to comply with glass design requirements specified in 'Performance Requirements" Article. Provide Kind FT (fully tempered) where safety glass is indicated.

B. Overall Unit Thickness and Thickness of Each Lite: Dimensions indicated in the Insulating-Glass Schedule at the end of Part 3 are nominal and the overall thicknesses of units are measure perpendicularly from outer surfaces of glass lites at unit's edge.

C. Sealing System: Dual seal, with primary and secondary sealants as follows:
   1. Manufacturer's standard sealants.

D. Spacer Specifications: Manufacturer's standard spacer material and construction.

E. Spacer Specifications: Manufacturer's standard spacer material and construction complying with the following requirements:
   1. Aluminum with powdered metal paint finish in color selected by Architect.
   2. Corner Construction: Manufacturer's standard corner construction.

2.2 GLAZING GASKETS

A. Lock-Strip Gaskets: Neoprene extrusions in size and shape indicated, fabricated into frames with molded corner units and zipper lock strips, complying with ASTM C 542, black.

B. Dense Compression Gaskets: Molded or extruded gaskets of material indicated below, complying with standards reference with name of elastomer indicated below, and of profile and hardness required to maintain watertight seal:
   1. Neoprene, ASTM C 864.
   2. EPDM, ASTM C 864.
   3. Silicone, ASTM C 1115.
   4. Thermoplastic polyolefin rubber, ASTM C 1115.
   5. Any material indicated above.

C. Soft Compression Gaskets: Extruded or molded, closed-cell, integral-skinned gaskets of material indicated below; complying with ASTM C 509, Type II, black; and of profile and hardness required to maintain watertight seal:
   1. Neoprene.
   2. EPDM.
   3. Silicone.
   4. Thermoplastic polyolefin rubber.
   5. Any material indicated above.

2.3 MISCELLANEOUS GLAZING MATERIALS

A. General: Provide products of material, size, and shape complying with referenced glazing standard, requirements of manufacturers of glass and other glazing materials for application indicated, and with a proven record of compatibility with surfaces contacted in installation.

B. Cleaners, Primers, and Sealers: Types recommended by sealant or gasket manufacturer.

C. Setting Blocks: Elastomeric material with a Shore A durometer hardness of 85, plus or minus 5.

D. Spacers: Elastomeric blocks or continuous extrusions with a Shore A durometer hardness required by glass manufacturer to maintain glass lites in place for installation indicated.

E. Edge Blocks: Elastomeric material of hardness needed to limit glass lateral movement (side walking).

2.4 FABRICATION OF GLASS AND OTHER GLAZING PRODUCTS

A. Fabricate glass and other glazing products in sizes required to glaze openings indicated for Project, with edge and face clearances, edge and surface conditions, and bit complying with written instructions of product manufacturer and referenced glazing standard, to comply with system performance requirements.

B. Grind smooth and polish exposed glass edges.

PART 3 - EXECUTION

3.1 EXAMINATION

A. Examine framing glazing, with Installer present, for compliance with the following:
   1. Manufacturing and installation tolerances, including those for size, squareness, and offsets at corners.
   2. Presence and functioning of weep system.
   3. Minimum required face or edge clearances.
   4. Effective sealing between joins of glass-framing members.

B. Proceed with installation only after unsatisfactory conditions have been corrected.

3.2 PREPARATION:

A. Clean glazing channels and other framing members receiving glass immediately before glazing. Remove coatings not firmly bonded to substrates.

3.3 GLAZING, GENERAL

A. Comply with combined written instructions of manufacturers of glass, sealants, gaskets, and other glazing materials, unless more stringent requirements are indicated, including those in referenced glazing publications. All glazing assemblies shall comply with ASHRAE 90.1.

B. Glazing channel dimensions, as required, provide necessary bite on glass, minimum edge and face clearance, and adequate sealant thickness, with reasonable tolerances. Adjust as required by Project conditions during installation.

C. Protect glass edges from damage during handling and installation. Remove damaged glass from Project site and legally dispose of off Project site. Damaged glass is glass with edge damage or other imperfections that, when installed, could weaken glass and impair performance and appearance.

D. Apply primers to joint surfaces where required for adhesion of sealants.

E. Install setting blocks in sill rabbets, sized and located to comply with referenced glazing publications, unless otherwise required by glass manufacturer. Set blocks in thin course of compatible sealant suitable for heel bead.

F. Do not exceed edge pressures stipulated by glass manufacturers for installing glass lites.

G. Provide spacers for glass lites where the length plus width is larger than 50 inches as follows:
   1. Locate spaces directly opposite each other on both inside and outside faces of glass. Install correct size and spacing to preserve required face clearances, unless gaskets and glazing tapes are used that have demonstrated ability to maintain required face clearances and to comply with system performance requirements.
   2. Provide 1/8-inch minimum bite of spacers on glass and use thickness equal to sealant width. With glazing tape, use thickness slightly less than final compressed thickness of tape.

H. Provide edge blocking where indicated or needed to prevent glass lites from moving sideways in glazing channel, as recommended in writing by glass manufacturer and according to requirements in referenced glazing publications.

I. Set glass lites in each series with uniform pattern, draw, bow, and similar characteristics.

J. Where wedge-shaped gaskets are driven into one side of channel to pressurize sealant or gasket on opposite side, provide adequate anchorage so gasket cannot walk out when installation is subjected to movement.

K. Square cut wedge-shaped gaskets at corners and install gaskets in a manner recommended by gasket manufacturer to prevent corners from pulling away; seal corner joints and butt joints with sealant recommended by gasket manufacturer.

3.4 GASKET GLAZING (DRY)

A. Fabricate compression gaskets in lengths recommended by gasket manufacturer to fit openings exactly, with stretch allowance during installation.

B. Insert soft compression gasket between glass and frame or fixed stop so it is securely in place with joints miter cut and bonded together at corners.

C. Center glass lites in openings on setting blocks and press firmly again soft compression gasket by inserting dense compression gaskets formed and installed to lock in place against faces of removable stops. Start gasket applications at corners and work toward centers of openings. Compress gaskets to produce a weathertight seal without developing bending stresses in glass. Seal gasket joints with sealant recommended by gasket manufacturer.

3.5 LOCK-STRIP GASKET GLAZING

A. Comply with ASTM C 716 and gasket manufacturer's written instruction. Provide supplementary wet seal and weep system, unless otherwise indicated.

3.6 PROTECTION AND CLEANING

A. Protect exterior glass from damage immediately after installation by attaching crossed streamers to framing held away from glass. Do not apply markers to glass surface. Remove nonpermanent labels, and clean surfaces.

B. Protect glass from contact with contaminating substances resulting from construction operations, including weld splatter. If, despite such protection, contaminating substances do come into contact with glass, remove them immediately as recommended by glass manufacturer.

C. Examine glass surfaces adjacent to or below exterior surfaces at frequent intervals during construction, but not less than once a month, for build-up of dirt, scum, or stains; remove as recommended by glass manufacturer.

D. Remove and replace glass that is broken, chipped, cracked, abraded, or damaged in any way, including natural causes, accidents, and vandalism, during construction period.

E. Wash glass on both exposed surfaces in each area of Project not more than four days before date scheduled for inspections that establish date of Substantial Completion. Wash glass as recommended by glass manufacturer.

3.7 MONLITHIC FLOAT-GLASS SCHEDULE

A. Uncoated Clear Float Glass: Where glass as designated below is indicated, provide Type 1 (transparent glass, flat), Class I (clear) glass lites complying with the following:
   1. Uncoated Clear Fully Tempered Float Glass Kind FT (fully tempered).

B. Uncoated Tinted Float Glass: Where glass as designated below is indicated, provide Class 2 (tinted, heat-absorbing, and light-reducing) glass lites complying with the following:
   1. Tint Color: "Solargray" by PPG Industries a cool light gray or approved equal.
   2. Uncoated Tinted Fully Tempered Float Glass: Condition A (uncoated surfaces), Kind FT (fully tempered).

3.8 INSULATING-GLASS SCHEDULE

A. Low-E Insulating Glass: Where glass of this designation is indicated, provide low-emissivity insulating-glass units complying with the following:
   1. Overall Unit Thickness and Thickness of Each Lite: 1 inch.
   2. Interspace Content: Argon.
   3. Outdoor Lite (#1 Surface): Type 1 (transparent glass, flat) Class 1 (clear) float glass.
      a. Kind FT (fully tempered), Condition A (uncoated surfaces).
   4. Indoor Lite (#2 Surface): Type I (transparent glass, flat) float glass.
      a. Class 2 (tinted, heat absorbing and light reducing). Tint Color: "Solargray" by PPG Industries a cool light-gray or approved equal. Kind FT (fully tempered), Condition A (uncoated surfaces).
   5. Low-Emissivity Coating or Film: Pyrolytic on second surface or low-emissivity coated film suspended in the interspace.

END OF SECTION 088100

SECTION 08 83 00 - MIRRORS

PART 1 - GENERAL

1.1 SUMMARY

A. Section includes the following types of silvered flat glass mirrors:
   1. Annealed monolithic glass mirrors.

1.2 ACTION SUBMITTALS

A. Product Data: For each type of product.

B. Shop Drawings: Include mirror elevations, edge details, mirror hardware, and attachment details.

C. Samples: For each type of the following:
   1. Mirrors: 12 inches square, including edge treatment on two adjoining edges.
   2. Mirror Trim: 12 inches long.

1.3 INFORMATIONAL SUBMITTALS

A. Sample Warranty: For special warranty.

1.4 CLOSEOUT SUBMITTALS

A. Maintenance Data: For mirrors to include in maintenance manuals.

1.5 PRECONSTRUCTION TESTING

A. Preconstruction Mirror Mastic Compatibility Test: Submit mirror mastic products to mirror manufacturer for testing to determine compatibility of mastic with mirror backing.

1.6 WARRANTY

A. Special Warranty: Manufacturer agrees to replace mirrors that deteriorate within specified warranty period. Deterioration of mirrors is defined as defects developed from normal use that are not attributed to mirror breakage or to maintaining and cleaning mirrors contrary to manufacturer's written instructions. Defects include discoloration, black spots, and clouding of the silver film.
   1. Warranty Period: Five years from date of Substantial Completion.

PART 2 - PRODUCTS

2.1 MANUFACTURERS

A. Manufacturers: Basis of Design: Binswanger Mirror: A division of Vitro American, Inc. or Architects approved equal.

2.2 SILVERED FLAT GLASS MIRRORS

A. Mirrors, General: ASTM C 1503.

B. Annealed Monolithic Glass Mirrors: Mirror Select Quality, clear.
   1. Nominal Thickness: 6.0 mm.

2.3 MISCELLANEOUS MATERIALS

A. Setting Blocks: Elastomeric material with a Shore, Type A durometer hardness of 85, plus or minus 5.

B. Edge Sealer: Coating approved by mirror manufacturer.

C. Mirror Mastic: An adhesive setting compound, asbestos-free, produced specifically for setting mirrors.

2.4 MIRROR HARDWARE

A. Aluminum J-Channels: Aluminum extrusions with a return deep enough to produce a glazing channel to accommodate mirrors of thickness indicated and in lengths required to cover edges of mirrors in a single piece.
   1. Bottom Trim: J-channels formed with front leg and back leg not less than 3/8 and 7/8 inch in height, respectively, and a thickness of not less than 0.04 inch.
   2. Top Trim: J-channels formed with front leg and back leg not less than 5/8 and 1 inch in height, respectively, and a thickness of not less than 0.04 inch.
   3. Finish: Clear bright anodized.

B. Fasteners: Fabricated of same basic metal and alloy as fastened metal and matching it in finished color and texture where fasteners are exposed.

2.5 FABRICATION

A. Mirror Edge Treatment: Flat polished. Seal edges of mirrors with edge sealer.

PART 3 - EXECUTION

3.1 EXAMINATION

A. Examine substrates, over which mirrors are to be mounted, with Installer present, for compliance with installation tolerances, substrate preparation, and other conditions affecting performance of the Work.

B. Proceed with installation only after unsatisfactory conditions have been corrected and surfaces are dry.

3.2 PREPARATION

A. Comply with mastic manufacturer's written installation instructions for preparation of substrates, including coating substrates with mastic manufacturer's special bond coating where applicable.

3.3 INSTALLATION

A. General: Install mirrors to comply with mirror manufacturer's written instructions and with referenced GANA publications. Mount mirrors accurately in place in a manner that avoids distorting reflected images.

B. Install mirrors with mirror hardware. Attach mirror hardware securely to mounting surfaces with mechanical fasteners installed with anchors or inserts as applicable. Install fasteners so heads do not impose point loads on backs of mirrors.
   1. Apply mastic to comply with mastic manufacturer's written instructions for coverage and to allow air circulation between back of mirrors and face of mounting surface.

C. Clean exposed surface of mirrors not more than four days before date scheduled for inspections that establish date of Substantial Completion. Clean mirrors as recommended in writing by mirror manufacturer.

END OF SECTION 088300

SECTION 09 22 16 - NON-STRUCTURAL METAL FRAMING

PART 1 - GENERAL

1.1 SUMMARY

A. Section Includes:
1. Non-load-bearing steel framing systems for interior partitions.
2. Suspension systems for interior ceilings and soffits.

1.2 ACTION SUBMITTALS

A. Product Data: For each type of product.

PART 2 - PRODUCTS

2.1 PERFORMANCE REQUIREMENTS

A. STC-Rated Assemblies: For STC-rated assemblies, provide materials and construction identical to those tested in assembly indicated, according to ASTM E 90 and classified according to ASTM E 413 by an independent testing agency.

2.2 FRAMING SYSTEMS

A. Framing Members, General: Comply with ASTM C 754 for conditions indicated.
1. Steel Sheet Components: Comply with ASTM C 645 requirements for metal unless otherwise indicated.
2. Protective Coating: ASTM A 653/A 653M, G60, hot-dip galvanized unless otherwise indicated.

B. Studs and Runners: ASTM C 645.
1. Steel Studs and Runners:
a. Minimum Base-Metal Thickness: As required by performance requirements for horizontal deflection.
b. Depth: As indicated on Drawings.

C. Slip-Type Head Joints: Where indicated, provide one of the following:
1. Single Long-Leg Runner System: ASTM C 645 top runner with 2-inch-deep flanges in thickness not less than indicated for studs, installed with studs friction fit into top runner and with continuous bridging located within 12 inches of the top of studs to provide lateral bracing.
2. Double-Runner System: ASTM C 645 top runners, inside runner with 2-inch-deep flanges in thickness not less than indicated for studs and fastened to studs, and outer runner sized to friction fit inside runner.

3. Deflection Track: Steel sheet top runner manufactured to prevent cracking of finishes applied to interior partition framing resulting from deflection of structure above; in thickness not less than indicated for studs and in width to accommodate depth of studs.

D. Flat Strap and Backing Plate: Steel sheet for blocking and bracing in length and width indicated.
1. Minimum Base-Metal Thickness: 0.0269 inch.

E. Cold-Rolled Channel Bridging: Steel, 0.0538-inch minimum base-metal thickness, with minimum 1/2-inch-wide flanges.
1. Depth: 1-1/2 inches.
2. Clip Angle: Not less than 1-1/2 by 1-1/2 inches, 0.068-inch-thick, galvanized steel.

F. Hat-Shaped, Rigid Furring Channels: ASTM C 645.
1. Minimum Base-Metal Thickness: 0.0179 inch.
2. Depth: 1-1/2 inches.

G. Resilient Furring Channels: 1/2-inch-deep, steel sheet members designed to reduce sound transmission.
1. Configuration: Asymmetrical or hat shaped.

H. Cold-Rolled Furring Channels: 0.053-inch uncoated-steel thickness, with minimum 1/2-inch-wide flanges.
1. Depth: 3/4 inch.
2. Furring Brackets: Adjustable, corrugated-edge-type steel sheet with minimum uncoated-steel thickness of 0.0329 inch.
3. Tie Wire: ASTM A 641/A 641M, Class 1 zinc coating, soft temper, 0.062-inch-diameter wire, or double strand of 0.048-inch-diameter wire.

I. Z-Shaped Furring: With slotted or nonslotted web, face flange of 1-1/4 inches, wall attachment flange of 7/8 inch, minimum uncoated-metal thickness of 0.0179 inch, and depth required to fit insulation thickness indicated.

2.3 SUSPENSION SYSTEMS

A. Tie Wire: ASTM A 641/A 641M, Class 1 zinc coating, soft temper, 0.062-inch-diameter wire, or double strand of 0.048-inch-diameter wire.

B. Wire Hangers: ASTM A 641/A 641M, Class 1 zinc coating, soft temper, 0.16 inch in diameter.

C. Flat Hangers: Steel sheet, 1 by 3/16 inch by length as required.

D. Carrying Channels: Cold-rolled, commercial-steel sheet with a base-metal thickness of 0.0538 inch and minimum 1/2-inch-wide flanges.
1. Depth: [As indicated on Drawings] [2-1/2 inches] [2 inches] [1-1/2 inches].

E. Furring Channels (Furring Members):
1. Cold-Rolled Channels: 0.0538-inch uncoated-steel thickness, with minimum 1/2-inch-wide flanges, 3/4 inch deep.

2. Steel Studs and Runners: ASTM C 645.
   a. Minimum Base-Metal Thickness: 0.0179 inch.
   b. Depth: 2-1/2 inches.
3. Hat-Shaped, Rigid Furring Channels: ASTM C 645, 7/8 inch deep.
   a. Minimum Base-Metal Thickness: 0.0179 inch.
4. Resilient Furring Channels: 1/2-inch-deep members designed to reduce sound transmission.
   a. Configuration: Asymmetrical or hat shaped.

2.4 AUXILIARY MATERIALS

A. General: Provide auxiliary materials that comply with referenced installation standards.
   1. Fasteners for Metal Framing: Of type, material, size, corrosion resistance, holding power, and other properties required to fasten steel members to substrates.

B. Isolation Strip at Exterior Walls: Provide the following:
   1. Foam Gasket: Adhesive-backed, closed-cell vinyl foam strips that allow fastener penetration without foam displacement, 1/8 inch thick, in width to suit steel stud size.

PART 3 - EXECUTION

3.1 INSTALLATION, GENERAL

A. Installation Standard: ASTM C 754.
   1. Gypsum Board Assemblies: Also comply with requirements in ASTM C 840 that apply to framing installation.

B. Install framing and accessories plumb, square, and true to line, with connections securely fastened.

C. Install supplementary framing, and blocking to support fixtures, equipment services, heavy trim, grab bars, toilet accessories, furnishings, or similar construction.

D. Install bracing at terminations in assemblies.

E. Do not bridge building control and expansion joints with non-load-bearing steel framing members. Frame both sides of joints independently.

3.2 INSTALLING FRAMED ASSEMBLIES

A. Install framing system components according to spacings indicated, but not greater than spacings required by referenced installation standards for assembly types.

B. Where studs are installed directly against exterior masonry walls or dissimilar metals at exterior walls, install isolation strip between studs and exterior wall.

C. Install studs so flanges within framing system point in same direction.

D. Install tracks (runners) at floors and overhead supports. Extend framing full height to structural supports or substrates above suspended ceilings except where partitions are indicated to terminate at suspended ceilings. Continue framing around ducts that penetrate partitions above ceiling.
   1. Slip-Type Head Joints: Where framing extends to overhead structural supports, install to produce joints at tops of framing systems that prevent axial loading of finished assemblies.
   2. Door Openings: Screw vertical studs at jambs to jamb anchor clips on door frames; install runner track section (for cripple studs) at head and secure to jamb studs.
      a. Install two studs at each jamb unless otherwise indicated.
      b. Install cripple studs at head adjacent to each jamb stud, with a minimum 1/2-inch clearance from jamb stud to allow for installation of control joint in finished assembly.
      c. Extend jamb studs through suspended ceilings and attach to underside of overhead structure.
   3. Other Framed Openings: Frame openings other than door openings the same as required for door openings unless otherwise indicated. Install framing below sills of openings to match framing required above door heads.
   4. Sound-Rated Partitions: Install framing to comply with sound-rated assembly indicated.

E. Direct Furring:
   1. Screw to framing.
   2. Attach to concrete or masonry with stub nails, screws designed for masonry attachment, or powder-driven fasteners spaced 24 inches o.c.

F. Z-Shaped Furring Members:
   1. Erect insulation, specified in Section 072100 "Thermal Insulation," vertically and hold in place with Z-shaped furring members spaced 24 inches o.c.
   2. Except at exterior corners, securely attach narrow flanges of furring members to wall with concrete stub nails, screws designed for masonry attachment, or powder-driven fasteners spaced 24 inches o.c.
   3. At exterior corners, attach wide flange of furring members to wall with short flange extending beyond corner; on adjacent wall surface, screw-attach short flange of furring channel to web of attached channel. At interior corners, space second member no more than 12 inches from corner and cut insulation to fit.

G. Installation Tolerance: Install each framing member so fastening surfaces vary not more than 1/8 inch from the plane formed by faces of adjacent framing.

3.3 INSTALLING SUSPENSION SYSTEMS

A. Install suspension system components according to spacings indicated, but not greater than spacings required by referenced installation standards for assembly types.

B. Isolate suspension systems from building structure where they abut or are penetrated by building structure to prevent transfer of loading imposed by structural movement.

C. Suspend hangers from building structure as follows:
   1. Install hangers plumb and free from contact with insulation or other objects within ceiling plenum that are not part of supporting structural or suspension system.
      a. Splay hangers only where required to miss obstructions and offset resulting horizontal forces by bracing, countersplaying, or other equally effective means.
   2. Where width of ducts and other construction within ceiling plenum produces hanger spacings that interfere with locations of hangers required to support standard suspension system members, install supplemental suspension members and hangers in the form of trapezes or equivalent devices.
      a. Size supplemental suspension members and hangers to support ceiling loads within performance limits established by referenced installation standards.
   3. Wire Hangers: Secure by looping and wire tying, either directly to structures, or other devices and fasteners that are secure and appropriate for substrate, and in a manner that will not cause hangers to deteriorate or otherwise fail.
   4. Flat Hangers: Secure to structure, including intermediate framing members, by attaching to devices and fasteners that are secure and appropriate for structure and hanger, and in a manner that will not cause hangers to deteriorate or otherwise fail.
   5. Do not attach hangers to steel roof deck.
   6. Do not connect or suspend steel framing from ducts, pipes, or conduit.

D. Installation Tolerances: Install suspension systems that are level to within 1/8 inch in 12 feet measured lengthwise on each member that will receive finishes and transversely between parallel members that will receive finishes.

END OF SECTION 092216

SECTION 092900 - GYPSUM BOARD

PART 1 - GENERAL

1.1 SUMMARY

A. Section Includes:
   1. Interior gypsum board.
   2. Tile backing panels.
   3. Texture finishes.

1.2 ACTION SUBMITTALS

A. Product Data: For each type of product.

B. Samples: For each texture finish indicated on same backing indicated for Work.

PART 2 - PRODUCTS

2.1 PERFORMANCE REQUIREMENTS

A. STC-Rated Assemblies: For STC-rated assemblies, provide materials and construction identical to those tested in assembly indicated according to ASTM E 90 and classified according to ASTM E 413 by an independent testing agency.

2.2 GYPSUM BOARD, GENERAL

A. Size: Provide maximum lengths and widths available that will minimize joints in each area and that correspond with support system indicated.

2.3 INTERIOR GYPSUM BOARD

A. Manufacturers: Subject to compliance with requirements, available manufacturers offering products that may be incorporated into the Work include, but are not limited to, the following:
   1. Georgia-Pacific Gypsum LLC.
   2. National Gypsum Company.
   3. USG Corporation.

B. Gypsum Board, Type X: ASTM C 1396/C 1396M.
   1. Thickness: 5/8 inch.
   2. Long Edges: Tapered.

C. Gypsum Ceiling Board: ASTM C 1396/C 1396M.
   1. Thickness: 1/2 inch.
   2. Long Edges: Tapered.

D. Abuse-Resistant Gypsum Board: ASTM C 1396/C 1396M gypsum board, tested according to ASTM C 1629/C 1629M.
   1. Core: 5/8 inch, Type X.
   2. Surface Abrasion: ASTM C 1629/C 1629M, meets or exceeds Level 1 requirements.
   3. Indentation: ASTM C 1629/C 1629M, meets or exceeds Level 1 requirements.
   4. Soft-Body Impact: ASTM C 1629/C 1629M, meets or exceeds Level 1 requirements.
   5. Long Edges: Tapered.
   6. Mold Resistance: ASTM D 3273, score of 10 as rated according to ASTM D 3274.

2.4 TILE BACKING PANELS

A. Glass-Mat, Water-Resistant Backing Board: ASTM C 1178/C 1178M, with manufacturer's standard edges.
   1. Core: 5/8 inch, Type X.
   2. Mold Resistance: ASTM D 3273, score of 10 as rated according to ASTM D 3274.

2.5 TRIM ACCESSORIES

A. Interior Trim: ASTM C 1047.
   1. Material: Galvanized or aluminum-coated steel sheet, rolled zinc, or paper-faced.
   2. Shapes:
      a. Cornerbead.
      b. LC-Bead: J-shaped; exposed long flange receives joint compound.
      c. L-Bead: L-shaped; exposed long flange receives joint compound.
      d. U-Bead: J-shaped; exposed short flange does not receive joint compound.
      e. Expansion (control) joint.

2.6 JOINT TREATMENT MATERIALS

A. General: Comply with ASTM C 475/C 475M.

B. Joint Tape:
   1. Interior Gypsum Board: Paper.
   2. Tile Backing Panels: As recommended by panel manufacturer.

C. Joint Compound for Interior Gypsum Board: For each coat, use formulation that is compatible with other compounds applied on previous or for successive coats.
   1. Prefilling: At open joints, beveled panel edges, and damaged surface areas, use setting-type taping compound.
   2. Embedding and First Coat: For embedding tape and first coat on joints, fasteners, and trim flanges, use setting-type taping compound.
      a. Use setting-type compound for installing paper-faced metal trim accessories.

3. Fill Coat: For second coat, use setting-type, sandable topping compound.
4. Finish Coat: For third coat, use setting-type, sandable topping compound.
5. Skim Coat: For final coat of Level 5 finish, use setting-type, sandable topping compound.

D. Joint Compound for Tile Backing Panels:
1. Glass-Mat, Water-Resistant Backing Panel: As recommended by backing panel manufacturer.

2.7 AUXILIARY MATERIALS

A. General: Provide auxiliary materials that comply with referenced installation standards and manufacturer's written instructions.

B. Steel Drill Screws: ASTM C 1002 unless otherwise indicated.
1. Use screws complying with ASTM C 954 for fastening panels to steel members from 0.033 to 0.112 inch thick.

C. Sound-Attenuation Blankets: ASTM C 665, Type I (blankets without membrane facing) produced by combining thermosetting resins with mineral fibers manufactured from glass, slag wool, or rock wool.

D. Acoustical Sealant: Manufacturer's standard nonsag, paintable, nonstaining latex sealant complying with ASTM C 834. Product effectively reduces airborne sound transmission through perimeter joints and openings in building construction as demonstrated by testing representative assemblies according to ASTM E 90.
1. Products: Subject to compliance with requirements, available products that may be incorporated into the Work include, but are not limited to, the following:
a. Accumetric LLC; BOSS 824 Acoustical Sound Sealant.
b. Specified Technologies, Inc.: Smoke N Sound Acoustical Sealant.
c. USG Corporation: SHEETROCK Acoustical Sealant.

E. Thermal Insulation: As specified in Section 072100 "Thermal Insulation."

2.8 TEXTURE FINISHES

A. Primer: As recommended by textured finish manufacturer.

B. Non-Aggregate Finish: Premixed, vinyl texture finish for spray application.
1. Products: Subject to compliance with requirements, available products that may be incorporated into the Work include, but are not limited to, the following:
a. CertainTeed Corp.: ProcRoc Easi-Tex Spray Texture.
b. National Gypsum Company: Perfect Spray EM Texture.
c. US Corporation: BEADEX FasTex Wall and Ceiling Spray Texture.
2. Texture: Light Orange peel.

PART 3 - EXECUTION

3.1 APPLYING AND FINISHING PANELS

A. Examine panels before installation. Reject panels that are wet, moisture damaged, and mold damaged.

B. Comply with ASTM C 840.

C. Isolate perimeter of gypsum board applied to non-load-bearing partitions at structural abutments. Provide 1/4- to 1/2-inch-wide spaces at these locations and trim edges with edge trim where edges of panels are exposed. Seal joints between edges and abutting structural surfaces with acoustical sealant.

D. For trim with back flanges intended for fasteners, attach to framing with same fasteners used for panels. Otherwise, attach trim according to manufacturer's written instructions.

E. Prefill open joints, beveled edges, and damaged surface areas.

F. Apply joint tape over gypsum board joints, except for trim products specifically indicated as not intended to receive tape.

G. Gypsum Board Finish Levels: Finish panels to levels indicated below and according to ASTM C 840:
   1. Level 1: Ceiling plenum areas, concealed areas, and where indicated.
   2. Level 2: Panels that are substrate for tile.
   3. Level 3: Where indicated on Drawings.
   4. Level 4: At panel surfaces that will be exposed to view unless otherwise indicated.
      a. Primer and its application to surfaces are specified in Section 099123 "Interior Painting."
   5. Level 5: Where indicated on Drawings.
      a. Primer and its application to surfaces are specified in Section 099123 "Interior Painting."

3.2 APPLYING TEXTURE FINISHES

A. Surface Preparation and Primer: Prepare and apply primer to gypsum panels and other surfaces receiving texture finishes. Apply primer to surfaces that are clean, dry, and smooth.

B. Texture Finish Application: Mix and apply finish using powered spray equipment, to produce a uniform texture matching approved mockup and free of starved spots or other evidence of thin application or of application patterns.

3.3 PROTECTION

A. Protect installed products from damage from weather, condensation, direct sunlight, construction, and other causes during remainder of the construction period.

B. Remove and replace panels that are wet, moisture damaged, and mold damaged.

END OF SECTION 092900

SECTION 09 30 13 - CERAMIC TILING

PART 1 - GENERAL

1.1 SUMMARY

A. Section Includes:
   1. Porcelain tile.

1.2 ACTION SUBMITTALS

A. Product Data: For each type of product.

B. Samples:
   1. Each type and composition of tile and for each color and finish required.
   2. Assembled samples mounted on a rigid panel, with grouted joints, for each type and composition of tile and for each color and finish required.

1.3 INFORMATIONAL SUBMITTALS

A. Qualification Data: For Installer.

1.4 QUALITY ASSURANCE

A. Installer Qualifications:
   1. Installer is a five-star member of the National Tile Contractors Association or a Trowel of Excellence member of the Tile Contractors' Association of America.

B. Mockups: Build mockups to verify selections made under Sample submittals and to demonstrate aesthetic effects and set quality standards for materials and execution.
   1. Build mockup of each type of floor tile installation.
   2. Subject to compliance with requirements, approved mockups may become part of the completed Work if undisturbed at time of Substantial Completion.

PART 2 - PRODUCTS

2.1 PRODUCTS, GENERAL

A. ANSI Ceramic Tile Standard: Provide Standard-grade tile that complies with ANSI A137.1 for types, compositions, and other characteristics indicated.

B. ANSI Standards for Tile Installation Materials: Provide materials complying with ANSI A108.02, ANSI standards referenced in other Part 2 articles, ANSI standards referenced by TCNA installation methods specified in tile installation schedules, and other requirements specified.

2.2 TILE PRODUCTS

A. Ceramic Tile Type CT-1: Textured porcelain tile.
   1. Basis of Design: Daltile, Series-Next EC1, or Architect approved equal.
   2. Certification: Tile certified by the Porcelain Tile Certification Agency.
   3. Face Size: 24 x 48 inches.
   4. Face Size Variation: Rectified.
   5. Thickness: Manufacturer’s standard thickness for Product.
   6. Face: Textured.
   7. Dynamic Coefficient of Friction: Not less than 0.42.
   8. Tile Color: J104 CITY
   9. Grout Color: As selected by Architect from manufacturer's full range.

2.3 SETTING MATERIALS

A. Modified Dry-Set Mortar (Thinset): ANSI A118.4.
   1. Provide prepackaged, dry-mortar mix combined with liquid-latex additive at Project site.

2.4 GROUT MATERIALS

A. High-Performance Tile Grout: ANSI A118.7.
   1. Polymer Type: Liquid-latex form for addition to prepackaged dry-grout mix.

2.5 MISCELLANEOUS MATERIALS

A. Floor Sealer: Manufacturer's standard product for sealing grout joints and that does not change color or appearance of grout.

PART 3 - EXECUTION

3.1 EXAMINATION

A. Examine substrates, areas, and conditions where tile will be installed, with Installer present, for compliance with requirements for installation tolerances and other conditions affecting performance of the Work.

1. Verify that substrates for setting tile are firm; dry; clean; free of coatings that are incompatible with tile-setting materials, including curing compounds and other substances that contain soap, wax, oil, or silicone; and comply with flatness tolerances required by ANSI A108.01 for installations indicated.
2. Verify that concrete substrates for tile floors installed with thinset mortar comply with surface finish requirements in ANSI A108.01 for installations indicated.

B. Proceed with installation only after unsatisfactory conditions have been corrected.

3.2 PREPARATION

A. Fill cracks, holes, and depressions in concrete substrates for tile floors installed with thinset mortar with trowelable leveling and patching compound specifically recommended by tile-setting material manufacturer.

B. Blending: For tile exhibiting color variations, verify that tile has been factory blended and packaged so tile units taken from one package show same range of colors as those taken from other packages and match approved Samples. If not factory blended, either return to manufacturer or blend tiles at Project site before installing.

3.3 CERAMIC TILE INSTALLATION

A. Comply with TCNA's "Handbook for Ceramic, Glass, and Stone Tile Installation" for TCNA installation methods specified in tile installation schedules. Comply with parts of the ANSI A108 series "Specifications for Installation of Ceramic Tile" that are referenced in TCNA installation methods, specified in tile installation schedules, and apply to types of setting and grouting materials used.
   1. For the following installations, follow procedures in the ANSI A108 series of tile installation standards for providing 95 percent mortar coverage:
      a. Tile floors consisting of tiles 8 by 8 inches or larger.

B. Extend tile work into recesses and under or behind equipment and fixtures to form complete covering without interruptions unless otherwise indicated. Terminate work neatly at obstructions, edges, and corners without disrupting pattern or joint alignments.

C. Accurately form intersections and returns. Perform cutting and drilling of tile without marring visible surfaces. Carefully grind cut edges of tile abutting trim, finish, or built-in items for straight aligned joints. Fit tile closely to electrical outlets, piping, fixtures, and other penetrations so plates, collars, or covers overlap tile.

D. Jointing Pattern: Lay tile in pattern as indicated. Lay out tile work to minimize the use of pieces that are less than half of a tile. Provide uniform joint widths unless otherwise indicated.

E. Joint Widths: Unless otherwise indicated, install tile with the following joint widths:
   1. Porcelain Tile: 7/16 inch.

F. Expansion Joints: Provide expansion joints and other sealant-filled joints, including control, contraction, and isolation joints, where indicated. Form joints during installation of setting materials, and tile. Do not saw-cut joints after installing tiles.
   1. Where joints occur in concrete substrates, locate joints in tile surfaces directly above them.

G. Floor Sealer: Apply floor sealer to grout joints in tile floors according to floor-sealer manufacturer's written instructions. As soon as floor sealer has penetrated grout joints, remove excess sealer and sealer from tile faces by wiping with soft cloth.

3.4 INTERIOR CERAMIC TILE INSTALLATION SCHEDULE

A. Interior Floor Installations, Concrete Subfloor:
   1. Ceramic Tile Installation: TCNA F113; thinset mortar.
      a. Ceramic Tile Type: CT-1.
      b. Thinset Mortar: Modified dry-set mortar.
      c. Grout: High-performance unsanded grout.

END OF SECTION 093013

SECTION 09 50 00 - ACOUSTICAL PANEL CEILINGS

PART 1 - GENERAL

1.1 SUMMARY

A. Section Includes:
   1. Acoustical ceiling panels.
   2. Exposed grid suspension system.
   3. Wire hangers, fasteners, main runners, cross tees, and wall angle moldings.

1.2 SUBMITTALS

A. Product Data: Submit manufacturer's technical data for each type of acoustical ceiling unit and suspension system required.

B. Samples: Minimum 6 inch x 6 inch samples of specified acoustical panel; 8 inch long samples of exposed wall molding and suspension system, including main runner and 4 foot cross tees.

C. Shop Drawings: Layout and details of acoustical ceilings show locations of items, which are to be coordinated with, or supported by the ceilings.

D. Certifications: Manufacturer's certifications that products comply with specified requirements, including laboratory reports showing compliance with specified tests and standards.

1.3 QUALITY ASSURANCE

A. Single-Source Responsibility: Provide acoustical panel units and grid components by a single manufacturer.

B. Fire Performance Characteristics: Identify acoustical ceiling components with appropriate markings of applicable testing and inspecting organization.
   1. Surface Burning Characteristics: As follows, tested per ASTM E 84
      a. Flame Spread: 25 or less.
      b. Smoke Developed: 50 or less.

C. Handle acoustical ceiling units carefully to avoid chipping edges or damaged units in any way.

1.4 DELIVERY, STORAGE, AND HANDLING

A. Deliver acoustical ceiling units to project site in original, unopened packages and store them in a fully enclosed space where they will be protected against damage from moisture, direct sunlight, surface contamination, and other causes.

B. Before installing acoustical ceiling units, permit them to reach room temperature and a stabilized moisture content.

C. Handle acoustical ceiling units carefully to avoid chipping edges or damaged units in any way.

1.5 PROJECT CONDITIONS

A. Space Enclosure:

All ceiling products and suspension systems must be installed and maintained in accordance with manufacturer's written installation instructions for that product in effect at the time of installation and best industry practice. Prior to installation, the ceiling product must be kept clean and dry, in an environment that is between 32°F and 120°F and not subject to Abnormal Conditions. Abnormal conditions include exposure to chemical fumes, vibrations, moisture from conditions such as building leaks or condensation, excessive humidity, or excessive dirt or dust buildup.

HumiGuard Plus Ceilings: Installation of the products shall be carried out where the temperature is between 32°F (0° C) and 120°F (49° C). It is not necessary for the area to be enclosed or for HVAC systems to be functioning. All wet work (plastering, concrete, etc.) must be complete and dry. The ceilings must be maintained to avoid excessive dirt or dust buildup that would provide a medium for microbial growth on ceiling panels. Microbial protection does not extend beyond the treated surface as received from the factory, and does not protect other materials that contact the treated surface such as supported insulation materials.

1.6 WARRANTY

A. Blades: Submit a written warranty executed by the manufacturer, agreeing to repair or replace acoustical panels that fail within the warranty period. Failures include, but are not limited to:
   1. Blade Panels: Sagging and warping as a result of defects in materials or factory workmanship.
   2. Grid System: Rusting and manufacturer's defects.

B. Warranty Period:
   1. Blades: One (1) year from date of substantial completion.
   2. Suspension System: Ten (10) years from date of substantial completion

C. The Warranty shall not deprive the Owner of other rights the Owner may have under other provisions of the Contract Documents and will be in addition to and run concurrent with other warranties made by the Contractor under the requirements of the Contract Documents.

PART 2 - PRODUCTS

2.1 MANUFACTURERS

A. Basis of Design Armstrong SoundScapes and Prelude XL for acoustical panel ceilings and prelude XL 360 suspension system or Architect approved equal.

2.2 LINEAR CEILING UNITS

A. SoundScapes Blades.

B. Suspension System

2.3 BLADES

A. Surface Texture: Fine.

B. Composition: Fiberglass.

C. Color:

D. Size: 22x94x2 (Item 3923).

E. Edge Profile: Square for interface with compatible grid.

F. Sabin: ASTM C 423; 20% Coverage = 1.38; 50% Coverage =1.49.

G. Flame Spread: ASTM E 1264; Class A (UL).

H. Light Reflectance (LR): ASTM E 1477; White Panel: Light Reflectance: 0.9.

I. Dimensional Stability: HumiGuard Plus; Anti-Microbial, inherent.

2.4 INDIVIDUAL SUSPENSION

A. Aircraft Cable: Acceptable product as manufactured by Armstrong World Industries
   1. AC1210 - #12 Aircraft Cable, length 120”.
   2. AC1215 - #12 Aircraft Cable, length 180”.
   3. AC1220 - #12 Aircraft Cable, length 240”.
   4. ACHC – Height Adjustable Hardware.
   5. Standard Wire – 12 gauge Hanger Wire item 7891.

2.5 METAL SUSPENSION SYSTEMS

A. Components: Main beams and cross tees, base metal and end detail, fabricated from commercial quality hot dipped galvanized steel complying with ASTM A 653. Main beams and cross tees are double-web steel construction with 15/16” type exposed flange design. Exposed surfaces chemically cleansed, capping prefinished galvanized steel in baked polyester paint. Main beams and cross tees shall have rotary stitching.
   1. Structural Classification: ASTM C 635 Heavy duty.
   2. Color: Black.
   3. Product:
      a. Prelude XL 360° painted black as manufactured by Armstrong World Industries.
         1) 730136 HD Main Beam
         2) XL734036 48: Cross Tee
         3) XL732036 24” Cross Tee
         4) 780036 7/8” Wall Angle
      b. 360° Painted made to order colors as manufactured by Armstrong World Industries
         1) 56418 HD Main Beam
         2) 56421 48” Cross Tee
         3) 56419 24” Cross Tee
         4) 7800 7/8” Wall Angle

B. Attachment Devices: Size for five times design load indicated in ASTM C 635, Table 1, Direct Hung unless otherwise indicated.

C. Wire for Hangers and Ties: ASTM A 641, Class 1 zinc coating, soft annealed, with a yield stress load of at least time three design load, but not less than 12 gauge.

D. Accessories.

PART 3 - EXECUTION

3.1 EXAMINATION

A. Do not proceed with installation until all wet work such as concrete, terrazzo, plastering and painting has been completed and thoroughly dried out, unless expressly permitted by manufacturer's printed recommendations. (Exception: HumiGuard Max Ceilings).

3.2 PREPARATION

A. A.Coordination: Furnish layouts for preset inserts, clips, and other ceiling anchors whose installation is specified in other sections.
   1. Furnish concrete inserts and similar devices to other trades for installation well in advance of time needed for coordination of other work.

3.3 INSTALLATION

A. Install SoundScapes Blades per manufacturer's installation instructions.

B. Install suspension system per ASTM C636 unless otherwise noted in the manufactures Installation Instructions.

3.4 ADJUSTING AND CLEANING

A. Replace damaged and broken blades.

B. Clean exposed surfaces of blades, including trim, and suspension members comply with manufacturer's instructions for cleaning and touch up of minor finish damage.

C. Remove and replace work that cannot be successfully cleaned and repaired to permanently eliminate evidence of damage.

END OF SECTION 095000

SECTION 09 51 13 - ACOUSTICAL PANEL CEILINGS

PART 1 - GENERAL

1.1 SUMMARY

A. Section includes acoustical panels and exposed suspension systems for interior ceilings.

1.2 PREINSTALLATION MEETINGS

A. Preinstallation Conference: Conduct conference at Project site.

1.3 ACTION SUBMITTALS

A. Product Data: For each type of product.

B. Samples: For each exposed product and for each color and texture specified.

1.4 INFORMATIONAL SUBMITTALS

A. Coordination Drawings: Reflected ceiling plans, drawn to scale, and coordinated with each other, using input from installers of the items involved.

B. Product test reports.

C. Research reports.

1.5 CLOSEOUT SUBMITTALS

A. Maintenance data.

PART 2 - PRODUCTS

2.1 PERFORMANCE REQUIREMENTS

A. Surface-Burning Characteristics: Comply with ASTM E 84; testing by a qualified testing agency. Identify products with appropriate markings of applicable testing agency.
   1. Flame-Spread Index: Class A according to ASTM E 1264.
   2. Smoke-Developed Index: 50 or less.

2.2 ACOUSTICAL PANELS act-1

A. Basis of Design: Armstrong 9/16” Beveled Tegular Item No. 1902 or Architects approved equal.

B. Acoustical Panel Standard: Manufacturer's standard panels according to ASTM E 1264.

C. Classification: Type IV, Form 2, Pattern E.

D. Color: White.

E. Light Reflectance (LR): 0.90.

F. Ceiling Attenuation Class (CAC): 35.

G. Noise Reduction Coefficient (NRC): 0.70.

H. Edge/Joint Detail: Beveled Tegular.

I. Thickness: 3/4 inch.

J. Modular Size: 24 by 24 inches.

2.3 METAL SUSPENSION SYSTEM <Insert drawing designation>

A. Basis of Design: Armstrong 2 x 2 Suprafine ML 9/16 Inch Exposed Tee Suspension System or Architects approved equal.

B. Metal Suspension-System Standard: Manufacturer's standard, direct-hung, metal suspension system and accessories according to ASTM C 635/C 635M.

C. Narrow-Face, Capped, Double-Web, Steel Suspension System: Main and cross runners roll formed from cold-rolled steel sheet; prepainted, electrolytically zinc coated, or hot-dip galvanized, G30 coating designation; with prefinished 9/16-inch-wide metal caps on flanges.
   1. Structural Classification: Intermediate duty system.
   2. End Condition of Cross Runners: butt-edge type.
   3. Face Design: Flat, flush.
   4. Cap Material: Cold-rolled steel.
   5. Cap Finish: Painted white.

2.4 ACCESSORIES

A. Attachment Devices: Size for five times the design load indicated in ASTM C 635/C 635M, Table 1, "Direct Hung," unless otherwise indicated. Comply with seismic design requirements.

2.5 METAL EDGE MOLDINGS AND TRIM

A. Roll-Formed, Sheet-Metal Edge Moldings and Trim: Type and profile indicated or, if not indicated, manufacturer's standard moldings for edges and penetrations that comply with seismic design requirements; formed from sheet metal of same material, finish, and color as that used for exposed flanges of suspension-system runners.

PART 3 - EXECUTION

3.1 PREPARATION

A. Measure each ceiling area and establish layout of acoustical panels to balance border widths at opposite edges of each ceiling. Avoid using less-than-half-width panels at borders unless otherwise indicated.

B. Layout openings for penetrations centered on the penetrating items.

3.2 INSTALLATION

A. Install acoustical panel ceilings according to ASTM C 636/C 636M and manufacturer's written instructions.

B. Install edge moldings and trim of type indicated at perimeter of acoustical ceiling area and where necessary to conceal edges of acoustical panels.
   1. Apply acoustical sealant in a continuous ribbon concealed on back of vertical legs of moldings before they are installed.
   2. Do not use exposed fasteners, including pop rivets, on moldings and trim.
   3. Arrange directionally patterned acoustical panels as follows:
      a. As indicated on reflected ceiling plans.

END OF SECTION 095113

SECTION 09 51 23 - ACOUSTICAL TILE CEILINGS

PART 1 - GENERAL

1.1 RELATED DOCUMENTS

A. Drawings and general provisions of the Contract, including General and Supplementary Conditions and Division 01 Specification Sections, apply to this Section.

1.2 SUMMARY

A. Section Includes:
1. Acoustical tiles for ceilings.
2. Concealed suspension systems.
3. Exposed suspension systems.
4. Custom perimeter trim.

1.3 PREINSTALLATION MEETINGS

A. Preinstallation Conference: Conduct conference at Project site.

1.4 ACTION SUBMITTALS

A. Product Data: For each type of product.

B. Samples: For each exposed product and for each color and texture specified, 6-inches- in size.

C. Samples for Verification: For each component indicated and for each exposed finish required, prepared on Samples of size indicated below.
1. Acoustical Tile: Set of full-size Samples of each type, color, pattern, and texture.
2. Concealed and Exposed Suspension-System Members: 6-inch- long Sample of each type.
3. Exposed Moldings and Trim: Set of 6-inch- long Samples of each type and color.
4. Custom Perimeter Trim: 6-inch-long sample of type and color.

1.5 INFORMATIONAL SUBMITTALS

A. Coordination Drawings: Reflected ceiling plans, drawn to scale, on which the following items are shown and coordinated with each other, using input from installers of the items involved:
1. Ceiling suspension-system members.
2. Method of attaching hangers to building structure.
3. Size and location of initial access modules for acoustical tile.
4. Ceiling-mounted items including lighting fixtures, diffusers, grilles, speakers, sprinklers, access panels, and special moldings.

5. Minimum Drawing Scale: 1/8 inch = 1 foot.

B. Qualification Data: For testing agency.

C. Product Test Reports: For each acoustical tile ceiling, for tests performed by manufacturer and witnessed by a qualified testing agency.

D. Field quality-control reports.

1.6 CLOSEOUT SUBMITTALS

A. Maintenance Data: For finishes to include in maintenance manuals.

1.7 QUALITY ASSURANCE

A. Mockups: Build mockups to verify selections made under sample submittals and to demonstrate aesthetic effects and set quality standards for materials and execution.
1. Build mockup of typical ceiling area as shown on Drawings.
2. Subject to compliance with requirements, approved mockups may become part of the completed Work if undisturbed at time of Substantial Completion.

1.8 DELIVERY, STORAGE, AND HANDLING

A. Deliver acoustical tiles, suspension-system components, and accessories to Project site in original, unopened packages and store them in a fully enclosed, conditioned space where they will be protected against damage from moisture, humidity, temperature extremes, direct sunlight, surface contamination, and other causes.

B. Before installing acoustical tiles, permit them to reach room temperature and a stabilized moisture content.

C. Handle acoustical tiles carefully to avoid chipping edges or damaging units in any way.

1.9 FIELD CONDITIONS

A. Environmental Limitations: Do not install acoustical tile ceilings until spaces are enclosed and weatherproof, wet work in spaces is complete and dry, work above ceilings is complete, and ambient temperature and humidity conditions are maintained at the levels indicated for Project when occupied for its intended use.

PART 2 - PRODUCTS

2.1 PERFORMANCE REQUIREMENTS

A. Surface-Burning Characteristics: Comply with ASTM E 84; testing by a qualified testing agency. Identify products with appropriate markings of applicable testing agency.

1. Flame-Spread Index: Comply with ASTM E 1264 for Class A materials.
2. Smoke-Developed Index: 50 or less.

2.2 ACOUSTICAL TILES, GENERAL

A. Low-Emitting Materials: Acoustical tile ceilings shall comply with the testing and product requirements of the California Department of Health Services' "Standard Practice for the Testing of Volatile Organic Emissions from Various Sources Using Small-Scale Environmental Chambers."

B. Source Limitations:
1. Acoustical Ceiling Tile: Obtain each type from single source from single manufacturer.
2. Suspension System: Obtain each type from single source from single manufacturer.

C. Source Limitations: Obtain each type of acoustical ceiling tile and supporting suspension system from single source from single manufacturer.

D. Acoustical Tile Standard: Provide manufacturer's standard tiles of configuration indicated that comply with ASTM E 1264 classifications as designated by types, patterns, acoustical ratings, and light reflectances unless otherwise indicated.
1. Mounting Method for Measuring NRC: Type E-400; plenum mounting in which face of test specimen is 15-3/4 inches away from test surface according to ASTM E 795.

E. Acoustical Tile Colors and Patterns: Match appearance characteristics indicated for each product type.
1. Where appearance characteristics of acoustical tiles are indicated by referencing pattern designations in ASTM E 1264 and not manufacturers' proprietary product designations, provide products selected by Architect from each manufacturer's full range that comply with requirements indicated for type, pattern, color, light reflectance, acoustical performance, edge detail, and size.

2.3 ACOUSTICAL TILES

A. Basis-of-Design Product Type ACT-1: Subject to compliance with requirements, provide Armstrong Ultima Teguar 2 x 2 x ¾”, Item No. 1902 or comparable product by one of the following:
1. CertainTeed Corp.
2. USG Interiors, Inc.; Subsidiary of USG Corporation.

B. Classification: Provide fire-resistance-rated tiles complying with ASTM E 1264 for type, form, and pattern as follows:
1. Type IV, Form 2.
2. Pattern: E (lightly textured).

C. Color: White.

D. LR: Not less than 0.90.

E. NRC: Not less than 0.70.

F. CAC: Not less than 35.

G. Edge/Joint Detail: Beveled Tegular.

H. Thickness: 3/4 inch.

I. Modular Size: 24 by 24 inches.

J. Basis-of-Design Product Type ACT-2: Subject to compliance with requirements, provide Armstrong Ultima Teguar, 2 x 4 x ¾" Item No. 1906 or comparable product by one of the following.
   1. CertainTeed Corp.
   2. USG Interiors, Inc.; Subsidiary of USG Corporation.

K. Classification: Provide tiles complying with ASTM E 1264 for type, form, and pattern as follows:
   1. 1. Type IV, Form 2.
   2. 2. Pattern: E (lightly textured).

L. Color: White.

M. LR: Not less than 0.90.

N. NRC: Not less than 0.70.

O. CAC: Not less than 40.

P. Edge/Joint Detail: Beveled Tegular.

Q. Thickness: 3/4 inch.

R. Modular Size: 24 by 48 inches.

S. Basis-of-Design Product Type ACT-3: Subject to compliance with requirements, provide Armstrong Clean Room VL Unperforated VL, Square Lay-In, 2 x 4 x 5/8", Item No. 870 or comparable product by one of the following:
   1. CertainTeed Corp.
   2. USG Interiors, Inc.; Subsidiary of USG Corporation.

T. Classification: Provide tiles complying with ASTM E 1264 for type, form, and pattern as follows:
   1. 1. Type IV, Form 2.
   2. 2. Pattern: E (lightly textured.

U. Color: White.

V. LR: Not less than 0.80.

W. NRC: N/A.

X. CAC: Not less than 40.

Y. Edge/Joint Detail: Square lay-in.

Z. Thickness: 5/8 inch.

AA. Modular Size: 24 by 48 inches.

2.4 METAL SUSPENSION SYSTEMS, GENERAL

A. Metal Suspension-System Standard: Provide manufacturer's standard metal suspension systems of types, structural classifications, and finishes indicated that comply with applicable requirements in ASTM C 635/C 635M.

B. Attachment Devices: Size for five times the design load indicated in ASTM C 635/C 635M, Table 1, "Direct Hung," unless otherwise indicated.

C. Wire Hangers, Braces, and Ties: Provide wires complying with the following requirements:
   1. Zinc-Coated, Carbon-Steel Wire: ASTM A 641/A 641M, Class 1 zinc coating, soft temper.
   2. Size: Select wire diameter so its stress at three times hanger design load (ASTM C 635/C 635M, Table 1, "Direct Hung") will be less than yield stress of wire, but provide not less than 0.106-inch-diameter wire.

D. Hanger Rods: Mild steel, zinc coated or protected with rust-inhibitive paint.

E. Angle Hangers: Angles with legs not less than 7/8 inch wide; formed with 0.04-inch- thick, galvanized-steel sheet complying with ASTM A 653/A 653M, G90 coating designation; with bolted connections and 5/16-inch- diameter bolts.

2.5 METAL SUSPENSION SYSTEMS

A. Basis-of-Design Product: Type MSS-1 - Subject to compliance with requirements, provide Armstrong 2x2 Suprafine ML 9/16 inch exposed tee suspension system or comparable product by one of the following:
   1. CertainTeed Corp.
   2. USG Interiors, Inc.; Subsidiary of USG Corporation.

B. Basis-of-Design Product: Type MSS-2 - Subject to compliance with requirements, provide Armstrong 2x2 Suprafine ML 9/16 inch exposed tee suspension system or comparable product by one of the following:
   1. CertainTeed Corp.
   2. USG Interiors, Inc.; Subsidiary of USG Corporation.

C. Basis-of-Design Product: Type MSS-3 - Subject to compliance with requirements, provide Armstrong 2x2 Suprafine ML 9/16 inch exposed tee suspension system or comparable product by one of the following:
   1. CertainTeed Corp.
   2. USG Interiors, Inc.; Subsidiary of USG Corporation.

D. Direct-Hung, Double-Web, Suspension System: Main and cross runners roll formed from and capped with cold-rolled steel sheet, prepainted, electrolytically zinc coated, or hot-dip galvanized according to ASTM A 653/A 653M, G30 coating designation.
   1. Structural Classification: Intermediate duty system.
   2. Access: Upward and end pivoted or side pivoted, with initial access openings of size indicated below and located throughout ceiling within each module formed by main and cross runners, with additional access available by progressively removing remaining acoustical tiles.
      a. Initial Access Opening: In each module, As indicated on Drawings.

E. Basis-of-Design Product: Custom Perimeter Trim - Subject to compliance with requirements, provide Armstrong Axiom-Knife edge custom perimeter trim or comparable product by one of the following:
   1. CertainTeed Corp.
   2. USG Interiors, Inc.; Subsidiary of USG Corporation.

F. Components: Edge trim system with six inch wide horizontal face for suspended ceiling system, extruded aluminum alloy 6063 trim channel, extruded aluminum, factory-finished in (factory-applied baked polyester paint finish color-matched to approved sample). 10 foot straight sections; plus factory-welded and finished seamless corners with 12 inch legs. Attachment to grid system is provided by the specially designed Axiom tee-bar connection clips (AXTBC) (AX-V-TBC) or hanging clips (AX2HGC), which lock into the Axiom Knife-Edge trim channel and are screw-attached to the web of the intersecting Armstrong suspension system members. Sections of trim are joined at the vertical face using the Axiom splice plate (AX3SPLICE).

2.6 METAL EDGE MOLDINGS AND TRIM

A. Basis-of-Design Product: Subject to compliance with requirements, provide or comparable product by one of the following:
   1. CertainTeed Corp.

B. Roll-Formed, Sheet-Metal Edge Moldings and Trim: Type and profile indicated or, if not indicated, manufacturer's standard moldings for edges and penetrations complying with design requirements; formed from sheet metal of same material, finish, and color as that used for exposed flanges of suspension-system runners.
   1. Provide manufacturer's standard edge moldings that fit acoustical tile edge details and suspension systems indicated and that match width and configuration of exposed runners unless otherwise indicated.
   2. For circular penetrations of ceiling, provide edge moldings fabricated to diameter required to fit penetration exactly.

2.7 ACOUSTICAL SEALANT

A. Products: Subject to compliance with requirements, provide one of the following:
   1. Acoustical Sealant for Exposed and Concealed Joints:
      a. Pecora Corporation; AC-20 FTR Acoustical and Insulation Sealant.
      b. USG Corporation; SHEETROCK Acoustical Sealant.

B. Acoustical Sealant: Manufacturer's standard sealant complying with ASTM C 834 and effective in reducing airborne sound transmission through perimeter joints and openings in building construction as demonstrated by testing representative assemblies according to ASTM E 90.
   1. Exposed and Concealed Joints: Nonsag, paintable, nonstaining latex sealant.
   2. Concealed Joints: Nondrying, nonhardening, nonskinning, nonstaining, gunnable, synthetic-rubber sealant.

PART 3 - EXECUTION

3.1 EXAMINATION

A. Examine substrates, areas, and conditions, including structural framing and substrates to which acoustical tile ceilings attach or abut, with Installer present, for compliance with requirements specified in this and other Sections that affect ceiling installation and anchorage and for compliance with requirements for installation tolerances and other conditions affecting performance of the Work.

B. Examine acoustical tiles before installation. Reject acoustical tiles that are wet, moisture damaged, or mold damaged.

C. Proceed with installation only after unsatisfactory conditions have been corrected.

3.2 PREPARATION

A. Measure each ceiling area and establish layout of acoustical tiles to balance border widths at opposite edges of each ceiling. Avoid using less-than-half-width tiles at borders, and comply with layout shown on reflected ceiling plans.

3.3 INSTALLATION OF SUSPENDED ACOUSTICAL TILE CEILINGS

A. General: Install acoustical panel ceilings to comply with ASTM C 636/C 636M and according to manufacturer's written instructions and CISCA's "Ceiling Systems Handbook."

B. Suspend ceiling hangers from building's structural members and as follows:
   1. Install hangers plumb and free from contact with insulation or other objects within ceiling plenum that are not part of supporting structure or of ceiling suspension system.
   2. Splay hangers only where required to miss obstructions; offset resulting horizontal forces by bracing, countersplaying, or other equally effective means.

3. Where width of ducts and other construction within ceiling plenum produces hanger spacings that interfere with location of hangers at spacings required to support standard suspension-system members, install supplemental suspension members and hangers in form of trapezes or equivalent devices.
4. Secure wire hangers to ceiling suspension members and to supports above with a minimum of three tight turns. Connect hangers directly either to structures or other devices that are secure and appropriate for substrate and that will not deteriorate or otherwise fail due to age, corrosion, or elevated temperatures.
5. Secure flat, angle, channel, and rod hangers to structure, including intermediate framing members, by attaching eye screws, or other devices that are secure and appropriate for both the structure to which hangers are attached and the type of hanger involved. Install hangers in a manner that will not cause them to deteriorate or fail due to age, corrosion, or elevated temperatures.
6. When steel framing does not permit installation of hanger wires at spacing required, install carrying channels or other supplemental support for attachment of hanger wires.
7. Do not attach hangers to steel deck tabs.
8. Do not attach hangers to steel roof deck. Attach hangers to structural members.
9. Space hangers not more than 48 inches o.c. along each member supported directly from hangers unless otherwise indicated; provide hangers not more than 8 inches from ends of each member.
10. Size supplemental suspension members and hangers to support ceiling loads within performance limits established by referenced standards and publications.

C. Secure bracing wires to ceiling suspension members and to supports with a minimum of four tight turns. Suspend bracing from building's structural members as required for hangers without attaching to permanent metal forms, steel deck, or steel deck tabs.

D. Install edge moldings and trim of type indicated at perimeter of acoustical tile ceiling area and where necessary to conceal edges of acoustical tiles.
1. Apply acoustical sealant in a continuous ribbon concealed on back of vertical legs of moldings before they are installed.
2. Screw attach moldings to substrate at intervals not more than 16 inches o.c. and not more than 3 inches from ends, leveling with ceiling suspension system to a tolerance of 1/8 inch in 12 feet. Miter corners accurately and connect securely.
3. Do not use exposed fasteners, including pop rivets, on moldings and trim.

E. Install suspension-system runners so they are square and securely interlocked with one another. Remove and replace dented, bent, or kinked members.

F. Install acoustical tiles in coordination with suspension system and exposed moldings and trim. Place splines or suspension-system flanges into kerfed edges so tile-to-tile joints are closed by double lap of material.
1. Fit adjoining tile to form flush, tight joints. Scribe and cut tile for accurate fit at borders and around penetrations through tile.
2. Hold tile field in compression by inserting leaf-type, spring-steel spacers between tile and moldings, spaced 12 inches o.c.

3.4 CLEANING

A. Clean exposed surfaces of acoustical tile ceilings, including trim and edge moldings. Comply with manufacturer's written instructions for cleaning and touchup of minor finish damage. Remove and replace tiles and other ceiling components that cannot be successfully cleaned and repaired to permanently eliminate evidence of damage.

END OF SECTION 095123

SECTION 096513 - RESILIENT BASE AND ACCESSORIES

PART 1 - GENERAL

1.1 SUMMARY

A. Section Includes:
   1. Resilient base.
   2. Resilient molding accessories.

1.2 ACTION SUBMITTALS

A. Product Data: For each type of product.

B. Samples: For each exposed product and for each color and texture specified, not less than 12 inches long.

PART 2 - PRODUCTS

2.1 THERMOSET-RUBBER BASE

A. Manufacturers: Subject to compliance with requirements, available manufacturers offering products that may be incorporated into the Work include, but are not limited to, the following:
   1. Burke Mercer Flooring Products, Division of Burke Industries Inc.
   2. Flexco.
   3. Roppe Corporation, USA.

B. Product Standard: ASTM F 1861, Type TS (rubber, vulcanized thermoset), Group I (solid, homogeneous).
   1. Style and Location:
      a. Style A, Straight: Provide in areas with carpet.
      b. Style B, Cove: Provide in areas with resilient flooring.

C. Thickness: 0.125 inch.

D. Height: 4 inches.

E. Lengths: Cut lengths 48 inches long or Coils in manufacturer's standard length.

F. Outside Corners: Job formed or preformed.

G. Inside Corners: Job formed or preformed.

H. Colors: As selected by Architect from full range of industry colors.

2.2 RESILIENT ACCESSORY

A. Manufacturers" Provide products from one of the following manufacturers:
   1. Armstrong World Industries, Inc.
   2. Johnsonite.
   3. Roppe Corporation.

B. Edge Reducer (Transition) Strips: Vinyl types of width required thickness to protect exposed edge of resilient flooring. Color as selected by Architect from manufacturer's standard color. Provide units of maximum available length, to minimize number of joints.

2.3 INSTALLATION MATERIALS

A. Trowelable Leveling and Patching Compounds: Latex-modified, Portland cement based or blended hydraulic-cement-based formulation provided or approved by resilient-product manufacturer for applications indicated.

B. Adhesives: Water-resistant type recommended by resilient-product manufacturer for resilient products and substrate conditions indicated.

PART 3 - EXECUTION

3.1 PREPARATION

A. Prepare substrates according to manufacturer's written instructions to ensure adhesion of resilient products.

3.2 RESILIENT BASE INSTALLATION

A. Comply with manufacturer's written instructions for installing resilient base.

B. Apply resilient base to walls, columns, pilasters, casework and cabinets in toe spaces, and other permanent fixtures in rooms and areas where base is required.

C. Install resilient base in lengths as long as practical without gaps at seams and with tops of adjacent pieces aligned.

D. Tightly adhere resilient base to substrate throughout length of each piece, with base in continuous contact with horizontal and vertical substrates.

E. Do not stretch resilient base during installation.

F. On masonry surfaces or other similar irregular substrates, fill voids along top edge of resilient base with manufacturer's recommended adhesive filler material.

G. Preformed Corners: Install preformed corners before installing straight pieces.

H. Job-Formed Corners:
   1. Outside Corners: Use straight pieces of maximum lengths possible and form with returns not less than 3 inches in length.
   2. Inside Corners: Use straight pieces of maximum lengths possible and form with returns not less than 3 inches in length.

3.3 RESILIENT ACCESSORY INSTALLATION

A. Comply with manufacturer's written instructions for installing resilient accessories.

B. Resilient Molding Accessories: Butt to adjacent materials and tightly adhere to substrates throughout length of each piece. Install reducer strips at edges of floor covering that would otherwise be exposed.

3.4 CLEANING AND PROTECTION

A. Comply with manufacturer's written instructions for cleaning and protecting resilient products.

B. Cover resilient products subject to wear and foot traffic until Substantial Completion.

END OF SECTION 096513

SECTION 09 65 19 - RESILIENT TILE FLOORING

PART 1 - GENERAL

1.1 SUMMARY

A. Section Includes:
   1. Solid vinyl floor tile.

1.2 ACTION SUBMITTALS

A. Product Data: For each type of product.

B. Shop Drawings: For each type of floor tile. Include floor tile layouts, edges, columns, doorways, enclosing partitions, built-in furniture, cabinets, and cutouts.
   1. Show details of special patterns.

C. Samples: Full-size units of each color and pattern of floor tile required.

1.3 CLOSEOUT SUBMITTALS

A. Maintenance data.

PART 2 - PRODUCTS

2.1 PERFORMANCE REQUIREMENTS

A. Fire-Test-Response Characteristics: For resilient tile flooring, as determined by testing identical products according to ASTM E 648 or NFPA 253 by a qualified testing agency.
   1. Critical Radiant Flux Classification: Class I, not less than 0.45 W/sq. cm.

2.2 SOLID VINYL FLOOR TILE WITH FUR COATING, VT-1

A. Basis of Design: Ecore Commercial Floor, Expona Commercial Collection 5067 light grey concrete or Architects approved equal.

B. Tile Standard: Comply with ASTM F1066, ASTM E648 and ASTM E662.
   1. Class: As indicated by product designations.
   2. Type: A, smooth surface.

C. Thickness: 2.5 mm.

D. Size: 24 by 24 inches.

E. Colors and Patterns: As indicated by manufacturer's designations.

2.3 INSTALLATION MATERIALS

A. Trowelable Leveling and Patching Compounds: Latex-modified, Portland cement based or blended hydraulic-cement-based formulation provided or approved by floor tile manufacturer for applications indicated.

B. Adhesives: Water-resistant type recommended by floor tile and adhesive manufacturers to suit floor tile and substrate conditions indicated.

C. Floor Polish: Provide protective, liquid floor-polish products recommended by floor tile manufacturer.

PART 3 - EXECUTION

3.1 PREPARATION

A. Prepare substrates according to floor tile manufacturer’s written instructions to ensure adhesion of resilient products.

B. Concrete Substrates: Prepare according to ASTM F 710.
   1. Verify that substrates are dry and free of curing compounds, sealers, and hardeners.
   2. Remove substrate coatings and other substances that are incompatible with adhesives and that contain soap, wax, oil, or silicone, using mechanical methods recommended by floor tile manufacturer. Do not use solvents.
   3. Alkalinity and Adhesion Testing: Perform tests recommended by floor tile manufacturer. Proceed with installation only after substrate alkalinity falls within range on pH scale recommended by manufacturer in writing, but not less than 5 or more than 9 pH.
   4. Moisture Testing: Proceed with installation only after substrates pass testing according to floor tile manufacturer's written recommendations, but not less stringent than the following:
      a. Perform anhydrous calcium chloride test according to ASTM F 1869. Proceed with installation only after substrates have maximum moisture-vapor-emission rate of 3 lb of water/1000 sq. ft. in 24 hours.
      b. Perform relative humidity test using in situ probes according to ASTM F 2170. Proceed with installation only after substrates have a maximum 75 percent relative humidity level.

C. Fill cracks, holes, and depressions in substrates with trowelable leveling and patching compound; remove bumps and ridges to produce a uniform and smooth substrate.

D. Do not install floor tiles until they are the same temperature as the space where they are to be installed.

E. Immediately before installation, sweep and vacuum clean substrates to be covered by resilient floor tile.

3.2 FLOOR TILE INSTALLATION

A. Comply with manufacturer's written instructions for installing floor tile.

B. Lay out floor tiles from center marks established with principal walls, discounting minor offsets, so tiles at opposite edges of room are of equal width. Adjust as necessary to avoid using cut widths that equal less than one-half tile at perimeter.
   1. Lay tiles square with room axis in pattern indicated.

C. Match floor tiles for color and pattern by selecting tiles from cartons in the same sequence as manufactured and packaged, if so numbered. Discard broken, cracked, chipped, or deformed tiles.
   1. Lay tiles with grain running in one direction in pattern of colors and sizes indicated.

D. Scribe, cut, and fit floor tiles to butt neatly and tightly to vertical surfaces and permanent fixtures including built-in furniture, cabinets, pipes, outlets, and door frames.

E. Extend floor tiles into toe spaces, door reveals, closets, and similar openings. Extend floor tiles to center of door openings.

F. Maintain reference markers, holes, and openings that are in place or marked for future cutting by repeating on floor tiles as marked on substrates. Use chalk or other nonpermanent marking device.

G. Install floor tiles on covers for telephone and electrical ducts, building expansion-joint covers, and similar items in finished floor areas. Maintain overall continuity of color and pattern between pieces of tile installed on covers and adjoining tiles. Tightly adhere tile edges to substrates that abut covers and to cover perimeters.

H. Adhere floor tiles to flooring substrates using a full spread of adhesive applied to substrate to produce a completed installation without open cracks, voids, raising and puckering at joints, telegraphing of adhesive spreader marks, and other surface imperfections.

3.3 CLEANING AND PROTECTION

A. Comply with manufacturer's written instructions for cleaning and protecting floor tile.

B. Cover floor tile until Substantial Completion.

END OF SECTION 096519

SECTION 09 68 13 - TILE CARPETING

PART 1 - GENERAL

1.1 SUMMARY

A. Section includes modular carpet tile.

1.2 PREINSTALLATION MEETINGS

A. Preinstallation Conference: Conduct conference at Project site.

1.3 ACTION SUBMITTALS

A. Product Data: For each type of product.

B. Shop Drawings: For carpet tile installation, plans showing the following:
1. Columns, doorways, enclosing walls or partitions, built-in cabinets, and locations where cutouts are required in carpet tiles.
2. Carpet tile type, color, and dye lot.
3. Type of subfloor.
4. Type of installation.
5. Pattern of installation.
6. Pattern type, location, and direction.
7. Pile direction.
8. Type, color, and location of insets and borders.
9. Type, color, and location of edge, transition, and other accessory strips.
10. Transition details to other flooring materials.

C. Samples: For each exposed product and for each color and texture required.

1.4 INFORMATIONAL SUBMITTALS

A. Product test reports.

B. Sample warranty.

1.5 CLOSEOUT SUBMITTALS

A. Maintenance data.

1.6 QUALITY ASSURANCE

A. Installer Qualifications: Certified by the International Certified Floorcovering Installers Association at the Commercial II certification level.

1.7 WARRANTY

A. Special Warranty for Carpet Tiles: Manufacturer agrees to repair or replace components of carpet tile installation that fail in materials or workmanship within specified warranty period.
   1. Warranty Period: 10 years from date of Substantial Completion.

PART 2 - PRODUCTS

2.1 CARPET TILE CT-1

A. Basis of Design: Milliken Fahrenheit, Wave, Color WAVC2-71-5 Tundra or Architects approved equal.

B. Color: WAVc2-71-5 Tundra.

C. Design Name: Fahrenheit, Wave.

D. Tile Size: 39.47 inches x 39.47 inch.

E. Yarn Type: Millken-Certified Wearon Nylon, Type 6, 6.

F. Pile Characteristic: Tufted, Textured Loop.

G. Tufted Face Weight: 15 oz per square yard.

H. Dye Method: DCP (Digital Color Placement).

I. Average Density (Finished): 0.08.

J. Finish Pile Height: 0.08 inches for finished carpet tile according to ASTM D 6859.

K. Stitches: 9.8

L. Gage: 1/12.

M. Nominal Total Thickness: 0.29 inches.

N. Nominal Total Weight: 89 oz. per square yard.

O. Standard Backing: PVC-Free underscore ES cushion with traction back.

P. Applied Treatments:
   1. Soil-Resistance Treatment: Manufacturer's standard treatment.
   2. Antimicrobial Treatment: Manufacturer's standard treatment that protects carpet tiles as follows:
      a. Antimicrobial Activity: Not less than 2-mm halo of inhibition for gram-positive bacteria, not less than 1-mm halo of inhibition for gram-negative bacteria, and no fungal growth, according to AATCC 174.

2.2 INSTALLATION ACCESSORIES

A. Trowelable Leveling and Patching Compounds: Latex-modified, hydraulic-cement-based formulation provided or recommended by carpet tile manufacturer.

B. Adhesives: Water-resistant, mildew-resistant, nonstaining, pressure-sensitive type to suit products and subfloor conditions indicated, that comply with flammability requirements for installed carpet tile, and are recommended by carpet tile manufacturer for releasable installation.

PART 3 - EXECUTION

3.1 EXAMINATION

A. Concrete Slabs:
   1. Moisture Testing: Perform tests so that each test area does not exceed 1000 sq. ft., and perform no fewer than three tests in each installation area and with test areas evenly spaced in installation areas.
      a. Anhydrous Calcium Chloride Test: ASTM F 1869. Proceed with installation only after substrates have maximum moisture-vapor-emission rate of 3 lb of water/1000 sq. ft. in 24 hours.
      b. Relative Humidity Test: Using in situ probes, ASTM F 2170. Proceed with installation only after substrates have a maximum 75 percent relative humidity level measurement.
      c. Perform additional moisture tests recommended in writing by adhesive and carpet tile manufacturers. Proceed with installation only after substrates pass testing.

3.2 PREPARATION

A. General: Comply with CRI's "CRI Carpet Installation Standards" and with carpet tile manufacturer's written installation instructions for preparing substrates indicated to receive carpet tile.

B. Use trowelable leveling and patching compounds, according to manufacturer's written instructions, to fill cracks, holes, depressions, and protrusions in substrates. Fill or level cracks, holes and depressions 1/8 inch (3 mm) wide or wider, and protrusions more than 1/32 inch (0.8 mm) unless more stringent requirements are required by manufacturer's written instructions.

C. Concrete Substrates: Remove coatings, including curing compounds, and other substances that are incompatible with adhesives and that contain soap, wax, oil, or silicone, without using solvents. Use mechanical methods recommended in writing by adhesive and carpet tile manufacturers.

D. Broom and vacuum clean substrates to be covered immediately before installing carpet tile.

3.3 INSTALLATION

A. General: Comply with CRI's "CRI Carpet Installation Standard," Section 18, "Modular Carpet" and with carpet tile manufacturer's written installation instructions.

B. Installation Method: Glue down; install every tile with full-spread, releasable, pressure-sensitive adhesive.

C. Maintain dye-lot integrity. Do not mix dye lots in same area.

D. Maintain pile-direction patterns indicated on Drawings.

E. Cut and fit carpet tile to butt tightly to vertical surfaces, permanent fixtures, and built-in furniture including cabinets, pipes, outlets, edgings, thresholds, and nosings. Bind or seal cut edges as recommended by carpet tile manufacturer.

F. Extend carpet tile into toe spaces, door reveals, closets, open-bottomed obstructions, removable flanges, alcoves, and similar openings.

G. Maintain reference markers, holes, and openings that are in place or marked for future cutting by repeating on carpet tile as marked on subfloor. Use nonpermanent, nonstaining marking device.

H. Install pattern parallel to walls and borders.

I. Protect carpet tile against damage from construction operations and placement of equipment and fixtures during the remainder of construction period. Use protection methods indicated or recommended in writing by carpet tile manufacturer.

END OF SECTION 096813

SECTION 09 84 39 – ACOUSTICAL CEILING CLOUDS

PART 1 - GENERAL

1.1 SUMMARY

A. Section Includes:
   1. Acoustical clouds.
   2. Attachment hangers and fasteners

1.2 SUBMITTALS

A. Product Data: Submit manufacturer's technical data for each type of cloud system required.

B. Installation Instruction: Submit manufacturer's installation instructions.

C. Shop Drawings: Layout and details of acoustical clouds. Show locations of items which are to be coordinated with acoustical clouds.

1.3 QUALITY ASSURANCE

A. Single-Source Responsibility: Provide acoustical clouds and method of attachment by a single manufacturer.

B. Coordination of Work: Coordinate acoustical cloud work with installers of related work including, but not limited to suspended ceilings, building insulation, gypsum board, light fixtures, mechanical systems, electrical systems, and sprinklers.

C. Acoustical clouds, as with other architectural features located in the ceiling plane, may obstruct or skew the existing or planned fire sprinkler water distribution pattern, or possibly delay the activation of the fire sprinkler or fire detection system. Designers and installers are advised to consult a fire protection engineer, NFPA 13, and their local codes for guidance on the proper installation techniques where fire detection or suppression systems are present.

1.4 DELIVERY, STORAGE AND HANDLING

A. Deliver acoustical clouds to project site in original, unopened packages and store them in a fully enclosed space between 40°F and 120°F where they will be protected against damage from moisture, direct sunlight, surface contamination, and other causes. All wet work (plastering, concrete, etc) must be complete and dry.

B. Before installing acoustical clouds, permit them to reach room temperature and a stabilized moisture content.

C. Handle acoustical clouds carefully to avoid damaging the surface and edges in any way.

1.5 PROJECT CONDITIONS

A. Space Enclosures

Building areas to receive acoustical clouds shall be free of construction dust and debris. Products can be installed in temperatures between 40°F and 120°F. Cannot be used in exterior applications, where standing water is present, or where moisture will come in direct contact with the acoustical cloud.

1.6 WARRANTY

A. Acoustical Clouds: Submit a written warranty executed by the manufacturer, agreeing to repair or replace acoustical clouds that fail within the warranty period. Failures include, but are not limited to:
   1. Acoustical Clouds: Manufacturing defects.
   2. Attachment Devices: Rusting and manufacturing defects.

B. Warranty Period:
   1. Acoustical Clouds: One (1) year from date of substantial completion.
   2. Attachment Devices: One (1) year from date of substantial completion.

C. The Warranty shall not deprive the Owner of other rights the Owner may have under other provisions of the Contract Documents and will be in addition to and run concurrent with other warranties made by the Contractor under the requirements of the Contract Documents.

PART 2 - PRODUCTS

2.1 MANUFACTURERS

A. Basis of Design Armstrong Acoustical Cloud Item #5444 Hexagon or Architect’s approved equal.

2.2 ACOUSTICAL CLOUD UNITS

A. Acoustical Cloud:
   1. Surface Texture: Smooth.
   2. Composition: Fiberglass.
   3. Surface Finish: DuraBrite acoustically transparent membrane on front and edges.
   4. Color: White
   5. Shapes: Standard
      a. Nominal 4 foot x 4 foot shapes
         1. Hexagon, Item #5444.
   6. Thickness: 7/8 inch.
   7. Edge Detail: Square Edge
   8. Flame Spread: (ASTM E 84), Class A.
   9. Light Reflectance: (LR): (ASTM E 1477), White: 0.90

10. Acoustical Absorption: (ASTM C423), White: Minimum 1.17 Sabins/sf, Colors: Minimum 1.00 Sabins/sf.
11. Antimicrobial Protection: Inherent – Resists the growth of mold/mildew and bacterial growth.

2.3 ATTACHMENT SYSTEMS

A. Installation Hardware Kits for individual suspension and group suspension:
1. 5450 Deck Hanging Kit
2. 5451 Grouping Frames
3. 5452 Frame Splice.
4. 5453 Frame Alignment.
5. 5454 Panel Hook Kit.
6. 5455 Drywall Hanging.
7. 625530 Extended Hanging Cables.
8. 7006 Escutheon Kit.
9. 5438 Angled Deck Hanging Kit.
10. 5588 Wall Hanging.
11. 5632 Grid Hook Kit
12. Multi-Plane Hanging Kit:
    a. 5629 – 1” Drop Hook Kit
    b. 5630 – 2” Drop Hook Kit.
    c. 5631 – 3” Drop Hook Kit.

PART 3 - EXECUTION

3.1 PREPARATION

A. Measure each ceiling area and establish layout of acoustical clouds and installation hardware. Comply with reflected ceiling plans. Coordinate panel layout with mechanical, electrical and sprinkler fixtures.

3.2 INSTALLATION

A. Install panels in accordance with the manufacturer’s instructions, LA-297302, and in compliance with the authorities having jurisdiction.

3.3 ADJUSTING AND CLEANING

A. Replace damaged and broken panels.

B. Clean exposed surfaces of acoustical clouds per manufacturer’s instructions.

END OF SECTION 098439

SECTION 09 91 13 - EXTERIOR PAINTING

PART 1 - GENERAL

1.1 SUMMARY

A. Section includes surface preparation and the application of paint systems on the following exterior substrates:
   1. Steel.
   2. Galvanized metal.

1.2 DEFINITIONS

A. Gloss Level 1: Not more than 5 units at 60 degrees and 10 units at 85 degrees, according to ASTM D 523.

B. Gloss Level 3: 10 to 25 units at 60 degrees and 10 to 35 units at 85 degrees, according to ASTM D 523.

C. Gloss Level 4: 20 to 35 units at 60 degrees and not less than 35 units at 85 degrees, according to ASTM D 523.

D. Gloss Level 5: 35 to 70 units at 60 degrees, according to ASTM D 523.

E. Gloss Level 6: 70 to 85 units at 60 degrees, according to ASTM D 523.

F. Gloss Level 7: More than 85 units at 60 degrees, according to ASTM D 523.

1.3 ACTION SUBMITTALS

A. Product Data: For each type of product. Include preparation requirements and application instructions.

B. Samples for Initial Selection: For each type of topcoat product.

C. Samples for Verification: For each type of paint system and each color and gloss of topcoat.
   1. Submit Samples on rigid backing, 8 inches square.
   2. Step coats on Samples to show each coat required for system.
   3. Label each coat of each Sample.
   4. Label each Sample for location and application area.

D. Product List: For each product indicated, include the following:
   1. Cross-reference to paint system and locations of application areas. Use same designations indicated on Drawings and in schedules.
   2. Printout of current "MPI Approved Products List" for each product category specified, with the proposed product highlighted.
   3. VOC content.

1.4 QUALITY ASSURANCE

A. Mockups: Apply mockups of each paint system indicated and each color and finish selected to verify preliminary selections made under Sample submittals and to demonstrate aesthetic effects and set quality standards for materials and execution.
   1. Architect will select one surface to represent surfaces and conditions for application of each paint system specified.
      a. Vertical and Horizontal Surfaces: Provide samples of at least 100 sq. ft..
      b. Other Items: Architect will designate items or areas required.
   2. Final approval of color selections will be based on mockups.
      a. If preliminary color selections are not approved, apply additional mockups of additional colors selected by Architect at no added cost to Owner.
   3. Approval of mockups does not constitute approval of deviations from the Contract Documents contained in mockups unless Architect specifically approves such deviations in writing.
   4. Subject to compliance with requirements, approved mockups may become part of the completed Work if undisturbed at time of Substantial Completion.

1.5 DELIVERY, STORAGE, AND HANDLING

A. Store materials not in use in tightly covered containers in well-ventilated areas with ambient temperatures continuously maintained at not less than 45 deg F.
   1. Maintain containers in clean condition, free of foreign materials and residue.
   2. Remove rags and waste from storage areas daily.

1.6 FIELD CONDITIONS

A. Apply paints only when temperature of surfaces to be painted and ambient air temperatures are between 50 and 95 deg F.

B. Do not apply paints in snow, rain, fog, or mist; when relative humidity exceeds 85 percent; at temperatures less than 5 deg F above the dew point; or to damp or wet surfaces.

PART 2 - PRODUCTS

2.1 MANUFACTURERS

A. Manufacturers: Subject to compliance with requirements, available manufacturers offering products that may be incorporated into the Work include, but are not limited to, the following:
   1. Benjamin Moore & Co.
   2. ICI Paints.
   3. Kelly-Moore Paints.
   4. PPG Architectural Finishes, Inc.
   5. Pratt & Lambert.
   6. Sherwin-Williams Company (The).

2.2 PAINT, GENERAL

A. MPI Standards: Provide products that comply with MPI standards indicated and that are listed in its "MPI Products List."

B. Material Compatibility:
   1. Provide materials for use within each paint system that are compatible with one another and substrates indicated, under conditions of service and application as demonstrated by manufacturer, based on testing and field experience.
   2. For each coat in a paint system, provide products recommended in writing by manufacturers of topcoat for use in paint system and on substrate indicated.

C. Colors: As selected by Architect from manufacturer's full range.

2.3 METAL PRIMERS

A. Primer, Alkyd, Anti-Corrosive for Metal: MPI #79.

2.4 WATER-BASED PAINTS

A. Latex, Exterior Flat (Gloss Level 1): MPI #10.

2.5 SOLVENT-BASED PAINTS

A. Alkyd, Exterior, Semi-Gloss (Gloss Level 5): MPI #94.

B. Alkyd, Exterior Gloss (Gloss Level 6): MPI #9.

PART 3 - EXECUTION

3.1 EXAMINATION

A. Examine substrates and conditions, with Applicator present, for compliance with requirements for maximum moisture content and other conditions affecting performance of the Work.

B. Verify suitability of substrates, including surface conditions and compatibility with existing finishes and primers.

C. Proceed with coating application only after unsatisfactory conditions have been corrected.
   1. Application of coating indicates acceptance of surfaces and conditions.

3.2 PREPARATION

A. Comply with manufacturer's written instructions and recommendations in "MPI Manual" applicable to substrates and paint systems indicated.

B. Remove hardware, covers, plates, and similar items already in place that are removable and are not to be painted. If removal is impractical or impossible because of size or weight of item, provide surface-applied protection before surface preparation and painting.
   1. After completing painting operations, use workers skilled in the trades involved to reinstall items that were removed. Remove surface-applied protection.

C. Clean substrates of substances that could impair bond of paints, including dust, dirt, oil, grease, and incompatible paints and encapsulants.
   1. Remove incompatible primers and reprime substrate with compatible primers or apply tie coat as required to produce paint systems indicated.

D. Steel Substrates: Remove rust, loose mill scale, and shop primer if any. Clean using methods recommended in writing by paint manufacturer but not less than the following:
   1. SSPC-SP 2, "Hand Tool Cleaning."
   2. SSPC-SP 3, "Power Tool Cleaning."
   3. SSPC-SP 7/NACE No. 4, "Brush-off Blast Cleaning."
   4. SSPC-SP 11, "Power Tool Cleaning to Bare Metal."

E. Shop-Primed Steel Substrates: Clean field welds, bolted connections, and abraded areas of shop paint, and paint exposed areas with the same material as used for shop priming to comply with SSPC-PA 1 for touching up shop-primed surfaces.

F. Galvanized-Metal Substrates: Remove grease and oil residue from galvanized sheet metal by mechanical methods to produce clean, lightly etched surfaces that promote adhesion of subsequently applied paints.

3.3 APPLICATION

A. Apply paints according to manufacturer's written instructions and recommendations in "MPI Manual."
   1. Use applicators and techniques suited for paint and substrate indicated.
   2. Paint surfaces behind movable items same as similar exposed surfaces. Before final installation, paint surfaces behind permanently fixed items with prime coat only.
   3. Paint both sides and edges of exterior doors and entire exposed surface of exterior door frames.
   4. Do not paint over labels of independent testing agencies or equipment name, identification, performance rating, or nomenclature plates.
   5. Primers specified in painting schedules may be omitted on items that are factory primed or factory finished if acceptable to topcoat manufacturers.

B. Tint undercoats same color as topcoat, but tint each undercoat a lighter shade to facilitate identification of each coat if multiple coats of same material are to be applied. Provide sufficient difference in shade of undercoats to distinguish each separate coat.

C. If undercoats or other conditions show through topcoat, apply additional coats until cured film has a uniform paint finish, color, and appearance.

D. Apply paints to produce surface films without cloudiness, spotting, holidays, laps, brush marks, roller tracking, runs, sags, ropiness, or other surface imperfections. Cut in sharp lines and color breaks.

3.4 CLEANING AND PROTECTION

A. At end of each workday, remove rubbish, empty cans, rags, and other discarded materials from Project site.

B. After completing paint application, clean spattered surfaces. Remove spattered paints by washing, scraping, or other methods. Do not scratch or damage adjacent finished surfaces.

C. Protect work of other trades against damage from paint application. Correct damage to work of other trades by cleaning, repairing, replacing, and refinishing, as approved by Architect, and leave in an undamaged condition.

D. At completion of construction activities of other trades, touch up and restore damaged or defaced painted surfaces.

3.5 EXTERIOR PAINTING SCHEDULE

A. Steel Substrates:
   1. Alkyd System:
      a. Prime Coat: Primer, alkyd, anticorrosive for metal, MPI #79.
      b. Prime Coat: Shop primer specified in Section where substrate is specified.
      c. Intermediate Coat: Exterior alkyd enamel matching topcoat.
      d. Topcoat: Alkyd, exterior, semi-gloss (Gloss Level 5), MPI #94.
      e. Topcoat: Alkyd, exterior, gloss (Gloss Level 6), MPI #9.

B. Galvanized-Metal Substrates:
   1. Alkyd System:
      a. Prime Coat: Primer, galvanized metal, as recommended in writing by topcoat manufacturer for exterior use on galvanized-metal substrates with topcoat indicated.
      b. Intermediate Coat: Exterior alkyd enamel matching topcoat.
      c. Topcoat: Alkyd, exterior, semi-gloss (Gloss Level 5), MPI #94.
      d. Topcoat: Alkyd, exterior, gloss (Gloss Level 5), MPI #9.

END OF SECTION 099113

SECTION 09 91 23 - INTERIOR PAINTING

PART 1 - GENERAL

1.1 SUMMARY

A. Section includes surface preparation and the application of paint systems on the following interior substrates:
   1. Steel.
   2. Galvanized metal.
   3. Wood.
   4. Gypsum board.

1.2 DEFINITIONS

A. Gloss Level 1: Not more than 5 units at 60 degrees and 10 units at 85 degrees, according to ASTM D 523.

B. Gloss Level 2: Not more than 10 units at 60 degrees and 10 to 35 units at 85 degrees, according to ASTM D 523.

C. Gloss Level 3: 10 to 25 units at 60 degrees and 10 to 35 units at 85 degrees, according to ASTM D 523.

D. Gloss Level 4: 20 to 35 units at 60 degrees and not less than 35 units at 85 degrees, according to ASTM D 523.

E. Gloss Level 5: 35 to 70 units at 60 degrees, according to ASTM D 523.

F. Gloss Level 6: 70 to 85 units at 60 degrees, according to ASTM D 523.

G. Gloss Level 7: More than 85 units at 60 degrees, according to ASTM D 523.

1.3 ACTION SUBMITTALS

A. Product Data: For each type of product. Include preparation requirements and application instructions.

B. Samples for Initial Selection: For each type of topcoat product.

C. Samples for Verification: For each type of paint system and in each color and gloss of topcoat.
   1. Submit Samples on rigid backing, 8 inches square.
   2. Step coats on Samples to show each coat required for system.
   3. Label each coat of each Sample.
   4. Label each Sample for location and application area.

D. Product List: For each product indicated, include the following:
   1. Cross-reference to paint system and locations of application areas. Use same designations indicated on Drawings and in schedules.
   2. Printout of current "MPI Approved Products List" for each product category specified in Part 2, with the proposed product highlighted.
   3. VOC content.

1.4 QUALITY ASSURANCE

A. Mockups: Apply mockups of each paint system indicated and each color and finish selected to verify preliminary selections made under Sample submittals and to demonstrate aesthetic effects and set quality standards for materials and execution.
   1. Architect will select one surface to represent surfaces and conditions for application of each paint system.
      a. Vertical and Horizontal Surfaces: Provide samples of at least 100 sq. ft..
      b. Other Items: Architect will designate items or areas required.
   2. Final approval of color selections will be based on mockups.
      a. If preliminary color selections are not approved, apply additional mockups of additional colors selected by Architect at no added cost to Owner.
   3. Approval of mockups does not constitute approval of deviations from the Contract Documents contained in mockups unless Architect specifically approves such deviations in writing.
   4. Subject to compliance with requirements, approved mockups may become part of the completed Work if undisturbed at time of Substantial Completion.

1.5 DELIVERY, STORAGE, AND HANDLING

A. Store materials not in use in tightly covered containers in well-ventilated areas with ambient temperatures continuously maintained at not less than 45 deg F.
   1. Maintain containers in clean condition, free of foreign materials and residue.
   2. Remove rags and waste from storage areas daily.

1.6 FIELD CONDITIONS

A. Apply paints only when temperature of surfaces to be painted and ambient air temperatures are between 50 and 95 deg F.

B. Do not apply paints when relative humidity exceeds 85 percent; at temperatures less than 5 deg F above the dew point; or to damp or wet surfaces.

PART 2 - PRODUCTS

2.1 MANUFACTURERS

A. Manufacturers: Subject to compliance with requirements available manufacturers offering products that may be incorporated into the Work include, but are not limited to, the following:
   1. Benjamin Moore & Co.
   2. ICI Paints.
   3. Kelly-Moore Paints.
   4. PPG Architectural Finishes, Inc.
   5. Pratt & Lambert.
   6. Sherwin-Williams Company (The).

2.2 PAINT, GENERAL

A. MPI Standards: Provide products that comply with MPI standards indicated and that are listed in its "MPI Products List."

B. Material Compatibility:
   1. Provide materials for use within each paint system that are compatible with one another and substrates indicated, under conditions of service and application as demonstrated by manufacturer, based on testing and field experience.
   2. For each coat in a paint system, provide products recommended in writing by manufacturers of topcoat for use in paint system and on substrate indicated.

C. Colors: As selected by Architect from manufacturer's full range.

2.3 PRIMERS/SEALERS

A. Primer Sealer, Latex, Interior: MPI #50.

B. Primer, Latex, for Interior Wood: MPI #39.

2.4 METAL PRIMERS

A. Primer, Alkyd, Anti-Corrosive, for Metal: MPI #79.

B. Primer, Alkyd, Quick Dry, for Metal: MPI #76.

C. Primer, Galvanized, Water Based: MPI #134.

2.5 WATER-BASED PAINTS

A. Latex, Interior, Semi-Gloss, (Gloss Level 5): MPI #54.

B. Latex, Interior, Gloss, (Gloss Level 6, except minimum gloss of 65 units at 60 degrees): MPI #114.

C. Latex, Interior, Institutional Low Odor/VOC, (Gloss Level 2): MPI #144.

D. Latex, Interior, Institutional Low Odor/VOC, (Gloss Level 3): MPI #145.

E. Latex, Interior, Institutional Low Odor/VOC, Semi-Gloss (Gloss Level 5): MPI #147.

2.6 SOLVENT-BASED PAINTS

A. Alkyd, Interior, Semi-Gloss (Gloss Level 5): MPI #47.

B. Alkyd, Interior, Gloss (Gloss Level 6): MPI #48.

2.7 DRY FOG/FALL COATINGS

A. Dry Fall, Alkyd, Flat: MPI #55.

PART 3 - EXECUTION

3.1 EXAMINATION

A. Examine substrates and conditions, with Applicator present, for compliance with requirements for maximum moisture content and other conditions affecting performance of the Work.

B. Maximum Moisture Content of Substrates: When measured with an electronic moisture meter as follows:
   1. Wood: 15 percent.
   2. Gypsum Board: 12 percent.

C. Gypsum Board Substrates: Verify that finishing compound is sanded smooth.

D. Spray-Textured Substrates: Verify that surfaces are dry.

E. Verify suitability of substrates, including surface conditions and compatibility with existing finishes and primers.

F. Proceed with coating application only after unsatisfactory conditions have been corrected.
   1. Application of coating indicates acceptance of surfaces and conditions.

3.2 PREPARATION

A. Comply with manufacturer's written instructions and recommendations in "MPI Manual" applicable to substrates indicated.

B. Remove hardware, covers, plates, and similar items already in place that are removable and are not to be painted. If removal is impractical or impossible because of size or weight of item, provide surface-applied protection before surface preparation and painting.
   1. After completing painting operations, use workers skilled in the trades involved to reinstall items that were removed. Remove surface-applied protection if any.

C. Clean substrates of substances that could impair bond of paints, including dust, dirt, oil, grease, and incompatible paints and encapsulants.
   1. Remove incompatible primers and reprime substrate with compatible primers or apply tie coat as required to produce paint systems indicated.

D. Steel Substrates: Remove rust, loose mill scale, and shop primer, if any. Clean using methods recommended in writing by paint manufacturer.
   1. SSPC-SP 2, "Hand Tool Cleaning."
   2. SSPC-SP 3, "Power Tool Cleaning."
   3. SSPC-SP 7/NACE No. 4, "Brush-off Blast Cleaning."
   4. SSPC-SP 11, "Power Tool Cleaning to Bare Metal."

E. Shop-Primed Steel Substrates: Clean field welds, bolted connections, and abraded areas of shop paint, and paint exposed areas with the same material as used for shop priming to comply with SSPC-PA 1 for touching up shop-primed surfaces.

F. Galvanized-Metal Substrates: Remove grease and oil residue from galvanized sheet metal fabricated from coil stock by mechanical methods to produce clean, lightly etched surfaces that promote adhesion of subsequently applied paints.

G. Wood Substrates:
   1. Scrape and clean knots, and apply coat of knot sealer before applying primer.
   2. Sand surfaces that will be exposed to view, and dust off.
   3. Prime edges, ends, faces, undersides, and backsides of wood.
   4. After priming, fill holes and imperfections in the finish surfaces with putty or plastic wood filler. Sand smooth when dried.

3.3 APPLICATION

A. Apply paints according to manufacturer's written instructions and to recommendations in "MPI Manual."
   1. Use applicators and techniques suited for paint and substrate indicated.
   2. Paint surfaces behind movable equipment and furniture same as similar exposed surfaces. Before final installation, paint surfaces behind permanently fixed equipment or furniture with prime coat only.
   3. Paint front and backsides of access panels, removable or hinged covers, and similar hinged items to match exposed surfaces.
   4. Do not paint over labels of independent testing agencies or equipment name, identification, performance rating, or nomenclature plates.
   5. Primers specified in painting schedules may be omitted on items that are factory primed or factory finished if acceptable to topcoat manufacturers.

B. Tint each undercoat a lighter shade to facilitate identification of each coat if multiple coats of same material are to be applied. Tint undercoats to match color of topcoat, but provide sufficient difference in shade of undercoats to distinguish each separate coat.

C. If undercoats or other conditions show through topcoat, apply additional coats until cured film has a uniform paint finish, color, and appearance.

D. Apply paints to produce surface films without cloudiness, spotting, holidays, laps, brush marks, roller tracking, runs, sags, ropiness, or other surface imperfections. Cut in sharp lines and color breaks.

E. Painting Fire Suppression, Plumbing, HVAC, Electrical, Communication, and Electronic Safety and Security Work:
   1. Paint the following work where exposed in equipment rooms:
      a. Equipment, including panelboards.
      b. Uninsulated metal piping.
      c. Uninsulated plastic piping.
      d. Pipe hangers and supports.
      e. Metal conduit.
      f. Plastic conduit.
      g. Tanks that do not have factory-applied final finishes.
      h. Duct, equipment, and pipe insulation having insulation covering or other paintable jacket material.
   2. Paint the following work where exposed in occupied spaces:
      a. Equipment, including panelboards.
      b. Uninsulated metal piping.
      c. Uninsulated plastic piping.
      d. Pipe hangers and supports.
      e. Metal conduit.
      f. Plastic conduit.
      g. Duct, equipment, and pipe insulation having insulation covering or other paintable jacket material.
      h. Other items as directed by Architect.
   3. Paint portions of internal surfaces of metal ducts, without liner, behind air inlets and outlets that are visible from occupied spaces.

3.4 CLEANING AND PROTECTION

A. At end of each workday, remove rubbish, empty cans, rags, and other discarded materials from Project site.

B. After completing paint application, clean spattered surfaces. Remove spattered paints by washing, scraping, or other methods. Do not scratch or damage adjacent finished surfaces.

C. Protect work of other trades against damage from paint application. Correct damage to work of other trades by cleaning, repairing, replacing, and refinishing, as approved by Architect, and leave in an undamaged condition.

D. At completion of construction activities of other trades, touch up and restore damaged or defaced painted surfaces.

3.5 INTERIOR PAINTING SCHEDULE

A. Steel Substrates:
   1. Alkyd System:
      a. Prime Coat: Primer, alkyd, anti-corrosive, for metal, MPI #79 or primer, alkyd, quick dry, for metal, MPI #76.
      b. Intermediate Coat: Alkyd, interior, matching topcoat.
      c. Topcoat: Alkyd, interior, semi-gloss (Gloss Level 5), MPI #47.
      d. Topcoat: Alkyd, interior, gloss (Gloss Level 6), MPI #48.
   2. Alkyd Dry-Fall System:
      a. Prime Coat: Primer, alkyd, anti-corrosive, for metal, MPI #79 or primer, alkyd, quick dry, for metal, MPI #76.
      b. Prime Coat: Shop primer specified in Section where substrate is specified.
      c. Topcoat: Dry fall, alkyd, flat, MPI #55.

B. Galvanized-Metal Substrates:
   1. Latex over Waterborne Primer System:
      a. Prime Coat: Primer, galvanized, water based, MPI #134.
      b. Intermediate Coat: Latex, interior, matching topcoat.
      c. Topcoat: Latex, interior, semi-gloss, (Gloss Level 5), MPI #54.
      d. Topcoat: Latex, interior, gloss, (Gloss Level 6, except minimum gloss of 65 units at 60 degrees), MPI #114.

C. Wood Substrates: Including plywood backing panels for equipment.
   1. Institutional Low-Odor/VOC Latex System:
      a. Prime Coat: Primer, latex, for interior wood, MPI #39.
      b. Intermediate Coat: Latex, interior, institutional low odor/VOC, matching topcoat.
      c. Topcoat: Latex, interior, institutional low odor/VOC, semi-gloss (Gloss Level 5), MPI #147.

D. Gypsum Board Substrates:
   1. Institutional Low-Odor/VOC Latex System:
      a. Prime Coat: Primer sealer, interior, institutional low odor/VOC, MPI #150.
      b. Intermediate Coat: Latex, interior, institutional low odor/VOC, matching topcoat.
      c. Topcoat: Latex, interior, institutional low odor/VOC, flat (Gloss Level 2), MPI #144.
      d. Topcoat: Latex, interior, institutional low odor/VOC, (Gloss Level 3), MPI #144.
      e. Topcoat: Latex, interior, institutional low odor/VOC, semi-gloss (Gloss Level 5), MPI #147.

END OF SECTION 099123

SECTION 10 11 46 - VISUAL DISPLAY FABRICS

PART 1 - GENERAL

1.1 RELATED DOCUMENTS

A. Drawings and general provisions of the Contract, including General and Supplementary Conditions and Division 01 Specification Sections, apply to this Section.

1.2 SUMMARY

A. Section includes dry-erase wall coverings.

B. Related Requirements:
1. Section 097200 "Wall Coverings" for standard vinyl wall coverings.
2. Section 101100 "Visual Display Units" for manufactured visual display units, including markerboards.

1.3 PREINSTALLATION MEETINGS

A. Preinstallation Conference: Conduct conference at [**Project site**] <**Insert location**>.

1.4 ACTION SUBMITTALS

A. Product Data: For each type of dry-erase wall covering. Include data on physical characteristics, durability, and flame-resistance characteristics.

B. Shop Drawings: Show location and extent. Indicate seams and termination points.

C. Samples for Initial Selection: For each type of dry-erase wall covering.

D. Samples[**for Verification**]: Full width by [**36-inch- (914-mm-) long**] <**Insert dimension**> section of dry-erase wall covering.

E. Product Schedule: For dry-erase wall coverings.[**Use same designations indicated on Drawings.**]

1.5 INFORMATIONAL SUBMITTALS

A. Product Test Reports: Based on evaluation of comprehensive tests performed by a qualified testing agency, for surface-burning characteristics of dry-erase wall coverings.

1.6 CLOSEOUT SUBMITTALS

A. Maintenance Data: For dry-erase wall coverings to include in maintenance manuals.

1.7 QUALITY ASSURANCE

A. Mockups: Build mockups to verify selections made under Sample submittals, to demonstrate aesthetic effects, and to set quality standards for installation.
   1. Build mockup of typical dry-erase wall covering as shown on Drawings.
   2. Approval of mockups does not constitute approval of deviations from the Contract Documents contained in mockups unless Architect specifically approves such deviations in writing.
   3. Subject to compliance with requirements, approved mockups may become part of the completed Work if undisturbed at time of Substantial Completion.

1.8 PROJECT CONDITIONS

A. Environmental Limitations: Do not deliver or install dry-erase wall coverings until spaces are enclosed and weathertight, wet-work in spaces is complete and dry, work above ceilings is complete, and temporary HVAC system is operating and maintaining ambient temperature and humidity conditions at occupancy levels during the remainder of the construction period.

B. Lighting: Do not install dry-erase wall covering until [**a permanent level of lighting**] <**Insert requirement**> is provided on the surfaces to receive dry-erase wall covering.

PART 2 - PRODUCTS

2.1 PERFORMANCE REQUIREMENTS

A. Surface-Burning Characteristics: Comply with ASTM E 84; testing by a qualified testing agency. Identify products with appropriate markings of applicable testing agency.
   1. Flame-Spread Index: [**25**] <**Insert value**> or less.
   2. Smoke-Developed Index: [**50**] [**450**] <**Insert value**> or less.

2.2 DRY-ERASE WALL COVERINGS

A. Dry-Erase Wall Covering: Intended for use with dry-erase markers[**and as a projection surface**] and consisting of [**low-gloss**] [**moderate-gloss**] [**high-gloss**] plastic film bonded to fabric backing.
   1. <Double click here to find, evaluate, and insert list of manufacturers and products.>
   2. Surface Graphics: 2-inch- (50-mm-) square grid.
   3. Color: [**As indicated by manufacturer's designations**] [**Match Architect's sample**] [**As selected by Architect from manufacturer's full range**] <**Insert color**>.

B. Magnetic Dry-Erase Wall Covering: Intended for use with dry-erase markers and magnetic aids and consisting of moderate-gloss plastic film bonded to ferrous-powdered fabric backing.
   1. <Double click here to find, evaluate, and insert list of manufacturers and products.>
   2. Color: [**As indicated by manufacturer's designations**] [**Match Architect's sample**] [**As selected by Architect from manufacturer's full range**] <**Insert color**>.

2.3 ACCESSORIES

A. Adhesives for Field Application: Strippable, mildew-resistant, nonstaining adhesive for use with dry-erase wall coverings; and for substrate application; as recommended in writing by dry-erase wall covering manufacturer.
   1. Adhesives shall have a VOC content of [**50**] <**Insert value**> g/L or less.
   2. Adhesives shall comply with the testing and product requirements of the California Department of Public Health's (formerly, the California Department of Health Services') "Standard Method for the Testing and Evaluation of Volatile Organic Chemical Emissions from Indoor Sources Using Environmental Chambers."

B. Primer/Sealer: Mildew-resistant primer/sealer complying with requirements in [**Section 099123 "Interior Painting"**] <**Insert Section number and title**> and recommended in writing by dry-erase wall covering manufacturer for intended substrate.

PART 3 - EXECUTION

3.1 EXAMINATION

A. Examine substrates and conditions, with Installer present, for compliance with requirements for installation tolerances, surface conditions of wall, moisture content, and other conditions affecting performance of the Work.

B. Examine walls and partitions for proper preparation for dry-erase wall covering.

C. Proceed with installation only after unsatisfactory conditions have been corrected.

3.2 PREPARATION

A. Comply with manufacturer's written instructions for surface preparation.

B. Clean substrates of substances, including dirt, mold, and mildew, that could impair the bond of dry-erase wall coverings or affect the smooth, finished surfaces of dry-erase wall coverings.

C. Prepare surfaces to achieve a smooth, dry, clean surface free of flaking, unsound coatings, cracks, defects, projections, and depressions.

D. Prepare substrates indicated to receive dry-erase wall covering as required by manufacturer's written instructions to achieve a smooth, dry, clean, structurally sound surface that is uniform in color.

1. Moisture Content: Maximum of [**4**] <**Insert number**> percent when tested with an electronic moisture meter.
2. Metals: If not factory primed, clean and apply metal as recommended in writing by primer/sealer manufacturer and wall-covering manufacturer.
3. Plaster: Allow new plaster to cure. Neutralize areas of high alkalinity. Prime with primer as recommended in writing by primer/sealer manufacturer and wall-covering manufacturer.
4. Gypsum Board: Prime with primer as recommended in writing by primer/sealer manufacturer and wall-covering manufacturer.
5. Painted Surfaces: Treat areas susceptible to pigment bleeding.

3.3 INSTALLATION

A. Dry-Erase Wall Covering: Comply with dry-erase wall-covering manufacturers' written installation instructions.
   1. Install seams horizontal and level, with lowest seam [**24 inches (610 mm)**] <**Insert dimension**> above finished floor. Railroad fabric (reverse roll direction) to ensure color matching.
   2. Double cut seams, with no gaps or overlaps. Remove air bubbles, wrinkles, blisters, and other defects.
   3. After installation, clean dry-erase wall covering according to manufacturer's written instructions. Remove excess adhesive at finished seams, perimeter edges, and adjacent surfaces.

3.4 CLEANING AND PROTECTION

A. Remove excess adhesive at finished seams, perimeter edges, and adjacent surfaces.

B. Clean dry-erase wall covering according to manufacturer's written instructions. Attach one removable cleaning instructions label to dry-erase wall covering in each room.

C. Reinstall hardware and hardware accessories, electrical plates and covers, light fixture trims, and similar items.

END OF SECTION 101146

SECTION 10 21 13.15 - STAINLESS-STEEL TOILET COMPARTMENTS

PART 1 - GENERAL

1.1 SUMMARY

A. Section includes stainless-steel toilet compartments configured as[toilet enclosures and urinal screens.

1.2 ACTION SUBMITTALS

A. Product Data: For each type of product.

B. Shop Drawings: For toilet compartments. Include plans, elevations, sections, details, and attachment details.

C. Samples for each type of toilet compartment material indicated.

1.3 INFORMATIONAL SUBMITTALS

A. Product certificates.

1.4 CLOSEOUT SUBMITTALS

A. Maintenance data.

PART 2 - PRODUCTS

2.1 PERFORMANCE REQUIREMENTS

A. Regulatory Requirements: Comply with applicable provisions in the U.S. Architectural & Transportation Barriers Compliance Board's ADA-ABA Accessibility Guidelines for Buildings and Facilities and ICC A117.1 for toilet compartments designated as accessible.

2.2 STAINLESS-STEEL TOILET COMPARTMENTS

A. Basis of Design: Bradley, Series 600 – Ceiling Hung Stainless Steel Toilet Partitions or Architect approved equal.

B. Toilet-Enclosure Style: Ceiling hung.

C. Urinal-Screen Style: Wall hung with integral flanges.

D. Door, Panel, and Pilaster Construction: Seamless, metal facing sheets pressure laminated to core material; with continuous, interlocking molding strip or lapped-and-formed edge closures; corners secured by welding or clips and exposed welds ground smooth. Exposed surfaces shall be free of pitting, seam marks, roller marks, stains, discolorations, telegraphing of core material, or other imperfections.
   1. Core Material: Manufacturer's standard sound-deadening honeycomb of resin-impregnated kraft paper in thickness required to provide finished thickness of 1 inch for doors and panels and 1-1/4 inches for pilasters.
   2. Grab-Bar Reinforcement: Provide concealed internal reinforcement for grab bars mounted on units of size and material adequate for panel to withstand applied downward load on grab bar of at least 250 lbf, when tested according to ASTM F 446, without deformation of panel.
   3. Tapping Reinforcement: Provide concealed reinforcement for tapping (threading) at locations where machine screws are used for attaching items to units.

E. Urinal-Screen Construction:
   1. Flat-Panel Urinal Screen: Matching panel construction.
   2. Integral-Flange, Wall-Hung Urinal Screen: Similar to panel construction, with integral full-height flanges for wall attachment, and maximum 1-1/4 inches thick.
   3. Wedge-Shaped, Wall-Hung Urinal Screen: Similar to panels, V-shaped, fabricated for concealed wall attachment, and maximum 6 inches wide at wall and minimum 1 inch wide at protruding end.

F. Facing Sheets and Closures: Stainless-steel sheet of nominal thicknesses as follows:
   1. Pilasters, Unbraced: Manufacturer's standard thickness, but not less than 0.050 inch.
   2. Panels: Manufacturer's standard thickness, but not less than 0.031 inch.
   3. Doors: Manufacturer's standard thickness, but not less than 0.031 inch.
   4. Flat-Panel Urinal Screens: Thickness matching the panels.
   5. Integral-Flange, Wall-Hung Urinal Screens: Manufacturer's standard thickness, but not less than 0.031 inch.

G. Brackets (Fittings):
   1. Stirrup Type: Ear or U-brackets; stainless steel.
   2. Full-Height (Continuous) Type: Manufacturer's standard design; stainless steel.

H. Stainless-Steel Finish: No. 4 bright, directional polish on exposed faces. Protect exposed surfaces from damage by application of strippable, temporary protective covering before shipment.

2.3 HARDWARE AND ACCESSORIES

A. Hardware and Accessories: Manufacturer's heavy-duty stainless-steel operating hardware and accessories.
   1. Provide units that comply with regulatory requirements for accessibility at compartments designated as accessible.

B. Anchorages and Fasteners: Manufacturer's standard exposed fasteners of stainless steel, finished to match the items they are securing, with theft-resistant-type heads. Provide sex-type bolts for through-bolt applications. For concealed anchors, use stainless-steel, hot-dip galvanized-steel, or other rust-resistant, protective-coated steel anchors compatible with related materials.

2.4 FABRICATION

A. Fabrication, General: Fabricate toilet compartment components to sizes indicated. Coordinate requirements and provide cutouts for through-partition toilet accessories and solid blocking within panel where required for attachment of toilet accessories.

B. Ceiling-Hung Units: Provide manufacturer's standard corrosion-resistant anchoring assemblies with leveling adjustment nuts at pilasters for connection to structural support above finished ceiling. Provide assemblies that support pilasters from structure without transmitting load to finished ceiling. Provide sleeves (caps) at tops of pilasters to conceal anchorage.

C. Door Size and Swings: Unless otherwise indicated, provide 24-inch-wide in-swinging doors for standard toilet compartments and 36-inch-wide out-swinging doors with a minimum 32-inch-wide clear opening for compartments designated as accessible.

PART 3 - EXECUTION

3.1 INSTALLATION

A. General: Comply with manufacturer's written installation instructions. Install units rigid, straight, level, and plumb. Secure units in position with manufacturer's recommended anchoring devices.
   1. Maximum Clearances:
      a. Pilasters and Panels: 1/2 inch.
      b. Panels and Walls: 1 inch.
   2. Stirrup Brackets: Secure panels to walls and to pilasters with no fewer than three brackets attached at midpoint and near top and bottom of panel.
      a. Locate wall brackets so holes for wall anchors occur in masonry or tile joints.
      b. Align brackets at pilasters with brackets at walls.

3.2 ADJUSTING

A. Hardware Adjustment: Adjust and lubricate hardware according to hardware manufacturer's written instructions for proper operation. Set hinges on in-swinging doors to hold doors open approximately 30 degrees from closed position when unlatched. Set hinges on out-swinging doors to return doors to fully closed position.

END OF SECTION 102113.15

SECTION 10 22 39 - FOLDING PANEL PARTITIONS

PART 1 - GENERAL

1.1 SUMMARY

A. Section Includes:
   1. Electrically operated, acoustical panel partitions.

1.2 PREINSTALLATION MEETINGS

A. Preinstallation Conference: Conduct conference at Project site.

1.3 ACTION SUBMITTALS

A. Product Data: For each type of product.

B. Shop Drawings: For operable panel partitions.
   1. Include plans, elevations, sections, details, and attachments to other work.
   2. Indicate stacking and operating clearances. Indicate location and installation requirements for hardware and track, blocking, and direction of travel.
   3. Include diagrams for power, signal, and control wiring.

C. Samples: For each exposed product and for each color and texture specified.

1.4 INFORMATIONAL SUBMITTALS

A. Coordination Drawings: Reflected ceiling plans, drawn to scale and coordinated with each other, using input from installers of the items involved.

B. Setting Drawings: For items and cutouts required in other work, including support-beam, mounting-hole template.

C. Product certificates.

D. Product test reports.

E. Sample warranty.

1.5 CLOSEOUT SUBMITTALS

A. Operation and maintenance data.

1.6 QUALITY ASSURANCE

A. Installer Qualifications: An entity that employs installers and supervisors who are trained and approved by manufacturer.

1.7 WARRANTY

A. Special Warranty: Manufacturer agrees to repair or replace components of operable panel partitions that fail in materials or workmanship within specified warranty period.
   1. Warranty Period: Two years from date of Substantial Completion.

PART 2 - PRODUCTS

2.1 PERFORMANCE REQUIREMENTS

A. Acoustical Performance: Provide operable panel partitions tested by a qualified testing agency for the following acoustical properties according to test methods indicated:
   1. Sound-Transmission Requirements: Operable panel partition assembly tested for laboratory sound-transmission loss performance according to ASTM E 90, determined by ASTM E 413, and rated for not less than the STC indicated.
   2. Noise-Reduction Requirements: Operable panel partition assembly, identical to partition tested for STC, tested for sound-absorption performance according to ASTM C 423, and rated for not less than the NRC indicated.

B. Electrical Components, Devices, and Accessories: Listed and labeled as defined in NFPA 70, by a qualified testing agency, and marked for intended location and application.

2.2 OPERABLE ACOUSTICAL PANELS

A. Operable Acoustical Panels: Partition system, including panels, seals, finish facing, suspension system, operators, and accessories.
   1. Basis of Design: Skyfold Classic 51, for Operable Acoustical Panels or Architects approved equal.

B. Panel Operation: Electrically operated vertically retractable hinged panels.

C. Panel Construction: As required to support panel from suspension components and with reinforcement for hardware attachment. Fabricate panels with tight hairline joints and concealed fasteners. Fabricate panels so finished in-place partition is rigid; level; plumb; aligned, with tight joints and uniform appearance; and free of bow, warp, twist, deformation, and surface and finish irregularities.

D. Dimensions: Fabricate operable acoustical panel partitions to form an assembled system of dimensions indicated and verified by field measurements.

E. STC: Not less than 51.

F. NRC: Not less than 0.65.

G. Panel Materials:
   1. Steel Frame: Steel sheet, manufacturer's standard thickness.
   2. Steel Face/Liner Sheets: Tension-leveled steel sheet, manufacturer's standard thickness.

H. Panel Closure: Manufacturer's standard.

I. Hardware: Manufacturer's standard as required to operate operable panel partition and accessories; with decorative, protective finish.

2.3 SEALS

A. General: Provide seals that produce operable panel partitions complying with performance requirements and the following:
   1. Seals made from materials and in profiles that minimize sound leakage.
   2. Seals fitting tight at contact surfaces and sealing continuously between adjacent panels and between operable panel partition perimeter and adjacent surfaces, when operable panel partition is closed.

B. Horizontal Bottom Seals: Manufacturer's standard continuous-contact seal exerting uniform constant pressure on floor.

2.4 PANEL FINISH FACINGS

A. General: Provide finish facings for panels that are factory applied to operable panel partitions with appropriate backing, using mildew-resistant nonstaining adhesive as recommended by facing manufacturer's written instructions.
   1. Material/Color/Pattern: As selected by Architect from manufacturer's full range.

B. Cap-Trimmed Edges: Protective perimeter-edge trim with tight hairline joints concealing edges of panel and finish facing.

C. Trimless Edges: Fabricate exposed panel edges so finish facing wraps uninterrupted around panel, covering edge and resulting in an installed partition with facing visible on vertical panel edges, without trim, for minimal sightlines at panel-to-panel joints.

2.5 SUSPENSION SYSTEMS

A. Steel mounted directly to overhead structural support, designed for operation, size, and weight of operable panel partition indicated. Size to support partition operation and storage without damage to suspension system, operable panel partitions, or adjacent construction. Limit deflection to no more than 0.10 inch between bracket supports. Provide a continuous sections and accessories to accommodate configuration and layout indicated for partition operation and storage.

2.6 ELECTRIC OPERATORS

A. General: Factory-assembled electric operation system of size and capacity recommended and provided by operable panel partition manufacturer for partition specified; with electric motor and factory-prewired motor controls, control stations, control devices, and accessories required for operation. Include wiring from control stations to motor. Coordinate operator wiring requirements and electrical characteristics with building electrical system.

B. Comply with NFPA 70.

C. Control Equipment: Comply with NEMA ICS 1, NEMA ICS 2, and NEMA ICS 6.

D. Control Stations: Two single-key-operated, constant-pressure control stations located remotely from each other on opposite sides and opposite ends of partition run. Wire in series to require simultaneous activation of both key stations to operate partition. Each three-position control station labeled "Open," "Close," and "Stop." Furnish two keys per station.

E. Obstruction-Detection Devices: Equip each motorized operable panel partition with indicated automatic safety sensor that causes operator to immediately stop and reverse direction.

F. Limit Switches: Adjustable switches, interlocked with motor controls and set to automatically stop operable panel partition at fully extended and fully stacked positions.

PART 3 - EXECUTION

3.1 INSTALLATION

A. General: Comply with ASTM E 557 except as otherwise required by operable panel partition manufacturer's written installation instructions.

B. Install operable panel partitions and accessories after other finishing operations, including painting, have been completed in area of partition installation.

C. Broken, cracked, chipped, deformed, or unmatched panels are not acceptable.

D. Broken, cracked, deformed, or unmatched gasketing or gasketing with gaps at butted ends is not acceptable.

E. Light-Leakage Test: Illuminate one side of partition installation and observe vertical joints and top and bottom seals for voids. Adjust partitions for alignment and full closure of vertical joints and full closure along top and bottom seals.

3.2 ADJUSTING

A. Verify that safety devices are properly functioning.

3.3 DEMONSTRATION

A. Engage a factory-authorized service representative to train Owner's maintenance personnel to adjust, operate, and maintain operable panel partitions.

END OF SECTION 102239

SECTION 10 28 00 - TOILET ACCESSORIES

PART 1 - GENERAL

1.1 SUMMARY

A. Section Includes:
   1. Toilet accessories.

1.2 ACTION SUBMITTALS

A. Product Data: For each type of product.

B. Samples: Full size, for each exposed product and for each finish specified.

1.3 CLOSEOUT SUBMITTALS

A. Maintenance data.

PART 2 - PRODUCTS

2.1 PERFORMANCE REQUIREMENTS

A. Electrical Components, Devices, and Accessories: Listed and labeled as defined in NFPA 70, by a qualified testing agency, and marked for intended location and application.

2.2 TOILET ACCESSORIES

A. Toilet Tissue (Roll) Dispenser: Bobrick, B-2892
   1. Description: Surface mounted twin jumbo-roll toilet tissue dispenser with hinged front secured with tumbler lockset.
   2. Mounting: Surface mounted].
   3. Capacity: Designed for 2 rolls up to 10 inches in diameter.
   4. Material and Finish: Stainless steel, No. 4 finish (satin).

B. Waste Receptacle: Bradley, 315-35.
   1. Mounting: Self-closing disposal-opening cover, recessed.
   2. Minimum Capacity: 9.2 gallons.
   3. Material and Finish: Stainless steel, No. 4 finish (satin).
   4. Liner: Reusable vinyl liner.
   5. Lockset: Tumbler type for waste receptacle.

C. Combination Towel (Roll) Dispenser/Waste Receptacle: Bobrick, B3974
   1. Description: Combination unit for dispensing preset length of roll paper towers, with removable waste receptacle.
   2. Mounting: Recessed.
   3. Minimum Tower-Dispenser Capacity: 8-inch wide, 800 foot-long roll.
   4. Minimum Waste Receptacle Capacity: 12 gal.
   5. Material and Finish: Stainless Steel, No. 4 finish (satin).
   6. Waste Receptacle: Stainless Steel, NO. 4 flush (satin).
   7. Lockset: Tumbler type for towel dispenser compartment and waste receptacle.

D. Sensor Activated, Electronic Foam Soap Dispenser:
   1. Sloan Optima Accessories, SJS-1750.
   2. Description: Automatic dispenser with infrared sensor to detect presence of hands; AC powered; designed for dispensing foam soap.
   3. Mounting: Deck mounted on vanity.
   4. Capacity: 1000 ml
   5. Refill Indicator: LED indicator.

E. Grab Bar: Bobrick, 5806 x 36 and 5806 x 42
   1. Mounting: Flanges with concealed fasteners.
   2. Material: Stainless steel, 1/8 inch thick.
      a. Finish: Smooth, No. 4 finish (satin).
   3. Outside Diameter: 1-1/4 inches.
   4. Configuration and Length: As indicated on Drawings.

F. Sanitary-Napkin Disposal Unit: Bobrick, B-254
   1. Mounting: Surface mounted.
   2. Door or Cover: Self-closing, disposal-opening cover with tumbler lockset.
   3. Receptacle: Removable.
   4. Material and Finish: Stainless steel, No. 4 finish (satin).

G. Seat-Cover Dispenser: Bobrick B-221
   1. Mounting: Surface mounted.
   2. Minimum Capacity: 500 seat covers.
   3. Exposed Material and Finish: Stainless steel, No. 4 finish (satin).

H. Frameless Mirrors:
   1. Refer to Specification Section 08 80 00 Glazing or frameless mirrors.

I. Coat Hook and Bumper: Bobrick B-212
   1. Description: 3-3/4 inch cast aluminum clothes hook and bumper.
   2. Material and Finish: cast aluminum.

J. Shelf: Bobrick B-295 x 24
   1. Description: With exposed edges turned down not less than 3/4 inch and supported by two triangular brackets welded to shelf underside.
   2. Size: 24 inches long by 5 inches deep.
   3. Material and Finish: Not less than nominal 18 gauge thick stainless steel, No. 4 finish (satin).

2.3 WARM-AIR DRYERS

A. Multiple Airflow Warm-Air Dryer: Dyson, AB11
   1. Description: Multiple airflow warm-air hand dryer, using two or more airstreams for rapid hand drying.
   2. Mounting: Recessed, with low-profile design.
   3. Electrical Requirements: 220V, 6.6A, 1600W.

2.4 FABRICATION

A. Keys: Provide universal keys for internal access to accessories for servicing and resupplying. Provide minimum of six keys to Owner's representative.

PART 3 - EXECUTION

3.1 INSTALLATION

A. Install accessories according to manufacturers' written instructions, using fasteners appropriate to substrate indicated and recommended by unit manufacturer. Install units level, plumb, and firmly anchored in locations and at heights indicated.

B. Grab Bars: Install to withstand a downward load of at least 250 lbf, when tested according to ASTM F 446.

END OF SECTION 102800

SECTION 104413 - FIRE PROTECTION CABINETS

PART 1 - GENERAL

1.1 SUMMARY

A. Section includes fire-protection cabinets for portable fire extinguishers.

1.2 ACTION SUBMITTALS

A. Product Data: For each type of product.

B. Shop Drawings: For fire-protection cabinets.

1.3 CLOSEOUT SUBMITTALS

A. Maintenance data.

1.4 COORDINATION

A. Coordinate size of fire-protection cabinets to ensure that type and capacity of fire extinguishers indicated are accommodated.

B. Coordinate sizes and locations of fire-protection cabinets with wall depths.

PART 2 - PRODUCTS

2.1 FIRE-PROTECTION CABINET

A. Cabinet Type: Suitable for fire extinguisher.
   1. Basis of Design: Larsen Architectural Series for Fire Extinguisher Cabinets or Architects approved equal.

B. Cabinet Construction: Nonrated.

C. Cabinet Material: Stainless-steel sheet.

D. Semirecessed Cabinet: One-piece combination trim and perimeter door frame overlapping surrounding wall surface with exposed trim face and wall return at outer edge (backbend).
   1. Square-Edge Trim: 1-1/4- to 1-1/2-inch backbend depth.

E. Cabinet Trim Material: Stainless-steel sheet.

F. Door Material: Stainless-steel sheet.

G. Door Style: Vertical duo panel with frame.

H. Door Glazing: Tempered float glass (clear).

I. Door Hardware: Manufacturer's standard door-operating hardware of proper type for cabinet type, trim style, and door material and style indicated.

J. Accessories:
   1. Door Lock: Cam lock that allows door to be opened during emergency by pulling sharply on door handle.
   2. Identification: Lettering complying with authorities having jurisdiction for letter style, size, spacing, and location. Locate as directed by Architect.

K. Materials:
   1. Stainless Steel: ASTM A 666, Type 304.
      a. Finish: No. 4 directional satin finish.
   2. Tempered Float Glass: ASTM C 1048, Kind FT, Condition A, Type I, Quality q3, 3 mm thick.

2.2 FABRICATION

A. Fire-Protection Cabinets: Provide manufacturer's standard box (tub) with trim, frame, door, and hardware to suit cabinet type, trim style, and door style indicated.

PART 3 - EXECUTION

3.1 INSTALLATION

A. Prepare recesses for semirecessed fire-protection cabinets as required by type and size of cabinet and trim style.

B. Install fire-protection cabinets in locations and at mounting heights indicated or, if not indicated, at heights acceptable to authorities having jurisdiction.

C. Fire-Protection Cabinets: Fasten cabinets to structure, square and plumb.

D. Identification: Apply vinyl lettering at locations indicated.

E. Adjust fire-protection cabinet doors to operate easily without binding. Verify that integral locking devices operate properly.

END OF SECTION 104413

SECTION 10 44 16 - FIRE EXTINGUISHERS

PART 1 - GENERAL

1.1 SUMMARY

A. Section includes portable, hand-carried fire extinguishers and mounting brackets for fire extinguishers.

1.2 ACTION SUBMITTALS

A. Product Data: For each type of product.

1.3 INFORMATIONAL SUBMITTALS

A. Warranty: Sample of special warranty.

1.4 CLOSEOUT SUBMITTALS

A. Operation and maintenance data.

1.5 COORDINATION

A. Coordinate type and capacity of fire extinguishers with fire-protection cabinets to ensure fit and function.

1.6 WARRANTY

A. Special Warranty: Manufacturer's standard form in which manufacturer agrees to repair or replace fire extinguishers that fail in materials or workmanship within specified warranty period.
   1. Warranty Period: Six years from date of Substantial Completion.

PART 2 - PRODUCTS

2.1 PERFORMANCE REQUIREMENTS

A. NFPA Compliance: Fabricate and label fire extinguishers to comply with NFPA 10, "Portable Fire Extinguishers."

B. Fire Extinguishers: Listed and labeled for type, rating, and classification by an independent testing agency acceptable to authorities having jurisdiction.

2.2 PORTABLE, HAND-CARRIED FIRE EXTINGUISHERS

A. Fire Extinguishers: Type, size, and capacity for each fire-protection cabinet and mounting bracket indicated.
   1. Manufacturers: Subject to compliance with requirements, available manufacturers offering products that may be incorporated into the Work include, but are not limited to, the following]:
      a. Ansul Incorporated.
      b. JL Industries, Inc.; a division of the Activar Construction Products Group.
      c. Larsens Manufacturing Company.
   2. Valves: Manufacturer’s standard.
   3. Handles and Levers: Manufacturer’s standard.
   4. Instruction Labels: Include pictorial marking system complying with NFPA 10, Appendix B, and bar coding for documenting fire-extinguisher location, inspections, maintenance, and recharging.

B. Multipurpose Dry-Chemical Type: UL-rated 10-16 nominal capacity, with monoammonium phosphate-based dry chemical in manufacturer's standard enameled container.

2.3 MOUNTING BRACKETS

A. Mounting Brackets: Manufacturer's standard galvanized steel, designed to secure fire extinguisher to wall or structure, of sizes required for types and capacities of fire extinguishers indicated, with plated or red baked-enamel finish.
   1. Manufacturers: Subject to compliance with requirements, available manufacturers offering products that may be incorporated into the Work include, but are not limited to, the following]:
      a. Ansul Incorporated.
      b. JL Industries, Inc.; a division of the Activar Construction Products Group.
      c. Larsens Manufacturing Company.

B. Identification: Lettering complying with authorities having jurisdiction for letter style, size, spacing, and location. Locate as indicated by Architect.
   1. Identify bracket-mounted fire extinguishers with the words "FIRE EXTINGUISHER" in red letter decals applied to mounting surface.
      a. Orientation: Vertical.

PART 3 - EXECUTION

3.1 INSTALLATION

A. Examine fire extinguishers for proper charging and tagging.
   1. Remove and replace damaged, defective, or undercharged fire extinguishers.

B. Install fire extinguishers and mounting brackets in locations indicated and in compliance with requirements of authorities having jurisdiction.
   1. Mounting Brackets: 54 inches above finished floor to top of fire extinguisher.

C. Mounting Brackets: Fasten mounting brackets to surfaces, square and plumb, at locations indicated.

END OF SECTION 104416

SECTION 10 55 00.16 - PRIVATE-DELIVERY POSTAL SPECIALTIES

PART 1 - GENERAL

1.1 RELATED DOCUMENTS

A. Drawings and general provisions of the Contract, including General and Supplementary Conditions and Division 01 Specification Sections, apply to this Section.

1.2 SUMMARY

A. Section Includes:
1. Horizontal mail receptacles.
2. Vertical mail receptacles.
3. Mail collection boxes.
4. Data distribution boxes.

1.3 ACTION SUBMITTALS

A. Product Data: For each type of product.
1. Include construction details, material descriptions, dimensions of individual components and profiles, and finishes for each type of postal specialty.

B. Shop Drawings: For postal specialties.
1. Include plans, elevations, sections, and attachment details.
2. Include identification sequence for compartments.
3. Include layout of identification text.
4. Include setting drawings, templates, and installation instructions for anchor bolts and other anchorages installed as part of the Work of other Sections.

C. Samples for Verification: For each type of exposed finish, prepared on 6-by-6-inch-square Samples.

1.4 INFORMATIONAL SUBMITTALS

A. Sample Warranty: For special warranty.

1.5 CLOSEOUT SUBMITTALS

A. Maintenance Data: For postal specialties and finishes to include in maintenance manuals.

1.6 MAINTENANCE MATERIAL SUBMITTALS

A. Furnish extra materials that match products installed and that are packaged with protective covering for storage and identified with labels describing contents.
   1. Key Blanks: [**50**] <**Insert number**> for every <**Insert number**> locks or fraction thereof, for each type of compartment-door lock installed.

1.7 DELIVERY, STORAGE, AND HANDLING

A. Furnish lock keys with temporary identification for their respective locks, bagged, and securely taped inside the collection compartment for shipping.

B. Deliver lock keys to Owner by registered mail or overnight package service with a record of each corresponding lock and key number.

C. Deliver combination-lock combinations to Owner by registered mail or overnight package service with a record of each corresponding lock and combination.

1.8 WARRANTY

A. Special Warranty: Manufacturer agrees to repair or replace components of postal specialties that fail in materials or workmanship within specified warranty period.
   1. Failures include, but are not limited to, the following:
      a. Structural failures.
      b. Faulty operation of hardware[**including electrical components**].
      c. Deterioration of metals, metal finishes, and other materials beyond normal weathering.
   2. Warranty Period: [**Five**] <**Insert number**> years from date of Substantial Completion.

PART 2 - PRODUCTS

2.1 HORIZONTAL MAIL RECEPTACLES

A. Front-Loading, Horizontal Mail Receptacles <**Insert drawing designation**>: Consisting of multiple compartments with fixed, solid compartment backs, enclosed within recessed wall box. Provide access to compartments for distributing incoming mail from front of unit by unlocking master lock and swinging side-hinged master door to provide accessibility to entire group of compartments. Provide access to each compartment for removing mail by swinging compartment door.
   1. <Double click here to find, evaluate, and insert list of manufacturers and products.>
   2. Front-Loading Master Door: Braced and framed to hold compartment doors; with master-door lock and concealed, full-length, stainless-steel piano hinge on one side. Fabricate master door to remain open while mail is deposited.
      a. Master-Door Lock: Manufacturer's standard five-pin tumbler, cylinder lock; with [**two**] [**three**] <**Insert number**> keys.

b. Master-Door Lock: Cylinder lock keyed to building keying system; with [**two**] [**three**] <**Insert number**> keys. Provide cylinders specified in [**Section 087100 "Door Hardware."**] [**Section 087111 "Door Hardware (Descriptive Specification)."**]

3. Compartments with Aluminum Doors: Manufacturer's standard compartments with extruded aluminum doors. Equip each with lock, tenant identification, and concealed, full-length, flush hinge on one side. Provide one compartment prepared for master-door lock[**and with outgoing mail slot**].
   a. Compartments: [**Number and size as follows:**] [**As indicated on Drawings, of the following sizes:**] [**As indicated on Drawings.**]
      1) Size 1: Provide <**Insert number**> compartments with inside dimensions not less than 3 inches high by 6 inches wide by 15 inches deep.
      2) Size 2: Provide <**Insert number**> compartments with inside dimensions not less than 5 inches high by 3-1/2 inches wide by 15 inches deep.
      3) Size 3: Provide <**Insert number**> compartments with inside dimensions not less than 5 inches high by 7-1/2 inches wide by 15 inches deep.
      4) Size 4: Provide <**Insert number**> compartments with inside dimensions not less than 10-1/2 inches high by 3-1/2 inches wide by 15 inches deep.
      5) Size 5: Provide <**Insert number**> compartments with inside dimensions not less than 10-1/2 inches high by 7-1/2 inches wide by 15 inches deep.
   b. Tenant Identification: 2-inch-wide by 5/8-inch-high, clear-plastic cardholder set in recessed slot in face of compartment door. Provide cardboard strip and self-adhesive numbers.
   c. Tenant Identification: Laminated, black plastic tabs, engraved with identification and adhesively applied to face of compartment door.
   d. Tenant Identification: Identification engraved into face of compartment door.
4. Compartments with Ornamental Metal Doors: Manufacturer's standard compartments with ornamental doors fabricated from solid, die-cast [**brass**] [**zinc**]. Equip each with[**glass window,**] lock, nameplate, and two hinges.
   a. Compartments: [**Number and size as follows:**] [**As indicated on Drawings, of the following sizes:**] [**As indicated on Drawings.**]
      1) Size 1: Provide <**Insert number**> compartments 15 inches deep with doors 5 inches high by 3-1/2 inches wide.
      2) Size 2: Provide <**Insert number**> compartments 15 inches deep with doors 6 inches high by 5-1/2 inches wide.
      3) Size 3: Provide <**Insert number**> compartments 15 inches deep with doors 6 inches high by 11 inches wide.
5. Compartment-Door Locks: Five-pin tumbler, cylinder [**cam**] [**spring-latch-type**] locks capable of at least 1000 key changes; with [**two**] [**three**] <**Insert number**> keys for each compartment door. Key each compartment differently.
6. Compartment-Door Locks: Removable core locks, furnished by Owner and installed as the Work of this Section.
7. Compartment-Door Locks: Spring-latch-type lock designed to accommodate cylinders keyed to building keying system; with [**two**] [**three**] <**Insert number**> keys for each compartment door. Provide cylinders specified in [**Section 087100 "Door Hardware."**] [**Section 087111 "Door Hardware (Descriptive Specification)."**]
8. Compartment-Door Locks: Three-digit, single-dial, combination locks with spring latch and automatic throw off. Set each compartment with different combination.
9. Frames: Ganged and nested units, with cardholder and blank cards for tenant's identification behind each compartment.

10. Snap-on Trim: Fabricated from the same material and finish as compartment doors.
11. Concealed Components and Mounting Frames: Aluminum or steel sheet with manufacturer's standard finish.
12. Exposed Aluminum Finish: Finish surfaces exposed to view as follows:
    a. Anodic Finish: [**Clear**] <**Insert color**>.
    b. Baked-Enamel or Powder-Coated Finish: [**Black**] [**Dark bronze**] [**Gold**] [**Medium bronze**] [**Silver**] [**Color as indicated by manufacturer's designations**] [**Color as selected by Architect from manufacturer's full range**] <**Insert color**>.
13. Brass Finish: [**Buffed finish, lacquered**] [**Hand-rubbed finish, lacquered**] [**Brushed satin, lacquered**] <**Insert finish**>.
14. Zinc Finish: Manufacturer's standard powder-coated finish, [**tan**] <**Insert color**>.

B. Rear-Loading, Horizontal Mail Receptacles <**Insert drawing designation**>: Consisting of multiple compartments enclosed within recessed wall box. Provide access to compartments for distributing incoming mail from rear of unit with accessibility to entire group of compartments. Provide access to each compartment for removing mail by swinging compartment door.
1. <Double click here to find, evaluate, and insert list of manufacturers and products.>
2. Rear-Loading Cover: [**Not required**] [**Lift-off rear cover fabricated from extruded aluminum or aluminum sheet, finished to match front of unit**].
3. Rear-Loading Door: Side hinged, fabricated from extruded aluminum or aluminum sheet[**, finished to match front of unit**]; with full-length, stainless-steel piano hinge on one side and [**positive-latching**] [**locking**] mechanism on the other. Fabricate rear-loading door to open not less than 90 degrees and to remain open while mail is deposited.
    a. Rear-Door Lock: Manufacturer's standard five-pin tumbler, cylinder lock; with [**two**] [**three**] <**Insert number**> keys.
    b. Rear-Door Lock: Cylinder lock keyed to building keying system; with [**two**] [**three**] <**Insert number**> keys. Provide cylinders specified in [**Section 087100 "Door Hardware."**] [**Section 087111 "Door Hardware (Descriptive Specification)."**]
4. Compartments with Aluminum Doors: Manufacturer's standard compartments with doors fabricated from extruded aluminum. Equip each with lock, tenant identification, and concealed, full-length, flush hinge on one side. Provide one compartment prepared for master-door lock[**and with outgoing mail slot**].
    a. Compartments: [**Number and size as follows:**] [**As indicated on Drawings, of the following sizes:**] [**As indicated on Drawings.**]
        1) Size 1: Provide <**Insert number**> compartments with inside dimensions not less than 3 inches high by 6 inches wide by 15 inches deep.
        2) Size 2: Provide <**Insert number**> compartments with inside dimensions not less than 5 inches high by 3-1/2 inches wide by 15 inches deep.
        3) Size 3: Provide <**Insert number**> compartments with inside dimensions not less than 5 inches high by 7-1/2 inches wide by 15 inches deep.
        4) Size 4: Provide <**Insert number**> compartments with inside dimensions not less than 10-1/2 inches high by 3-1/2 inches wide by 15 inches deep.
        5) Size 5: Provide <**Insert number**> compartments with inside dimensions not less than 10-1/2 inches high by 7-1/2 inches wide by 15 inches deep.
    b. Tenant Identification: 2-inch-wide by 5/8-inch-high, clear-plastic cardholder set in recessed slot in face of compartment door. Provide cardboard strip and self-adhesive numbers.

c. Tenant Identification: Laminated, black plastic tabs, engraved with identification and adhesively applied to face of compartment door.
d. Tenant Identification: Identification engraved into face of compartment door.

5. Compartments with Ornamental Metal Doors: Manufacturer's standard compartments with ornamental doors fabricated from [**brass**] [**zinc**]. Equip each with[**glass window,**] lock, nameplate, and two hinges.
   a. Compartments: [**Number and size as follows:**] [**As indicated on Drawings, of the following sizes:**] [**As indicated on Drawings.**]
      1) Size 1: Provide <**Insert number**> compartments 15 inches deep with doors 5 inches high by 3-1/2 inches wide.
      2) Size 2: Provide <**Insert number**> compartments 15 inches deep with doors 6 inches high by 5-1/2 inches wide.
      3) Size 3: Provide <**Insert number**> compartments 15 inches deep with doors 6 inches high by 11 inches wide.
6. Compartment-Door Locks: Five-pin tumbler, cylinder [**cam**] [**spring-latch-type**] locks capable of at least 1000 key changes; with [**two**] [**three**] <**Insert number**> keys for each compartment door. Key each compartment differently.
7. Compartment-Door Locks: Removable core locks, furnished by Owner and installed as the Work of this Section.
8. Compartment-Door Locks: Spring-latch-type lock designed to accommodate cylinders keyed to building keying system; with [**two**] [**three**] <**Insert number**> keys for each compartment door. Provide cylinders specified in [**Section 087100 "Door Hardware."**] [**Section 087111 "Door Hardware (Descriptive Specification)."**]
9. Compartment-Door Locks: Three-digit, single-dial, combination locks with spring latch and automatic throw off. Set each compartment with different combination.
10. Frames: Ganged and nested units, with cardholder and blank cards for tenant's identification behind each compartment.
11. Snap-on Trim: Fabricated from the same material and finish as compartment doors.
12. Concealed Components and Mounting Frames: Aluminum or steel sheet with manufacturer's standard finish.
13. Exposed Aluminum Finish: Finish surfaces exposed to view as follows:
    a. Anodic Finish: [**Clear**] <**Insert color**>.
    b. Baked-Enamel or Powder-Coated Finish: [**Black**] [**Dark bronze**] [**Gold**] [**Medium bronze**] [**Silver**] [**Color as indicated by manufacturer's designations**] [**Color as selected by Architect from manufacturer's full range**] <**Insert color**>.
14. Brass Finish: [**Buffed finish, lacquered**] [**Hand-rubbed finish, lacquered**] [**Brushed satin, lacquered**] <**Insert finish**>.
15. Zinc Finish: Manufacturer's standard powder-coated finish, [**tan**] <**Insert color**>.

2.2 VERTICAL MAIL RECEPTACLES

A. Vertical Mail Receptacles <**Insert drawing designation**>: Consisting of vertical compartments enclosed within wall box; with inside dimensions of each compartment not less than 15 inches high by 5 inches wide by 6 inches deep. Provide access to compartments for distributing incoming mail from front of unit by unlocking master lock and tilting inner compartments forward as a group. Provide access to each compartment for removing mail by swinging compartment door.
   1. <Double click here to find, evaluate, and insert list of manufacturers and products.>

2. Mounting: [**Recessed**] [**Semirecessed with mounting frame**] [**Surface mounted with mounting frame**] [**As indicated on Drawings**].
3. Compartments: Provide [**three**] <**Insert number up to seven**>.
4. Compartments: Provide number as indicated on Drawings.
5. Compartment Doors and Frames: Fabricated from striated, extruded aluminum. Equip each compartment door with lock, slot in face of door to receive tenant identification, and concealed, full-length, flush hinge on one side.[**Provide one double-wide compartment with outgoing mail slot.**]
   a. Tenant Identification: [**Cardboard name and number tab**] [**Laminated, black plastic tabs, engraved with identification**].
   b. Compartment-Door Locks: Five-pin tumbler, cylinder [**cam**] [**spring-latch-type**] locks capable of at least 1000 key changes; with [**two**] [**three**] <**Insert number**> keys for each compartment door. Key each compartment differently.
   c. Compartment-Door Locks: Removable core locks, furnished by Owner and installed as the Work of this Section.
   d. Compartment-Door Locks: Spring-latch-type lock designed to accommodate cylinders keyed to building keying system; with [**two**] [**three**] <**Insert number**> keys for each compartment door. Provide cylinders specified in [**Section 087100 "Door Hardware."**] [**Section 087111 "Door Hardware (Descriptive Specification)."**]
6. Frames: Ganged and nested units, with cardholder and blank cards for tenant's identification within each compartment.
7. Concealed Components and Mounting Frames: Aluminum or steel sheet with manufacturer's standard finish.
8. Exposed Aluminum Finish: Finish surfaces exposed to view as follows:
   a. Anodic Finish: [**Clear**] [**Gold**] [**As indicated by manufacturer's designations**] [**As selected by Architect from manufacturer's full range**] <**Insert color**>.
   b. Baked-Enamel or Powder-Coated Finish: [**Aluminum**] [**Black**] [**Brass**] [**Dark bronze**] [**Gold**] [**Green**] [**Ivory**] [**Medium bronze**] [**Silver**] [**Color as indicated by manufacturer's designations**] [**Color as selected by Architect from manufacturer's full range**] <**Insert color**>.

2.3 MAIL COLLECTION BOXES

A. Mail Collection Boxes <**Insert drawing designation**>: Consisting of single compartment of same depth as horizontal mail receptacles, enclosed within wall box, with slot in top of front to receive mail. Provide door for collecting mail from front of unit.
   1. <Double click here to find, evaluate, and insert list of manufacturers and products.>
   2. Height: Sized to match height of [**four**] [**five**] [**six**] [**seven**] horizontal mail receptacles.
   3. Mounting: [**Recessed**] [**Semirecessed**] [**Surface mounted**].
   4. Compartment Doors and Frames: Fabricated from extruded aluminum or aluminum sheet that is [**full height of unit including**] [**in portion of unit below**] mail slot, and equipped with lock and concealed, continuous side hinge.
      a. Door Lock: Cylinder lock keyed to building keying system; with [**two**] [**three**] <**Insert number**> keys. Provide cylinders specified in [**Section 087100 "Door Hardware."**] [**Section 087111 "Door Hardware (Descriptive Specification)."**]
      b. Identification: Engrave face of compartment door with 1-inch-high letters as follows: "[**LETTERS**] [**OUTGOING MAIL**] [**OFFICE**] <**Insert text**>."
   5. Aluminum Finish: Finish surfaces exposed to view as follows:

a. Anodic Finish: [**Clear**] <**Insert color**>.
b. Baked-Enamel or Powder-Coated Finish: [**Black**] [**Dark bronze**] [**Gold**] [**Medium bronze**] [**Color as indicated by manufacturer's designations**] [**Color as selected by Architect from manufacturer's full range**] <**Insert color**>.

2.4 DATA DISTRIBUTION BOXES

A. Data Distribution Boxes <**Insert drawing designation**>: Consisting of multiple compartments contained within enclosure.
1. <Double click here to find, evaluate, and insert list of manufacturers and products.>
2. Enclosure Configuration: [**Freestanding**] [**Recessed in wall**] [**Recessed in wall and installed between rack ladders**].
3. Compartment Access: Provide access to compartments as follows:
   a. For Distributing Incoming Mail from Front of Unit: Mail slot in each compartment door.
   b. For Distributing Incoming Mail from Rear of Unit: Open backs[**with aluminum cover finished to match front of unit**].
   c. For Removing Mail: Unlocking and swinging compartment door.
4. Compartments: [**Number and size as follows:**] [**As indicated on Drawings, of the following sizes:**] [**As indicated on Drawings.**]
   a. Size 1: Provide <**Insert number**> compartments with inside dimensions not less than 5 inches high by 12-1/2 inches wide by 15 inches deep.
   b. <**Insert compartment description**>.
5. Compartment Doors: Equip with lock and concealed, continuous hinge.
   a. Door Locks: Five-pin tumbler, cylinder [**cam**] [**spring-latch-type**] locks capable of at least 1000 key changes; with [**two**] [**three**] <**Insert number**> keys for each compartment door. Key each compartment differently.
   b. Door Locks: Three-digit, single-dial, combination locks with spring latch and automatic throw off. Set each compartment with different combination.
6. Concealed Components and Mounting Frames: Aluminum or steel sheet with manufacturer's standard finish.
7. Exposed Materials: Fabricated from steel sheet or aluminum with powder-coat finish.
8. Rack Ladders: Aluminum or steel with manufacturer's standard finish.
9. Powder-Coated Finish: [**Silver**] [**Silver with black trim**] [**Silver with slate trim**] [**Sandalwood with sand trim**] [**Color as indicated by manufacturer's designations**] [**Color as selected by Architect from manufacturer's full range**] <**Insert color**>.

2.5 ACCESSORIES

A. Directory for Mail Receptacles <**Insert drawing designation**>: Surface-mounted, front-opening unit, with clear glass or plastic window.
1. <Double click here to find, evaluate, and insert list of manufacturers and products.>
2. Framed, Top-Mount Unit for Horizontal Mail Receptacles: Fabricate directory as framed, horizontal unit with modular sections having a [**24-name capacity (3 modules)**] [**32-name capacity (4 modules)**] [**40-name capacity (5 modules)**]; of same material[**, size,**] and finish as adjacent mail receptacles; mounted above mail receptacles[**as indicated on Drawings**].

3. Framed, Side-Mount Unit for Horizontal Mail Receptacles: Fabricate directory as framed, horizontal unit with [**50-name capacity, 28 inches**] [**60-name capacity, 33-3/8 inches**] [**70-name capacity, 38-3/4 inches**] high; of same material and finish as adjacent mail receptacles; mounted at side of mail receptacles[**as indicated on Drawings**].
4. Framed, Side-Mount Unit for Vertical Mail Receptacles: Fabricate directory as framed, vertical unit with modular sections having a [**40-name capacity (1 module)**] [**80-name capacity (2 modules)**] [**120-name capacity (3 modules)**] [**160-name capacity (4 modules)**] [**200-name capacity (5 modules)**]; of same size, material, and finish as adjacent vertical mail compartment doors unless otherwise indicated.
5. Insert Units for Vertical Mail Receptacles: Fabricate directory as modular inserts having a [**40-name capacity (1 module)**] [**80-name capacity (2 modules)**] [**120-name capacity (3 modules)**] [**160-name capacity (4 modules)**] [**200-name capacity (5 modules)**]; of same size, material, and finish as adjacent vertical mail compartment doors unless otherwise indicated.
6. Provide name strips made of 1/4-inch-high, label tape.

B. Key Cabinet <**Insert drawing designation**>: Wall-mounted,[**metallic-coated**] steel cabinet with pivoting, key-holding panels and side-hinged door equipped with five-pin tumbler, cylinder door lock and concealed, full-length flush hinge. Finish cabinet, panels, and door with baked-enamel or powder-coated finish. Provide key control system consisting of key-holding hooks, labels, two sets of key tags with self-locking key holders, key-gathering envelopes, and temporary and permanent markers.
1. <Double click here to find, evaluate, and insert list of manufacturers and products.>
2. Capacity: Keys for [**150 percent of the number of**] <**Insert number**> mail-receptacle locks.
3. Cross-Index System: Consisting of index cards for recording key information. Include three receipt forms for each key-holding hook.
4. Baked-Enamel or Powder-Coated Finish: [**Color as indicated by manufacturer's designations**] [**Color as selected by Architect from manufacturer's full range**] <**Insert color**>.

C. Letter Drops (Through Wall) <**Insert drawing designation**>: Consisting of 11-inch-wide by 3-1/2-inch-high, top-hinged, spring-loaded flap that pivots inward, held in place by 1-inch-wide face frame. Fabricated from 1/4-inch-thick aluminum or steel, with exposed surfaces finished to match adjacent mail receptacles.
1. <Double click here to find, evaluate, and insert list of manufacturers and products.>
2. Sleeve: Provide[**metallic-coated**] steel wall sleeve for full depth of wall.
3. Finished Frame: Provide finished face frame on back side of wall opening.
4. Identification: Engrave face of swinging flap with 1-inch-high letters as follows: "[**LETTERS**] [**OUTGOING MAIL**] <**Insert text**>."
5. Exposed Material and Finish: [**Exposed surfaces fabricated from same material and finish as adjacent mail receptacles**] <**Insert material and finish**>.

D. Package Depository (Through Wall) <**Insert drawing designation**>: Consisting of 1/4-inch-thick, aluminum or steel faceplate and through-the-wall hopper door[**with hinged baffle**] allowing receipt of packages; fabricated from 1/4-inch-thick aluminum or steel.
1. <Double click here to find, evaluate, and insert list of manufacturers and products.>
2. Hopper Door: Equipped with door pull and concealed, full-length bottom hinge; with opening size [**not less than 15 inches wide by 6-1/2 inches high**] [**as indicated on Drawings**] <**Insert dimensions**>.

3. Sleeve: Provide[**metallic-coated**] steel wall sleeve for full depth of wall.
4. Slowdown: Provide steel slowdown ramp on back side of wall opening.
5. Identification: Engrave face of hopper door with 1-inch-high letters as follows: "[**LETTERS**] <**Insert text**>."
6. Finish: Exposed surfaces finished same as mail receptacles.
7. Aluminum Finish: Finish surfaces exposed to view as follows:
   a. Anodic Finish: [**Clear**] [**As indicated by manufacturer's designations**] [**As selected by Architect from manufacturer's full range**] <**Insert color**>.
   b. Baked-Enamel or Powder-Coated Finish: [**Dark bronze**] [**Gold**] [**Color as indicated by manufacturer's designations**] [**Color as selected by Architect from manufacturer's full range**] <**Insert color**>.
8. Steel Finish: Finish surfaces exposed to view with baked-enamel or powder-coated finish; [**color as indicated by manufacturer's designations**] [**color as selected by Architect from manufacturer's full range**] <**Insert color**>.

2.6 FABRICATION

A. Form postal specialties to required shapes and sizes, with true lines and angles, square, rigid, and without warp, and with metal faces flat and free of dents or distortion. Make exposed metal edges and corners free of sharp edges and burrs and safe to touch. Fabricate doors of postal specialties to preclude binding, warping, or misalignment.

B. Preassemble postal specialties in shop to greatest extent possible to minimize field assembly.

C. Mill joints to a tight, hairline fit. Cope or miter corner joints. Form joints exposed to weather to exclude water penetration.

D. Drill or punch holes required for fasteners and remove burrs. Use security fasteners where fasteners are exposed. If used, seal external rivets before finishing.

E. Weld in concealed locations to greatest extent possible without distorting or discoloring exposed surfaces. Remove weld spatter and welding oxides from exposed surfaces.

F. Fabricate tubular and channel frame assemblies with manufacturer's standard welded or mechanical joints. Provide subframes and reinforcement as required for a complete system to support loads.

G. Fabricate rack ladders to support indicated number of units to form a column of units.

H. Where dissimilar metals will contact each other, protect against galvanic action by painting contact surfaces with bituminous coating or by applying other permanent separation as recommended by manufacturers of dissimilar metals.

2.7 GENERAL FINISH REQUIREMENTS

A. Comply with NAAMM/NOMMA's "Metal Finishes Manual for Architectural and Metal Products (AMP 500-06)" for recommendations for applying and designating finishes.

B. Protect mechanical finishes on exposed surfaces from damage by applying a strippable, temporary protective covering before shipping.

C. Appearance of Finished Work: Noticeable variations in same piece are not acceptable. Variations in appearance of adjoining components are acceptable if they are within the range of approved Samples and are assembled or installed to minimize contrast.

PART 3 - EXECUTION

3.1 EXAMINATION

A. Examine substrates, areas, and conditions[**, with Installer present,**] for compliance with requirements for roughing-in openings, clearances, and other conditions affecting performance of the Work.

B. Examine walls and other adjacent construction for suitable conditions where units will be installed.

C. Prepare written report, endorsed by Installer, listing conditions detrimental to performance of the Work.

D. Proceed with installation only after unsatisfactory conditions have been corrected.

3.2 INSTALLATION

A. General: Install postal specialties level and plumb, according to manufacturer's written instructions and roughing-in drawings.
   1. Where dissimilar metals are in permanent contact with each other, protect against galvanic action by painting contact surfaces with bituminous coating or by applying other permanent separation as recommended by manufacturer for this purpose.
   2. Where aluminum contacts grout, concrete, masonry, or wood, protect against corrosion by painting contact surfaces with bituminous coating.

B. Horizontal Mail Receptacles: Install horizontal mail receptacles with center of tenant-door lock cylinders not more than 48 inches and bottom of receptacles not less than 15 inches above finished floor.
   1. Install removable-core and keyed-in door lock cylinders as required for each type of cylinder lock.
   2. Install and align two rack ladders for the first column of mail receptacles and one rack ladder for each additional adjacent column of mail receptacles.

C. Vertical Mail Receptacles: Install vertical mail receptacles with center of master lock cylinder not more than 48 inches and bottom of receptacles not less than 15 inches above finished floor.

D. Pedestal-Mounted Postal Specialties: Anchor units with 1/2-inch-diameter, [**galvanized**] [**stainless**]-steel anchor bolts with hooked ends.

E. Mail Collection Boxes: Install collection boxes with [**centerline of mail slots**] [**handle of hopper doors**] not more than 48 inches above finished floor.

F. Freestanding Data Distribution Boxes: Locate freestanding data distribution boxes at locations indicated[**or, if not indicated, as directed by Architect**].

G. Rack-Ladder Data Distribution Boxes: Install and align two rack ladders for the first column of data distribution boxes and one rack ladder for each additional adjacent column of data distribution boxes.

3.3 ADJUSTING, CLEANING, AND PROTECTION

A. Remove temporary protective coverings and strippable films, if any, as postal specialties are installed unless otherwise indicated in manufacturer's written installation instructions.

B. Adjust doors, hardware, and moving parts to function smoothly, and lubricate as recommended by manufacturer. Verify that integral locking devices operate properly.

C. Touch up marred finishes or replace postal specialties that cannot be restored to factory-finished appearance. Use only materials and procedures recommended or furnished by postal-specialty manufacturer.

D. Replace postal specialties that have been damaged or have deteriorated beyond successful repair by finish touchup or similar minor repair procedures.

E. On completion of postal-specialty installation, clean interior and exterior surfaces as recommended by manufacturer.

END OF SECTION 105500.16

SECTION 10 73 10 – PROTECTIVE COVERS

PART 1 - GENERAL

1.1 SECTION INCLUDES

A. Design and installation of extruded aluminum walkway covers and canopies.

1.2 RELATED WORK

A. Concrete.

B. Sealants.

1.3 REFERENCES

A. The Aluminum Association – Aluminum Design Manual 2010.

B. American Welding Society – AWS D1.2/D1.2M: 2008.

1.4 SUBMITTALS

A. Manufacturer's brochures, manuals and literature.

B. Shop drawings of the complete canopy layout, includes sections and details specific to project and bearing the seal of a registered structural engineer.

C. Samples of canopy finishes.

PART 2 - PRODUCTS

2.1 MANUFACTURER

A. AVAdek Walkway Covers and Canopies.

2.2 MATERIALS

A. All components shall be 6063; 6061 or 6005 alloy extruded aluminum.

B. Components shall be sized to comply with live load and wind load requirements of the project and shall not be less than the dimensions shown on the plan.

C. The thickness of the aluminum deck panels shall be at least .080” thick.

D. All columns shall have radius corners.

E. Beams are open at top to drain canopy system internally into columns.

F. Flashing shall be .040” thick.

G. All bolts and fasteners shall be stainless steel or finished to match adjacent components and sized by canopy engineer.

2.3 FINISHES

A. The finish and color selection of each component shall be chosen from the manufacturer’s standard color selections and shall include:
   1. Polyester Baked Enamel.
   2. Fluoropolymer.
   3. Anodized-Clear, Bronze & Champagne.

PART 3 - EXECUTION

3.1 FABRICATION

A. All welding shall be in compliance with AWS 1.2. The certification of each welder shall be available to verify compliance.

B. Canopy shall be designed to drain through beams to columns with water tight connections.

3.2 INSTALLATION

A. Install the canopy in strict accordance with the manufacturer’s recommendations.

B. Erect canopy after concrete and masonry with in vicinity is completed and washed down.

C. Install columns and beans straight and true.

D. Install raincaps over draining sections of the deck.

E. The general contractor shall finish the concrete around the columns to assure a uniform quality of workmanship and appearance with the adjacent surrounding concrete work.

F. Fill downspout columns with grout to the discharge level to prevent standing water.

G. Install flashing as required.

H. Care shall be taken to prevent damage or scratching during installation.

I. Thoroughly clean canopy after installation.

END OF SECTION 10 73 10

SECTION 10 75 16 - GROUND-SET FLAGPOLES

PART 1 - GENERAL

1.1 SUMMARY

A. Section includes ground-set flagpoles made from aluminum.

1.2 ACTION SUBMITTALS

A. Product Data: For each type of product.
   1. Include construction details, material descriptions, dimensions of individual components and profiles, operating characteristics, fittings, accessories, and finishes for flagpoles.

B. Delegated-Design Submittal: For flagpoles.

1.3 CLOSEOUT SUBMITTALS

A. Operation and Maintenance Data: For flagpoles to include in operation and maintenance manuals.

PART 2 - PRODUCTS

2.1 MANUFACTURERS

A. Source Limitations: Obtain flagpoles as complete units, including fittings, accessories, bases, and anchorage devices, from single source from single manufacturer.

2.2 PERFORMANCE REQUIREMENTS

A. Delegated Design: Engage a qualified professional engineer, as defined in Section 014000 "Quality Requirements," to design flagpole assemblies.

B. Structural Performance: Flagpole assemblies, including anchorages and supports, shall withstand design loads indicated within limits and under conditions indicated.
   1. Wind Loads: Determine according to NAAMM FP 1001. Basic wind speed for Project location is 120+.

2.3 ALUMINUM FLAGPOLES

A. Aluminum Flagpoles: Cone-tapered flagpoles fabricated from seamless extruded tubing complying with ASTM B 241/B 241M, Alloy 6063, with a minimum wall thickness of 3/16 inch.
   1. Basis of Design: Concord Industries, Inc. for Ground-Set Flagpoles or Architects approved equal.

B. Exposed Height: 25 feet.

C. Metal Foundation Tube: Manufacturer's standard corrugated-steel foundation tube, 0.060-inch wall thickness with 3/16-inch steel bottom plate and support plate; 3/4-inch-diameter, steel ground spike; and steel centering wedges welded together. Galvanize foundation tube after assembly. Furnish loose hardwood wedges at top of foundation tube for plumbing pole.

D. Sleeve for Aluminum Flagpole: foundation sleeve, made to fit flagpole, for casting into concrete foundation.

2.4 FITTINGS

A. Finial Ball: Flush-seam ball, sized as indicated or, if not indicated, to match flagpole-butt diameter.
   1. 0.063-inch spun aluminum, finished to match flagpole.

B. External Halyard: Ball-bearing, nonfouling, revolving truck assembly of cast metal with continuous 5/16-inch-diameter, braided polypropylene halyard and 9-inch cast-metal cleats with fasteners. Finish exposed metal surfaces to match flagpole.
   1. Halyards and Cleats: One at each flagpole.
   2. Halyard Flag Snaps: Stainless-steel swivel snap hooks with neoprene or vinyl covers. Furnish two per halyard.

2.5 MISCELLANEOUS MATERIALS

A. Drainage Material: Crushed stone, or crushed or uncrushed gravel; coarse aggregate.

B. Sand: ASTM C 33/C 33M, fine aggregate.

C. Elastomeric Joint Sealant: Single-component neutral-curing silicone joint sealant complying with requirements in Section 079200 "Joint Sealants."

D. Bituminous Paint: Cold-applied asphalt emulsion complying with ASTM D 1187/D 1187M.

2.6 ALUMINUM FINISHES

A. Natural Satin Finish: AA-M32, fine, directional, medium satin polish; buff complying with AA-M20; seal aluminum surfaces with clear, hard-coat wax.

B. Clear Anodic Finish: AAMA 611, AA-M12C22A41.

PART 3 - EXECUTION

3.1 PREPARATION

A. Prepare uncoated metal flagpoles that are set in foundation tubes by painting below-grade portions with a heavy coat of bituminous paint.

B. Foundation Excavation: Excavate to neat clean lines in undisturbed soil. Remove loose soil and foreign matter from excavation and moisten earth before placing concrete. Place and compact drainage material at excavation bottom.

C. Foundation Tube: Place foundation tube, center, and brace to prevent displacement during concreting. Place concrete. Plumb and level foundation tube and allow concrete to cure.

D. Sleeves: Locate and secure sleeves in forms by bracing to reinforcement and forms.

E. Place concrete, as specified in Section 033000 "Cast-in-Place Concrete." Compact concrete in place by using vibrators. Moist-cure exposed concrete for no fewer than seven days or use nonstaining curing compound.

F. Trowel exposed concrete surfaces to a smooth, dense finish, free of trowel marks, and uniform in texture and appearance. Provide positive slope for water runoff to perimeter of concrete base.

3.2 FLAGPOLE INSTALLATION

A. General: Install flagpoles where indicated and according to[Shop Drawings and] manufacturer's written instructions.

B. Foundation Tube: Place flagpole in tube, seated on bottom plate between steel centering wedges, and install hardwood wedges to secure flagpole in place. Place and compact sand in foundation tube and remove hardwood wedges. Seal top of foundation tube with a 2-inch layer of elastomeric joint sealant and cover with flashing collar.

END OF SECTION 107516

SECTION 12 24 13 - ROLLER WINDOW SHADES

PART 1 - GENERAL

1.1 SUMMARY

A. Section Includes:
   1. Manually operated roller shades with single rollers.
   2. Motor-operated roller shades with single rollers.

1.2 ACTION SUBMITTALS

A. Product Data: For each type of product.

B. Shop Drawings: Show fabrication and installation details for roller shades, including shadeband materials, their orientation to rollers, and their seam and batten locations.
   1. Motor-Operated Shades: Include details of installation and diagrams for power, signal, and control wiring.

C. Samples: For each exposed product and for each color and texture specified.

1.3 INFORMATIONAL SUBMITTALS

A. Product certificates.

B. Product test reports.

1.4 CLOSEOUT SUBMITTALS

A. Operation and maintenance data.

1.5 QUALITY ASSURANCE

A. Installer Qualifications: Fabricator of products.

PART 2 - PRODUCTS

2.1 MANUFACTURERS

A. Source Limitations: Obtain roller shades from single source from single manufacturer.

2.2 MANUALLY OPERATED SHADES WITH SINGLE ROLLERS

A. Basis of Design: Mechoshade, Mecho 5 Slimline Pocket or Architects approved equal.

B. Chain-and-Clutch Operating Mechanisms: With continuous-loop bead chain and clutch that stops shade movement when bead chain is released; permanently adjusted and lubricated.
   1. Chain-Retainer Type: Clip, jamb mount.
   2. Spring Lift-Assist Mechanisms: Provide for shadebands that weigh more than 10 lb or for shades as recommended by manufacturer, whichever criterion is more stringent.

C. Rollers: Corrosion-resistant steel or extruded-aluminum tubes of diameters and wall thicknesses required to accommodate operating mechanisms and weights and widths of shadebands indicated without deflection. Provide with permanently lubricated drive-end assemblies and idle-end assemblies designed to facilitate removal of shadebands for service.
   1. Roller Drive-End Location: As indicated on Drawings.
   2. Direction of Shadeband Roll: Regular, from back (exterior face) of roller.

D. Mounting Hardware: Brackets or endcaps, corrosion resistant and compatible with roller assembly, operating mechanism, installation accessories, and mounting location and conditions indicated.

E. Roller-Coupling Assemblies: Coordinated with operating mechanism and designed to join up to three inline rollers into a multiband shade that is operated by one roller drive-end assembly.

F. Shadebands:
   1. Shadeband Material: Light-blocking fabric.
   2. Shadeband Bottom (Hem) Bar: Steel or extruded aluminum.
      a. Type: Exposed with endcaps and integral light seal at bottom where it meets the sill.
      b. Color and Finish: As selected by Architect from manufacturer's full range.

G. Installation Accessories:
   1. Recessed Shade Pocket: Rectangular, extruded-aluminum enclosure designed for recessed ceiling installation; with front, top, and back formed as one piece, end plates, and removable bottom closure panel.
   2. Installation Accessories Color and Finish: As selected from manufacturer's full range.

2.3 MOTOR-OPERATED, SINGLE-ROLLER SHADES

A. Basis of Design: Mecho Shade, Mecho 5 Slimline Pocket, or Architects approved equal.

B. Motorized Operating System: Provide factory-assembled, shade-operator system of size and capacity and with features, characteristics, and accessories suitable for conditions indicated. Coordinate operator wiring requirements and electrical characteristics with building electrical system.
   1. Electrical Components: Listed and labeled as defined in NFPA 70, by a qualified testing agency, and marked for intended location and application.

2. Electric Motor: Manufacturer's standard tubular, enclosed in roller.
   a. Electrical Characteristics: 110-V ac.
   b. Maximum Total Shade Width: As required to operate roller shades indicated.
   c. Maximum Shade Drop: As required to operate roller shades indicated.
   d. Maximum Weight Capacity: As required to operate roller shades indicated.
3. Remote Control: Individual wall-switch control station.
4. Crank-Operator Override: Crank and gearbox operate shades in event of power outage or motor failure.
5. Limit Switches: Adjustable switches interlocked with motor controls and set to stop shades automatically at fully raised and fully lowered positions.

C. Rollers: Corrosion-resistant steel or extruded-aluminum tubes of diameters and wall thicknesses required to accommodate operating mechanisms and weights and widths of shadebands indicated without deflection. Provide with permanently lubricated drive-end assemblies and idle-end assemblies designed to facilitate removal of shadebands for service.
   1. Roller Drive-End Location: As indicated on Drawings.
   2. Direction of Shadeband Roll: Regular, from back (exterior face) of roller.

D. Mounting Hardware: Brackets or endcaps, corrosion resistant and compatible with roller assembly, operating mechanism, installation accessories, and mounting location and conditions indicated.

E. Roller-Coupling Assemblies: Coordinated with operating mechanism and designed to join up to three inline rollers that are operated by one roller drive-end assembly.

F. Shadebands:
   1. Shadeband Material: Light-blocking fabric.
   2. Shadeband Bottom (Hem) Bar: Steel or extruded aluminum.
      a. Type: Exposed with endcaps and integral light seal at bottom where it meets the sill.
      b. Color and Finish: As selected by Architect from manufacturer's full range.

G. Installation Accessories:
   1. Recessed Shade Pocket: Rectangular, extruded-aluminum enclosure designed for recessed ceiling installation; with front, top, and back formed as one piece, end plates, and removable bottom closure panel.
   2. Installation Accessories Color and Finish: As selected from manufacturer's full range.

2.4 SHADEBAND MATERIALS

A. Shadeband Material Flame-Resistance Rating: Comply with NFPA 701. Testing by a qualified testing agency. Identify products with appropriate markings of applicable testing agency.

B. Light-Blocking Fabric: Opaque fabric, stain and fade resistant.
   1. Basis of Design: Mermet Sun Control Fabric as indicated or Architects approved equal.

2.5 ROLLER SHADE FABRICATION

A. Product Safety Standard: Fabricate roller shades to comply with WCMA A 100.1

B. Unit Sizes: Fabricate units in sizes to fill window and other openings as follows, measured at 74 deg F:
   1. Between (Inside) Jamb Installation: Width equal to jamb-to-jamb dimension of opening in which shade is installed less 1/4 inch per side or 1/2-inch total, plus or minus 1/8 inch. Length equal to head-to-sill or -floor dimension of opening in which shade is installed less 1/4 inch, plus or minus 1/8 inch.
   2. Outside of Jamb Installation: Width and length as indicated, with terminations between shades of end-to-end installations at centerlines of mullion or other defined vertical separations between openings.

C. Shadeband Fabrication: Fabricate shadebands without battens or seams to extent possible, except as follows:
   1. Vertical Shades: Where width-to-length ratio of shadeband is equal to or greater than 1:4, provide battens and seams at uniform spacings along shadeband length to ensure shadeband tracking and alignment through its full range of movement without distortion of the material.

PART 3 - EXECUTION

3.1 ROLLER SHADE INSTALLATION

A. Install roller shades level, plumb, and aligned with adjacent units according to manufacturer's written instructions.
   1. Opaque Shadebands: Located so shadeband is not closer than 2 inches to interior face of glass. Allow clearances for window operation hardware.

B. Electrical Connections: Connect motor-operated roller shades to building electrical system.

C. Adjust and balance roller shades to operate smoothly, easily, safely, and free from binding or malfunction throughout entire operational range.

D. Clean roller shade surfaces, after installation, according to manufacturer's written instructions.

E. Replace damaged roller shades that cannot be repaired, in a manner approved by Architect, before time of Substantial Completion.

END OF SECTION 122413

SECTION 12 36 61.16 - SOLID SURFACING COUNTERTOPS

PART 1 - GENERAL

1.1 SUMMARY

A. Section Includes:
   1. Solid surface material countertops.
   2. Solid surface material backsplashes.
   3. Solid surface material end splashes.

1.2 ACTION SUBMITTALS

A. Product Data: For countertop materials and splashes.

B. Shop Drawings: For countertops. Show materials, finishes, edge and backsplash profiles, methods of joining, and cutouts for plumbing fixtures.

C. Samples: For each type of material exposed to view.

PART 2 - PRODUCTS

2.1 SOLID SURFACE COUNTERTOP MATERIALS

A. Solid Surface Material: Homogeneous-filled plastic resin complying with ICPA SS-1.
   1. Basis of Design: Okite for solid surfacing or Architects approved equal.
   2. Type: Provide Standard type unless Special Purpose type is indicated.
   3. Colors and Patterns: As indicated by manufacturer's designations.

2.2 COUNTERTOP FABRICATION

A. Fabricate countertops according to solid surface material manufacturer's written instructions and to the AWI/AWMAC/WI's "Architectural Woodwork Standards."
   1. Grade: Premium.

B. Configuration:
   1. Front: Straight, slightly eased at top.
   2. Backsplash: Straight, slightly eased at corner.
   3. End Splash: Matching backsplash.

C. Countertops: 3/4-inch-thick, solid surface material.

D. Backsplashes: 1/2-inch-thick, solid surface material.

E. Joints: Fabricate countertops without joints.

F. Cutouts and Holes:
   1. Undercounter Plumbing Fixtures: Make cutouts for fixtures in shop using template or pattern furnished by fixture manufacturer. Form cutouts to smooth, even curves.

2.3 INSTALLATION MATERIALS

A. Adhesive: Product recommended by solid surface material manufacturer.

B. Sealant for Countertops: Comply with applicable requirements in Section 079200 "Joint Sealants."

PART 3 - EXECUTION

3.1 INSTALLATION

A. Fasten countertops by screwing through corner blocks of base units into underside of countertop. Predrill holes for screws as recommended by manufacturer.

B. Fasten subtops to cabinets by screwing through subtops into cornerblocks of base cabinets. Shim as needed to align subtops in a level plane.

C. Bond joints with adhesive and draw tight as countertops are set. Mask areas of countertops adjacent to joints to prevent adhesive smears.

D. Install backsplashes and end splashes by adhering to wall and countertops with adhesive.

E. Complete cutouts not finished in shop. Mask areas of countertops adjacent to cutouts to prevent damage while cutting. Make cutouts to accurately fit items to be installed, and at right angles to finished surfaces unless beveling is required for clearance. Ease edges slightly to prevent snipping.

F. Apply sealant to gaps at walls; comply with Section 079200 "Joint Sealants."

END OF SECTION 123661.16

SECTION 124813 - ENTRANCE FLOOR MATS AND FRAMES

PART 1 - GENERAL

1.1 SUMMARY

A. Section Includes:
   1. Floor mats and frame assemblies.

1.2 ACTION SUBMITTALS

A. Product Data: For each type of product.
   1. Include construction details, material descriptions, dimensions of individual components and profiles, and finishes for floor mats and frames.

B. Shop Drawings:
   1. Shop Drawings in sufficient detail showing layout of mat and frame specified including details indicating construction relative to materials direction of traffic, spline locations, profiles, anchors and accessories.

C. Samples: For the following products, in manufacturer's standard sizes:
   1. Floor Mat: Assembled sections of floor mat.
   2. Tread Rail: Sample of each type and color.
   3. Frame Members: Sample of each type and color.

1.3 CLOSEOUT SUBMITTALS

A. Maintenance Data: For floor mats and frames to include in maintenance manuals.

PART 2 - PRODUCTS

2.1 ENTRANCE FLOOR MATS AND FRAMES, GENERAL

A. Structural Performance: Provide roll-up rail mats and frames capable of withstanding the following loads and stresses within limits and under conditions indicated:
   1. Wheel load of 350 lb per wheel.

B. Regulatory Requirements: Comply with applicable provisions in the U.S. Architectural & Transportation Barriers Compliance Board's ADA-ABA Accessibility Guidelines for Buildings and Facilities and ICC A117.1.

2.2 ROLL-UP RAIL MATS

A. Basis-of-Design: Construction Specialties; M1 Pedimat entrance floor mats and frames or Architects approved equal.

B. Roll-up, Hinged Mats:
   1. Floor mats: exposed hinge rail connectors shall be extruded 6063-T6 aluminum. Complete with perforations for drainage. Tread rails shall be manufactured from high-impact Regrind PET-G complete with co-extruded soft-durometer cushions. Supplied in mill standard finish.
   2. Level Mat Base Frames: Shall be a ¾” deep recessed frame in 6063-T5 aluminum alloy with ¼” wide exposed surface. Black EPDM trim fillers shall be furnished as required when standard 2” tread spacing cannot be maintained. Frame color shall be supplied in mill (standard) finish.
   3. Carpet Trend Inserts: Shall meet CRI standard for good indoor air quality. Fibers shall include a minimum of 100, 12 mil monofilament fibers per square inch. Each carpet fiber and monofilament shall be fusion-bonded to a rigid two-ply backing to prevent fraying and supplied in continuous splice-free length. Anti-static carpet fibers shall contain antimicrobial additive and be treated with Scotchgard® to reduce soiling. Carpet weight shall be 33-oz./yd^2.
   4. Color, textures and patterns of inserts: as selected by Architect from full range of colors.

2.3 CONCRETE FILL AND GROUT MATERIALS

A. Provide concrete fill and grout equivalent in strength to cast-in-place concrete slabs for recessed mats and frames. Use aggregate no larger than one-third fill thickness.

2.4 FABRICATION

A. Floor Mats: Shop fabricate units to greatest extent possible in sizes indicated. Unless otherwise indicated, provide single unit for each mat installation; do not exceed manufacturer's recommended maximum sizes for units that are removed for maintenance and cleaning. Where joints in mats are necessary, space symmetrically and away from normal traffic lanes. Miter corner joints in framing elements with hairline joints or provide prefabricated corner units without joints.

B. Recessed Frames: As indicated, for permanent recessed installation, complete with corner pins or reinforcement and anchorage devices.
   1. Fabricate edge-frame members in single lengths or, where frame dimensions exceed maximum available lengths, provide minimum number of pieces possible, with hairline joints equally spaced and pieces spliced together by straight connecting pins.

C. Coat concealed surfaces of aluminum frames that contact cementitious material with manufacturer's standard protective coating.

PART 3 - EXECUTION

3.1 EXAMINATION

A. Examine substrates and floor conditions for compliance with requirements for location, sizes, minimum recess depth, and other conditions affecting installation of floor mats and frames.

B. Proceed with installation only after unsatisfactory conditions have been corrected.

3.2 INSTALLATION

A. Install recessed mat frames to comply with manufacturer's written instructions. Set mat tops at height recommended by manufacturer for most effective cleaning action; coordinate tops of mat surfaces with bottoms of doors that swing across mats to provide clearance between door and mat.
   1. Install necessary shims, spacers, and anchorages for proper location, and secure attachment of frames.
   2. Install grout and fill around frames and, if required to set mat tops at proper elevations, in recesses under mats. Finish grout and fill smooth and level.

3.3 PROTECTION

A. After completing frame installation and concrete work, provide temporary filler of plywood or fiberboard in recesses and cover frames with plywood protective flooring. Maintain protection until construction traffic has ended and Project is near Substantial Completion.

END OF SECTION 124813

SECTION 12 48 16 - ENTRANCE FLOOR GRILLES

PART 1 - GENERAL

1.1 RELATED DOCUMENTS

A. Drawings and general provisions of the Contract, including General and Supplementary Conditions and Division 01 Specification Sections, apply to this Section.

1.2 SUMMARY

A. Section includes recessed floor grilles and frames.

1.3 COORDINATION

A. Coordinate size and location of recesses in concrete to receive floor grilles and frames.

1.4 ACTION SUBMITTALS

A. Product Data: For each type of product.
   1. Include construction details, material descriptions, dimensions of individual components and profiles, and finishes for entrance floor grilles and foot grilles.

B. Shop Drawings:
   1. Items penetrating floor grilles and frames, including door control devices.
   2. Divisions between grille sections.
   3. Perimeter floor moldings.

C. Samples: For the following products, in manufacturer's standard sizes:
   1. Floor Grille: Assembled section of floor grille.
   2. Frame Members: Sample of each type and color.

1.5 CLOSEOUT SUBMITTALS

A. Maintenance Data: For floor grilles and frames to include in maintenance manuals.

1.6 FIELD CONDITIONS

A. Field Measurements: Indicate measurements on Shop Drawings.

PART 2 - PRODUCTS

2.1 MANUFACTURERS

A. <Double click here to find, evaluate, and insert list of manufacturers and products.>

2.2 ENTRANCE FLOOR GRILLES, GENERAL

A. Structural Performance: Provide floor grilles and frames capable of withstanding the following loads and stresses:
   1. Uniform floor load of [**300 lbf/sq. ft.**] <**Insert value**>.
   2. Wheel load of [**350 lb**] <**Insert value**> per wheel.

B. Regulatory Requirements: Comply with applicable provisions in 2012 Texas Accessibility Standards.

2.3 FLOOR GRILLES

A. General: Provide manufacturer's standard floor-grille assemblies consisting of treads of type and profile indicated, interlocked or joined together by cross members, and with support legs (if any) and other components needed to produce a complete installation.

B. **Aluminum** Floor Grilles: Provide manufacturer's standard floor grilles with extruded members, top-surfaced tread rails, and as follows:
   1. Tread Rails: Extruded-**aluminum** tread rails.
      a. Aluminum Color: **Mill finish Clear** [**Black**] [**Match Architect's sample**] [**As selected by Architect from full range of industry colors and color densities**].
   2. Tread Rail Spacing: [**1-1/2 inches o.c. with 1/8- to 3/16-inch-**] [**2 inches o.c. with 1/4-inch-**] <**Insert dimensions**> wide openings between treads.
   3. Top Surface: **Serrated aluminum** [**Serrated vinyl cap with UV stabilizer and antifungal additive**] [**Textured-surface, resilient vinyl insert**] [**Aluminum-oxide or silicon-carbide grit in epoxy matrix**] [**Abrasive particles bonded to or imbedded in vinyl insert**] [**Fusion-bonded, level-cut-pile nylon carpet insert; 1/4 inch high, 28 oz./sq. yd.**].
      a. Top Surface Color: [**Match tread rail**] [**As indicated by manufacturer's designations**] [**Match Architect's sample**] [**As selected by Architect from manufacturer's full range of industry colors**].
   4. Grille Size: [**As indicated**] <**Insert size**>.

C. Stainless-Steel Floor Grille: Type 304.
   1. Surface Treads: [**0.071-by-0.177-inch wire with 0.125-inch-**] [**0.090-by-0.172-inch wire with 0.145-inch-**] [**0.093-by-0.156-inch wire with 0.125-inch-**] wide openings between wires.
   2. Support Rods: Spaced 1 inch o.c., welded to each wire.
   3. Mat Grating: 5/8 inch deep.
   4. Pit Grating: 1-1/8 inches deep.
   5. Stainless-Steel Finish: [**Mill**] [**No. 4**].

6. Grille Size: [**As indicated**] <**Insert size**>.

D. PVC Floor Grille: 1/8-by-1-1/2-by-1-inch ribbed top, PVC tread bars joined with 3/8-inch stainless-steel rods with 1-1/16-inch-long nylon spacers at 12 inches o.c. Provide PVC frame with nylon anchors.
   1. Colors: [**As indicated by manufacturer's designations**] [**Match Architect's sample**] [**As selected by Architect from full range of industry colors**].
   2. Grille Size: [**As indicated**] <**Insert size**>.

E. Lockdown: [**Manufacturer's standard**] [**Hidden**] [**In view**].

2.4 FRAMES

A. Provide manufacturer's standard frames of size and style for grille type, for permanent recessed installation in subfloor, complete with installation anchorages and accessories. Unless otherwise indicated, fabricate frame of same material and finish as grilles.

2.5 SUPPORT SYSTEM

A. Level Bed Applications: Provide manufacturer's standard, vinyl cushion support system.

B. Drainage Pit Applications: Provide manufacturer's special deep-pit frame and support extrusion system with intermediate support beams, sized and spaced as recommended by manufacturer for indicated spans and equipped with vinyl support cushions.

2.6 DRAIN PANS

A. Provide manufacturer's standard[**, 0.060-inch-thick**], [**metallic-coated steel**] [**aluminum**] [**or**] [**stainless-steel**] sheet drain pan with NPS 2 drain outlet for each floor-grille unit. Coat bottom of pan with protective coating recommended by manufacturer.

2.7 MATERIALS

A. Metallic-Coated Steel Sheet: ASTM A 653/A 653M, Commercial Steel (CS), Type B, with A60 zinc-iron-alloy (galvannealed) coating or with G60 mill-phosphatized zinc coating; stretcher-leveled standard of flatness; with minimum thickness indicated representing specified thickness according to ASTM A 924/A 924M.

B. Stainless-Steel Sheet, Strip, Plate, and Flat Bars: ASTM A 666, Type 304.

C. Aluminum Sheet: ASTM B 209, alloy and temper recommended by aluminum producer and finisher for type of use and finish indicated, and with not less than strength and durability properties of Alloy 5005-H15.

D. Extruded Aluminum: ASTM B 221, Alloy 6061-T6 or Alloy 6063-T5, T6, or T52 as standard with manufacturer. Coat surface of frame in contact with cementitious materials with manufacturer's standard protective coating.

E. Stainless-Steel Angles: ASTM A 276 or ASTM A 479/A 479M, corrosion resistant, Type 304.

2.8 FABRICATION

A. Shop fabricate floor grilles to greatest extent possible in sizes as indicated. Unless otherwise indicated, provide each grille as a single unit; do not exceed manufacturer's recommended maximum sizes for units that are removed for maintenance and cleaning. Where joints in grilles are necessary, space symmetrically and away from normal traffic lanes.

B. Fabricate frame members in single lengths or, where frame dimensions exceed maximum available lengths, provide minimum number of pieces possible, with hairline joints equally spaced and pieces spliced together by straight connecting pins.

2.9 ALUMINUM FINISHES

A. Mill finish.

B. Clear Anodic Finish: AAMA 611, [**AA-M12C22A41, Class I, 0.018 mm**] [**AA-M12C22A31, Class II, 0.010 mm**] or thicker.

C. Color Anodic Finish: AAMA 611, [**AA-M12C22A42/A44, Class I, 0.018 mm**] [**AA-M12C22A32/A34, Class II, 0.010 mm**] or thicker.

2.10 STAINLESS-STEEL FINISHES

A. Mill finish.

B. Directional Satin Finish: No. 4.
   1. When polishing is completed, passivate and rinse surfaces. Remove embedded foreign matter and leave surfaces chemically clean.

PART 3 - EXECUTION

3.1 EXAMINATION

A. Examine substrates and floor conditions for compliance with requirements for location, size, minimum recess depth, and other conditions affecting installation of floor grilles and frames.

B. Examine roughing-in for drainage piping systems to verify actual locations of piping connections before floor grille and frame and drain pan installation.

C. Proceed with installation only after unsatisfactory conditions have been corrected.

3.2 INSTALLATION

A. Install recessed floor grilles and frames[**and drain pans**] to comply with manufacturer's written instructions at locations indicated and with top of floor grilles and frames in relationship to one another and to adjoining finished flooring as recommended by manufacturer. Set floor-grille tops at height for most effective cleaning action.[**Coordinate top of floor-grille surfaces with doors that swing across grilles to provide clearance under door.**]

3.3 PROTECTION

A. After completing frame installations, provide temporary filler of plywood or fiberboard in floor-grille recesses and cover frames with plywood protective flooring. Maintain protection until construction traffic has ended and Project is near Substantial Completion.

END OF SECTION 124816

SECTION 21 1300 - FIRE SUPPRESSION SPRINKLERS

PART 1 GENERAL

1.1 QUALITY ASSURANCE

A. Conform to UL requirements.

PART 2 PRODUCTS

2.1 PIPING MATERIALS

A. Comply with requirements in" PIPING SCHEDULE" Article for applications of pipe, tube, and fitting materials, and for joining methods for specific services, service locations, and pipe sizes.

2.2 STEEL PIPE AND FITTINGS

A. Schedule 30, Galvanized and Black Steel Pipe: ASTM A 135; ASTM A 795/A 795M, Type E; or ASME B36.10M, wrought steel; with wall thickness not less than Schedule 30 and not more than Schedule 40. Pipe ends may be factory or field formed to match joining method.

2.3 PIPE JOINING MATERIALS

2.4 SPRINKLERS

A. Suspended Ceiling Type: Semi-recessed pendant type with matching push on escutcheon plate.
   1. Response Type: Quick.
   2. Coverage Type: Standard.
   3. Finish: Brass.
   4. Escutcheon Plate Finish: Enamel, color White.
   5. Fusible Link: Fusible solder link type temperature rated for specific area hazard.

B. Exposed Area Type: Pendant type with guard.
   1. Response Type: Quick.
   2. Coverage Type: Standard.
   3. Finish: Brass.
   4. Fusible Link: Fusible solder link type temperature rated for specific area hazard.

C. Sidewall Type: Semi-recessed horizontal sidewall type with matching push on escutcheon plate.
   1. Response Type: Quick.
   2. Coverage Type: Standard.
   3. Finish: Brass.
   4. Escutcheon Plate Finish: Brass.
   5. Fusible Link: Fusible solder link type temperature rated for specific area hazard.

D. Storage Sprinklers: Pendant type with guard.
   1. Response Type: Standard.
   2. Coverage Type: Standard.
   3. Finish: Chrome plated.
   4. Fusible Link: Fusible solder link type temperature rated for specific area hazard.

E. Guards: Finish to match sprinkler finish.

2.5 PIPING SPECIALTIES

A. Wet Pipe Sprinkler Alarm Valve: Check type valve with divided seat ring, rubber faced clapper to automatically actuate water motor alarm, pressure retard chamber and variable pressure trim with the following additional capabilities and features:

B. Backflow Preventer: Reduced pressure principle valve assembly backflow preventer with drain and OS & Y gate valve on each end.

C. Test Connections:

2.6 ALARM DEVICES

A. Water Motor Alarm: Hydraulically operated impeller type alarm with aluminum alloy chrome plated gong and motor housing, nylon bearings, and inlet strainer.

B. Electric Alarm: Electrically operated chrome plated gong with pressure alarm switch.

C. Water Flow Switch: Electrically supervised, vane type switch for mounting horizontal or vertical, with two contacts; rated 7 amp at 125 volt AC and 0.25 amp at 24 volt DC.

D. Indicator-Post Supervisory Switches
   1.

E. Pressure Switches

F. Fire Department Connections:
   1. Type: Flush mounted wall type with brass finish.
   2. Outlets: Two way with thread size to suit fire department hardware; threaded dust cap and chain of matching material and finish.
   3. Drain: 3/4 inch automatic drip, outside.
   4. Label: "Sprinkler - Fire Department Connection".

2.7 MANUAL CONTROL STATIONS

2.8 CONTROL PA\NELS

2.9 PRESSURE GAUGES

A.

PART 3 EXECUTION

3.1 PREPARATION

3.2 INSTALLATION

A. Install in accordance with referenced NFPA design and installation standard.

B. Install equipment in accordance with manufacturer's instructions.

C. Flush entire piping system of foreign matter.

D. Hydrostatically test entire system.

E. Require test be witnessed by Fire Marshal.

END OF SECTION

SECTION 22 1005 - PLUMBING PIPING

PART 1 GENERAL

1.1 SUBMITTALS

A. Product Data: Provide data on pipe materials, pipe fittings, valves, and accessories. Provide manufacturers catalog information. Indicate valve data and ratings.

PART 2 PRODUCTS

2.1 GENERAL REQUIREMENTS

A. Potable Water Supply Systems: Provide piping, pipe fittings, and solder and flux (if used), that comply with NSF 61 and NSF 372 for maximum lead content; label pipe and fittings.

2.2 SANITARY SEWER PIPING, BURIED WITHIN 5 FEET OF BUILDING

A. PVC Pipe: ASTM D2665 or ASTM D3034.
   1. Fittings: PVC.
   2. Joints: Solvent welded, with ASTM D2564 solvent cement.

2.3 SANITARY SEWER PIPING, ABOVE GRADE

A. Cast Iron Pipe: CISPI 301, hubless, service weight.
   1. Fittings: Cast iron.
   2. Joints: CISPI 310, neoprene gaskets and four (4) stainless steel clamp-and-shield assemblies.

2.4 WATER PIPING, BURIED WITHIN 5 FEET OF BUILDING

2.5 WATER PIPING, ABOVE GRADE

A. Copper Tube: ASTM B88 (ASTM B88M), Type L (B), Drawn (H).
   1. Fittings: ASME B16.18, cast copper alloy or ASME B16.22, wrought copper and bronze.
   2. Joints: ASTM B32, alloy Sn95 solder.

2.6 STORM WATER PIPING, BURIED WITHIN 5 FEET OF BUILDING

A. Cast Iron Pipe: ASTM A74 service weight.
   1. Fittings: Cast iron.
   2. Joint Seals: ASTM C564 neoprene gaskets.

2.7 STORM WATER PIPING, ABOVE GRADE

A. Cast Iron Pipe: CISPI 301, hubless, service weight.
   1. Fittings: Cast iron.
   2. Joints: Neoprene gaskets and four (4) stainless steel clamp-and-shield assemblies.

2.8 NATURAL GAS PIPING, BURIED WITHIN 5 FEET OF BUILDING

A. Steel Pipe: ASTM A53/A53M Schedule 40 black.
   1. Fittings: ASTM A234/A234M, wrought steel welding type.
   2. Joints: ASME B31.1, welded.
   3. Jacket: AWWA C105/A21.5 polyethylene jacket or double layer, half-lapped 10 mil polyethylene tape.

2.9 NATURAL GAS PIPING, ABOVE GRADE

A. Steel Pipe: ASTM A53/A53M Schedule 40 black.
   1. Fittings: ASME B16.3, malleable iron, or ASTM A234/A234M, wrought steel welding type.
   2. Joints: NFPA 54, threaded or welded to ASME B31.1.

2.10 FLANGES, UNIONS, AND COUPLINGS

A. Unions for Pipe Sizes 3 Inches and Under:
   1. Ferrous pipe: Class 150 malleable iron threaded unions.
   2. Copper tube and pipe: Class 150 bronze unions with soldered joints.

B. Dielectric Connections: Union with galvanized or plated steel threaded end, copper solder end, water impervious isolation barrier.

2.11 PIPE HANGERS AND SUPPORTS

A. Plumbing Piping - Drain, Waste, and Vent:
   1. Hangers for Pipe Sizes 1/2 Inch to 1-1/2 Inches: Malleable iron, adjustable swivel, split ring.
   2. Hangers for Pipe Sizes 2 Inches and Over: Carbon steel, adjustable, clevis.

2.12 BALL VALVES

A. Construction, 4 Inches and Smaller: MSS SP-110, Class 150, 150 psi CWP, two piece bronze body, chrome plated brass ball, full port, teflon seats and stuffing box ring, bronze blow-out proof stem, lever handle, solder, threaded, or flanged ends with union.

PART 3 EXECUTION

3.1 INSTALLATION

A. Install valves with unions or flanges at each piece of equipment arranged to allow service, maintainence, and equipment removal without system shutdown.

B. Install in accordance with manufacturer's instructions.

C. Provide non-conducting dielectric connections wherever jointing dissimilar metals.

D. Route piping in orderly manner and maintain gradient. Route parallel and perpendicular to walls.

E. Install piping to maintain headroom, conserve space, and not interfere with use of space.

F. Group piping whenever practical at common elevations.

G. Provide clearance in hangers and from structure and other equipment for installation of insulation and access to valves and fittings. Refer to Section 22 0719.

H. Provide access where valves and fittings are not exposed.

END OF SECTION

SECTION 22 3000 - PLUMBING EQUIPMENT

PART 1 GENERAL

1.1 SUBMITTALS

A. Product Data:
   1. Provide dimension drawings of water heaters indicating components and connections to other equipment and piping.
   2. Provide electrical characteristics and connection requirements.

PART 2 PRODUCTS

2.1 COMMERCIAL ELECTRIC WATER HEATERS

A. Type: Factory-assembled and wired, electric, vertical storage.

B. Tank: Glass lined welded steel; 4 inch diameter inspection port, thermally insulated with minimum 2 inches glass fiber encased in corrosion-resistant steel jacket; baked-on enamel finish.

C. Controls: Automatic immersion water thermostat; externally adjustable temperature range from 60 to 180 degrees F, flanged or screw-in nichrome elements, high temperature limit thermostat.

D. Accessories: Provide:
   1. Water connections: Brass.
   2. Dip tube.
   3. Drain Valve.
   4. Anode: Magnesium.
   5. Temperature and Pressure Relief Valve: ASME labelled.

E. Heating Elements: Flange-mounted immersion elements; individual elements sheathed with Incoloy corrosion-resistant metal alloy, rated less than 75 Watts per square inch.

2.2 DIAPHRAGM-TYPE COMPRESSION TANKS

A. Construction: Welded steel, tested and stamped in accordance with ASME BPVC-VIII-1; supplied with National Board Form U-1, rated for working pressure of 125 psig, with flexible EPDM diaphragm sealed into tank, and steel legs or saddles.

B. Accessories: Pressure gage and air-charging fitting, tank drain; precharge to 12 psig.

2.3 IN-LINE CIRCULATOR PUMPS

A. Casing: Bronze, rated for 125 psig working pressure, with stainless steel rotor assembly.

B. Impeller: Bronze.

C. Shaft: Alloy steel with integral thrust collar and two oil lubricated bronze sleeve bearings.

D. Seal: Carbon rotating against a stationary ceramic seat.

E. Drive: Flexible coupling.

PART 3 EXECUTION

3.1 INSTALLATION

A. Install plumbing equipment in accordance with manufacturer's instructions, as required by code, and complying with conditions of certification, if any.

B. Coordinate with plumbing piping and related fuel piping work to achieve operating system.

C. Domestic Water Storage Tanks:
   1. Provide steel pipe support, independent of building structural framing members.
   2. Clean and flush prior to delivery to site. Seal until pipe connections are made.

D. Pumps:

1. Ensure pumps operate at specified system fluid temperatures without vapor binding and cavitation, are non-overloading in parallel or individual operation, and operate within 25 percent of midpoint of published maximum efficiency curve.

END OF SECTION

SECTION 22 4000 - PLUMBING FIXTURES

PART 1 GENERAL

1.1 SUBMITTALS

A. Product Data: Provide catalog illustrations of fixtures, sizes, rough-in dimensions, utility sizes, trim, and finishes.

PART 2 PRODUCTS

2.1 GENERAL

A. Potable Water Systems: Provide plumbing fittings and faucets that comply with NSF 61 and NSF 372 for maximum lead content; label pipe and fittings.

2.2 FIXTURES: REFER TO SCHEDULES ON DRAWINGS.

PART 3 EXECUTION

3.1 INSTALLATION

A. Install each fixture with trap, easily removable for servicing and cleaning.

B. Provide chrome plated rigid or flexible supplies to fixtures with loose key stops, reducers, and escutcheons.

C. Install components level and plumb.

D. Install and secure fixtures in place with wall supports and bolts.

E. Seal fixtures to wall and floor surfaces with sealant as specified in Section 07 9005, color to match fixture.

END OF SECTION

SECTION 23 0513 - COMMON MOTOR REQUIREMENTS FOR HVAC EQUIPMENT

PART 1 GENERAL

1.1 SUBMITTALS

A. Product Data: Provide wiring diagrams with electrical characteristics and connection requirements.

1.2 QUALITY ASSURANCE

A. Conform to NFPA 70.

1.3 WARRANTY

A. Warrant the Work specified herein for one year and motors for five years beginning on the date of substantial completion against becoming unserviceable or causing an objectionable appearance resulting from either defective or nonconforming materials and workmanship.

PART 2 PRODUCTS

2.1 GENERAL CONSTRUCTION AND REQUIREMENTS

A. Construction:
   1. Open drip-proof type except where specifically noted otherwise.
   2. Design for continuous operation in 40 degrees C environment.
   3. Design for temperature rise in accordance with NEMA MG 1 limits for insulation class, service factor, and motor enclosure type.
   4. Use Inverter duty motors.

B. Visible Nameplate: Indicating motor horsepower, voltage, phase, cycles, RPM, full load amps, locked rotor amps, frame size, manufacturer's name and model number, service factor, power factor, efficiency.

C. Wiring Terminations:
   1. Provide terminal lugs to match branch circuit conductor quantities, sizes, and materials indicated. Enclose terminal lugs in terminal box sized to NFPA 70, threaded for conduit.

2.2 THREE PHASE POWER - SQUIRREL CAGE MOTORS

PART 3 EXECUTION

3.1 INSTALLATION

A. Install securely on firm foundation. Mount ball bearing motors with shaft in any position.

END OF SECTION

SECTION 23 0548 - VIBRATION AND SEISMIC CONTROLS FOR HVAC PIPING AND EQUIPMENT

PART 1 GENERAL

1.01 QUALITY ASSURANCE

PART 2 PRODUCTS

2.1 PERFORMANCE REQUIREMENTS

A. General:
   1. All vibration isolators, base frames and inertia bases to conform to all uniform deflection and stability requirements under all operating loads.
   2. Steel springs to function without undue stress or overloading.

2.2 EQUIPMENT SUPPORT BASES

2.3 VIBRATION ISOLATORS

A. Non-Seismic Type:
   1. All Elastomeric-Fiber Glass Pads:
      a. Configuration: Flat or molded.
      b. Thickness: 0.25 inch minimum.
      c. Assembly: Single or multiple layers using bonded, galvanized sheet metal separation plate between each layer with load plate providing evenly distributed load over pad surface.
   2. Elastomeric Mounts:
      a. Material: Oil, ozone, and oxidant resistant compounds.
      b. Assembly: Encapsulated load transfer plate bolted to equipment and base plate with anchor hole bolted to supporting structure.
   3. Steel Springs:
      a. Assembly: Freestanding, laterally stable without housing.
      b. Leveling Device: Rigidly connected to equipment or frame.

END OF SECTION

SECTION 23 0553 - IDENTIFICATION FOR HVAC PIPING AND EQUIPMENT

PART 1 GENERAL

1.1 SUBMITTALS

A. Product Data: Provide manufacturers catalog literature for each product required.

PART 2 PRODUCTS

2.1 NAMEPLATES

A. Letter Color: White.

B. Letter Height: 1/4 inch.

C. Background Color: Black.

2.2 CEILING TACKS

A. Description: Steel with 3/4 inch diameter color coded head.

PART 3 EXECUTION

3.1 INSTALLATION

A. Install nameplates with corrosive-resistant mechanical fasteners, or adhesive. Apply with sufficient adhesive to ensure permanent adhesion and seal with clear lacquer.

B. Install ductwork with plastic nameplates. Identify with air handling unit identification number and area served. Locate identification at air handling unit, at each side of penetration of structure or enclosure, and at each obstruction.

C. Locate ceiling tacks to locate valves or dampers above lay-in panel ceilings. Locate in corner of panel closest to equipment.

END OF SECTION

SECTION 23 0593 - TESTING, ADJUSTING, AND BALANCING FOR HVAC

PART 1 GENERAL

TESTING AND BALANCING BY AN AABC CERTIFIED TESTING AND BALANCING CONTRACTOR IS REQUIRED.

PART 2 PRODUCTS - NOT USED

PART 3 EXECUTION

END OF SECTION

SECTION 23 0713 - DUCT INSULATION

PART 1 GENERAL

1.1 SUBMITTALS

A. Product Data: Provide product description, thermal characteristics, list of materials and thickness for each service, and locations.

PART 2 PRODUCTS

2.1 REQUIREMENTS FOR ALL PRODUCTS OF THIS SECTION

A. Surface Burning Characteristics: Flame spread/Smoke developed index of 25/50, maximum, when tested in accordance with ASTM E84, NFPA 255, or UL 723.

2.2 GLASS FIBER, FLEXIBLE

A. Insulation: ASTM C553; flexible, noncombustible blanket.
   1. 'K' value: 0.36 at 75 degrees F, when tested in accordance with ASTM C518.
   2. Maximum Service Temperature: 1200 degrees F.
   3. Maximum Water Vapor Sorption: 5.0 percent by weight.

B. Vapor Barrier Jacket:
   1. Kraft paper with glass fiber yarn and bonded to aluminized film.
   2. Moisture Vapor Permeability: 0.02 perm inch, when tested in accordance with ASTM E96/E96M.

2.3 GLASS FIBER, RIGID

A. Insulation: ASTM C612; rigid, noncombustible blanket.
   1. 'K' value: 0.24 at 75 degrees F, when tested in accordance with ASTM C518.
   2. Maximum service temperature: 450 degrees F.
   3. Maximum Water Vapor Sorption: 5.0 percent.
   4. Maximum Density: 8.0 lb/cu ft.

B. Vapor Barrier Jacket:
   1. Kraft paper with glass fiber yarn and bonded to aluminized film.
   2. Moisture Vapor Permeability: 0.02 perm inch, when tested in accordance with ASTM E96/E96M.

2.4 JACKETS

A. Canvas Jacket: UL listed 6 oz/sq yd plain weave cotton fabric treated with dilute fire retardant lagging adhesive.

B. Aluminum Jacket: ASTM B209 (ASTM B209M).
   1. Thickness: 0.016 inch x 36 inch sheet with moisture barrier.
   2. Finish: Smooth.
   3. Joining: Longitudinal slip joints and 2 inch laps.
   4. Fittings: 0.016 inch thick die shaped fitting covers with factory attached protective liner.
   5. Aluminum fasteners: 0.75 inch bands, 0.75 inch wing seals, 0.024 elbow covers.
   6. Screws are not to be used to secure jacketing.

C. Stainless Steel Jacket - Type 304 (High Traffic Area): ASTM B209 (ASTM B209M).
   1. Thickness: 0.020 inch x 36 inch sheet with moisture barrier.
   2. Finish: Smooth.
   3. Joining: Longitudinal slip joints and 2 inch laps.
   4. Fittings: 0.020 inch thick die shaped fitting covers with factory attached protective liner.
   5. Type 304 stainless steel fasteners: 0.50 inch x 0.020 bands, 0.50 inch wing seals.
   6. Screws are not to be used to secure jacketing.

2.5 DUCT LINER

A. Insulation: Non-corrosive, incombustible glass fiber complying with ASTM C1071; flexible blanket, rigid board, and preformed round liner board; impregnated surface and edges coated with poly vinyl acetate polymer, acrylic polymer, or black composite.
   1. Apparent Thermal Conductivity: Maximum of 0.31 at 75 degrees F.
   2. Service Temperature: Up to 250 degrees F.
   3. Minimum Noise Reduction Coefficients:
      a. 1-1/2 inches Thickness: 0.60.
      b. 2 inch Thickness: 0.70.

B. Adhesive: Waterproof, fire-retardant type, ASTM C916.

C. Liner Fasteners: Galvanized steel, self-adhesive pad with integral head.

PART 3 EXECUTION

3.1 INSTALLATION

A. Install in accordance with NAIMA National Insulation Standards.

END OF SECTION

SECTION 23 0800 - COMMISSIONING OF HVAC

PART 1 GENERAL

PART 2 PRODUCTS

2.1 TEST EQUIPMENT

A. Provide all standard testing equipment required to perform startup and initial checkout and required functional performance testing; unless otherwise noted such testing equipment will NOT become the property of Owner.

B. Equipment-Specific Tools: Where special testing equipment, tools and instruments are specific to a piece of equipment, are only available from the vendor, and are required in order to accomplish startup or Functional Testing, provide such equipment, tools, and instruments as part of the work at no extra cost to Owner; such equipment, tools, and instruments are to become the property of Owner.

PART 3 EXECUTION

END OF SECTION

SECTION 23 0923 - DIRECT-DIGITAL CONTROL SYSTEM FOR HVAC

PART 1 GENERAL

1.1 SUBMITTALS

A. Product Data: Provide data for each system component and software module.

B. Shop Drawings:
   1. Indicate trunk cable schematic showing programmable control unit locations, and trunk data conductors.
   2. List connected data points, including connected control unit and input device.
   3. Indicate system graphics indicating monitored systems, data (connected and calculated) point addresses, and operator notations. Provide demonstration diskette containing graphics.
   4. Show system configuration with peripheral devices, batteries, power supplies, diagrams, modems, and interconnections.
   5. Indicate description and sequence of operation of operating, user, and application software.

C. Project Record Documents: Record actual locations of control components, including control units, thermostats, and sensors.

PART 2 PRODUCTS

2.1 SYSTEM DESCRIPTION

A. Automatic temperature control field monitoring and control system using field programmable micro-processor based units with communications to Building Management System specified in Section .

B. Base system on distributed system of fully intelligent, stand-alone controllers, operating in a multi-tasking, multi-user environment on token passing network, with central and remote hardware, software, and interconnecting wire and conduit.

C. Include computer software and hardware, operator input/output devices, control units, local area networks (LAN), sensors, control devices, actuators.

D. Controls for variable air volume terminals, radiation, reheat coils, unit heaters, fan coils, and the like when directly connected to the control units. Individual terminal unit control is specified in Section 23 0913.

E. Provide control systems consisting of thermostats, control valves, dampers and operators, indicating devices, interface equipment and other apparatus and accessories required to operate mechanical systems, and to perform functions specified.

F. Include installation and calibration, supervision, adjustments, and fine tuning necessary for complete and fully operational system.

2.2 OPERATOR INTERFACE

A. PC Based Work Station:

B. Workstation, controllers, and control backbone to communicate using BACnet protocol and addressing.

C. BACnet protocol to comply with ASHRAE Std 135.

D. Hardware:
   1. Desktop:
      a. Computer(s) and display(s) to be provided by DDC controls manufacturer.
      b. Network Connection:
         1) Ethernet interface card.
      c. System Printer:
         1) Printer(s) to be provided by DDC controls manufacturer.
         2) Quantity: As indicated on the drawings.

2.3 CONTROLLERS

A. BUILDING CONTROLLERS
   1. General:
      a. Manage global strategies by one or more, independent, standalone, microprocessor based controllers.
      b. Provide sufficient memory to support controller's operating system, database, and programming requirements.
      c. Share data between networked controllers.
      d. Controller operating system manages input and output communication signals allowing distributed controllers to share real and virtual object information and allowing for central monitoring and alarms.
      e. Continuously check processor status and memory circuits for abnormal operation.
      f. Controller to assume predetermined failure mode and generate alarm notification upon detection of abnormal operation.
   2. Communication:
      a. Controller to reside on a BACnet network using ISO 8802-3 (ETHERNET) Data Link/Physical layer protocol.
      b. Perform routing when connected to a network of custom application and application specific controllers.
   3. Anticipated Environmental Ambient Conditions:
      a. Outdoors and/or in Wet Ambient Conditions:
         1) Mount within waterproof enclosures.
      b. Conditioned Space:
         1) Mount within dustproof enclosures.
   4. Memory: In the event of a power loss, maintain all BIOS and programming information for a minimum of 72 hours.
   5. Power and Noise Immunity:
      a. Maintain operation at 90 to 110 percent of nominal voltage rating.
      b. Perform orderly shutdown below 80 percent of nominal voltage.

B. APPLICATION SPECIFIC CONTROLLERS
   1. General:
      a. Not fully user programmable, microprocessor based controllers dedicated to control specific equipment.
   2. Communication:
      a. Controller to reside on a BACnet network using MS/TP Data Link/Physical layer protocol.
   3. Anticipated Environmental Ambient Conditions:
      a. Outdoors and/or in Wet Ambient Conditions:
         1) Mount within waterproof enclosures.
      b. Conditioned Space:
         1) Mount within dustproof enclosures.
   4. Memory: In the event of a power loss, maintain all BIOS and programming information for a minimum of 72 hours.
   5. Power and Noise Immunity:
      a. Maintain operation at 90 to 110 percent of nominal voltage rating.
      b. Perform orderly shutdown below 80 percent of nominal voltage.

C. INPUT/OUTPUT INTERFACE
   1. Hardwired inputs and outputs tie into the DDC system through building, custom application, or application specific controllers.
   2. All Input/Output Points:
      a. Protect controller from damage resulting from any point short-circuiting or grounding and from voltage up to 24 volts of any duration.

b. Provide universal type for building and custom application controllers where input or output is software designated as either binary or analog type with appropriate properties.

3. Binary Inputs:
   a. Allow monitoring of On/Off signals from remote devices.
4. Pulse Accumulation Input Objects: Conform to all requirements of binary input objects and accept up to 10 pulses per second.
5. Analog Inputs:
   a. Allow for monitoring of low voltage 0 to 10 VDC, 4 to 20 mA current, or resistance signals (thermistor, RTD).
6. Binary Outputs:
   a. Used for On/Off operation or a pulsed low-voltage signal for pulse width modulation control.
7. Analog Outputs:
   a. Monitoring signal provides a 0 to 10 VDC or a 4 to 20 mA output signal for end device control.
8. Tri State Outputs:
   a. Coordinate two binary outputs to control three point, floating type, electronic actuators without feedback.
9. System Object Capacity:
   a. System size to be expandable to twice the number of input output objects required by providing additional controllers, including associated devices and wiring.

2.4 POWER SUPPLIES AND LINE FILTERING

A. Power Supplies:
   1. Provide UL listed control transformers with Class 2 current limiting type or over-current protection in both primary and secondary circuits for Class 2 service as required by the NEC.
   2. Provide over-voltage and over-current protection to withstand a 150 percent current overload for 3 seconds minimum without trip-out or failure.
   3. EM/RF meets FCC Class B and VDE 0871 for Class B and MIL-STD 810 for shock and vibration.
   4. Line voltage units UL recognized and CSA approved.

B. Power Line Filtering:
   1. Provide external or internal transient voltage and surge suppression component for all workstations and controllers.

2.5 LOCAL AREA NETWORK (LAN)

A. Provide communication between control units over local area network (LAN).

B. LAN Capacity: Not less than 60 stations or nodes.

C. Break in Communication Path: Alarm and automatically initiate LAN reconfiguration.

D. LAN Data Speed: Minimum 19.2 Kb.

E. Communication Techniques: Allow interface into network by multiple operation stations and by auto-answer/auto-dial modems. Support communication over telephone lines utilizing modems.

F. Transmission Median: Fiber optic or single pair of solid 24 gauge twisted, shielded copper cable.

G. Network Support: Time for global point to be received by any station, shall be less than 3 seconds. Provide automatic reconfiguration if any station is added or lost. If transmission cable is cut, reconfigure two sections with no disruption to system's operation, without operator intervention.

2.6 SYSTEM SOFTWARE

A. Operating System:

1. Concurrent, multi-tasking capability.
    a. Common Software Applications Supported: Microsoft Excel.
    b. Acceptable Operating Systems: .
2. System Graphics:
    a. Allow up to 10 graphic screens, simultaneously displayed for comparison and monitoring of system status.
    b. Provide method for operator with password to perform the following:
        1) Move between, change size, and change location of graphic displays.
        2) Modify on-line.
        3) Add, delete, or change dynamic objects consisting of:
            (a) Analog and binary values.
            (b) Dynamic text.
            (c) Static text.
            (d) Animation files.
3. Custom Graphics Generation Package:
    a. Create, modify, and save graphic files and visio format graphics in PCX formats.
    b. HTML graphics to support web browser compatible formats.
    c. Capture or convert graphics from AutoCAD.
4. Standard HVAC Graphics Library:
    a. HVAC Equipment:
    b. Ancillary Equipment:

B. Workstation System Applications:
1. Automatic System Database Save and Restore Functions:
2. Manual System Database Save and Restore Functions by Operator with Password Clearance:
    a. Save database from any system panel.
3. Software provided allows system configuration and future changes or additions by operators under proper password protection.
4. On-line Help:
    a. Context-sensitive system assists operator in operation and editing.
5. Security:
    a. Operator log-on requires user name and password to view, edit, add, or delete data.
6. System Diagnostics:
    a. Operations Automatically Monitored:
        1) Workstations.
        2) Printers.
        3) Modems.
        4) Network connections.
        5) Building management panels.
        6) Controllers.
7. Alarm Processing:
    a. All system objects are configurable to "alarm in" and "alarm out" of normal state.
8. Alarm Messages:
    a. Descriptor: English language.
9. Configurable Alarm Reactions by Workstation and Time of Day:
    a. Logging.
10. Custom Trend Logs:
    a. Definable for any data object in the system including interval, start time, and stop time.
11. Alarm and Event Log:
    a. View all system alarms and change of states from any system location.
    b. Operator with proper security acknowledges and clears alarms.
12. Object, Property Status and Control:

a. Provide a method to view, edit if applicable, the status of any object and property in the system.

13. Reports and Logs:
    a. Reporting Package:
        1) Allows operator to select, modify, or create reports.
    b. Real-time logs available by type or status such as alarm, lockout, normal, etc.
    c. Stored on hard disk and readily accessible by standard software applications, including spreadsheets and word processing.
14. Reports:
    a. Standard:
        1) Objects with current values.
        2) Current alarms not locked out.
        3) Disabled and overridden objects, points and SNVTs.
        4) Objects in manual or automatic alarm lockout.
        5) Objects in alarm lockout currently in alarm.
        6) Logs:
            (a) Alarm History.
            (b) System messages.
            (c) System events.
            (d) Trends.
    b. Custom:
        1) Daily.
        2) Weekly.
        3) Monthly.
        4) Annual.
        5) Time and date stamped.
    c. Tenant Override:
        1) Monthly report showing total, requested, after-hours HVAC and lighting services on a daily basis for each tenant.
        2) Annual report showing override usage on a monthly basis.
    d. Electrical, Fuel, and Weather:
        1) Electrical Meter(s):
            (a) Monthly showing daily electrical consumption and peak electrical demand with time and date stamp for each meter.
        2) Fuel Meter(s):
            (a) Monthly showing daily natural gas consumption for each meter.
        3) Weather:
            (a) Monthly showing minimum, maximum, average outdoor air temperature and heating/cooling degree-days for the month.

C. Workstation Applications Editors:
    1. Provide editing software for all system applications at the PC workstation.
    2. Full screen editor for each application allows operator to view and change:
        a. Configuration.
    3. Scheduling:
        a. Monthly calendar indicates schedules, holidays, and exceptions.
    4. Custom Application Programming:
        a. Create, modify, debug, edit, compile, and download custom application programming during operation and without disruption of all other system applications.

2.7 CONTROLLER SOFTWARE

A. All applications reside and operate in the system controllers and editing of all applications occurs at the operator workstation.

B. System Security:

1. User access secured via user passwords and user names.
2. User Log On/Log Off attempts are recorded.

C. Object or Object Group Scheduling:
1. Weekly Schedules Based on Separate, Daily Schedules:

D. Provide standard application for equipment coordination and grouping based on function and location to be used for scheduling and other applications.

E. Alarms:
1. Binary object is set to alarm based on the operator specified state.
2. Analog object to have high/low alarm limits.
3. All alarming is capable of being automatically and manually disabled.

F. Maintenance Management: System monitors equipment status and generates maintenance messages based upon user-designated run-time limits.

G. Sequencing: Application software based upon specified sequences of operation in Section 23 0993.

H. Staggered Start Application:
1. Prevents all controlled equipment from simultaneously restarting after power outage.

I. Energy Calculations:
1. Accumulated instantaneous power or flow rates are converted to energy use data.

J. Anti-Short Cycling:
1. All binary output objects protected from short-cycling.

K. On-Off Control with Differential:

L. Run-Time Totalization:
1. Provides operator with capability to assign high run-time alarm.

2.8 HVAC CONTROL PROGRAMS

A. General:
1. Identify each HVAC Control system.

B. Optimal Run Time:

PART 3 EXECUTION

3.1 INSTALLATION

A. Provide conduit and electrical wiring in accordance with Section 26 2717. Electrical material and installation shall be in accordance with appropriate requirements of Division 26.

END OF SECTION

SECTION 23 3100 - HVAC DUCTS AND CASINGS

PART 1 GENERAL

1.1 SUBMITTALS

A. Indicate duct fittings, particulars such as gages, sizes, welds, and configuration prior to start of work.

B. The contract documents are schematic in nature and are to be used only for design intent. The contractor shall prepare sheet metal shop drawings, fully detailed and drawn to scale, indicating all structural conditions, all plumbing pipe and light fixture coordination, and all offsets and transitions as required to permit the duct to fit in the space allocated and built. All duct revisions required as a result of the contractor not preparing fully detailed shop drawings will be performed at no additional cost.

PART 2 PRODUCTS

2.1 DUCT ASSEMBLIES

A. Low Pressure Supply (System with Cooling Coils): 1/2 inch w.g. pressure class, galvanized steel. Ductwork to be finish grade spiral round or flat oval in exposed areas.

B. Medium and High Pressure Supply: 1/2 inch w.g. pressure class, galvanized steel. Ductwork to be finish grade spiral round or flat oval in exposed areas.

C. Return and Relief: 1/2 inch w.g. pressure class, galvanized steel.

D. Transfer Air and Sound Boots: 1/2 inch w.g. pressure class, fibrous glass.

2.2 DUCTWORK MATERIALS

A. Galvanized Steel for Ducts: Hot-dipped galvanized steel sheet, ASTM A653/A653M FS Type B, with G60/Z180 coating.

2.3 DUCTWORK FABRICATION

A. Fabricate and support in accordance with SMACNA (DCS) and as indicated.

B. Provide duct material, gages, reinforcing, and sealing for operating pressures indicated.

C. Increase duct sizes gradually, not exceeding 15 degrees divergence wherever possible; maximum 30 degrees divergence upstream of equipment and 45 degrees convergence downstream.

D. Fabricate continuously welded round and oval duct fittings in accordance with SMACNA (DCS).

2.4 MANUFACTURED DUCTWORK AND FITTINGS

A. Flat Oval and Round Ducts: Machine made from round spiral lockseam duct.
   1. Manufacture in accordance with SMACNA (DCS).
   2. Fittings: Manufacture at least two gages heavier metal than duct.
   3. Provide duct material, gages, reinforcing, and sealing for operating pressures indicated.
   4. Provide liner type insulation.

B. Kitchen Cooking Hood Exhaust: Nominal 3 inches thick ceramic fiber insulation between 20 gage, 0.0375 inch, Type 304 stainless steel liner and 24 gage, 0.0239 inch aluminized steel sheet outer jacket.
   1. Tested and UL listed for use with commercial cooking equipment in accordance with NFPA 96.
   2. Certified for zero clearance to combustible material in accordance with:
   3. Materials and construction of the modular sections and accessories to be in accordance with the terms of the following listings:

2.5 CASINGS

A. Fabricate casings in accordance with SMACNA (DCS) and construct for operating pressures indicated.

B. Mount floor mounted casings on 4 inch high concrete curbs. At floor, rivet panels on 8 inch centers to angles. Where floors are acoustically insulated, provide liner of galvanized 18 gage, 0.0478 inch expanded metal mesh supported at 12 inch centers, turned up 12 inches at sides with sheet metal shields.

C. Reinforce door frames with steel angles tied to horizontal and vertical plenum supporting angles. Install hinged access doors where indicated or required for access to equipment for cleaning and inspection.

D. Fabricate acoustic casings with reinforcing turned inward. Provide 16 gage, 0.0598 inch sheet steel back facing and 22 gage, 0.0299 inch perforated sheet steel front facing with 3/32 inch diameter holes on 5/32 inch centers. Construct panels 3 inches thick packed with 4.5 lb/cu ft minimum glass fiber insulation media, on inverted channels of 16 gage, 0.0598 inch sheet steel.

2.6 FIBROUS GLASS DUCTS

A. Fabricate in accordance with SMACNA (FGD), except as indicated.

B. Machine fabricate fibrous glass ducts and fittings. Make only minor on site manual adjustments.

C. Do not use fibrous glass ducts within 12 inches of electric or fuel fired heaters.

PART 3 EXECUTION

3.1 INSTALLATION

A. Provide openings in ductwork where required to accommodate thermometers and controllers. Provide pilot tube openings where required for testing of systems, complete with metal can with spring device or screw to ensure against air leakage. Where openings are provided in insulated ductwork, install insulation material inside a metal ring.

END OF SECTION

SECTION 23 3300 - AIR DUCT ACCESSORIES

PART 1 GENERAL

1.1 SUBMITTALS

A. Shop Drawings: Indicate for shop fabricated assemblies including volume control dampers, duct access doors, and duct test holes.

PART 2 PRODUCTS

2.1 AIR TURNING DEVICES

2.2 BACKDRAFT DAMPERS - METAL

A. Gravity Backdraft Dampers, Size 18 x 18 inches or Smaller, Furnished with Air Moving Equipment: Air moving equipment manufacturer's standard construction.

B. Multi-Blade, Parallel Action Gravity Balanced Backdraft Dampers: Galvanized steel, with center pivoted blades of maximum 6 inch width, with felt or flexible vinyl sealed edges, linked together in rattle-free manner with 90 degree stop, steel ball bearings, and plated steel pivot pin; adjustment device to permit setting for varying differential static pressure.

2.3 BACKDRAFT DAMPERS - FABRIC

2.4 COMBINATION FIRE AND SMOKE DAMPERS

A. Fabricate in accordance with NFPA 90A, UL 555, UL 555S, and as indicated.

B. Operators: UL listed and labelled spring return electric type suitable for 120 volts, single phase, 60 Hz. Locate damper operator on interior of duct and link to damper operating shaft.

2.5 DUCT ACCESS DOORS

A. Fabricate in accordance with SMACNA (DCS) and as indicated.

B. Review locations prior to fabrication

C. Fabricate rigid and close fitting doors of galvanized steel with sealing gaskets and quick fastening locking devices. For insulated ductwork, install minimum one inch thick insulation with sheet metal cover. Insulation shall be replaceable without field cutting or patching.

D. Access doors with sheet metal screw fasteners are not acceptable.

2.6 DUCT TEST HOLES

A. Temporary Test Holes: Cut or drill in ducts as required. Cap with neat patches, neoprene plugs, threaded plugs, or threaded or twist-on metal caps.

B. Permanent Test Holes: Factory fabricated, air tight flanged fittings with screw cap. Provide extended neck fittings to clear insulation.

2.7 FIRE DAMPERS

A. Fabricate in accordance with NFPA 90A and UL 555, and as indicated.

B. Curtain Type Dampers: Galvanized steel with interlocking blades. Provide stainless steel closure springs and latches for horizontal installations. Configure with blades out of air stream except for 1.0 inch pressure class ducts up to 12 inches in height.

C. Multiple Blade Dampers: 16 gage, 0.0598 inch galvanized steel frame and blades, oil-impregnated bronze or stainless steel sleeve bearings and plated steel axles, 1/8 x 1/2 inch plated steel concealed linkage, stainless steel closure spring, blade stops, and lock.

D. Fusible Links: UL 33, separate at 160 degrees F with adjustable link straps for combination fire/balancing dampers.

2.8 FLEXIBLE DUCT CONNECTIONS TO AIR MOVING EQUIPMENT

2.9 SMOKE DAMPERS

A. Fabricate in accordance with NFPA 90A and UL 555S, and as indicated.

B. Dampers: UL Class 1 curtain type fire damper, normally open automatically operated by electric actuator.

C. Electro Thermal Link: Fusible link melting at 165 degrees F; 120 volts, single phase, 60 Hz; UL listed and labeled.

2.10 VOLUME CONTROL DAMPERS

A. Fabricate in accordance with SMACNA (DCS) and as indicated.

B. Splitter Dampers:
   1. Material: Same gage as duct to 24 inches size in either direction, and two gages heavier for sizes over 24 inches.
   2. Blade: Fabricate of double thickness sheet metal to streamline shape, secured with continuous hinge or rod.
   3. Operator: Minimum 1/2 inch diameter rod in self aligning, universal joint action, flanged bushing with set screw .

C. Single Blade Dampers: Fabricate for duct sizes up to 9.5x24 inch.

D. Multi-Blade Damper: Fabricate of opposed blade pattern with maximum blade sizes 12x72 inch. Assemble center and edge crimped blades in prime coated or galvanized channel frame with suitable hardware. On outside air, return air, and all other dampers required to be low leakage type, provide galvanized blades and frames, seven inches wide maximum, with replaceable vinyl, EPDM, silicone rubber seals on blade edges and stainless steel side seals. Provide blades in a double sheet corrugated type construction for extra strength. Provide hat channel shape frames for strength and blade linkage enclosure to keep linkage out of the air stream. Construction leakage not to exceed 1/2%, based on 2,000 fpm and 4 inch static pressure.

E. End Bearings: Except in round ducts 12 inches and smaller, provide end bearings. On multiple blade dampers, provide oil-impregnated nylon, thermoplastic elastomer, or sintered bronze bearings.

F. Quadrants:
   1. Provide locking, indicating quadrant regulators on single and multi-blade dampers.
   2. On insulated ducts mount quadrant regulators on stand-off mounting brackets, bases, or adapters.

PART 3 EXECUTION

3.1 INSTALLATION

A. Install accessories in accordance with manufacturer's instructions, NFPA 90A, and follow SMACNA (DCS). Refer to Section 23 3100 for duct construction and pressure class.

B. Provide duct access doors for inspection and cleaning before and after filters, coils, fans, automatic dampers, at fire dampers, combination fire and smoke dampers, and elsewhere as indicated. Provide for cleaning kitchen exhaust ducts in accordance with NFPA 96. Provide minimum 8 x 8 inch size for hand access, size for shoulder access, and as indicated. Provide 4 x 4 inch for balancing dampers only. Review locations prior to fabrication.

C. Provide duct test holes where indicated and required for testing and balancing purposes.

END OF SECTION

SECTION 23 3423 - HVAC POWER VENTILATORS

PART 1 GENERAL

1.1 SUBMITTALS

A. Product Data: Provide data on fans and accessories including fan curves with specified operating point clearly plotted, power, RPM, sound power levels at rated capacity, and electrical characteristics and connection requirements.

B. Maintenance Materials: Furnish the following for Owner's use in maintenance of project.
   1. See Section 01 6000 - Product Requirements, for additional provisions.
   2. Extra Fan Belts: One set for each individual fan.

PART 2 PRODUCTS

2.1 POWER VENTILATORS - GENERAL

A. Manufacturers:

B. A. Provide fans that are factory fabricated and assembled, factory tested, and factory finished with indicated capacities and characteristics.

C. Static and Dynamically Balanced: AMCA 204 - Balance Quality and Vibration Levels for Fans.

D. C. Provide factory baked enamel finish coat after assembly. Color shall be verified during the submittal process.

E. Performance Ratings: Determined in accordance with AMCA 210 and bearing the AMCA Certified Rating Seal.

F. Sound Ratings: AMCA 301, tested to AMCA 300, and bearing AMCA Certified Sound Rating Seal.

G. Fabrication: Conform to AMCA 99.

H. Electrical Components: Listed and classified by Underwriters Laboratories Inc. as suitable for the purpose specified and indicated.

2.2 CENTRIFUGAL ROOF VENTILATORS

A. Fan Unit: V-belt or direct driven as indicated, with spun aluminum housing; resilient mounted motor; 1/2 inch mesh, 0.62 inch thick aluminum wire birdscreen; square base to suit roof curb with continuous curb gaskets.

B.

C. Accessories:
   1. Roof Curb: 12 inch high self-flashing of galvanized steel with continuously welded seams, built-in cant strips and built-in cant and mounting flange for flat roof decks, hinged curb adapter to permit access to dampers and duct connection, 2 inch thick, rigid, fiberglass insulation adhered to inside walls, and 2 inch wood nailer. Size as required to suit roof opening and fan base.
   2. Disconnect Switch: Factory wired, non-fusible, in housing for thermal overload protected motor .

D. Sheaves: Cast iron or steel, dynamically balanced, bored to fit shafts and keyed; variable and adjustable pitch motor sheave selected so required rpm is obtained with sheaves set at mid-position; fan shaft with self-aligning pre-lubricated ball bearings.

2.3 WALL EXHAUSTERS AND ASSEMBLIES LOCATED IN POOL ROOMS

A.

2.4 CABINET AND CEILING EXHAUST FANS

PART 3 EXECUTION

3.1 INSTALLATION

A. Install in accordance with manufacturer's instructions.

B. Secure roof exhausters with cadmium plated steel lag screws to roof curb.

C. Extend ducts to roof exhausters into roof curb. Counterflash duct to roof opening.

D. Provide sheaves required for final air balance.

E. Provide backdraft dampers on outlet from cabinet and ceiling exhauster fans and as indicated.

END OF SECTION

SECTION 23 3600 - AIR TERMINAL UNITS

PART 1 GENERAL

1.1 SUBMITTALS

1.2 QUALITY ASSURANCE

PART 2 PRODUCTS

2.1 SHUTOFF, SINGLE DUCT TERMINAL UNITS

2.2 SERIES FAN POWERED TERMINAL UNITS

PART 3 EXECUTION

3.1 INSTALLATION

A. Install in accordance with manufacturer's instructions.

B. Provide ceiling access doors or locate units above easily removable ceiling components.

C. Support units individually from structure with wire rope complying with ASTM A492 and ASTM A603 in accordance with SMACNA 1981. See Section 22 0548.

D. Do not support from ductwork.

E. Connect to ductwork in accordance with Section 23 3100.

F. Do not install units in rooms with a ceiling height greater than 12'-0" AFF.

G. Do not install units in rooms with gypsum board ceilings without consent of the Owner. Access panels must be installed.

H. Verify that electric power is available and of the correct characteristics.

3.2 ADJUSTING

A. Reset volume with damper operator attached to assembly allowing flow range modulation from 100 percent of design flow to zero percent full flow. Set units with heating coils for minimum 50 percent full flow.

END OF SECTION

SECTION 23 3700 - AIR OUTLETS AND INLETS

PART 1 GENERAL

1.1 SUBMITTALS

A. Product Data: Provide data for equipment required for this project. Review outlets and inlets as to size, finish, and type of mounting prior to submission. Submit schedule of outlets and inlets showing type, size, location, application, accessories and noise level. 3. Performance data for each type of air distribution devices furnished, including aspiration ability, temperature and velocity traverses; throw and drop; and noise criteria ratings. Indicate selections on data.

PART 2 PRODUCTS

2.1 GOOSENECKS

A. Fabricate in accordance with SMACNA (DCS) of minimum 18 gage, 0.0598 inch galvanized steel.

B. Mount on minimum 12 inch high curb base where size exceeds 9 x 9 inch.

PART 3 EXECUTION

3.1 INSTALLATION

A. Check location of outlets and inlets and make necessary adjustments in position to conform with architectural features, symmetry, and lighting arrangement.

B. Provide balancing dampers on duct take-off to diffusers, and grilles and registers, despite whether dampers are specified as part of the diffuser, or grille and register assembly.

END OF SECTION

SECTION 23 4000 - HVAC AIR CLEANING DEVICES

PART 2 PRODUCTS

END OF SECTION

SECTION 23 7413 - PACKAGED OUTDOOR CENTRAL-STATION AIR-HANDLING UNITS

PART 1 GENERAL

1.1 SUBMITTALS

A. Product Data: Provide capacity and dimensions of manufactured products and assemblies required for this project. Indicate electrical service with electrical characteristics and connection requirements, and duct connections.

1.2 QUALITY ASSURANCE

1.3 WARRANTY

A. See Section 01 7800 - Closeout Submittals, for additional warranty requirements.

B. Provide a five year warranty to include coverage for refrigeration compressors.

PART 2 PRODUCTS

2.1 MANUFACTURED UNITS

A. General: Roof mounted units having gas burner and electric refrigeration.

B. Description: Self-contained, packaged, factory assembled and prewired, consisting of cabinet and frame, supply fan, heat exchanger and burner, controls, air filters, refrigerant cooling coil and compressor, condenser coil and condenser fan.

C. Electrical Characteristics: Refer to schedule on drawings.
   1. 480 volts, three phase, 60 Hz.

D. Disconnect Switch: Factory mount disconnect switch in control panel.

2.2 FABRICATION

A. Cabinet: Steel with baked enamel finish, including access panels with screwdriver operated flush cam type fasteners. Structural members shall be minimum 18 gage, 0.0478 inch, with access doors or panels of minimum 20 gage, 0.0359 inch.

B. Insulation: 2 inch thick neoprene coated glass fiber with edges protected from erosion.

C. Heat Exchangers: Stainless steel, of welded construction.

D. Supply Fan: Forward curved centrifugal type, resiliently mounted with V-belt drive, adjustable variable pitch motor pulley, and rubber isolated hinge mounted high efficiency motor or direct drive as indicated. Isolate complete fan assembly. Refer to Section 22 0548.

E. Air Filters: 2 inch thick glass fiber disposable media in metal frames. Refer to Section 23 4000.

F. Roof Mounting Curb: 14 inches high galvanized steel, channel frame with gaskets, nailer strips.

2.3 BURNER

A. Gas Burner: Atmospheric type burner with adjustable combustion air supply, pressure regulator, gas valves, manual shut-off, intermittent spark or glow coil ignition, flame sensing device, and automatic 100 percent shut-off pilot.

B. Gas Burner Safety Controls: Energize ignition, limit time for establishment of flame, prevent opening of gas valve until pilot flame is proven, stop gas flow on ignition failure, energize blower motor, and after air flow proven and slight delay, allow gas valve to open.

C. High Limit Control: Temperature sensor with fixed stop at maximum permissible setting, de-energize burner on excessive bonnet temperature and energize burner when temperature drops to lower safe value.

D. Supply Fan Control: Temperature sensor sensing bonnet temperatures and independent of burner controls, with provisions for continuous fan operation.

2.4 ELECTRIC HEATING COIL

A. Finned tube heating elements easily accessible with automatic reset thermal cut-out, built-in magnetic contactors, galvanized steel frame, control circuit transformer and fuse, manual reset thermal cut-out, airflow proving device, toggle switch (pilot duty), load fuses.

B. Controls: Start supply fan before electric elements are energized and continue operating until air temperature reaches minimum setting, with switch for continuous fan operation.

2.5 EVAPORATOR COIL

A. Provide copper tube aluminum fin coil assembly with galvanized drain pan and connection.

B. Provide capillary tubes or thermostatic expansion valves for units of 6 tons capacity and less, and thermostatic expansion valves and alternate row circuiting for units 7.5 tons cooling capacity and larger.

2.6 COMPRESSOR

A. Provide hermetic compressors, 3600 rpm maximum, resiliently mounted with positive lubrication, crankcase heater, high and low pressure safety controls, motor overload protection, suction and discharge service valves and gage ports, and filter drier.

B. Five minute timed off circuit to delay compressor start.

C. Provide step capacity control by hot gas by-pass.

2.7 CONDENSER COIL

A. Provide copper tube aluminum fin coil assembly with subcooling rows and coil guard.

B. Provide direct drive propeller fans, resiliently mounted with fan guard, motor overload protection, wired to operate with compressor. Provide high efficiency fan motors.

2.8 MIXED AIR CASING

A. Dampers: Provide outside, return, and relief dampers with damper operator and control package to automatically vary outside air quantity. Outside air damper to fall to closed position.

B. Gaskets: Provide tight fitting dampers with edge gaskets maximum leakage 5 percent at 2 inches pressure differential.

C. Damper Operator, Units 7.5 Ton Cooling Capacity and Larger: 24 volt with gear train sealed in oil with spring return on.

2.9 OPERATING CONTROLS

A. Provide controls in accordance with Section 23 0900 "Instrumentation and Control for HVAC."

PART 3 EXECUTION

3.1 INSTALLATION

A. Install in accordance with manufacturer's instructions.

B. Install in accordance with NFPA 90A.

3.2 SYSTEM STARTUP

A. Prepare and start equipment. Adjust for proper operation.

END OF SECTION

SECTION 23 8125 - COMPUTER ROOM AIR CONDITIONERS - CEILING MOUNTED

PART 1 GENERAL

1.1 SUBMITTALS

A. Product Data: Provide manufacturers literature and data indicating water, drain, and electrical characteristics and connection requirements.

1.2 WARRANTY

A. Provide a five year warranty to include coverage for refrigeration compressor.

PART 2 PRODUCTS

2.1 AIR CONDITIONING UNITS

A. Description: Self contained air cooled, factory assembled, pre-wired and pre-piped unit, consisting of cabinet, fan, filters, humidifier, controls.

PART 3 EXECUTION

3.01 INSTALLATION

END OF SECTION

SECTION 26 0519 - LOW-VOLTAGE ELECTRICAL POWER CONDUCTORS AND CABLES

PART 1 GENERAL

1.1 SUBMITTALS

A. Product Data: Provide manufacturer's standard catalog pages and data sheets for conductors and cables, including detailed information on materials, construction, ratings, listings, and available sizes, configurations, and stranding.

1.2 QUALITY ASSURANCE

A. Conform to requirements of NFPA 70.

PART 2 PRODUCTS

2.1 CONDUCTOR AND CABLE APPLICATIONS

A. Do not use conductors and cables for applications other than as permitted by NFPA 70 and product listing.

B. Provide single conductor building wire installed in suitable raceway unless otherwise indicated, permitted, or required.

C. Metal-clad cable is permitted only as follows:
   1. Where not otherwise restricted, may be used:
      a. Where concealed above accessible ceilings for final connections from junction boxes to luminaires.
         1) Maximum Length: 6 feet.

2.2 CONDUCTOR AND CABLE GENERAL REQUIREMENTS

A. Provide products that comply with requirements of NFPA 70.

B. Provide products listed, classified, and labeled as suitable for the purpose intended.

C. Unless specifically indicated to be excluded, provide all required conduit, boxes, wiring, connectors, etc. as required for a complete operating system.

D. Comply with NEMA WC 70.

E. Thermoplastic-Insulated Conductors and Cables: Listed and labeled as complying with UL 83.

F. Thermoset-Insulated Conductors and Cables: Listed and labeled as complying with UL 44.

G. Conductor Material:
   1. Provide copper conductors only. Aluminum conductors are not acceptable for this project. Conductor sizes indicated are based on copper.
   2. Copper Conductors: Soft drawn annealed, 98 percent conductivity, uncoated copper conductors complying with ASTM B3, ASTM B8, or ASTM B787/B 787M unless otherwise indicated.
   3. Tinned Copper Conductors: Comply with ASTM B33.

H. Minimum Conductor Size:
   1. Branch Circuits: 12 AWG.
      a. Exceptions:
         1) 20 A, 120 V circuits longer than 75 feet: 10 AWG, for voltage drop.
         2) 20 A, 120 V circuits longer than 150 feet: 8 AWG, for voltage drop.
         3) 20 A, 277 V circuits longer than 150 feet: 10 AWG, for voltage drop.

I. Where conductor size is not indicated, size to comply with NFPA 70 but not less than applicable minimum size requirements specified.

J. Conductor Color Coding:
   1. Color code conductors as indicated unless otherwise required by the authority having jurisdiction. Maintain consistent color coding throughout project.
   2. Color Coding Method: Integrally colored insulation.
   3. Color Code:

a. 480Y/277 V, 3 Phase, 4 Wire System:
   1) Phase A: Brown.
   2) Phase B: Orange.
   3) Phase C: Yellow.
   4) Neutral/Grounded: Gray.
b. 208Y/120 V, 3 Phase, 4 Wire System:
   1) Phase A: Black.
   2) Phase B: Red.
   3) Phase C: Blue.
   4) Neutral/Grounded: White.
c. Equipment Ground, All Systems: Green.
d. Isolated Ground, All Systems: Green with yellow stripe.
e. Travelers for 3-Way and 4-Way Switching: Pink.

2.3 SINGLE CONDUCTOR BUILDING WIRE

A. Description: Single conductor insulated wire.

B. Conductor Stranding:
   1. Feeders and Branch Circuits:
      a. Size 10 AWG and Smaller: Solid.
      b. Size 8 AWG and Larger: Stranded.

C. Insulation Voltage Rating: 600 V.

D. Insulation:
   1. Copper Building Wire: Type THHN/THWN or THHN/THWN-2, except as indicated below.

2.4 METAL-CLAD CABLE

A. Description: NFPA 70, Type MC cable listed and labeled as complying with UL 1569, and listed for use in classified firestop systems to be used.

B. Conductor Stranding:
   1. Size 10 AWG and Smaller: Solid.
   2. Size 8 AWG and Larger: Stranded.

C. Insulation Voltage Rating: 600 V.

D. Insulation: Type THHN, THHN/THWN, or THHN/THWN-2.

E. Grounding: Full-size integral equipment grounding conductor.

F. Armor: Steel, interlocked tape.

2.5 WIRING CONNECTORS

A. Manufacturers

B. Description: Wiring connectors appropriate for the application, suitable for use with the conductors to be connected, and listed as complying with UL 486A-486B or UL 486C as applicable.

C. Connectors for Grounding and Bonding: Comply with Section 26 0526.

D. Wiring Connectors for Splices and Taps:
   1. Copper Conductors Size 8 AWG and Smaller: Use twist-on insulated spring connectors.
   2. Copper Conductors Size 6 AWG and Larger: Use mechanical connectors or compression connectors.

E. Wiring Connectors for Terminations:
   1. Provide terminal lugs for connecting conductors to equipment furnished with terminations designed for terminal lugs.
   2. Provide compression adapters for connecting conductors to equipment furnished with mechanical lugs when only compression connectors are specified.

3. Where over-sized conductors are larger than the equipment terminations can accommodate, provide connectors suitable for reducing to appropriate size, but not less than required for the rating of the overcurrent protective device.
4. Provide motor pigtail connectors for connecting motor leads in order to facilitate disconnection.
5. Copper Conductors Size 8 AWG and Larger: Use mechanical connectors or compression connectors where connectors are required.
6. Stranded Conductors Size 10 AWG and Smaller: Use crimped terminals for connections to terminal screws.
7. Conductors for Control Circuits: Use crimped terminals for all connections.

F. Twist-on Insulated Spring Connectors: Rated 600 V, 221 degrees F for standard applications and 302 degrees F for high temperature applications; pre-filled with sealant and listed as complying with UL 486D for damp and wet locations.

G. Mechanical Connectors: Provide bolted type or set-screw type.

H. Compression Connectors: Provide circumferential type or hex type crimp configuration.

I. Crimped Terminals: Nylon-insulated, with insulation grip and terminal configuration suitable for connection to be made.

2.6 WIRING ACCESSORIES

A. Electrical Tape:
1. Vinyl Insulating Electrical Tape: Complying with ASTM D3005 and listed as complying with UL 510; minimum thickness of 7 mil; resistant to abrasion, corrosion, and sunlight; conformable for application down to 0 degrees F and suitable for continuous temperature environment up to 221 degrees F.
2. Rubber Splicing Electrical Tape: Ethylene Propylene Rubber (EPR) tape, complying with ASTM D4388; minimum thickness of 30 mil; suitable for continuous temperature environment up to 194 degrees F and short-term 266 degrees F overload service.
3. Electrical Filler Tape: Rubber-based insulating moldable putty, minimum thickness of 125 mil; suitable for continuous temperature environment up to 176 degrees F.
4. Varnished Cambric Electrical Tape: Cotton cambric fabric tape, with or without adhesive, oil-primed and coated with high-grade insulating varnish; minimum thickness of 7 mil; suitable for continuous temperature environment up to 221 degrees F.
5. Moisture Sealing Electrical Tape: Insulating mastic compound laminated to flexible, all-weather vinyl backing; minimum thickness of 90 mil.

B. Heat Shrink Tubing: Heavy-wall, split-resistant, with factory-applied adhesive; rated 600 V; suitable for direct burial applications; listed as complying with UL 486D.

C. Oxide Inhibiting Compound: Listed; suitable for use with the conductors or cables to be installed.

D. Wire Pulling Lubricant: Listed; suitable for use with the conductors or cables to be installed and suitable for use at the installation temperature.

PART 3 EXECUTION

3.1 INSTALLATION

A. Circuiting Requirements:
1. Include circuit lengths required to install connected devices within 10 ft of location shown.
2. Maintain separation of Class 1, Class 2, and Class 3 remote-control, signaling, and power-limited circuits in accordance with NFPA 70.
3. Maintain separation of wiring for emergency systems in accordance with NFPA 70.
4. Common Neutrals: Unless otherwise indicated, sharing of neutral/grounded conductors among up to three single phase branch circuits of different phases installed in the same raceway is not permitted. Provide dedicated neutral/grounded conductor for each individual branch circuit.

B. Install products in accordance with manufacturer's instructions.

C. Install conductors and cable in a neat and workmanlike manner in accordance with NECA 1.

D. Install metal-clad cable (Type MC) in accordance with NECA 120.

E. Direct Burial Cable Installation:
   1. Provide trenching and backfilling in accordance with Sections 31 2316 and 31 2323.

F. Secure and support conductors and cables in accordance with NFPA 70 using suitable supports and methods approved by the authority having jurisdiction. Provide independent support from building structure. Do not provide support from raceways, piping, ductwork, or other systems.

G. Terminate cables using suitable fittings.

H. Install conductors with a minimum of 12 inches of slack at each outlet.

I. Make wiring connections using specified wiring connectors.

J. Insulate splices and taps that are made with uninsulated connectors using methods suitable for the application, with insulation and mechanical strength at least equivalent to unspliced conductors.

K. Install firestopping to preserve fire resistance rating of partitions and other elements, using materials and methods specified in Section 07 8400.

L. Unless specifically indicated to be excluded, provide final connections to all equipment and devices, including those furnished by others, as required for a complete operating system.

END OF SECTION

SECTION 26 0526 - GROUNDING AND BONDING FOR ELECTRICAL SYSTEMS

PART 1 GENERAL

1.1 SUBMITTALS

A. Product Data: Provide manufacturer's standard catalog pages and data sheets for grounding and bonding system components.

B. Field quality control test reports.

C. Qualification Data: For testing agency and testing agency's field supervisor

1.2 QUALITY ASSURANCE

A. Conform to requirements of NFPA 70.

PART 2 PRODUCTS

2.1 GROUNDING AND BONDING REQUIREMENTS

A. Do not use products for applications other than as permitted by NFPA 70 and product listing.

B. Unless specifically indicated to be excluded, provide all required components, conductors, connectors, conduit, boxes, fittings, supports, accessories, etc. as necessary for a complete grounding and bonding system.

C. Where conductor size is not indicated, size to comply with NFPA 70, but not less than applicable minimum size requirements specified.

D. Grounding Electrode System:
   1. Provide connection to required and supplemental grounding electrodes indicated to form grounding electrode system.
      a. Provide continuous grounding electrode conductors without splice or joint.
      b. Install grounding electrode conductors in raceway where exposed to physical damage. Bond grounding electrode conductor to metallic raceways at each end with bonding jumper.
   2. Metal Underground Water Pipe(s):
      a. Provide connection to underground metal domestic and fire protection (where present) water service pipe(s) that are in direct contact with earth for at least 10 feet at an accessible location not more than 5 feet from the point of entrance to the building.
      b. Provide bonding jumper(s) around insulating joints/pipes as required to make pipe electrically continuous.
      c. Provide bonding jumper around water meter of sufficient length to permit removal of meter without disconnecting jumper.
   3. Metal Building or Structure Frame:
      a. Provide connection to metal building or structure frame effectively grounded in accordance with NFPA 70 at nearest accessible location.
   4. Concrete-Encased Electrode:
      a. Provide connection to concrete-encased electrode consisting of not less than 20 feet of either steel reinforcing bars or bare copper conductor not smaller than 4 AWG embedded within concrete foundation or footing that is in direct contact with earth in accordance with NFPA 70.
   5. Ground Rod Electrode(s):
      a. Provide three electrodes in an equilateral triangle configuration unless otherwise indicated or required.
      b. Space electrodes not less than 10 feet from each other and any other ground electrode.

E. Lightning Protection Systems, in Addition to Requirements of Section 26 4113:
   1. Do not use grounding electrode dedicated for lightning protection system for component of building grounding electrode system provided under this section.

2. Provide bonding of building grounding electrode system provided under this section and lightning protection grounding electrode system in accordance with NFPA 70 and NFPA 780.

2.2 GROUNDING AND BONDING COMPONENTS

A. General Requirements:
   1. Provide products listed, classified, and labeled as suitable for the purpose intended.
   2. Provide products listed and labeled as complying with UL 467 where applicable.

B. Conductors for Grounding and Bonding, in addition to requirements of Section 26 0519:
   1. Use insulated copper conductors unless otherwise indicated.
      a. Exceptions:
         1) Use bare copper conductors where installed underground in direct contact with earth.
         2) Use bare copper conductors where directly encased in concrete (not in raceway).

C. Connectors for Grounding and Bonding:
   1. Description: Connectors appropriate for the application and suitable for the conductors and items to be connected; listed and labeled as complying with UL 467.
   2. Unless otherwise indicated, use exothermic welded connections for underground, concealed and other inaccessible connections.
   3. Unless otherwise indicated, use mechanical connectors, compression connectors, or exothermic welded connections for accessible connections.

D. Ground Bars:
   1. Description: Copper rectangular ground bars with mounting brackets and insulators.
   2. Size: As indicated.
   3. Holes for Connections: As indicated or as required for connections to be made.

E. Ground Rod Electrodes:
   1. Comply with NEMA GR 1.
   2. Material: Copper-bonded (copper-clad) steel.
   3. Size: 3/4 inch diameter by 10 feet length, unless otherwise indicated.

F. Ground Plate Electrodes:
   1. Material: Copper.
   2. Size: 24 by 24 by 1/4 inches, unless otherwise indicated.

PART 3 EXECUTION

3.1 INSTALLATION

A. Install products in accordance with manufacturer's instructions.

B. Install grounding and bonding system components in a neat and workmanlike manner in accordance with NECA 1.

C. Ground Rod Electrodes: Unless otherwise indicated, install ground rod electrodes vertically. Where encountered rock prohibits vertical installation, install at 45 degree angle or bury horizontally in trench at least 30 inches (750 mm) deep in accordance with NFPA 70 or provide ground plates.

D. Ground Plate Electrodes: Unless otherwise indicated, install ground plate electrodes at a depth of not less than 30 inches.

E. Make grounding and bonding connections using specified connectors.
   1. Remove nonconductive paint, enamel, or similar coating at threads, contact points, and contact surfaces.

END OF SECTION

SECTION 26 0529 - HANGERS AND SUPPORTS FOR ELECTRICAL SYSTEMS

PART 1 GENERAL

1.1 SUBMITTALS

A. Product Data: Provide manufacturer's standard catalog pages and data sheets for metal channel (strut) framing systems, non-penetrating rooftop supports, and post-installed concrete and masonry anchors.

1.2 QUALITY ASSURANCE

A. Comply with NFPA 70.

B. Comply with applicable building code.

PART 2 PRODUCTS

2.1 SUPPORT AND ATTACHMENT COMPONENTS

A. General Requirements:
   1. Provide all required hangers, supports, anchors, fasteners, fittings, accessories, and hardware as necessary for the complete installation of electrical work.
   2. Provide products listed, classified, and labeled as suitable for the purpose intended, where applicable.
   3. Where support and attachment component types and sizes are not indicated, select in accordance with manufacturer's application criteria as required for the load to be supported. Include consideration for vibration, equipment operation, and shock loads where applicable.
   4. Do not use products for applications other than as permitted by NFPA 70 and product listing.
   5. Do not use wire, chain, perforated pipe strap, or wood for permanent supports unless specifically indicated or permitted.
   6. Steel Components: Use corrosion resistant materials suitable for the environment where installed.
      a. Zinc-Plated Steel: Electroplated in accordance with ASTM B633.
      b. Galvanized Steel: Hot-dip galvanized after fabrication in accordance with ASTM A123/A123M or ASTM A153/A153M.

B. Conduit and Cable Supports: Straps, clamps, etc. suitable for the conduit or cable to be supported.
   1. Conduit Straps: One-hole or two-hole type; steel.
   2. Conduit Clamps: Bolted type unless otherwise indicated.

C. Outlet Box Supports: Hangers, brackets, etc. suitable for the boxes to be supported.

D. Metal Channel (Strut) Framing Systems: Factory-fabricated continuous-slot metal channel (strut) and associated fittings, accessories, and hardware required for field-assembly of supports.
   1. Comply with MFMA-4.

E. Hanger Rods: Threaded zinc-plated steel unless otherwise indicated.

F. Non-Penetrating Rooftop Supports for Low-Slope Roofs: Steel pedestals with thermoplastic or rubber bases that rest on top of roofing membrane, not requiring any attachment to the roof structure and not penetrating the roofing assembly, with support fixtures as specified.
   1. Base Sizes: As required to distribute load sufficiently to prevent indentation of roofing assembly.
   2. Attachment/Support Fixtures: As recommended by manufacturer, same type as indicated for equivalent indoor hangers and supports.
   3. Mounting Height: Provide minimum clearance of 6 inches under supported component to top of roofing.

G. Anchors and Fasteners:

1. Unless otherwise indicated and where not otherwise restricted, use the anchor and fastener types indicated for the specified applications.
2. Concrete: Use preset concrete inserts, expansion anchors, or screw anchors.
3. Solid or Grout-Filled Masonry: Use expansion anchors or screw anchors.
4. Steel: Use beam clamps, machine bolts, or welded threaded studs.
5. Powder-actuated fasteners are permitted only as follows:
   a. Use only threaded studs; do not use pins.
6. Preset Concrete Inserts: Continuous metal channel (strut) and spot inserts specifically designed to be cast in concrete ceilings, walls, and floors.
   a. Comply with MFMA-4.
   b. Channel Material: Use galvanized steel.
   c. Minimum Channel Thickness: Steel sheet, 12 gage, 0.1046 inch minimum base metal thickness.
   d. Manufacturer: Same as manufacturer of metal channel (strut) framing system.

PART 3 EXECUTION

3.1 INSTALLATION

A. Install products in accordance with manufacturer's instructions.

B. Install support and attachment components in a neat and workmanlike manner in accordance with NECA 1.

C. Provide independent support from building structure. Do not provide support from piping, ductwork, or other systems.

D. Unless specifically indicated or approved by Architect, do not provide support from suspended ceiling support system or ceiling grid.

E. Unless specifically indicated or approved by Architect, do not provide support from roof deck.

F. Do not penetrate or otherwise notch or cut structural members without approval of Structural Engineer.

G. Equipment Support and Attachment:
   1. Use metal fabricated supports or supports assembled from metal channel (strut) to support equipment as required.
   2. Use metal channel (strut) secured to studs to support equipment surface-mounted on hollow stud walls when wall strength is not sufficient to resist pull-out.
   3. Use metal channel (strut) to support surface-mounted equipment in wet or damp locations to provide space between equipment and mounting surface.
   4. Securely fasten floor-mounted equipment. Do not install equipment such that it relies on its own weight for support.

END OF SECTION

SECTION 26 0534 - CONDUIT

PART 1 GENERAL

1.1 SUBMITTALS

A. Product Data: Provide manufacturer's standard catalog pages and data sheets for conduits and fittings.

1.2 QUALITY ASSURANCE

A. Conform to requirements of NFPA 70.

PART 2 PRODUCTS

2.1 CONDUIT APPLICATIONS

A. Do not use conduit and associated fittings for applications other than as permitted by NFPA 70 and product listing.

B. Unless otherwise indicated and where not otherwise restricted, use the conduit types indicated for the specified applications. Where more than one listed application applies, comply with the most restrictive requirements. Where conduit type for a particular application is not specified, use galvanized steel rigid metal conduit.

C. Underground:
   1. Under Slab on Grade: Use galvanized steel rigid metal conduit, intermediate metal conduit (IMC), PVC-coated galvanized steel rigid metal conduit, or rigid PVC conduit.
   2. Exterior, Direct-Buried: Use galvanized steel rigid metal conduit, intermediate metallic conduit (IMC), PVC-coated galvanized steel rigid metal conduit, or rigid PVC conduit.
   3. Exterior, Embedded Within Concrete: Use galvanized steel rigid metal conduit, intermediate metal conduit (IMC), PVC-coated galvanized steel rigid metal conduit, or rigid PVC conduit.
   4. Where rigid polyvinyl (PVC) conduit is provided, transition to galvanized steel rigid metal conduit where emerging from underground.
   5. Where rigid polyvinyl (PVC) conduit larger than 2 inch (53 mm) trade size is provided, use galvanized steel rigid metal conduit elbows for bends.
   6. Where steel conduit is installed in direct contact with earth where soil has a resistivity of less than 2000 ohm-centimeters or is characterized as severely corrosive based on soils report or local experience, use corrosion protection tape to provide supplementary corrosion protection or use PVC-coated galvanized steel rigid metal conduit.
   7. Where steel conduit emerges from concrete into soil, use corrosion protection tape to provide supplementary corrosion protection for a minimum of 4 inches on either side of where conduit emerges or use PVC-coated galvanized steel rigid metal conduit.

D. Embedded Within Concrete:
   1. Within Slab on Grade: Not permitted.
   2. Within Slab Above Ground: Not permitted.
   3. Within Concrete Walls Above Ground: Use galvanized steel rigid metal conduit, intermediate metal conduit (IMC), PVC-coated galvanized steel rigid metal conduit, or rigid PVC conduit.
   4. Where rigid polyvinyl (PVC) conduit is provided, transition to galvanized steel rigid metal conduit where emerging from concrete.
   5. Where electrical metallic tubing (EMT) emerges from concrete into salt air, use corrosion protection tape to provide supplementary corrosion protection for a minimum of 4 inches on either side of where conduit emerges.

E. Concealed Within Masonry Walls: Use galvanized steel rigid metal conduit, intermediate metal conduit (IMC), or electrical metallic tubing (EMT).

F. Concealed Within Hollow Stud Walls: Use galvanized steel rigid metal conduit, intermediate metal conduit (IMC), or electrical metallic tubing (EMT).

G. Concealed Above Accessible Ceilings: Use galvanized steel rigid metal conduit, intermediate metal conduit (IMC), or electrical metallic tubing (EMT).

H. Interior, Damp or Wet Locations: Use galvanized steel rigid metal conduit or intermediate metal conduit (IMC).

I. Exposed, Interior, Not Subject to Physical Damage: Use galvanized steel rigid metal conduit, intermediate metal conduit (IMC), or electrical metallic tubing (EMT).

J. Exposed, Interior, Subject to Physical Damage: Use galvanized steel rigid metal conduit or intermediate metal conduit (IMC).
   1. Locations subject to physical damage include, but are not limited to:
      a. Where exposed below 8 feet, except within electrical and communication rooms or closets.

K. Exposed, Exterior: Use galvanized steel rigid metal conduit, intermediate metal conduit (IMC), or PVC-coated galvanized steel rigid metal conduit.

L. Concealed, Exterior, Not Embedded in Concrete or in Contact With Earth: Use galvanized steel rigid metal conduit or intermediate metal conduit (IMC).

M. Corrosive Locations Above Ground: Use PVC-coated galvanized steel rigid metal conduit or aluminum rigid metal conduit.

N. Hazardous (Classified) Locations: Use galvanized steel rigid metal conduit, intermediate metal conduit (IMC), aluminum rigid metal conduit, or PVC-coated galvanized steel rigid metal conduit.

O. Connections to Luminaires Above Accessible Ceilings: Use flexible metal conduit.

P. Connections to Vibrating Equipment:
   1. Dry Locations: Use flexible metal conduit.
   2. Damp, Wet, or Corrosive Locations: Use liquidtight flexible metal conduit.
   3. Maximum Length: 6 feet unless otherwise indicated.
   4. Vibrating equipment includes, but is not limited to:
      a. Transformers.
      b. Motors.

2.2 CONDUIT REQUIREMENTS

A. Provide all conduit, fittings, supports, and accessories required for a complete raceway system.

B. Provide products listed, classified, and labeled as suitable for the purpose intended.

C. Minimum Conduit Size, Unless Otherwise Indicated:
   1. Branch Circuits: 3/4 inch (21 mm) trade size.
   2. Branch Circuit Homeruns: 3/4 inch (21 mm) trade size.
   3. Flexible Connections to Luminaires: 1/2 inch (16 mm) trade size.
   4. Underground, Interior: 1 inch (27 mm) trade size.
   5. Underground, Exterior: 1 inch (27 mm) trade size.

D. Where conduit size is not indicated, size to comply with NFPA 70 but not less than applicable minimum size requirements specified.

2.3 GALVANIZED STEEL RIGID METAL CONDUIT (RMC)

A. Description: NFPA 70, Type RMC galvanized steel rigid metal conduit complying with ANSI C80.1 and listed and labeled as complying with UL 6.

B. Fittings:
   1. Non-Hazardous Locations: Use fittings complying with NEMA FB 1 and listed and labeled as complying with UL 514B.
   2. Material: Use steel or malleable iron.
   3. Connectors and Couplings: Use threaded type fittings only. Threadless set screw and compression (gland) type fittings are not permitted.

2.4 INTERMEDIATE METAL CONDUIT (IMC)

A. Description: NFPA 70, Type IMC galvanized steel intermediate metal conduit complying with ANSI C80.6 and listed and labeled as complying with UL 1242.

B. Fittings:
   1. Non-Hazardous Locations: Use fittings complying with NEMA FB 1 and listed and labeled as complying with UL 514B.
   2. Hazardous (Classified) Locations: Use fittings listed and labeled as complying with UL 1203 for the classification of the installed location.
   3. Material: Use steel or malleable iron.
   4. Connectors and Couplings: Use threaded type fittings only. Threadless set screw and compression (gland) type fittings are not permitted.

2.5 PVC-COATED GALVANIZED STEEL RIGID METAL CONDUIT (RMC)

A. Description: NFPA 70, Type RMC galvanized steel rigid metal conduit with external polyvinyl chloride (PVC) coating complying with NEMA RN 1 and listed and labeled as complying with UL 6.

B. Exterior Coating: Polyvinyl chloride (PVC), nominal thickness of 40 mil.

C. PVC-Coated Fittings:
   1. Manufacturer: Same as manufacturer of PVC-coated conduit to be installed.
   2. Non-Hazardous Locations: Use fittings listed and labeled as complying with UL 514B.
   3. Hazardous (Classified) Locations: Use fittings listed and labeled as complying with UL 1203 for the classification of the installed location.
   4. Material: Use steel or malleable iron.
   5. Exterior Coating: Polyvinyl chloride (PVC), minimum thickness of 40 mil.

D. PVC-Coated Supports: Furnish with exterior coating of polyvinyl chloride (PVC), minimum thickness of 15 mil.

2.6 FLEXIBLE METAL CONDUIT (FMC)

A. Description: NFPA 70, Type FMC standard wall steel flexible metal conduit listed and labeled as complying with UL 1, and listed for use in classified firestop systems to be used.

B. Fittings:
   1. Description: Fittings complying with NEMA FB 1 and listed and labeled as complying with UL 514B.
   2. Material: Use steel or malleable iron.

2.7 LIQUIDTIGHT FLEXIBLE METAL CONDUIT (LFMC)

A. Description: NFPA 70, Type LFMC polyvinyl chloride (PVC) jacketed steel flexible metal conduit listed and labeled as complying with UL 360.

B. Fittings:
   1. Description: Fittings complying with NEMA FB 1 and listed and labeled as complying with UL 514B.
   2. Material: Use steel or malleable iron.

2.8 ELECTRICAL METALLIC TUBING (EMT)

A. Description: NFPA 70, Type EMT steel electrical metallic tubing complying with ANSI C80.3 and listed and labeled as complying with UL 797.

B. Fittings:
   1. Description: Fittings complying with NEMA FB 1 and listed and labeled as complying with UL 514B.
   2. Material: Use steel or malleable iron.
   3. Connectors and Couplings: Use compression (gland) or set-screw type.
      a. Do not use indenter type connectors and couplings.

2.9 RIGID POLYVINYL CHLORIDE (PVC) CONDUIT

A. Description: NFPA 70, Type PVC rigid polyvinyl chloride conduit complying with NEMA TC 2 and listed and labeled as complying with UL 651; Schedule 40 unless otherwise indicated, Schedule 80 where subject to physical damage; rated for use with conductors rated 90 degrees C.

B. Fittings:
   1. Manufacturer: Same as manufacturer of conduit to be connected.
   2. Description: Fittings complying with NEMA TC 3 and listed and labeled as complying with UL 651; material to match conduit.

2.10 ACCESSORIES

A. Corrosion Protection Tape: PVC-based, minimum thickness of 20 mil.

B. Conduit Joint Compound: Corrosion-resistant, electrically conductive; suitable for use with the conduit to be installed.

C. Pull Strings: Use nylon cord with average breaking strength of not less than 200 pound-force.

D. Modular Seals for Conduit Penetrations: Rated for minimum of 40 psig; Suitable for the conduits to be installed.

PART 3 EXECUTION

3.1 INSTALLATION

A. Install products in accordance with manufacturer's instructions.

B. Install conduit in a neat and workmanlike manner in accordance with NECA 1.

C. Install galvanized steel rigid metal conduit (RMC) in accordance with NECA 101.

D. Install intermediate metal conduit (IMC) in accordance with NECA 101.

E. Install PVC-coated galvanized steel rigid metal conduit (RMC) using only tools approved by the manufacturer.

F. Install rigid polyvinyl chloride (PVC) conduit in accordance with NECA 111.

G. Conduit Routing:
   1. Conceal all conduits unless specifically indicated to be exposed.
   2. Conduits in the following areas may be exposed, unless otherwise indicated:
      a. Electrical rooms.
      b. Mechanical equipment rooms.
      c. Within joists in areas with no ceiling.
   3. Unless otherwise approved, do not route conduits exposed:
      a. Across floors.
      b. Across roofs.
      c. Across top of parapet walls.
      d. Across building exterior surfaces.
   4. Arrange conduit to provide no more than the equivalent of four 90 degree bends between pull points.
   5. Arrange conduit to provide no more than 150 feet between pull points.
   6. Route conduits above water and drain piping where possible.
   7. Arrange conduit to prevent moisture traps. Provide drain fittings at low points and at sealing fittings where moisture may collect.
   8. Maintain minimum clearance of 6 inches between conduits and piping for other systems.
   9. Maintain minimum clearance of 12 inches between conduits and hot surfaces.

H. Conduit Support:
   1. Secure and support conduits in accordance with NFPA 70 and Section 26 0529 using suitable supports and methods approved by the authority having jurisdiction.

2. Provide independent support from building structure. Do not provide support from piping, ductwork, or other systems.
3. Installation Above Suspended Ceilings: Do not provide support from ceiling support system. Do not provide support from ceiling grid or allow conduits to lay on ceiling tiles.
4. Use conduit strap to support single surface-mounted conduit.
   a. Use clamp back spacer with conduit strap for damp and wet locations to provide space between conduit and mounting surface.
5. Use metal channel (strut) with accessory conduit clamps to support multiple parallel surface-mounted conduits.
6. Use conduit clamp to support single conduit from beam clamp or threaded rod.
7. Use trapeze hangers assembled from threaded rods and metal channel (strut) with accessory conduit clamps to support multiple parallel suspended conduits.
8. Use non-penetrating rooftop supports to support conduits routed across rooftops (only where approved).
9. Use of spring steel conduit clips for support of conduits is not permitted.
10. Use of wire for support of conduits is not permitted.
11. Where conduit support intervals specified in NFPA 70 and NECA standards differ, comply with the most stringent requirements.

I. Connections and Terminations:
1. Use approved zinc-rich paint or conduit joint compound on field-cut threads of galvanized steel conduits prior to making connections.
2. Where two threaded conduits must be joined and neither can be rotated, use three-piece couplings or split couplings. Do not use running threads.
3. Provide drip loops for liquidtight flexible conduit connections to prevent drainage of liquid into connectors.
4. Terminate threaded conduits in boxes and enclosures using threaded hubs or double lock nuts for dry locations and raintight hubs for wet locations.
5. Where spare conduits stub up through concrete floors and are not terminated in a box or enclosure, provide threaded couplings equipped with threaded plugs set flush with finished floor.
6. Provide insulating bushings or insulated throats at all conduit terminations to protect conductors.

J. Penetrations:
1. Do not penetrate or otherwise notch or cut structural members, including footings and grade beams, without approval of Structural Engineer.
2. Provide sleeves for penetrations as indicated or as required to facilitate installation. Set sleeves flush with exposed surfaces unless otherwise indicated or required.
3. Seal interior of conduits entering the building from underground at first accessible point to prevent entry of moisture and gases.
4. Where conduits penetrate waterproof membrane, seal as required to maintain integrity of membrane.
5. Make penetrations for roof-mounted equipment within associated equipment openings and curbs where possible to minimize roofing system penetrations. Where penetrations are necessary, seal as indicated or as required to preserve integrity of roofing system and maintain roof warranty. Include proposed locations of penetrations and methods for sealing with submittals.
6. Install firestopping to preserve fire resistance rating of partitions and other elements, using materials and methods specified in Section 07 8400.

K. Underground Installation:
1. Provide trenching and backfilling in accordance with Sections 31 2316 and 31 2323.

L. Embedment Within Structural Concrete Slabs (only where approved by Structural Engineer):

M. Concrete Encasement: Where conduits not otherwise embedded within concrete are indicated to be concrete-encased, provide concrete in accordance with Section 03 3000 with minimum concrete cover of 3 inches on all sides unless otherwise indicated.

N. Hazardous (Classified) Locations: Where conduits cross boundaries of hazardous (classified) locations, provide sealing fittings located as indicated or in accordance with NFPA 70.

O. Conduit Movement Provisions: Where conduits are subject to movement, provide expansion and expansion/deflection fittings to prevent damage to enclosed conductors or connected equipment. This includes, but is not limited to:
   1. Where conduits cross structural joints intended for expansion, contraction, or deflection.
   2. Where conduits are subject to earth movement by settlement or frost.

P. Condensation Prevention: Where conduits cross barriers between areas of potential substantial temperature differential, provide sealing fitting or approved sealing compound at an accessible point near the penetration to prevent condensation. This includes, but is not limited to:
   1. Where conduits pass from outdoors into conditioned interior spaces.
   2. Where conduits pass from unconditioned interior spaces into conditioned interior spaces.

END OF SECTION

SECTION 26 0537 - BOXES

PART 1 GENERAL

1.1 SUBMITTALS

A. Product Data: Provide manufacturer's standard catalog pages and data sheets for cabinets and enclosures, boxes for hazardous (classified) locations, floor boxes, and underground boxes/enclosures.

1.2 QUALITY ASSURANCE

A. Conform to requirements of NFPA 70.

PART 2 PRODUCTS

2.1 BOXES

A. General Requirements:
   1. Do not use boxes and associated accessories for applications other than as permitted by NFPA 70 and product listing.
   2. Provide all boxes, fittings, supports, and accessories required for a complete raceway system and to accommodate devices and equipment to be installed.
   3. Provide products listed, classified, and labeled as suitable for the purpose intended.
   4. Where box size is not indicated, size to comply with NFPA 70 but not less than applicable minimum size requirements specified.
   5. Provide grounding terminals within boxes where equipment grounding conductors terminate.

B. Outlet and Device Boxes Up to 100 cubic inches, Including Those Used as Junction and Pull Boxes:
   1. Use sheet-steel boxes for dry locations unless otherwise indicated or required.
   2. Use cast iron boxes or cast aluminum boxes for damp or wet locations unless otherwise indicated or required; furnish with compatible weatherproof gasketed covers.
   3. Use suitable concrete type boxes where flush-mounted in concrete.
   4. Use suitable masonry type boxes where flush-mounted in masonry walls.
   5. Use raised covers suitable for the type of wall construction and device configuration where required.
   6. Use shallow boxes where required by the type of wall construction.
   7. Do not use "through-wall" boxes designed for access from both sides of wall.
   8. Sheet-Steel Boxes: Comply with NEMA OS 1, and list and label as complying with UL 514A.
   9. Cast Metal Boxes: Comply with NEMA FB 1, and list and label as complying with UL 514A; furnish with threaded hubs.
   10. Boxes for Supporting Luminaires and Ceiling Fans: Listed as suitable for the type and weight of load to be supported; furnished with fixture stud to accommodate mounting of luminaire where required.
   11. Boxes for Ganged Devices: Use multigang boxes of single-piece construction. Do not use field-connected gangable boxes.

C. Cabinets and Enclosures, Including Junction and Pull Boxes Larger Than 100 cubic inches:
   1. Comply with NEMA 250, and list and label as complying with UL 50 and UL 50E, or UL 508A.
   2. Junction and Pull Boxes Larger Than 100 cubic inches:
      a. Provide screw-cover or hinged-cover enclosures unless otherwise indicated.

D. Floor Boxes:
   1. Description: Floor boxes compatible with floor box service fittings provided in accordance with Section 26 2726; with partitions to separate multiple services; furnished with all components, adapters, and trims required for complete installation.
   2. Manufacturer: Same as manufacturer of floor box service fittings.

PART 3 EXECUTION

3.1 INSTALLATION

A. Install products in accordance with manufacturer's instructions.

B. Perform work in a neat and workmanlike manner in accordance with NECA 1 and, where applicable, NECA 130, including mounting heights specified in those standards where mounting heights are not indicated.

C. Arrange equipment to provide minimum clearances in accordance with manufacturer's instructions and NFPA 70.

D. Provide separate boxes for emergency power and normal power systems.

E. Unless otherwise indicated, provide separate boxes for line voltage and low voltage systems.

F. Flush-mount boxes in finished areas unless specifically indicated to be surface-mounted.

G. Box Locations:
   1. Locate boxes to be accessible. Provide access panels in accordance with Section 08 3100 as required where approved by the Architect.
   2. Locate boxes so that wall plates do not span different building finishes.
   3. Locate boxes so that wall plates do not cross masonry joints.
   4. Unless otherwise indicated, where multiple outlet boxes are installed at the same location at different mounting heights, install along a common vertical center line.
   5. Do not install flush-mounted boxes on opposite sides of walls back-to-back. Provide minimum 6 inches horizontal separation unless otherwise indicated.
   6. Fire-Resistance-Rated Walls: Install flush-mounted boxes such that the required fire-resistance will not be reduced.
   7. Locate junction and pull boxes as indicated, as required to facilitate installation of conductors, and to limit conduit length and/or number of bends between pulling points in accordance with Section 26 0534.
   8. Locate junction and pull boxes in the following areas, unless otherwise indicated:
      a. Concealed above accessible suspended ceilings.
      b. Within joists in areas with no ceiling.
      c. Electrical rooms.
      d. Mechanical equipment rooms.

H. Box Supports:
   1. Secure and support boxes in accordance with NFPA 70 and Section 26 0529 using suitable supports and methods approved by the authority having jurisdiction.
   2. Provide independent support from building structure except for cast metal boxes (other than boxes used for fixture support) supported by threaded conduit connections in accordance with NFPA 70. Do not provide support from piping, ductwork, or other systems.
   3. Installation Above Suspended Ceilings: Do not provide support from ceiling grid or ceiling support system.

I. Install boxes as required to preserve insulation integrity.

J. Install permanent barrier between ganged wiring devices when voltage between adjacent devices exceeds 300 V.

K. Install firestopping to preserve fire resistance rating of partitions and other elements, using materials and methods specified in Section 07 8400.

END OF SECTION

SECTION 26 0553 - IDENTIFICATION FOR ELECTRICAL SYSTEMS

PART 1 GENERAL

1.1 SUBMITTALS

A. Product Data: Provide manufacturer's standard catalog pages and data sheets for each product.

1.2 QUALITY ASSURANCE

A. Conform to requirements of NFPA 70.

PART 2 PRODUCTS

2.1 IDENTIFICATION REQUIREMENTS

A. Identification for Equipment:
   1. Use identification nameplate to identify each piece of electrical distribution and control equipment and associated sections, compartments, and components.
      a. Switchboards:
         1) Identify ampere rating.
         2) Identify voltage and phase.
         3) Identify power source and circuit number. Include location when not within sight of equipment.
         4) Use identification nameplate to identify load(s) served for each branch device. Do not identify spares and spaces.
      b. Panelboards:
         1) Identify power source and circuit number. Include location when not within sight of equipment.
         2) Use typewritten circuit directory to identify load(s) served for panelboards with a door. Identify spares and spaces using pencil.
         3) For power panelboards without a door, use identification nameplate to identify load(s) served for each branch device. Do not identify spares and spaces.
      c. Transformers:
      d. Enclosed switches, circuit breakers, and motor controllers:
         1) Identify power source and circuit number. Include location when not within sight of equipment.
      e. Transfer Switches:
   2. Service Equipment:
      a. Use identification nameplate to identify each service disconnecting means.
      b. Use identification nameplate at each piece of service equipment to identify the available fault current and the date calculations were performed.
   3. Emergency System Equipment:
      a. Use identification nameplate or voltage marker to identify emergency system equipment in accordance with NFPA 70.
      b. Use identification nameplate at each piece of service equipment to identify type and location of on-site emergency power sources.

B. Identification for Conductors and Cables:
   1. Color Coding for Power Conductors 600 V and Less: Comply with Section 26 0519.
   2. Use identification nameplate or identification label to identify color code for ungrounded and grounded power conductors inside door or enclosure at each piece of feeder or branch-circuit distribution equipment when premises has feeders or branch circuits served by more than one nominal voltage system.

C. Identification for Raceways:

D. Identification for Boxes:

E. Identification for Devices:
   1. Identification for Communications Devices: Comply with Section 27 1005.

2. Wiring Device and Wallplate Finishes: Comply with Section 26 2726.
3. Use identification label to identify fire alarm system devices.

2.2 IDENTIFICATION NAMEPLATES AND LABELS

A. Identification Nameplates:
1. Materials:
a. Indoor Clean, Dry Locations: Use plastic nameplates.
b. Outdoor Locations: Use plastic, stainless steel, or aluminum nameplates suitable for exterior use.
2. Plastic Nameplates: Two-layer or three-layer laminated acrylic or electrically non-conductive phenolic with beveled edges; minimum thickness of 1/16 inch; engraved text.
a. Exception: Provide minimum thickness of 1/8 inch when any dimension is greater than 4 inches.
3. Stainless Steel Nameplates: Minimum thickness of 1/32 inch; engraved or laser-etched text.
4. Aluminum Nameplates: Anodized; minimum thickness of 1/32 inch; engraved or laser-etched text.

B. Identification Labels:
1. Materials: Use self-adhesive laminated plastic labels; UV, chemical, water, heat, and abrasion resistant.
2. Text: Use factory pre-printed or machine-printed text. Do not use handwritten text unless otherwise indicated.

2.3 WIRE AND CABLE MARKERS

A. Markers for Conductors and Cables: Use wrap-around self-adhesive vinyl cloth, wrap-around self-adhesive vinyl self-laminating, heat-shrink sleeve, plastic sleeve, plastic clip-on, or vinyl split sleeve type markers suitable for the conductor or cable to be identified.

B. Markers for Conductor and Cable Bundles: Use plastic marker tags secured by nylon cable ties.

C. Legend: Power source and circuit number or other designation indicated.

D. Text: Use factory pre-printed or machine-printed text, all capitalized unless otherwise indicated.

E. Minimum Text Height: 1/8 inch.

F. Color: Black text on white background unless otherwise indicated.

2.4 VOLTAGE MARKERS

A. Minimum Size:

B. Legend:

C. Color: Black text on orange background unless otherwise indicated.

2.5 UNDERGROUND WARNING TAPE

A. Materials: Use non-detectable type polyethylene tape suitable for direct burial, unless otherwise indicated.

B. Non-detectable Type Tape: 6 inches wide, with minimum thickness of 4 mil.

C. Legend: Type of service, continuously repeated over full length of tape.

D. Color:

2.6 WARNING SIGNS AND LABELS

A. Comply with ANSI Z535.2 or ANSI Z535.4 as applicable.

B. Warning Signs:
1. Materials:
2. Minimum Size: 7 by 10 inches unless otherwise indicated.

C. Warning Labels:
   1. Materials: Use factory pre-printed or machine-printed self-adhesive polyester or self-adhesive vinyl labels; UV, chemical, water, heat, and abrasion resistant; produced using materials recognized to UL 969.
   2. Machine-Printed Labels: Use thermal transfer process printing machines and accessories recommended by label manufacturer.
   3. Minimum Size: 2 by 4 inches unless otherwise indicated.

PART 3 EXECUTION

3.1 INSTALLATION

A. Install products in accordance with manufacturer's instructions.

B. Secure nameplates to exterior surfaces of enclosures using stainless steel screws and to interior surfaces using self-adhesive backing or epoxy cement.

C. Install underground warning tape above buried lines with one tape per trench at 3 inches below finished grade.

END OF SECTION

SECTION 26 0573 - OVERCURRENT PROTECTIVE DEVICE COORDINATION STUDY

PART 1 GENERAL

1.01 SUBMITTALS

PART 2 PRODUCTS

2.1 PROTECTIVE DEVICES

A. Provide protective devices of ratings and settings as required so that the protective device closest to the fault will open first.

B. In addition to requirements specified elsewhere, provide overcurrent protective devices having ratings and settings in accordance with results of this analysis.

PART 3 EXECUTION

END OF SECTION

SECTION 26 0923 - LIGHTING CONTROL DEVICES

PART 1 GENERAL

1.1 SUBMITTALS

A. Product Data: Include ratings, configurations, standard wiring diagrams, dimensions, colors, service condition requirements, and installed features.
   1. Occupancy Sensors: Include detailed motion detection coverage range diagrams.

1.2 QUALITY ASSURANCE

A. Conform to requirements of NFPA 70.

1.3 WARRANTY

A. See Section 01 7800 - Closeout Submittals, for additional warranty requirements.

B. Provide five year manufacturer warranty for all occupancy sensors.

C. Provide five year manufacturer warranty for utility grade locking receptacle-mounted outdoor photo controls.

D. Provide two year manufacturer warranty for all daylighting controls.

PART 2 PRODUCTS

2.1 LIGHTING CONTROL DEVICES - GENERAL REQUIREMENTS

A. Provide products listed, classified, and labeled as suitable for the purpose intended.

B. Unless specifically indicated to be excluded, provide all required conduit, wiring, connectors, hardware, components, accessories, etc. as required for a complete operating system.

C. Products for Switching of Electronic Fluorescent Ballasts: Tested and rated to be suitable for peak inrush currents specified in NEMA 410.

2.2 OCCUPANCY SENSORS

A. All Occupancy Sensors:
   1. Description: Factory-assembled commercial specification grade devices for indoor use capable of sensing both major motion, such as walking, and minor motion, such as small desktop level movements, according to published coverage areas, for automatic control of load indicated.
   2. Turn-Off Delay: Field adjustable, with time delay settings up to 30 minutes.
   3. Compatibility (Non-Dimming Sensors): Suitable for controlling incandescent lighting, low-voltage lighting with electronic and magnetic transformers, fluorescent lighting with electronic and magnetic ballasts, and fractional motor loads, with no minimum load requirements.

B. Wall Switch Occupancy Sensors:
   1. All Wall Switch Occupancy Sensors:
      a. Description: Occupancy sensors designed for installation in standard wall box at standard wall switch mounting height with a field of view of 180 degrees, integrated manual control capability, and no leakage current to load in off mode.

C. Ceiling Mounted Occupancy Sensors:
   1. All Ceiling Mounted Occupancy Sensors:
      a. Description: Low profile occupancy sensors designed for ceiling installation.

D. Power Packs for Low Voltage Occupancy Sensors:
   1. Description: Plenum rated, self-contained low voltage class 2 transformer and relay compatible with specified low voltage occupancy sensors for switching of line voltage loads.
   2. Provide quantity and configuration of power and slave packs with all associated wiring and accessories as required to control the load indicated on the drawings.
   3. Input Supply Voltage: Dual rated for 120/277 V ac.
   4. Load Rating: As required to control the load indicated on the drawings.

2.3 DAYLIGHTING CONTROLS

A. System Description: Control system consisting of photo sensors and compatible control modules and power packs, contactors, or relays as required for automatic control of load indicated according to available natural light; capable of integrating with occupancy sensors and manual override controls.

PART 3 EXECUTION

3.1 INSTALLATION

A. Perform work in a neat and workmanlike manner in accordance with NECA 1 and, where applicable, NECA 130, including mounting heights specified in those standards unless otherwise indicated.

B. Coordinate locations of outlet boxes provided under Section 26 0537 as required for installation of lighting control devices provided under this section.

C. Install lighting control devices in accordance with manufacturer's instructions.

D. Unless otherwise indicated, connect lighting control device grounding terminal or conductor to branch circuit equipment grounding conductor and to outlet box with bonding jumper.

E. Where required and not furnished with lighting control device, provide wall plate in accordance with Section 26 2726.

F. Occupancy Sensor Locations:

END OF SECTION

SECTION 26 2100 - LOW-VOLTAGE ELECTRICAL SERVICE ENTRANCE

PART 1 GENERAL

1.1 SUBMITTALS

A. Product Data: Provide manufacturer's standard catalog pages and data sheets for each product. Include ratings, configurations, standard wiring diagrams, outline and support point dimensions, finishes, weights, service condition requirements, and installed features.

B. Drawings prepared by Utility Company.

1.2 QUALITY ASSURANCE

A. Comply with the following:
   1. IEEE C2 (National Electrical Safety Code).
   2. NFPA 70 (National Electrical Code).
   3. The requirements of the Utility Company.

PART 2 PRODUCTS

2.1 ELECTRICAL SERVICE REQUIREMENTS

A. Provide new electrical service consisting of all required conduits, conductors, equipment, metering provisions, supports, accessories, etc. as necessary for connection between Utility Company point of supply and service entrance equipment.

B. Electrical Service Characteristics:
   1. Service Type: Underground.
   2. Service Voltage: 480Y/277 V, 3 phase, 60 Hz.

C. Utility Company: As indicated on drawings.

D. Products Furnished by xxx: Comply with Utility Company requirements.

PART 3 EXECUTION

3.1 INSTALLATION

A. Install products in accordance with manufacturer's instructions and Utility Company requirements.

B. Perform work in a neat and workmanlike manner in accordance with NECA 1.

C. Arrange equipment to provide minimum clearances and required maintenance access.

END OF SECTION

SECTION 26 2416 - PANELBOARDS

PART 1 GENERAL

1.1 SUBMITTALS

A. Product Data: Provide manufacturer's standard catalog pages and data sheets for panelboards, enclosures, overcurrent protective devices, and other installed components and accessories.
   1. Include characteristic trip curves for each type and rating of overcurrent protective device upon request.

B. Qualification Data: For qualified testing agency.

C. Field Quality Control Test Reports.

1.2 QUALITY ASSURANCE

A. Conform to requirements of NFPA 70.

PART 2 PRODUCTS

2.1 PANELBOARDS - GENERAL REQUIREMENTS

A. Provide products listed, classified, and labeled as suitable for the purpose intended.

B. Short Circuit Current Rating:
   1. Provide panelboards with listed short circuit current rating not less than the available fault current at the installed location as indicated on the drawings.

C. Panelboards Used for Service Entrance: Listed and labeled as suitable for use as service equipment according to UL 869A.

D. Mains: Configure for top or bottom incoming feed as indicated or as required for the installation.

E. Bussing: Sized in accordance with UL 67 temperature rise requirements.
   1. Material: Hard-drawn copper, 98 percent conductivity.
   2. Provide 200 percent rated neutral bus unless otherwise indicated, with a suitable lug for each feeder or branch circuit requiring a neutral connection.
   3. Provide solidly bonded equipment ground bus in each panelboard, with a suitable lug for each feeder and branch circuit equipment grounding conductor.

F. Conductor Terminations: Suitable for use with the conductors to be installed.

G. Enclosures: Comply with NEMA 250, and list and label as complying with UL 50 and UL 50E.
   1. Boxes: Galvanized steel unless otherwise indicated.
      a. Provide wiring gutters sized to accommodate the conductors to be installed.
   2. Fronts:
   3. Directory Card: Inside panelboard door, mounted in transparent card holder.
   4. Lockable Doors: All locks keyed alike unless otherwise indicated.

H. Service Equipment Label: NRTL labeled for use as service equipment for panelboards or load centers with one or more main service disconnecting and overcurrent protective devices

I. Future Provisions: Prepare all unused spaces for future installation of devices including bussing, connectors, mounting hardware and all other required provisions.

2.2 POWER DISTRIBUTION PANELBOARDS

A. Description: Panelboards complying with NEMA PB 1, power and feeder distribution type, circuit breaker type, and listed and labeled as complying with UL 67; ratings, configurations and features as indicated on the drawings.

B. Panelboards: NEMA PB 1, power and feeder distribution type.

C. Conductor Terminations:
   1. Main and Neutral Lug Material: Copper, suitable for terminating copper conductors only.
   2. Main and Neutral Lug Type: Mechanical.

D. Bussing:
   1. Phase and Neutral Bus Material: Aluminum.
   2. Ground Bus Material: Aluminum.

E. Enclosures:
   1. Provide surface-mounted or flush-mounted enclosures as indicated.
   2. Fronts: Provide door-in-door trim with hinged cover for access to load terminals and wiring gutters, and separate lockable hinged door with concealed hinges for access to overcurrent protective device handles without exposing live parts.
   3. Provide clear plastic circuit directory holder mounted on inside of door.

2.3 LIGHTING AND APPLIANCE PANELBOARDS

A. Description: Panelboards complying with NEMA PB 1, lighting and appliance branch circuit type, circuit breaker type, and listed and labeled as complying with UL 67; ratings, configurations and features as indicated on the drawings.

B. Conductor Terminations:
   1. Main and Neutral Lug Material: Copper, suitable for terminating copper conductors only.
   2. Main and Neutral Lug Type: Mechanical.

C. Bussing:
   1. Phase and Neutral Bus Material: Aluminum.
   2. Ground Bus Material: Aluminum.

D. Circuit Breakers: Thermal magnetic bolt-on type unless otherwise indicated.

E. Enclosures:
   1. Provide surface-mounted or flush-mounted enclosures as indicated.
   2. Fronts: Provide door-in-door trim with hinged cover for access to load terminals and wiring gutters, and separate lockable hinged door with concealed hinges for access to overcurrent protective device handles without exposing live parts.
   3. Provide clear plastic circuit directory holder mounted on inside of door.

F. Provide column-width panelboards : Narrow gutter extension, with cover, to overhead junction box equipped with ground and neutral terminal buses where indicated.

2.4 OVERCURRENT PROTECTIVE DEVICES

A. Manufacturers:

B. Molded Case Circuit Breakers:
   1. Description: Quick-make, quick-break, over center toggle, trip-free, trip-indicating circuit breakers listed and labeled as complying with UL 489; ratings, configurations, and features as indicated on the drawings.
   2. Thermal-Magnetic Circuit Breakers: Inverse time-current element for low-level overloads, and instantaneous magnetic trip element for short circuits. Adjustable magnetic trip setting for circuit-breaker frame sizes 250 A and larger.
   3. Interrupting Capacity:
      a. Adjustable Instantaneous-Trip Circuit Breakers: Magnetic trip element with front-mounted, field-adjustable trip setting.
   4. Thermal Magnetic Circuit Breakers: For each pole, furnish thermal inverse time tripping element for overload protection and magnetic instantaneous tripping element for short circuit protection.
   5. Electronic Trip Circuit Breakers: Furnish solid state, microprocessor-based, true rms sensing trip units.
      a. Provide the following field-adjustable trip response settings:
         1) Long and short term time pickup, adjustable by setting dial.
         2) Instantaneous pickup.
         3) Ground fault pickup level, time delay and I2t response.

PART 3 EXECUTION

3.1 INSTALLATION

A. Install products in accordance with manufacturer's instructions.

B. Install panelboards securely, in a neat and workmanlike manner in accordance with NECA 407 (panelboards).

C. Arrange equipment to provide minimum clearances in accordance with manufacturer's instructions and NFPA 70.

D. Provide required supports in accordance with Section 26 0529.

E. Mount panelboards such that the highest position of any operating handle for circuit breakers or switches does not exceed 79 inches above the floor or working platform.

F. Mount floor-mounted power distribution panelboards on properly sized 3 inch high concrete pad constructed in accordance with Section 03 3000.

G. Provide minimum of four spare 1 inch trade size conduits out of each flush-mounted panelboard stubbed into accessible space above ceiling and or space designated to be ceiling in the future. Stub four 1-inch empty conduits into raised floor space or below slab not on grade.

H. Provide grounding and bonding in accordance with Section 26 0526.

I. Set field-adjustable circuit breaker tripping function settings as indicated.

J. Provide filler plates to cover unused spaces in panelboards.

END OF SECTION

SECTION 26 2726 - WIRING DEVICES

PART 1 GENERAL

1.1 SUBMITTALS

A. Product Data: Provide manufacturer's catalog information showing dimensions, colors, and configurations.

B. B. Shop Drawings: List of legends and description of materials and process used for premarking wall plates.

C. Samples: One for each type and color of device and wall plate specified.

D. Field Quality Control Test Reports.

1.2 QUALITY ASSURANCE

A. Conform to requirements of NFPA 70.

B. Products: Listed, classified, and labeled as suitable for the purpose intended.

PART 2 PRODUCTS

2.1 WIRING DEVICE APPLICATIONS

A. Provide wiring devices suitable for intended use and with ratings adequate for load served.

B. For single receptacles installed on an individual branch circuit, provide receptacle with ampere rating not less than that of the branch circuit.

C. Provide weather resistant GFI receptacles with specified weatherproof covers for all receptacles installed outdoors or in damp or wet locations.

D. Provide GFI protection for all receptacles installed within 6 feet of sinks.

E. Provide GFI protection for all receptacles serving electric drinking fountains.

F. Unless noted otherwise, do not use combination switch/receptacle devices.

G. For flush floor service fittings, use tile rings for installations in tile floors.

H. For flush floor service fittings, use carpet flanges for installations in carpeted floors.

2.2 WIRING DEVICE FINISHES:

A. Provide wiring device finishes as described below unless otherwise indicated.

B. Wiring Devices, Unless Otherwise Indicated: White with white nylon wall plate.

C. Wiring Devices Connected to Emergency Power: Red with red nylon wall plate.

2.3 WALL SWITCHES

A. Standard Wall Switches: Industrial specification grade, 20 A, 120/277 V with standard toggle type switch actuator and maintained contacts; single pole single throw, double pole single throw, three way, or four way as indicated on the drawings.

B. Pilot Light Wall Switches: Industrial specification grade, 20 A, 120/277 V with red illuminated standard toggle type switch actuator and maintained contacts; illuminated with load on; single pole single throw, double pole single throw, three way, or four way as indicated on the drawings.

C. Locking Wall Switches: Industrial specification grade, 20 A, 120/277 V with lever type keyed switch actuator and maintained contacts; all switches keyed alike; single pole single throw, double pole single throw, three way, or four way as indicated on the drawings.

D. Momentary Contact Wall Switches: Industrial specification grade, 20 A, 120/277 V with toggle type three position switch actuator and momentary contacts; single pole double throw, off with switch actuator in center position.

2.4 WALL DIMMERS

A. All Wall Dimmers: Solid-state with continuous full-range even control following square law dimming curve, integral radio frequency interference filtering, power failure preset memory, air

gap switch accessible without removing wall plate, complying with NEMA WD 1 and NEMA WD 6, and listed as complying with UL 1472; types and ratings suitable for load controlled as indicated on the drawings.

B. Control: Continuously adjustable slider; with single-pole or three-way switching. Comply with UL 1472..

C. Fluorescent Lamp Dimmer Switches: Modular; compatible with dimmer ballasts; trim potentiometer to adjust low-end dimming; dimmer-ballast combination capable of consistent dimming with low end not greater than 20 percent of full brightness.

D. Provide locator light, illuminated with load off.

2.5 FAN SPEED CONTROLLERS

A. Description: 120 V AC, solid-state, full-range variable speed, slide control type with separate on/off switch, with integral radio frequency interference filtering, fan hum elimination circuitry, power failure preset memory, complying with NEMA WD 1 and NEMA WD 6, and listed as complying with UL 1917.
   1. Current Rating: 1.5 A unless otherwise indicated or required to control the load indicated on the drawings.

2.6 RECEPTACLES

A. All Receptacles: Self-grounding, complying with NEMA WD 1 and NEMA WD 6, and listed as complying with UL 498, and where applicable, FS W-C-596; types as indicated on the drawings.
   1. NEMA configurations specified are according to NEMA WD 6.
   2. Hospital Grade Receptacles: Listed as complying with UL 498 Supplement SD, with green dot hospital grade mark on device face.

B. Convenience Receptacles:
   1. Standard Convenience Receptacles: Industrial specification grade, 125 V, 20 A: Comply with NEMA WD 1, NEMA WD 6 configuration 5-20R, and UL 498.; single or duplex as indicated on the drawings.
   2. Isolated Ground Convenience Receptacles: Commercial specification grade, 125 V, 20 A: Comply with NEMA WD 1, NEMA WD 6 configuration 5-20R, and UL 498., with ground contacts isolated from mounting strap; isolated ground triangle mark on device face; single or duplex as indicated on the drawings.
   3. Tamper Resistant Convenience Receptacles: Hospital grade, 125 V, 20 A: Comply with NEMA WD 1, NEMA WD 6 configuration 5-20R, and UL 498., , listed and labeled as tamper resistant type; single or duplex as indicated on the drawings.

C. GFI Receptacles:
   1. All GFI Receptacles: Provide with feed-through protection, light to indicate ground fault tripped condition and loss of protection, and list as complying with NEMA WD 1, NEMA WD 6, UL 498, and UL 943, class A.
   2. Standard GFI Receptacles: Industrial specification grade, duplex, 20A, 125V, NEMA 5-20R, rectangular decorator style.

D. Surge Protection Receptacles:
   1. All Surge Protection Receptacles: Listed and labeled as complying with NEMA WD 1, NEMA WD 6, UL 498, and UL 1449.
      a. Energy Dissipation: Not less than 240 J per mode.
      b. Protected Modes: L-N, L-G, N-G.
      c. UL 1449 Voltage Protection Rating (VPR): Not more than 700 V for L-N, L-G modes and 1200 V for N-G mode.
      d. Diagnostics:
         1) Visual Notification: Provide indicator light to report functional status of surge protection.
   2. Standard Surge Protection Receptacles: Industrial specification grade, duplex, 20A, 125V, NEMA 5-20R, rectangular decorator style.

3. Isolated Ground Surge Protection Receptacles: Industrial specification grade, duplex, 20A, 125V, NEMA 5-20R, rectangular decorator style, with ground contacts isolated from mounting strap.

2.7 WALL PLATES

A. All Wall Plates: Comply with UL 514D.
   1. Configuration: One piece cover as required for quantity and types of corresponding wiring devices.
   2. Size: Standard; .
   3. Screws: Metal with slotted heads finished to match wall plate finish.
   4. Finished Spaces: Stainless steel wall plates, brushed satin finish, Type 302 stainless steel.
   5. Unfinished Spaces: Galvanized steel wall plates, rounded corners and edges, with corrosion resistant screws.
   6. Damp Locations: Gasketed, cast aluminum, with self-closing hinged cover and corrosion-resistant screws; listed as suitable for use in wet locations with cover closed.

B. Wet-Location, Weatherproof Cover Plates: NEMA 250, complying with type 3R weather-resistant, die-cast aluminum with lockable cover.

2.8 FLOOR BOX SERVICE FITTINGS

A. Description: Service fittings compatible with floor boxes provided under Section 26 0537 with all components, adapters, and trims required for complete installation.

PART 3 EXECUTION

3.1 INSTALLATION

A. Perform work in a neat and workmanlike manner in accordance with NECA 1 and, where applicable, NECA 130, including mounting heights specified in those standards unless otherwise indicated.

B. Coordinate locations of outlet boxes provided under Section 26 0537 as required for installation of wiring devices provided under this section.
   1. Mounting Heights: As indicated on the drawings.

C. Install wiring devices in accordance with manufacturer's instructions.

D. Install permanent barrier between ganged wiring devices when voltage between adjacent devices exceeds 300 V.

E. Connect wiring devices by wrapping conductor clockwise 3/4 turn around screw terminal and tightening to proper torque specified by the manufacturer. Where present, do not use push-in pressure terminals that do not rely on screw-actuated binding.

F. Unless otherwise indicated, connect wiring device grounding terminal to branch circuit equipment grounding conductor and to outlet box with bonding jumper.

G. For isolated ground receptacles, connect wiring device grounding terminal only to identified branch circuit isolated equipment grounding conductor. Do not connect grounding terminal to outlet box or normal branch circuit equipment grounding conductor.

H. Install wall dimmers to achieve full rating specified and indicated after derating for ganging as instructed by manufacturer.

I. Verify that dimmers used for fan speed control are listed for that application.

J. Do not share neutral conductor on branch circuits utilizing wall dimmers.

END OF SECTION

SECTION 26 2817 - ENCLOSED CIRCUIT BREAKERS

PART 1 GENERAL

1.1 SUBMITTALS

A. Product Data: Provide manufacturer's standard catalog pages and data sheets for circuit breakers, enclosures, and other installed components and accessories. Include dimensioned elevations, sections, weights, and manufacturers' technical data on features, performance, electrical characteristics, ratings, accessories, and finishes.
   1. Include characteristic trip curves for each type and rating of circuit breaker upon request.

B. Field Quality Control Test Reports.

1.2 QUALITY ASSURANCE

A. Conform to requirements of NFPA 70.

PART 2 PRODUCTS

2.01 MOLDED CASE CIRCUIT BREAKERS

PART 3 EXECUTION

3.1 INSTALLATION

A. Install enclosed circuit breakers where indicated, in accordance with manufacturer's instructions.

B. Install enclosed circuit breakers securely, in a neat and workmanlike manner in accordance with NECA 1.

C. Arrange equipment to provide minimum clearances in accordance with manufacturer's instructions and NFPA 70.

D. Provide required supports in accordance with Section 26 0529.

E. Except where indicated to be mounted adjacent to the equipment they supply, mount enclosed circuit breakers such that the highest position of the operating handle does not exceed 79 inches above the floor or working platform.

F. Provide grounding and bonding in accordance with Section 26 0526.

END OF SECTION

SECTION 26 2818 - ENCLOSED SWITCHES

PART 1 GENERAL

1.1 SUBMITTALS

A. Product Data: Provide manufacturer's standard catalog pages and data sheets for enclosed switches and other installed components and accessories. Include dimensioned elevations, sections, weights, and manufacturers' technical data on features, performance, electrical characteristics, ratings, accessories, and finishes.

B. Field Quality Control Test Reports.

1.2 QUALITY ASSURANCE

A. Conform to requirements of NFPA 70.

PART 2 PRODUCTS

2.1 ENCLOSED SAFETY SWITCHES

A. Description: Quick-make, quick-break enclosed safety switches listed and labeled as complying with UL 98; heavy duty; ratings, configurations, and features as indicated on the drawings.

B. Provide products listed, classified, and labeled as suitable for the purpose intended.

C. Horsepower Rating: Suitable for connected load.

D. Voltage Rating: Suitable for circuit voltage.

E. Short Circuit Current Rating:
   1. Provide enclosed safety switches, when protected by the fuses or supply side overcurrent protective devices to be installed, with listed short circuit current rating as indicated on the drawings.

F. Conductor Terminations: Suitable for use with the conductors to be installed.

G. Provide solidly bonded equipment ground bus in each enclosed safety switch, with a suitable lug for terminating each equipment grounding conductor.

H. Enclosures: Comply with NEMA 250, and list and label as complying with UL 50 and UL 50E.

I. Provide safety interlock to prevent opening the cover with the switch in the ON position with capability of overriding interlock for testing purposes.

J. Heavy Duty Switches:
   1. Comply with NEMA KS 1.
   2. Conductor Terminations:
      a. Lug Material: Aluminum, suitable for terminating aluminum or copper conductors.
   3. Provide externally operable handle with means for locking in the OFF position, capable of accepting three padlocks.

K. Provide the following features and accessories where indicated or where required to complete installation:

PART 3 EXECUTION

3.1 INSTALLATION

A. Install enclosed switches in accordance with manufacturer's instructions.

B. Install enclosed switches securely, in a neat and workmanlike manner in accordance with NECA 1.

C. Arrange equipment to provide minimum clearances in accordance with manufacturer's instructions and NFPA 70.

D. Provide required supports in accordance with Section 26 0529.

E. Except where indicated to be mounted adjacent to the equipment they supply, mount enclosed switches such that the highest position of the operating handle does not exceed 79 inches above the floor or working platform.

F. Provide grounding and bonding in accordance with Section 26 0526.

END OF SECTION

SECTION 26 3213 - ENGINE GENERATORS

PART 1 GENERAL

1.1 SUBMITTALS

A. Product Data: Provide manufacturer's standard catalog pages and data sheets for each product, including ratings, configurations, dimensions, finishes, weights, service condition requirements, and installed features. Include alternator starting capabilities, engine fuel consumption rates, and cooling, combustion air, and exhaust requirements.
   1. Include generator set sound level test data.
   2. Include characteristic trip curves for overcurrent protective devices upon request.
   3. Include alternator thermal damage curve upon request.

B. Derating Calculations: Indicate ratings adjusted for applicable service conditions.

C. Fuel Storage Tank Calculations: Indicate maximum running time for generator set configuration provided.

D. Evidence of qualifications for installer.

E. Manufacturer's factory emissions certification.

1.2 QUALITY ASSURANCE

A. Comply with the following:
   1. NFPA 70 (National Electrical Code).
   2. NFPA 37 (Standard for the Installation and Use of Stationary Combustion Engines and Gas Turbines).

B. Installer Qualifications: Company specializing in performing the work of this section with minimum three years documented experience with engine generator systems of similar size, type, and complexity; manufacturer's authorized installer.

1.3 WARRANTY

A. Provide minimum one year manufacturer warranty covering repair or replacement due to defective materials or workmanship.

PART 2 PRODUCTS

2.1 PACKAGED ENGINE GENERATOR SYSTEM

A. Provide new engine generator system consisting of all required equipment, sensors, conduit, boxes, wiring, piping, supports, accessories, system programming, etc. as necessary for a complete operating system that provides the functional intent indicated.

B. Provide products listed, classified, and labeled as suitable for the purpose intended.

C. System Description:
   1. Application: Emergency/standby.
   2. Configuration: Single packaged engine generator set operated independently (not in parallel).

D. Packaged Engine Generator Set:
   1. Type: Gaseous (spark ignition).

E. Generator Set General Requirements:
   1. Prototype tested in accordance with NFPA 110 for Level 1 systems.
   2. List and label engine generator assembly as complying with UL 2200.
   3. Power Factor: Unless otherwise indicated, specified power ratings are at 0.8 power factor for three phase voltages and 1.0 power factor for single phase voltages.

F. Service Conditions: Provide engine generator system and associated components suitable for operation under the service conditions at the installed location.

G. Starting and Load Acceptance Requirements:

1. Cranking Method: Cycle cranking complying with NFPA 110 (15 second crank period, followed by 15 second rest period, with cranking limiter time-out after 3 cycles), unless otherwise required.
2. Start Time: Capable of starting and achieving conditions necessary for load acceptance within 10 seconds (NFPA 110, Type 10).
3. Maximum Load Step: Supports 100 percent of rated load in one step.

H. Exhaust Emissions Requirements:
1. Comply with federal (EPA), state, and local regulations applicable at the time of commissioning; include factory emissions certification with submittals.
2. Do not make modifications affecting generator set factory emissions certification without approval of manufacturer and Engineer. Where such modifications are made, provide field emissions testing as necessary for certification.

I. Interface with building automation system as specified in Section .

2.2 ENGINE AND ENGINE ACCESSORY EQUIPMENT

A. Provide engine with adequate horsepower to achieve specified power output at rated speed, accounting for alternator efficiency and parasitic loads.

B. Engine Fuel System - Gaseous (Spark Ignition):
1. Fuel Source: Natural gas.
2. Engine Fuel Connections: Provide suitable, approved flexible fuel lines for coupling engine to fuel source.
3. Provide components/features indicated and as necessary for operation and/or required by applicable codes, including but not limited to:
   a. Carburetor.
   b. Gas pressure regulators.
   c. Fuel shutoff control valves.
   d. Low gas pressure switches.

C. Engine Starting System:
1. System Type: Electric, with DC solenoid-activated starting motor(s).
2. Battery(s):
   a. Battery Type: Lead-acid.
   b. Battery Capacity: Size according to manufacturer's recommendations for achieving starting and load acceptance requirements under worst case ambient temperature; capable of providing cranking through two complete periods of cranking limiter time-outs without recharging.
   c. Provide battery rack, cables, and connectors suitable for the supplied battery(s); size battery cables according to manufacturer's recommendations for cable length to be installed.
3. Battery-Charging Alternator: Engine-driven, with integral solid-state voltage regulation.

D. Engine Speed Control System (Governor):
1. Single Engine Generator Sets (Not Operated in Parallel): Provide electronic isochronous governor for controlling engine speed/alternator frequency.
2. Frequency Regulation, Electronic Isochronous Governors: No change in frequency from no load to full load; plus/minus 0.25 percent at steady state.

E. Engine Lubrication System:
1. System Type: Full pressure, with engine-driven, positive displacement lubrication oil pump, replaceable full-flow oil filter(s), and dip-stick for oil level indication. Provide oil cooler where recommended by manufacturer.

F. Engine Cooling System:
1. System Type: Closed-loop, liquid-cooled, with unit-mounted radiator/fan and engine-driven coolant pump; suitable for providing adequate cooling while operating at full load under worst case ambient temperature.

2. Fan Guard: Provide suitable guard to protect personnel from accidental contact with fan.

G. Engine Air Intake and Exhaust System:
1. Air Intake Filtration: Provide engine-mounted, replaceable, dry element filter.
2. Engine Exhaust Connection: Provide suitable, approved flexible connector for coupling engine to exhaust system.

2.3 ALTERNATOR (GENERATOR)

A. Alternator: 4-pole, 1800 rpm (60 Hz output) revolving field, synchronous generator complying with NEMA MG 1; connected to engine with flexible coupling; voltage output configuration as indicated, with reconnectable leads for 3 phase alternators.

B. Exciter:
1. Exciter Type: Brushless; provide permanent magnet generator (PMG) excitation system; self-excited (shunt) systems are not permitted.
2. PMG Excitation Short-Circuit Current Support: Capable of sustaining 300 percent of rated output current for 10 seconds.
3. Voltage Regulation (with PMG excitation): Plus/minus 0.5 percent for any constant load from no load to full load.

C. Temperature Rise: Comply with UL 2200.

D. Insulation System: NEMA MG 1, Class H; suitable for alternator temperature rise.

E. Enclosure: NEMA MG 1, drip-proof.

F. Total Harmonic Distortion: Not greater than five percent.

2.4 GENERATOR SET CONTROL SYSTEM

A. Provide microprocessor-based control system for automatic control, monitoring, and protection of generator set. Include sensors, wiring, and connections necessary for functions/indications specified.

B. Control Panel:
1. Control Panel Mounting: Unit-mounted unless otherwise indicated; vibration isolated.
2. Generator Set Control Functions:
   a. Automatic Mode: Initiates generator set start/shutdown upon receiving corresponding signal from remote device (e.g. automatic transfer switch).
   b. Manual Mode: Initiates generator set start/shutdown upon direction from operator.
   c. Reset Mode: Clears all faults, allowing generator set restart after a shutdown.
   d. Emergency Stop: Immediately shuts down generator set (without time delay) and prevents automatic restarting until manually reset.
   e. Cycle Cranking: Programmable crank time, rest time, and number of cycles.
   f. Time Delay: Programmable for shutdown (engine cooldown) and start (engine warmup).
   g. Voltage Adjustment: Adjustable through range of plus/minus 5 percent.
3. Generator Set Status Indications:
   a. Voltage (Volts AC): Line-to-line, line-to-neutral for each phase.
   b. Current (Amps): For each phase.
   c. Frequency (Hz).
   d. Real power (W/kW).
   e. Reactive power (VAR/kVAR).
   f. Apparent power (VA/kVA).
   g. Power factor.
   h. Duty Level: Actual load as percentage of rated power.
   i. Engine speed (RPM).
   j. Battery voltage (Volts DC).
   k. Engine oil pressure.
   l. Engine coolant temperature.

m. Engine run time.
n. Generator powering load (position signal from transfer switch).

4. Generator Set Protection and Warning/Shutdown Indications:
   a. Comply with NFPA 110; configurable for NFPA 110 Level 1 or Level 2, or NFPA 99 systems including but not limited to the following protections/indications:
      1) Overcrank (shutdown).
      2) Low coolant temperature (warning).
      3) High coolant temperature (warning).
      4) High coolant temperature (shutdown).
      5) Low oil pressure (shutdown).
      6) Overspeed (shutdown).
      7) Low fuel level (warning).
      8) Low coolant level (warning/shutdown).
      9) Generator control not in automatic mode (warning).
      10) High battery voltage (warning).
      11) Low cranking voltage (warning).
      12) Low battery voltage (warning).
      13) Battery charger failure (warning).
   b. In addition to NFPA 110 requirements, provide the following protections/indications:
      1) High AC voltage (shutdown).
      2) Low AC voltage (shutdown).
      3) High frequency (shutdown).
      4) Low frequency (shutdown).
      5) Overcurrent (shutdown).
   c. Provide contacts for local and remote common alarm.
   d. Provide lamp test function that illuminates all indicator lamps.
5. Other Control Panel Features:
   a. Event log.

C. Remote Annunciator:
1. Remote Annunciator Mounting: Wall-mounted; Provide flush-mounted annunciator for finished areas and surface-mounted annunciator for non-finished areas unless otherwise indicated.
2. Generator Set Status Indications:
   a. Generator powering load (via position signal from transfer switch).
   b. Communication functional.
3. Generator Set Warning/Shutdown Indications:
   a. Comply with NFPA 110 for Level 1 systems including but not limited to the following indications:
      1) Overcrank (shutdown).
      2) Low coolant temperature (warning).
      3) High coolant temperature (warning).
      4) High coolant temperature (shutdown).
      5) Low oil pressure (shutdown).
      6) Overspeed (shutdown).
      7) Low coolant level (warning/shutdown).
      8) Generator control not in automatic mode (warning).
      9) High battery voltage (warning).
      10) Low cranking voltage (warning).
      11) Low battery voltage (warning).
      12) Battery charger failure (warning).
   b. Provide audible alarm with silence function.
   c. Provide lamp test function that illuminates all indicator lamps.

D. Remote Emergency Stop: Provide approved red, mushroom style remote emergency stop button where indicated or required by authorities having jurisdiction.

2.5 GENERATOR SET ENCLOSURE

A. Enclosure Type: Sound attenuating, weather protective.

B. Enclosure Material: Steel or aluminum.

C. Hardware Material: Stainless steel.

D. Color: Manufacturer's standard.

E. Sound Attenuating Enclosures: Line enclosure with non-hydroscopic, self-extinguishing sound-attenuating material.

F. Exhaust Silencers: Where exhaust silencers are mounted within enclosure in main engine compartment, insulate silencer to minimize heat dissipation as necessary for operation at rated load under worst case ambient temperature.

2.6 SOURCE QUALITY CONTROL

A. Perform production tests on generator sets at factory to verify operation and performance characteristics prior to shipment. Include certified test report with submittals.

PART 3 EXECUTION

3.1 INSTALLATION

A. Perform work in a neat and workmanlike manner in accordance with NECA 1.

B. Install products in accordance with manufacturer's instructions.

C. Install generator sets and associated accessories in accordance with NECA/EGSA 404.

D. Arrange equipment to provide minimum clearances and required maintenance access.

E. Unless otherwise indicated, mount generator set on properly sized 6 inch high concrete pad constructed in accordance with Section 03 3000. Provide suitable vibration isolators, where not factory installed.

F. Use manufacturer's recommended oil and coolant, suitable for the worst case ambient temperatures.

G. Install exhaust silencer in accordance with Section 23 5100, where not factory installed.

3.2 FIELD QUALITY CONTROL

A. Provide all equipment, tools, and supplies required to accomplish inspection and testing, including load bank and fuel.

B. Prepare and start system in accordance with manufacturer's instructions.

C. Provide field emissions testing where necessary for certification.

D. Sound Level Tests: Measure sound levels for compliance with specified requirements. Identify and report ambient noise conditions.

E. Correct defective work, adjust for proper operation, and retest until entire system complies with contract documents.

3.3 CLOSEOUT ACTIVITIES

A. Demonstration: Demonstrate proper operation of system to Owner, and correct deficiencies or make adjustments as directed.

B. Training: Train Owner's personnel on operation, adjustment, and maintenance of system.

END OF SECTION

SECTION 26 3600 - TRANSFER SWITCHES

PART 1 GENERAL

1.1 SUBMITTALS

A. Product Data: Provide manufacturer's standard catalog pages and data sheets for each product, including ratings, configurations, dimensions, finishes, weights, service condition requirements, and installed features.
   1. Where applicable, include characteristic trip curves for overcurrent protective devices upon request.

B. Evidence of qualifications for installer.

1.2 QUALITY ASSURANCE

A. Comply with the following:
   1. NFPA 70 (National Electrical Code).
   2. NFPA 110 (Standard for Emergency and Standby Power Systems); meet requirements for system Level specified in Section 26 3213.

B. Installer Qualifications: Company specializing in performing the work of this section with minimum three years documented experience with power transfer systems of similar size, type, and complexity; manufacturer's authorized installer.

1.3 WARRANTY

A. Provide minimum one year manufacturer warranty covering repair or replacement due to defective materials or workmanship.

PART 2 PRODUCTS

2.1 TRANSFER SWITCHES

A. Provide complete power transfer system consisting of all required equipment, conduit, boxes, wiring, supports, accessories, system programming, etc. as necessary for a complete operating system that provides the functional intent indicated.

B. Provide products listed, classified, and labeled as suitable for the purpose intended.

C. Applications:
   1. For transfer of highly inductive loads (e.g. large motors and transformers), utilize open transition transfer with in-phase monitor, delayed transition transfer, or disconnection (prior to transfer) and timed reconnection (after transfer) of designated motors.
   2. Neutral Switching (Single Phase, Three Wire and Three Phase, Four Wire Systems):
      a. Unless otherwise indicated or required, provide neutral switching:
         1) Where the alternate/emergency source is a separately derived system.
   3. Provide signal before transfer contacts for transfer switches serving elevators.

D. Construction Type: Either "contactor type" (open contact) or "breaker type" (enclosed contact) transfer switches complying with specified requirements are acceptable.

E. Automatic Transfer Switch:

F. Comply with NEMA ICS 10 Part 1, and list and label as complying with UL 1008 for the classification of the intended application (e.g. emergency, optional standby).

G. Do not use double throw safety switches or other equipment not specifically designed for power transfer applications and listed as transfer switch equipment.

H. Load Classification: Classified for total system load (any combination of motor, electric discharge lamp, resistive, and tungsten lamp loads with tungsten lamp loads not exceeding 30 percent of the continuous current rating) unless otherwise indicated or required.

I. Switching Methods:
   1. Open Transition:

a. Provide break-before-make transfer without a neutral position that is not connected to either source, and with interlocks to prevent simultaneous connection of the load to both sources.
b. Where in-phase transfer is indicated, utilize in-phase monitor to initiate transfer when phase angle difference between sources is near zero to limit in-rush currents.

2. Delayed Transition:
   a. Provide break-before-make transfer with programmable time delay in a neutral position not connected to either source, and with interlocks to prevent simultaneous connection of the load to both sources.
3. Neutral Switching: Either simultaneously switched neutral (break-before-make) or overlapping neutral (make-before-break) methods are acceptable.
4. Obtain control power for transfer operation from line side of source to which the load is to be transferred.

J. Service Conditions: Provide transfer switches suitable for continuous operation at indicated ratings under the service conditions at the installed location.

K. Enclosures:
   1. Environment Type per NEMA 250: Unless otherwise indicated, as specified for the following installation locations:

L. Short Circuit Current Rating:
   1. Withstand and Closing Rating: Provide transfer switches, when protected by the supply side overcurrent protective devices to be installed, with listed withstand and closing rating not less than the available fault current at the installed location as indicated on the drawings.
   2. Short Time Rating: Where the requirement for selectivity is indicated, provide transfer switches with short time ratings suitable for the maximum short time delay setting of the supply side overcurrent protective device.

M. Automatic Transfer Switches:
   1. Control Functions:
      a. Automatic mode.
      b. Test Mode: Simulates failure of primary/normal source.
      c. Voltage and Frequency Sensing:
         1) Undervoltage sensing for each phase of primary/normal source; adjustable dropout/pickup settings.
         2) Undervoltage sensing for alternate/emergency source; adjustable dropout/pickup settings.
         3) Underfrequency sensing for alternate/emergency source; adjustable dropout/pickup settings.
      d. Outputs:
         1) Contacts for engine start/shutdown (except where direct generator communication interface is provided).
         2) Auxiliary contacts; one set(s) for each switch position.
      e. Adjustable Time Delays:
         1) Engine generator start time delay; delays engine start signal to override momentary primary/normal source failures.
         2) Transfer to alternate/emergency source time delay.
         3) Retransfer to primary/normal source time delay.
         4) Engine generator cooldown time delay; delays engine shutdown following retransfer to primary/normal source to permit generator to run unloaded for cooldown period.
      f. In-Phase Monitor (Open Transition Transfer Switches): Monitors phase angle difference between sources for initiating in-phase transfer.

g. Engine Exerciser: Provides programmable scheduled exercising of engine generator selectable with or without transfer to load; provides memory retention during power outage.

2. Status Indications:
   a. Connected to alternate/emergency source.
   b. Connected to primary/normal source.
   c. Alternate/emergency source available.
3. Automatic Sequence of Operations:
   a. Upon failure of primary/normal source for a programmable time period (engine generator start time delay), initiate starting of engine generator where applicable.
   b. When alternate/emergency source is available, transfer load to alternate/emergency source after programmable time delay.
   c. When primary/normal source has been restored, retransfer to primary/normal source after a programmable time delay. Bypass time delay if alternate/emergency source fails and primary/normal source is available.
   d. Where applicable, initiate shutdown of engine generator after programmable engine cooldown time delay.

N. Interface with Other Work:
   1. Interface with engine generators as specified in Section 26 3213.
   2. Interface with elevators as specified in Section 14 2010.
   3. Interface with building automation system as specified in Section 230900.

2.2 SOURCE QUALITY CONTROL

A. Perform production tests on transfer switches at factory to verify operation and performance characteristics prior to shipment. Include certified test report with submittals.

PART 3 EXECUTION

3.1 INSTALLATION

A. Perform work in a neat and workmanlike manner in accordance with NECA 1.

B. Install transfer switches in accordance with manufacturer's instructions.

C. Arrange equipment to provide minimum clearances and required maintenance access.

D. Unless otherwise indicated, mount floor-mounted transfer switches on properly sized 3 inch high concrete pad constructed in accordance with Section 03 3000.

3.2 FIELD QUALITY CONTROL

A. Provide services of a manufacturer's authorized representative to observe installation and assist in inspection and testing. Include manufacturer's detailed testing procedures and field reports with submittals.

B. Prepare and start system in accordance with manufacturer's instructions.

C. Automatic Transfer Switches:
   1. Inspect and test in accordance with NETA ATS, except Section 4.
   2. Perform inspections and tests listed in NETA ATS, Section 7.22.3. The control wiring insulation-resistance tests listed as optional are not required.

D. Provide additional inspection and testing as required for completion of associated engine generator testing as specified in Section 26 3213.

E. Correct defective work, adjust for proper operation, and retest until entire system complies with contract documents.

3.3 CLOSEOUT ACTIVITIES

A. Demonstration: Demonstrate proper operation of transfer switches to Owner, and correct deficiencies or make adjustments as directed.

B. Training: Train Owner's personnel on operation, adjustment, and maintenance of transfer switches.

END OF SECTION

SECTION 26 4113 - LIGHTNING PROTECTION FOR STRUCTURES

PART 1 GENERAL

1.1 SUBMITTALS

A. Shop Drawings: Indicate location and layout of air terminals, grounding electrodes, and bonding connections to structure and other metal objects. Include terminal, electrode, and conductor sizes, and connection and termination details.

B. Product Data: Provide dimensions and materials of each component, indication of testing agency listing, and installation instructions.

PART 2 PRODUCTS

2.1 LIGHTNING PROTECTION SYSTEM

A. Lightning Protection System: Provide complete system complying with NFPA 780, including air terminals, bonding, interconnecting conductors and grounding electrodes.

1. Provide system that protects:
   a. The entire structure.
   b. Open air areas within 100 feet of exterior walls at grade level.
   c. Open air areas within building footprint.

2.2 COMPONENTS

A. All Components: Complying with applicable requirements of UL 96.

B. Strike (Air) Terminals: Copper, solid, with adhesive bases for single-ply roof installations.

C. Grounding Rods: Solid copper.

D. Ground Plate: Copper.

E. Conductors: Copper cable.

F. Connectors and Splicers: Bronze.

PART 3 EXECUTION

3.01 INSTALLATION

END OF SECTION

SECTION 26 4300 - SURGE PROTECTIVE DEVICES

PART 1 GENERAL

1.1 SUBMITTALS

A. Product Data: Include detailed component information, voltage, surge current ratings, repetitive surge current capacity, voltage protection rating (VPR) for all protection modes, maximum continuous operating voltage (MCOV), nominal discharge current (I-n), short circuit current rating (SCCR), connection means including any required external overcurrent protection, enclosure ratings, outline and support point dimensions, weight, service condition requirements, and installed features.
   1. SPDs with EMI/RFI filter: Include noise attenuation performance.

PART 2 PRODUCTS

2.1 SURGE PROTECTIVE DEVICES - GENERAL REQUIREMENTS

A. Description: Factory-assembled surge protective devices (SPDs) for 60 Hz service; listed, classified, and labeled as suitable for the purpose intended; system voltage as indicated on the drawings.

B. Protected Modes:
   1. Wye Systems: L-N, L-G, N-G, L-L.

C. UL 1449 Voltage Protection Ratings (VPRs):
   1. 480Y/277V System Voltage: Not more than 1,500 V for L-N, L-G, and N-G modes and 2,000 V for L-L mode.

D. UL 1449 Maximum Continuous Operating Voltage (MCOV): Not less than 115% of nominal system voltage.

E. Enclosure Environment Type per NEMA 250: Unless otherwise indicated, as specified for the following installation locations:
   1. Indoor clean, dry locations: Type 1.

F. Equipment Containing Factory-installed, Internally Mounted SPDs: Listed and labeled as a complete assembly including SPD.

2.2 SURGE PROTECTIVE DEVICES FOR SERVICE ENTRANCE LOCATIONS

A. Unless otherwise indicated, provide field-installed, externally mounted or factory-installed, internally mounted SPDs.

B. List and label as complying with UL 1449, Type 1 when connected on line side of service disconnect overcurrent device and Type 1 or 2 when connected on load side of service disconnect overcurrent device.

C. Provide SPDs utilizing field-replaceable modular or non-modular protection circuits.

D. Surge Current Rating: Not less than 120 kA per mode/240 kA per phase.

E. UL 1449 Nominal Discharge Current (I-n): 20 kA.

F. UL 1449 Short Circuit Current Rating (SCCR): Not less than the available fault current at the installed location as indicated on the drawings.

G. Diagnostics:
   1. Protection Status Monitoring: Provide indicator lights to report the protection for each phase.
   2. Alarm Notification: Provide indicator light and audible alarm to report alarm condition. Provide button to manually silence audible alarm.

2.3 SURGE PROTECTIVE DEVICES FOR DISTRIBUTION LOCATIONS

A. Unless otherwise indicated, provide field-installed, externally mounted or factory-installed, internally mounted SPDs.

B. List and label as complying with UL 1449, Type 1 or Type 2.

C. Provide SPDs utilizing field-replaceable modular or non-modular protection circuits.

D. Surge Current Rating: Not less than 80 kA per mode/160 kA per phase.

E. UL 1449 Nominal Discharge Current (I-n): 20 kA.

F. UL 1449 Short Circuit Current Rating (SCCR): Not less than the available fault current at the installed location as indicated on the drawings.

G. Diagnostics:
   1. Protection Status Monitoring: Provide indicator lights to report the protection status for each phase.
   2. Alarm Notification: Provide indicator light and audible alarm to report alarm condition. Provide button to manually silence audible alarm.

2.4 SURGE PROTECTIVE DEVICES FOR BRANCH PANELBOARD LOCATIONS

A. Unless otherwise indicated, provide field-installed, externally mounted or factory-installed, internally mounted SPDs.

B. List and label as complying with UL 1449, Type 1 or Type 2.

C. Provide SPDs utilizing field-replaceable modular or non-modular protection circuits.

D. Surge Current Rating: Not less than 60 kA per mode/120 kA per phase.

E. UL 1449 Nominal Discharge Current (I-n): 20 kA.

F. UL 1449 Short Circuit Current Rating (SCCR): Not less than the available fault current at the installed location as indicated on the drawings.

G. Diagnostics:
   1. Protection Status Monitoring: Provide indicator lights to report the protection status.
   2. Alarm Notification: Provide indicator light and audible alarm to report alarm condition. Provide button to manually silence audible alarm.

PART 3 EXECUTION

3.1 INSTALLATION

A. Perform work in a neat and workmanlike manner in accordance with NECA 1.

B. Install SPD in accordance with manufacturer's instructions.

C. Arrange equipment to provide minimum clearances in accordance with manufacturer's instructions and NFPA 70.

D. Provide conductors with minimum ampacity as indicated on the drawings, as required by NFPA 70, and not less than manufacturer's recommended minimum conductor size.

E. Install conductors between SPD and equipment terminations as short and straight as possible, not exceeding manufacturer's recommended maximum conductor length. Breaker locations may be reasonably rearranged in order to provide leads as short and straight as possible. Twist conductors together to reduce inductance.

END OF SECTION

SECTION 26 5100 - INTERIOR LIGHTING

PART 1 GENERAL

1.1 SUBMITTALS

A. Product Data: Provide manufacturer's standard catalog pages and data sheets including detailed information on luminaire construction, dimensions, ratings, finishes, mounting requirements, listings, service conditions, photometric performance, installed accessories, and ceiling compatibility; include model number nomenclature clearly marked with all proposed features.

1. LED Luminaires:

a. Include estimated useful life, calculated based on IES LM-80 test data.

1.2 QUALITY ASSURANCE

A. Conform to requirements of NFPA 70.

PART 2 PRODUCTS

2.1 LUMINAIRES

A. Provide products that comply with requirements of NFPA 70.

B. Provide products that are listed and labeled as complying with UL 1598, where applicable.

C. Provide products listed, classified, and labeled as suitable for the purpose intended.

D. Unless otherwise indicated, provide complete luminaires including lamp(s) and all sockets, ballasts, reflectors, lenses, housings and other components required to position, energize and protect the lamp and distribute the light.

E. Unless specifically indicated to be excluded, provide all required conduit, boxes, wiring, connectors, hardware, supports, trims, accessories, etc. as necessary for a complete operating system.

F. Provide products suitable to withstand normal handling, installation, and service without any damage, distortion, corrosion, fading, discoloring, etc.

END OF SECTION

SECTION 26 5600 - EXTERIOR LIGHTING

PART 1 GENERAL

1.1 SUBMITTALS

A. Product Data: Provide manufacturer's standard catalog pages and data sheets including detailed information on luminaire construction, dimensions, ratings, finishes, mounting requirements, listings, service conditions, photometric performance, weight, effective projected area (EPA), and installed accessories; include model number nomenclature clearly marked with all proposed features.

1. LED Luminaires:
   a. Include estimated useful life, calculated based on IES LM-80 test data.
   b. Include IES LM-79 test report upon request.

1.2 QUALITY ASSURANCE

A. Conform to requirements of NFPA 70.

PART 2 PRODUCTS

2.1 LUMINAIRES

A. Provide products that comply with requirements of NFPA 70.

B. Provide products that are listed and labeled as complying with UL 1598, where applicable.

C. Provide products listed, classified, and labeled as suitable for the purpose intended.

D. Unless otherwise indicated, provide complete luminaires including lamp(s) and all sockets, ballasts, reflectors, lenses, housings and other components required to position, energize and protect the lamp and distribute the light.

E. Unless specifically indicated to be excluded, provide all required conduit, boxes, wiring, connectors, hardware, poles, foundations, supports, trims, accessories, etc. as necessary for a complete operating system.

F. Provide products suitable to withstand normal handling, installation, and service without any damage, distortion, corrosion, fading, discoloring, etc.

END OF SECTION

SECTION 270526
TELECOMMUNICATIONS GROUNDING & BONDING

PART 1 GENERAL

1.1 PROJECT SCOPE SUMMARY

This sections includes telecommunications grounding and bonding specifications for the IAH Project Management Office at IAH in Houston, TX.

1.2 SECTION INCLUDES

A. Grounding electrodes and conductors.

B. Equipment grounding conductors.

C. Bonding.

D. Communication system grounding.

E. Electrical equipment and raceway grounding and bonding.

F. Control equipment grounding.

1.3 REFERENCES

A. Related Specification Sections
1. Section 270553 Identification and Labeling of Communication Infrastructure
2. Section 271100 Communication Cabinets and Equipment Rooms
3. Section 271300 Backbone and Riser Media Infrastructure
4. Section 271500 Horizontal Media Infrastructure
5. Section 272100 Data Communication Network Equipment
6. Section 272200 PC, Laptop, and Server Equipment
7. Section 270528 Internal Communication Pathways
8. Section 270543 External Communication Pathways

B. American Society for Testing and Materials (ASTM):
1. B 3 Soft or Annealed Copper Wires
2. B 8 Concentric-Lay-Stranded Copper Conductors, Hard, Medium Hard, Soft
3. B 33 Tinned Soft or Annealed Copper Wire for Electrical Purposes

C. Institute of Electrical and Electronics Engineers (IEEE):
1. 142-82 Recommended Practice for Grounding of Industrial and Commercial Power Systems
2. 383-2.5 IEEE Standard for Type Test of Class IE Electric Cables, Field Splices, and Connections for Nuclear Power Generating Stations.
3. 1100 IEEE Recommended Practice for Powering and Grounding Sensitive Electronic Equipment in Industrial and Commercial Power Systems.

D. Underwriters' Laboratories (UL):

1. 83 Thermoplastic Insulated Wire and Cables
2. 96 Lightning Protection Components
3. 96A System Installation
4. 467 Grounding and Bonding Equipment

E. National Fire Protection Association (NFPA):
1. 780 Lightning Protection Code
2. 70 National Electrical Code (NEC)
   a. NEC Article No. 250 - Grounding

F. American National Standards Institute/Telecommunications Industry Association/Electronic Industries Alliance (ANSI/TIA/EIA):
1. J-STD-607-A Commercial Building Grounding and Bonding Requirements.
2. Telcordia – Network Equipment Building Systems (NEBS) GR-1275.

G. Building Industry Consulting Services International (BICSI):
1. Telecommunications Distribution Methods Manual (Latest Issue)
2. Customer Owned Outside Plant Design Manual (Latest Issue)
3. NECA/BICSI 607-2011, Standard for Telecommunications Bonding and Grounding Planning and Installation Methods for Commercial Buildings

H. Local, county, state and federal regulations and codes in effect as of date of "notice to proceed" shall be complied with.

I. Equipment of foreign manufacture must meet U.S. codes and standards. It shall be indicated in the proposal the components which may be of foreign manufacture, if any, and the country of origin.

J. Reference attached Figure 1 for general grounding infrastructure layout and connectivity.

K. Conflicts:
1. Between referenced requirements: Comply with the one establishing the more stringent requirements.
2. Between reference requirements and contract documents: Comply with the one establishing the more stringent requirements.

1.4 DESIGN REQUIREMENTS

A. Design grounding system following ANSI J-STD 607-A – Commercial Building Grounding (Earthing) and Bonding Requirements for Telecommunications, BICSI Telecommunications Distribution Methods Manual, NECA/BICSI 607-2011, NEC Article No. 250 - Grounding, IEEE 1100 – Recommended Practices for Powering and Grounding Sensitive Electronic Equipment, and IEEE 142-82 - Recommended Practice for Grounding of Industrial and Commercial Power Systems, by a firm acceptable to Owner's insurance underwriter. All labeling shall follow standards set forth by ANSI/TIA/EIA-606 and Houston Airport System's Information Technology (HAS-IT) requirements.

B. Design Standards:
1. Completely protect above-surface structures and equipment.
2. Calculate system on the basis of existing soil resistivity.
3. If cathodic protection for underground sewer pipe is installed (see applicable

Division 2 Sections), ensure the pipe is not connected to the general grounding system, either directly through grounding cable or indirectly through grounded electrical devices connected to the pipe. Electrically isolate electrical devices from sewer pipe.

C. Radio Equipment
   1. All Radio equipment/systems shall be grounded per Motorola Standard R56.

1.5 SUBMITTALS

A. Follow Section 01340 for the following:

B. Product Data:
   1. Manufacturers catalog data and applicable special fabrication and installation details.
   2. Installation, terminating and splicing procedures.
   3. Instructions for handling and storage.
   4. Dimensions and weights.
   5. Conformance Certificate and Quality Assurance Release: Signed by QAP Manager (Section 01450). Specifically identify products and include purchase order number, supplements, and item number where applicable. Indicate that requirements are met and identify approved deviations.

1.6 QUALITY ASSURANCE

A. Furnish products of latest proven design, new and in current production. Do not use obsolete components or out-of-production products.

B. Tests for Insulated Cable: Pass vertical tray flame test following IEEE 383-2.5.

C. HAS retains the right to inspect all work during the entire duration of the project and any items that do not adhere to the reference, contract, bid, or project documents will be corrected immediately at the expense of the contractor.

1.7 SHIPPING AND HANDLING

A. Ship on manufacturer's standard reel sizes of one continuous length. Where cut lengths are specified, mark reel quantity accordingly.

B. Protect wire wood lagging or suitable barrier across the traverse of reels. Provide heat-shrink self-sealing end caps on cable.

C. Equipment shall be delivered in original packages with labels intact and identification clearly marked. Equipment and components shall be protected from the weather, humidity, temperature variations, dirt, dust, or other containments. Equipment damaged prior to system acceptance shall be replaced at no cost to the HAS.

PART 2 PRODUCTS

2.1 MANUFACTURERS

A. Cable Manufacturers/Suppliers:
1. Houston Wire and Cable Company
2. Okonite Company
3. Anixter
4. Graybar
5. CSC (Communication Supply Company)
6. Cablec Continental Cables Company
7. Pirelli Cable Corporation
8. Triangle Wire and Cable, Inc.

B. Ground Rod and Connector Manufacturers:
1. Copperweld
2. Thomas & Betts
3. Blackburn

C. Exothermic Connector Manufacturers:
1. Erico Products (Cadweld)
2. Burndy Corporation (Therm-O-Weld)
3. OZ Gedney

D. Grounding Connector Manufacturers:
1. Thomas & Betts
2. Burndy Corporation
3. O.Z. Gedney
4. Panduit

E. Telecommunications Busbars:
1. Erico Products
2. Cooper B-Line
3. CPI Chatsworth
4. Panduit

2.2 MATERIALS

A. Grounding Conductors: Bare or insulated copper AWG wire following ASTM-B3, ASTM-B8 and ASTM-B33, of following sizes:
1. A minimum of 6 AWG, stranded, insulated (green) copper conductor should be used for communications since this accommodates different code requirements and allows for future changes.
3. Metallic cable shield shall NOT be used as a Telecommunication Bonding Backbone (TBB).
4. Interior water piping system shall NOT be used as a TBB

B. Grounding Connectors: It is recommended that connectors should be one of the following:
1. Tin-plated copper.

2. Copper.
3. Copper alloy.

C. Ground Rods: A minimum of 10 feet long, 3/4-inch diameter, copper-clad steel.

D. Where single conductor insulated grounding conductors is required, furnish green color (or tape marking) insulation rated for 600 volts.

E. Telecommunications Main Grounding Busbar (TMGB):
1. The TMGB shall be a predrilled copper busbar with standard NEMA bolt hole sizing and spacing for the type of connectors to be used. (Both holes in two holed lugs must be attached to busbar)
2. The TMGB shall be sized for the immediate requirements and allow for 100% growth.
3. The minimum busbar dimensions are .25” thick x 4” wide x 20” long.
4. The busbar shall be electrotin plated for reduced contact resistance.

F. Telecommunications Grounding Busbar (TGB):
1. The TGB shall be a predrilled copper busbar with standard NEMA bolt hole sizing and spacing for the type of connectors to be used. (Both holes in two holed lugs must be attached to busbar)
2. The TGB shall be sized for the immediate requirements and allow for 100% growth.
3. The minimum busbar dimensions are .25” thick x 2” wide x 12” long.
4. The busbar shall be electrotin plated for reduced contact resistance.

G. Rack-Mounted Grounding Busbar (RMGB):
1. The RMGB shall be a predrilled copper busbar with standard NEMA bolt hole sizing and spacing for the type of connectors to be used. (Both holes in two holed lugs must be attached to busbar)
2. The TGB shall be sized for the immediate requirements and allow for 100% growth.
3. The minimum busbar dimensions are 1/16” thick x 19” wide x 3/4” long.
4. The busbar shall be electrotin plated for reduced contact resistance.

PART 3 EXECUTION

3.1 PREPARATION

A. Complete site preparation and soil compaction before trenching and driving ground rods for underground use.

B. Verify exact location of stub-up points for grounding of equipment, fences and building or steel structures.

C. Verify wiring for lighting systems is single conductor cable in conduit and each conduit contains a green-color insulated equipment-grounding conductor connected to lighting system. If no ground conductor is present, install conductors as required.

D. Copper and copper alloy connections should be cleaned prior to connection.

E. In new construction, the electrical contractor must provide accessible means to a direct electrical service ground, which is one of the best points for grounding communications systems. NEC Section 250.94 and 800.100 requires an intersystem bonding connection accessible at the electrical service equipment, such as:

1. Approved external connection on the power service panel. The NEC allows direct connection to a provided minimum 6 AWG copper conductor. See Chart 1
2. Exposed metallic service raceway (using an approved bonding connector).
3. Grounding electrode conductor.
4. For connectivity between buildings and rooms, all bonding conductors are to be placed in conduit end to end and conduit should be properly grounded. 3/0 conductor to be placed in 2 inch conduit and minimum 6 AWG to be placed in a 1 inch conduit run.

TBB Conductor Size vs. Length	
TBB/GE Linear Length	TBB/GE Size
Feet (m)	(AWG)
Less than 13' (4) 6	6
14–20' (4 -6)	4
21–26' (6–8)	3
27–33' (8–10)	2
34–41' (10–13)	1
42–52' (13–16)	1/0
53–66' (16–20)	2/0
37–84' (20–26)	3/0
85–105' (26–32)	4/0
*Reference ANSI-J-STD-607-B for more information.	

Chart 1

3.2 INSTALLATION

A. Install work following drawings, manufacturer's instructions and approved submittal data.

B. Bonding conductors shall be routed with minimum bends or changes in direction and should be made directly to the points being bonded, and shall be one continuous run NO splices.

C. Bonding connections should be made by using:

1. Double crimp connectors only for all horizontal runs (cabinets trays etc.). Use listed hardware that has been laboratory tested. For double crimp connectors use 2 hole type connector.
2. Exothermic welding (per NEC) within the ground electrode system, for parts

of a grounding system that are subject to corrosion or that must carry high currents reliably, or for locations that require minimum maintenance.

3. Exothermic-weld to be used on the Telecommunications Bonding Backbone (TBB) conductor for all connections.

D. Install main ground loop minimum 18” (inches) below ground surface.

E. Drive grounding rods vertically, so at least 8 feet of rod is in contact with the soil. All connections shall be exothermic-weld. Install additional ground rods as required to pass resistance test.

F. Make connections only to dry surfaces with paint, rust, oxidation, scales, grease, dirt or other foreign material is removed. Ensure proper conductivity.

G. Make above-grade grounding connections with Exothermic-weld.
   1. Ground small groups of isolated equipment with No. 3/0 minimum insulated conductor connected to the main loop.

H. Equipment Grounding:
   1. Make grounding connections to electrical equipment, vessels, mechanical equipment, equipment enclosure, relay racks, and ground rods in accordance with NEC.
   2. Make grounding connections to tanks and vessels to integral structural supports or to existing grounding lugs or pads, and not to the body of the tank or vessel.

I. Telecommunications Raceway and Support Systems Grounding:
   1. Bond and ground raceway, cable rack or tray and conduit together and permanently ground to the equipment grounding busbar. Connection to conduit may be with grounding bushing.
   2. Connect ladder-type cable tray to grounding electrode system. Telecommunications cable tray that is located in the same room, as the TGB shall be connected to the TMGB.
   3. Bond and ground raceway at low voltage motor control centers or other low voltage control equipment, except conduit which is effectively grounded to sheet metal enclosure by bonding bushing or hubs need not be otherwise bonded.
   4. Where only grounding conductor is installed in a metal conduit, bond both ends of conduit to grounding conductors.
   5. Provide flexible "jumpers" around raceway expansion joints and across cable tray joints parted to allow for expansion and hinged cable tray connections. Provide copper bonding straps for steel conduit.

J. Telecommunications Grounding and Bonding Infrastructure:
   1. Install the TMGB in the Telecommunications Entrance Facility (TEF) or Main Distribution Frame (MDF) as close to the panel-board as possible. The TMGB should also be located so that the bonding conductor is as short and straight as possible. Maintain clearances required by applicable electrical codes.
   2. If a panel-board is not installed in the TEF or MDF, locate the TMGB near the backbone cabling and terminations.
   3. The TMGB shall be insulated from its support with a recommended

separation of 2 inches.

4. Connect the TMGB to the electrical service ground and telecommunications primary protectors.
5. The minimum Telecommunications Bonding Backbone (TBB) conductor size shall be No. 2 AWG. The TBB originates at the TMGB and extends throughout the building using the telecommunications backbone pathways, and connects to the TGB(s) in all telecommunication closets and equipment rooms.
6. Install the TGBs in the telecommunications closets and equipment rooms as close to the panel-board as possible. The TGB should also be located so that the bonding conductor is as short and straight as possible. Maintain clearances required by applicable electrical codes.
7. The TGB shall be insulated from its support with a recommended separation of 2 inches.
8. Properly bond and ground all communications cabinets, equipment racks, raceway, cable rack or tray, and conduit directly to TMGB or TGB. Daisy chaining of equipment is not permitted
9. Refer to the Telecom Grounding diagram in the design documentation (see figure 1).
10. Preparation: Copper and copper alloy connections shall be cleaned prior to connecting.
11. Bonding conductors shall be routed with minimum bends or changes in direction and should be made directly to the point being bonded. Change of direction shall be taken over as wide a radius as possible with a minimum radius of one foot.
12. Make connections only to dry surfaces with paint, rust, oxides, scales, grease and dirt removed. Ensure proper conductivity.
13. Grounding conductors, by gauge, shall be continuous, with splices, from a larger gauge feeder to the last frame or component served by the grounding lead (ex. 750 KCM to 500 KCM to 1/0, etc.).
14. C-Taps from Aisle equalizer to a frame can be the same gauge (ex. E.g., 6 AWG to 6 AWG).
15. Cable to Cable taps shall be made with exothermic weld, or listed compression connectors.
16. No aluminum conductors or connectors shall be used in any bonding and grounding system.
17. Ground bars not supplied as part of a standard assembly shall be copper or tinned copper.
18. Refer Telecommunications Grounding drawings for additional information.
19. Both ends of the grounding conductors shall be equipped with a printed destination label recording the far end termination. The label shall be applied within 6 inches of the termination and be visible from the floor.
20. All metallic items that interact electro-magnetically with Network/Telecommunications equipment shall have their framework bonded and grounded to the Telecommunications grounding system with a minimum #6 AWG grounding conductor. Example includes switch frames, power plants frames, battery stands, storage cabinets and other metallic objects, etc. “Daisy Chaining” or frame to frame connecting of these conductors is NOT permitted.
21. TMGB and TGB shall be stenciled and labeled per HAS requirements.

K. Fences and Gates in the equipment rooms:

1. Ground fences, fence posts and gates to nearest TMGB or TGB.

M. Telecommunications Cable Armored and/or Shielded:
   1. Terminate and ground shield of shielded control cable at one end only, preferably at the control panel end for instrument and communication cable and at the supply end for electronic power cables. Maintain shield continuity by jumpering the ground shield across connection point where it is broken at junction boxes or other splice points.
   2. Connect ground wire in power cable assemblies at each terminal point to a ground bus, if available, or to the equipment enclosure. Do not extend these ground wires through "doughnut" CTs used for ground fault relaying, but do extend ground leads from stress cones. Ground power cable armor and shield at each terminal point.
   3. Bond and ground exposed cable shields and metallic sheaths according to the manufacturer's guidelines. They should also be grounded as close as possible to the point of entrance.
   4. Intra-building telecommunications cabling that is armored or has a metallic shield must be bonded to the building grounding system at each end.

3.04 TESTING

A. Follow Section 01450.

B. Test grounding system before grid trenches are back-filled. Test for ground resistance after installation of underground grid and grounding connections.

C. Install ground access test wells at locations as required for testing, using a pipe surrounding the rod and connections with a cover placed on top at grade level.

D. Test system resistance at each test well using "Fall of Potential" method Per IEEE Standard No. 81-1983) with a maximum resistance of 5 ohms.

E. Upon completion of the electrical system, including all grounding, the Electrical Contractor shall test the system for stray currents, ground shorts, etc. Approved instruments, apparatus, service, and qualified personnel shall be utilized. If stray currents, shorts, etc., are detected, eliminate or correct as required. The test procedure shall be as follows:
   1. Open all main disconnects for the system being tested.
   2. Disconnect the system neutral from the service entrance or step-down transformer neutral connection.
   3. Connect a DC ohmmeter across the system neutral and equipment ground.
   4. An ohmmeter reading in excess of 100 ohms shall indicate that the system neutral and equipment ground are properly isolated.
   5. An ohmmeter reading less than 100 ohms shall indicate that the system contains ground shorts (stray currents) at some point along the system neutral.
   6. Grounded neutrals may be identified by disconnecting individual neutral conductors from the system, one at a time, while monitoring the ohmmeter.
   7. The systems shall be re-tested after correction of all ground shorts is complete.

END OF SECTION

SECTION 270528
INTERIOR COMMUNICATION PATHWAYS

PART 1 GENERAL

1.1 PROJECT SCOPE SUMMARY

1.2 SECTIONS INCLUDES

A. This section includes specifications for the installation of interior communications pathways for the HAS Project Management Office at IAH in Houston, TX.

B. Related Documents: Drawings and general provisions of the Contract, including General and Supplementary Conditions and Division - 1 Specification sections, apply to the work of this section.

C. Interior Communication Pathways are defined to include, but are not limited to innerduct, flexible multi-cell innerduct, conduit, pull boxes, cable/j-hooks, cable trays, supports, accessories, associated hardware and fire stopping materials.

1.3 REFERENCES

A. Related Sections:
1. Section 270526: Telecommunication Grounding and Bonding
2. Section 270543: Exterior Communication Pathways
3. Section 270553: Identification and Labeling of Communication Infrastructure
4. Section 271100: Communication Cabinets and Equipment Rooms
5. Section 271300: Backbone and Riser Media Infrastructure
6. Section 271500: Horizontal Media Infrastructure
7. Section 272100: Data Communication Network Equipment
8. Section 272200: PC, Laptop, Servers and Equipment
9. Section 275113: Audio Communication System
10. Section 281300: Access Control System
11. Section 232313: Video Surveillance Control and Management System

B. American National Standards Institute / Telecommunications Industry Association / Electronic Industries Alliance (ANSI/TIA/EIA): Most current standard revision
1. 569-A, Commercial Building Standard for Telecommunications Pathways and Spaces.
1. 568-B, Commercial Building Telecommunications Cabling Standard

C. American National Standards Institute (ANSI):
1. C80.1 Rigid Steel Conduit - Zinc Coated
2. C80.4 Fittings for Rigid Metal Conduit

D. Federal Specifications (FS):
1. W-C-58C Conduit Outlet Boxes, Bodies Aluminum and Malleable Iron
2. W-C-1094 Conduit and Conduit Fittings Rigid
4. WW-C-581D Coatings on Steel Conduit

E. Building Industry Consulting Services International (BICSI):
   1. Telecommunications Distribution Methods Manual(latest issue)
   2. Customer Owned Outside Plant Design Manual (latest issue)

F. National Electrical Manufacturers Association (NEMA).
   1. VE 1-1998 - Metallic Cable Tray Systems
   2. VE 2-2000 - Cable Tray Installation Guidelines
   3. RN1 Polyvinyl-Chloride (PVC) Externally Coated Galvanized Rigid Steel Conduit and Electrical metallic Tubing
   4. TC2 Electrical Plastic Tubing (EPT) and Conduit (EPC-40 and EPC-80)
   5. TC3 PVC Fittings for Use with Rigid PVC Conduit and Tubing

G. Underwriters laboratories (UL) Cable Certification and Follow Up program
   1. UL 6: Rigid Metal Electrical Conduit.
   2. UL 514B: Fittings for Conduit and Outlet Boxes.
   3. UL 651: Schedule 40 and 80 Rigid PVC Conduit.
   4. UL 651A: Type EB and A Rigid PVC Conduit and High Density Poly-Ethylene (HDPE) Conduit.
   5. UL 886: Electrical Outlet Boxes and Fittings for Use in Hazardous Locations.

H. American Society for Testing Materials (ASTM).
   1. ASTM B633 – specification for Electro-deposit Coating of Zinc on iron and Steel.
   2. ASTM A653 – Specification for Steel Sheet, Zinc-Coated by the Hot-Dip Process.
   3. ASTM A123 - Specification for Zinc (Hot-Galvanized) Coatings on Products Fabricated from Rolled, Pressed, and Forged Steel Shapes, Plates, Bars, and Strip
   4. ASTM A1011 - Specification for Steel, Sheet and Strip, Hot-Rolled, Carbon, Structural, High-Strength Low-Alloy and High Strength Low Alloy with Improved Formability (Formerly ASTM A570 &A607)
   5. ASTM A1008 – Specification for Steel, Sheet, Cold-Rolled, Carbon, Structural, High-Strength Low-Alloy and High-Strength Low-Alloy with Improved Formability (Formerly ASTM A611)

I. National Electrical Code (NEC latest issue).

J. Institute of Electrical and Electronic Engineers (IEEE).

K. Systimax generic specifications: Fiber Optic Outside Plant Cable, Latest issue.

L. International Standards Organization/International

M. Electromechanical Commission (ISO/IEC) DIS 11801

N. Conflicts:
   1. Between referenced requirements: Comply with the one establishing the more stringent requirements.
   2. Between reference requirements and contract documents: Comply with the one establishing the more stringent requirements.

1.4 SUBMITTALS

A. Submit Shop Drawings to include but not limited to plan and section drawings detailing proposed communication pathway routing prior to installation. Communication pathway installation plan to include but not limited to:
   1. Room penetration plan.
   2. Communication pathway extension plan.
   3. Riser conduit anchoring plan.
   4. Conduit chase plan.
   5. Communication pathway labeling plan.
   6. Junction box, gutter and pull-box labeling plan.

B. Shop Drawings to be submitted and approved before implementation is started. Shop Drawings to be submitted in accordance with Specification 01340.

C. Submit prototype test reports for all vault covers verifying conformance to the specification requirements in this document and HAS.

D. Submit catalog data sheets of conduit, innerduct, raceway, cable tray, cable hook and associated hardware. Product data to include, but not limited to materials, finishes, approvals, load ratings, and dimensional information.

E. Test Reports: Submit certified test reports indicating compliance with material reference standard indicated for material performance characteristics and physical properties of fire stopping materials

F. Certificates: Submit product certificates, signed by manufacturer certifying materials comply with specified performance characteristics and physical properties of fire stopping materials.

G. Copy of Building Industry Consulting Services International (BICSI) Registered Communication Distribution Designer (RCDD) certificate for Contractor's on-site RCDD supervisor. RCDD to supervise all parts of communications installation at all times.

1.5 QUALITY ASSURANCE

A. Verify conduit, raceway, cable tray runs, etc do not interfere with existing or new systems within each facility.

B. Fire stopping: Manufacturer trained and approved installer to perform fire stopping work who has specialized in the installation of work similar to that required for this project.

C. Communication Pathway minimum Clearances:
   1. Motors or transformers: 4 feet
   2. Power cables and conduits: 1 foot parallel, 3 inches crossover
   3. Fluorescent lights: 5 inches
   4. Above ceiling tiles: 3 inches
   5. Access above cable tray: 12 inches
   6. Hot Flues, Steam pipes, Hot water pipes and other hot surfaces: at least 6"

D. Furnish products of latest proven design, new and in current production. Do not use obsolete components or out-of-production products.

E. Assure that the "as installed" system is correctly and completely documented including engineering drawings, manuals, and operational procedures in such a manner as to support maintenance and future expansion of the system.

F. All installed materials and accessories shall be new from the manufacture. No used components will be accepted by HAS.

G. All Documentation submittals shall be reviewed by the supervising RCDD and stamped prior to submittal.

H. Contractor Qualifications:
   1. The Contractor shall submit references and other related evidence of installation experience for a period of three years prior to the issue date of this Specification.
   2. ALL work shall be supervised on-site by a BICSI RCDD. Must demonstrate knowledge and compliance with all BICSI, ANSI/TIA/EIA, UL, and NEC standards and codes.

I. HAS retains the right to have access and inspect all work during the entire duration of the project and any items that do not adhere to the standards, reference, contract, bid, or project documents will be corrected immediately at NO cost to HAS.

J. All communication media will be installed in conduit or cable tray unless alternate method has been approved by HAS/IT.
   1. Exception: MATV/CATV horizontal media must be installed in conduit from faceplate to MDF/IDF

PART 2 PRODUCTS

2.1 GENERAL

A. Where conduit, pull boxes, cable tray and other raceway sizes are not specifically shown on contract drawings. All communication pathways shall be sized in accordance with the requirements of BICSI and the NEC. No conduit shall be less than 1". [Except for those locations specified in the contract documents under section 281300 Access Control with HAS approval.]

B. All raceways exposed to the elements or possible physical damage or installed below 8 feet shall be Rigid Metal Conduit.

C. Raceway exposed to elements, not exposed to physical damage and above 8 feet shall be Intermediate Metal Conduit.

D. Raceways installed in stud walls or above suspended ceilings shall be Electrical Metallic Tubing.

E. All backbone and riser conduits installed shall be populated with MaxCell flexible

innerduct. Cable fill ratio not to exceed 40%.

2.2 CONDUIT AND ACCESSORIES

A. MANUFACTURES:
1. Allied
2. Triangle
3. Wheatland

B. Rigid Steel Conduit shall pass all bending, ductility, and thickness of zinc coating in ANSI C80.1 and UL 6. Conduit shall be galvanized have threaded end with 1” minimum size and 4” maximum size. Fittings shall be cast iron or alloy steel, threaded and galvanized.

C. Intermediate Metal Conduit (IMC) shall be manufactured in accordance with UL 1242. Conduit shall be low carbon, hot-dipped galvanized inside and out, with threaded ends, 1” minimum size, 4 inch maximum size. Fittings shall be cast iron or alloy steel, threaded and galvanized.

D. Electrical Metallic Tubing (EMT) shall be manufactured in accordance with UL 797 and ANSI C80.3. EMT shall be high-strength, zinc-coated, 1 inch minimum size. EMT may be used for sizes greater than 2" where physically protected. EMT shall not be utilized forservice entrance conductors. Fittings shall be of same finish and material as tubing. Fittings shall be compression type with insulated throat.

E. Expansion Joint Fittings: OZ type AX or Appleton type XJB, watertight, permitting two-way movement up to 4 inches, equipped with bonding jumpers around or through each fitting.

F. Thruwall Sealing Fittings: Type WSK by O-Z Gedney Company.

G. Fire-Seal Fittings: Type CFSI by O-Z Gedney Company.

H. Sealing Material for Sealing Fittings: Chico X Fiberdam, and Chico A sealing compound, or Chico A-P interpak by Crouse-Hinds or Apelco sealing cement and fiber filler by Appleton.

I. Insulated Bushings: Type B or SBT, as applicable, by O-Z Gedney or series B1900, series BU500 or series TC700, as applicable, by Steel City.

J. Provide a measured pull tape in each empty conduit, empty innerduct for backbone and riser pathways.

K. Provide a pull string for all horizontal conduits with a minimum pulling tension of 200 pounds.

L. Thread lubricant/sealant shall be Crouse-Hinds type STL or T & B Kopr-Shield except, when required on joints for heat producing elements such as lighting fixtures, it shall be Crouse-Hinds type HTL.

M. PVC Conduit shall not be used in intercommunication pathways. Except when encased in concrete.

2.3 FLEXIBLE MULTI-CELL INNERDUCT

A. Manufacturers:
1. MaxCell
2. Or HAS approved equivalent

B. Flexible Innerduct
1. Flexible innerduct is the HAS standard for multi-path applications within conduit.
2. All riser/backbone fiber shall be installed in flexible innerduct.
3. Flexible Innerduct shall be UL Listed with Flame Propagation compliant with UL 2024A.
4. All flexible innerduct shall be installed per manufacture requirements.
5. Only manufacturer's fittings, transition adapters, terminators, accessories and installation kits shall be used.
6. All flexible innerduct will be populated with a measured pull tape.
7. All interior flexible innerduct shall be plenum rated.
8. Flexible innerduct shall only be used when installed in conduit and shall consist of a different color for the maxcell.

MaxCell 4" 3 Cell

Min Conduit ID	Suggested Product	Max # of Packs	Max # of Cables	Maximum Cable Diameter per Cell	Rec. Pull Length*	Max Pull Length*
3"	MaxCell 4" 3 Cell	1	3	1.34"	1500'	2000'
4"	MaxCell 4" 3 Cell	2	6	1.34"	1500'	2500"
5"	MaxCell 4" 3 Cell	3	9	1.34"	1500'	2500'
6"	MaxCell 4" 3 Cell	4	12	1.34"	1500'	2500'

*Use of Optical Fiber Nonconductive Riser (OFNR) cable may result in reduced pulling lengths

MaxCell 3" 3 Cell

Min Conduit ID	Suggested Product	Max # of Packs	Max # of Cables	Maximum Cable Diameter per Cell	Rec. Pull Length*	Max Pull Length*
3"	MaxCell 3" 3 Cell	2	6	1.03"	1200'	2000'
4"	MaxCell 3" 3 Cell	3	9	1.03"	1500'	2500"
5"	MaxCell 3" 3 Cell	4	12	1.03"	1500'	2500'
6"	MaxCell 3" 3 Cell	5	15	1.03"	1500'	2500'

*Use of Optical Fiber Nonconductive Riser (OFNR) cable may result in reduced pulling lengths

MaxCell 2" 3 Cell

Min Conduit ID	Suggested Product	Max # of Packs	Max # of Cables	Maximum Cable Diameter per Cell	Rec. Pull Length*	Max Pull Length*
2"	MaxCell 2" 3 Cell	1	3	.70"	800'	1500'

*Use of Optical Fiber Nonconductive Riser (OFNR) cable may result in reduced pulling lengths

2.4 INNERDUCT

B. Manufacturers:
1. Carlon
2. Pyramid
3. Or HAS approved equivalent

C. Innerduct
1. All fiber placed in cable tray shall be installed in corrugated innerduct.
2. One-inch corrugated, non-metallic innerduct.
3. Innerduct shall be UL Listed with Flame Propagation compliant with UL 2024.
4. Only manufacturer's fittings, transition adapters, terminators and fixed bends shall be used.
5. All empty innerduct will be populated with a measured pull tape.
6. Where more than one innerduct is routed in a conduit, each innerduct shall consist of a different color from end to end (ex. Orange, Blue, Black and White). Do not couple innerduct of different colors without HAS approval.
7. All interior innerduct shall be plenum rated, unless installed in conduit.

2.5 CABLE TRAYS

A. Manufacturers:
1. B-Line
2. Cope
3. Panduit

B. CABLE TRAY

1. Except as otherwise indicated, provide metal cable trays, of types, classes and sizes indicated; with splice plates, bolts, nuts and washers for connecting units. Construct units with rounded edges and smooth surfaces; in compliance with applicable standards; and with the following additional construction features.
2. Materials and Finish: Material and finish specifications for each tray type are as follows:

a. Aluminum: Straight section and fitting side rails and rungs shall be extruded from Aluminum Association Alloy 6063. All fabricated parts shall be made from Aluminum Association Alloy 5052.
b. Pre-galvanized Steel: Straight sections, fitting side rails, rungs, and covers shall be made from steel meeting the minimum mechanical properties in accordance with ASTM A653 SS.
c. Hot-dip Galvanized Steel: Straight section and fitting side rails and rungs shall be made from steel meeting the minimum mechanical properties of ASTM A1011 SS, Grade 33 for 14 gauge and heavier, ASTM A1008, Grade 33, Type 2 for 16 gauge and lighter, and shall be hot-dip galvanized after fabrication in accordance with ASTM A123. All covers and splice plates must also be hot-dip galvanized after fabrication; mill galvanized covers are not acceptable for hot-dipped galvanized cable tray.
d. Stainless Steel: Straight section and fitting side rails and rungs shall be made of AISI Type 304 or Type 316 stainless steel. Transverse members (rungs) or corrugated bottoms shall be welded to the side rails with Type 316 stainless steel welding wire.
e. Rigid PVC (Channel), ABS (Fittings) with the Flammability rating 94V-0, UL listed to 2024A Optical Fiber Cable Routing Assemblies Compliant with the applicable tests in Telcordia GR-63-CORE Network Equipment Building Systems Level 3

TYPE OF TRAY SYSTEMS

A. Ladder type trays shall consist of two longitudinal members (side rails) with transverse members (rungs) welded to the side rails. Rungs shall be spaced 6 or 12 inches on center. Rungs shall have a minimum cable-bearing surface of 7/8 inch with radiused edges. No portion of the rungs shall protrude below the bottom plane of the side rails. Each rung must be capable of supporting the maximum cable load, with a safety factor of 1.5 and a 200 pound concentrated load when tested in accordance with NEMA VE-1, section 5.4.

B. Ventilated trough type trays shall consist of two longitudinal members (side rails) with a corrugated bottom welded to the side rails. The peaks of the corrugated bottom shall have a minimum flat cable-bearing surface of 2-3/4 inches and shall be spaced 6 inches on center. To provide ventilation in the tray, the valleys of the corrugated bottom shall have 2-1/4 inch by 4 inch rectangular holes punched along the width of the bottom.

C. All tray sizes and types shall have a minimum of 4 inch usable load depth.

D. All straight sections shall be supplied in standard 10 foot length, except where shorter lengths are permitted to facilitate tray assembly lengths as shown on drawings.

E. Tray widths shall be 18, 24, or 36 inches. Refer to Drawings for sizing.

F. All fittings must have a minimum radius of 24 inches.

G. Splice plates shall be the bolted type made as indicated below for each tray type. The resistance of fixed splice connections between adjacent sections of tray shall not exceed .00033 ohms. Splice plate construction shall be such that a splice may be located anywhere within the support span without diminishing rated loading capacity of the cable tray.
   1. Aluminum Tray - Splice plates shall be made of 6063-T6 aluminum, using four square neck carriage bolts and serrated flange locknuts. Hardware shall be zinc plated in accordance with ASTM B633, SC1.
   2. Steel (including Pre-galvanized and Hot-dip galvanized) - Splice plates shall be manufactured of high strength steel, meeting the minimum mechanical properties of ASTM A1011 HSLAS, Grade 50, Class 1. Hardware shall be zinc plated in accordance with ASTM B633 SC1 for pre-galvanized cable trays, or Chromium Zinc in accordance with ASTM F-1136-88 for hot-dip galvanized cable trays.

H. Cable Tray Support shall be placed so that the support spans do not exceed maximum span indicated on drawings or by the manufacturer. Supports shall be Trapeze style support. Cable trays installed adjacent to walls shall be supported on wall mounted brackets as specified by the manufacturer.

I. Trapeze hangers shall be supported by 3/8 inch (minimum) diameter all thread rods.

J. Accessories shall be furnished as required to protect, support, and install a cable tray system. Accessories shall consist of but are not limited to; section splice plates, expansion plates, blind-end plates, specially designed ladder dropouts, water fall plates, barriers, etc.

K. All cable tray components and accessories will be from the same manufacturer. Parts from different manufacturer will not be intermixed.

2.6 CABLE HOOK SYSTEMS (J-Hooks)

A. Cable hooks may not be used without prior written approved by HAS/IT.

B. Cable hooks shall have a flat bottom and provide a minimum of 1-5/8 inch cable bearing surface.

C. Cable hooks shall have 90-degree radiused edges to prevent damage while installing cables.

D. Cable hooks shall be designed so the mounting hardware is recessed to prevent cable damage.

E. Cable hooks shall have a cable latch retainer to provide containment of cables within the hook. The retainer shall be removable and reusable.

F. Cable hooks shall be factory assembled for direct attachment to walls, hanger rods, beam

flanges, purlins, strut, floor posts, etc. to meet job conditions.

G. Cable hooks for non-corrosive areas shall be pre-galvanized steel, ASTM A653. Where additional strength is required, cable hooks shall be spring steel with a zinc-plated finish, ASTM B633, SC3.

H. Cable hooks for corrosive areas shall be stainless steel, AMERICAN IRON STEEL INSTITUTE Type 304.

I. All Cable Hooks shall be supported with minimum ¼" all thread with the appropriate fasteners.

2.7 FIRESTOPPING MATERIALS

A. Manufacturers:
1. Johns Manville
2. Hilti
3. 3M
4. Unique

B. Description:
1. Performance requirements: Provide firestopping systems that are produced and installed to resist spread of fire according to requirement indicated, resist passage of smoke and other gases, and maintain fire resistance rating of assembly.
   a. F-Rated Systems: in accordance with ASTM E 814
   b. T-Rated Systems: in accordance with ASTM E 814
2. Fire stopping flame spread performance requirements: Provide products with flame-spread ratings of less than 25 and smoke development ratings of less than 50 as determined in accordance with ASTM E 84.
3. Fire Stopping UL performance requirements: Provide products with UL ratings specified for assembly indicated as determined in accordance with UL listings.

2.8 JUNCTION BOXES/PULL BOXES

A. All pull boxes shall be constructed with a minimum of 14 gauge galvanized steel with an ANSI 61 grey polyester powder finish inside and out over phosphatized surfaces or galvanizes steel unless otherwise specified.

B. All pull boxes shall have flat, removable covers fastened with plated steel screws with unique keyhole screw slots in the cover to permit removal of the cover without extracting screws unless otherwise specified.
1. All removable box covers shall be connected to box with a safety strap or chain for all boxes 8 X 8 or larger.

C. All pull boxes shall provide the appropriate provisioning for grounding.

D. All pull boxes shall be NEMA Type 1 and sized according to the table below unless otherwise specified.

Maximum Trade Size of Conduit (inches)	**Minimum Box Size (inches)**			**For Each Additional Conduit Increase Width (Inches)**
	Width	Length	Depth	
1	4	16	3	2
1.25	6	20	3	3
1.5	8	27	4	4
2	8	36	4	5
2.5	10	42	5	6
3	12	48	5	6
3.5	12	54	6	6
4	15	60	8	8

2.9 WALL BACKBOARD

A. Reference Specification 271100 Section 2.04

PART 3 EXECUTION

3.1 GENERAL

A. Raceways shall be mechanically and electrically connected to all boxes and fittings and shall be properly grounded per NEC.

B. The routing and location of all conduits, cable tray, cable hooks and other raceways shall be coordinated with other trades prior to and during building construction to avoid delays and conflicts.

C. Where raceways pass through walls, partitions and floors, seal penetrations to provide a neat installation which will maintain the integrity of the waterproofing or fireproofing, as applicable, of the structure. Coordinate installation requirements with roofing installer where conduits pass through the roof.

D. All raceways entering a building from underground shall be sealed to prevent water, moisture, gas, or any other foreign matter from entering the building. Service conduits shall be sealed in accordance with NEC 230-8.

E. Contractor's on-site RCDD supervisor shall review, approve and stamp all shop drawings,

coordination drawings and records drawings.

F. Do NOT route communication pathways under HVAC condensing units.

G. Expansion Fittings:
1. Raceways shall be provided with expansion fitting where necessary to compensate for thermal expansion and contraction.
2. Use expansion-deflection fittings on conduit crossing structural expansion joints and on exposed conduit funs where necessary. Provide bonding jumpers across fittings in metal raceways systems

3.2 CONDUIT INSTALLATION

A. Rigid and IMC shall be installed with threaded fittings and couplings.

B. All metallic couplings, connectors and fittings shall be malleable iron or steel and finished with zinc plating or by galvanizing.

C. All conduits shall be plugged immediately upon installation to prevent the entrance of construction dirt and debris. All conduits shall be swabbed and cleaned before wires are pulled.

D. Expansion fittings shall be utilized in all cases where conduits pass through building expansion joints. Fittings shall be of an approved weatherproof telescopic type permitting a movement of up to four inches and shall be provided with approved bonding jumpers around or through the fitting.

E. Connection of Conduit to pull / junction Boxes and Enclosures:
1. Connection to NEMA 1 type boxes and enclosures:
   a. Rigid: Install insulated bushings and double locknuts.
   b. IMC: Install insulated bushings and double locknuts.
   b. EMT: Install compression box connectors with insulated throats.
2. Connection to NEMA 3R, 4, 4X, and 12 type boxes: Install insulated bushings and sealing locknuts or hubs.
3. When conduits enter floor mounted enclosures from below and there is no sheet metal to which to attach; install grounding bushings on the conduit. Bond bushings to ground bus using a conductor the same size as required for an equipment grounding conductor sized for the given circuit.
4. Install sealing bushing within all conduits which have entered a building from outside, whether from above or below grade.

F. No section of conduit shall be longer than 30m (100ft) or contain more than two 90 degree bends between pull points, pull boxes, or reverse bends. Offset is considered to be 2 equal bends in opposite direction, the two angles of which cannot exceed 45 degrees in

each direction. In all cases, the two angles comprising the offset shall be considered 90 degrees. Any conduit bend less than 90 degrees and is not associated with the offset as described herein is considered a 90 degree bend.

G. The inside radius of bends in conduit shall be:
   1. 6 times the internal diameter for 2" or less.
   2. 10 times the internal diameter for greater than 2".

H. With prior HAS/IT APPROVAL. For Backbone and riser conduit runs ONLY (2" to 4") a special LBD condulet (Crouse-Hinds or approved equal) may be used for CMU penetration where a swept 90 will not work. LBD condulets are designed for communications cable installation to maintain bend radius requirements.

I. A measured pull tape shall be placed in all installed conduit with pull strength of 200 pounds.

J. Any single conduit run extending from a Telecommunication Room shall not serve more than one outlets.

K. All communications conduits shall be identified with color coded orange tape marked "Communications" every 50 feet. Tag conduit termination points (to include J-box locations) with the origination and destination location.

L. Conduit shall be reamed to eliminate sharp edges and terminated with an insulated bushing.

M. Conduit protruding through the floor shall be terminated at a minimum of 4 inches above the floor surface.

N. All stubbed conduit ends shall be provided with a ground bushing.

O. All conduit penetrations shall be provided with the proper conduit sleeves.
   1. Sleeves shall extend three inches AFF or four inches below finished ceiling, with a bushing.
   2. Sleeves shall be installed in the communications room floor or ceiling a minimum of six inches on center from the wall.
   3. Conduit floor sleeves shall be spaced to allow space for insulted ground bushing for cable protection.
   4. Shall be installed in a single tier or row from left to right horizontally.
      If two tiers or rows are required the conduits shall be staggered minimum of 2 inches between tiers.
   5. Cable support anchors shall be installed 18 to 24 inches above the sleeves.

P. All cable (horizontal, riser or backbone) wall or ceiling penetrations shall be provided

with the proper conduit sleeves.

1. Sleeves shall extend three inches AFF or four inches below finished ceiling, with a bushing.
2. Sleeves shall be installed in the floor or ceiling a minimum of two to four inches on center from the wall.
3. Sleeves shall be installed in the walls at a minimum of two inches extended on each side of the wall.
4. Cable floor, ceiling and wall sleeves shall be spaced to allow space for ground bushing and insulated bushing for cable protection.
5. Shall be installed in a single tier or row from left to right horizontally.
6. If two tiers or rows are required the conduits shall be staggered minimum of 2 inches between tiers.
7. Cable support anchors shall be installed 18 to 24 inches above the sleeves.

Q. All conduit and cabinet entrances shall be sealed with an approved, re-enter able sealant material to prevent ingress of water, dust or other foreign materials.

R. Conduit shall not be embedded in the required fire protective covering of a structural member that is to be individually encased in accordance with Building Officials and Code Administrators International, Inc. (BOCA).

S. Install all exposed conduit parallel or perpendicular to lines of existing construction and grouped together where possible, without interfering with use of premises or working areas. Prevent safety hazards and interference with operating and maintenance procedures.

T. ALL Conduit Sizing and supports:

1. Support conduit 2 inches and larger at 10 feet on center maximum, and conduit less than 2 inches {1½ inch and smaller}at eight feet on center maximum.
2. Fasten 1½ inch and smaller conduit to concrete, masonry or steel with either one-hole malleable iron conduit straps, or "Korn" clamps, or U-bolts; for larger diameters, use two-hole straps. Use "clamp backs" for strapping conduits to planar surfaces.
3. Multiple runs shall be supported on channel adequately secured to walls or hung from structure above with conduits fastened to channel with clamps designed for the purpose.
4. When installation requires trapeze/rack support minimum 3/8 inch all thread shall be used.
5. When installation requires a single 1 inch conduit ¼ inch all thread shall be used. No hanger wire for any installation.
6. When installation requires single conduit greater than 1 inch, 3/8 inch all-thread shall be used.
7. Cable fill rates should not exceed 40% of the cross sectional area of the installed conduit.

U. Horizontal Conduit Routes:

1. Horizontal (station) conduit is defined as the conduit run between the communications outlet and the cable tray or communications room as indicated on Drawings.
2. Each horizontal conduit run shall be a one-inch metallic conduit and shall be home run from each communications outlet box to the equipment room, terminating equipment or cable tray, as indicated in Drawings.
3. Each single horizontal conduit run shall be provided with a junction or pull box every 30m (100ft) or contain more than two 90 degree bends between pull points, pull boxes, or reverse bends. Offset is considered to be 2 equal bends in opposite direction, the two angles of which cannot exceed 45 degrees in each direction. In all cases, the two angles comprising the offset shall be considered 90 degrees. Any conduit bend less than 90 degrees and is not associated with the offset as described herein is considered a 90 degree bend.

4 Each dual horizontal conduit run shall be provided with a junction or pull box every 30m (100ft) or contain more than two 90 degree bends between pull points, pull boxes, or reverse bends. Offset is considered to be 2 equal bends in opposite direction, the two angles of which cannot exceed 45 degrees in each direction. In all cases, the two angles comprising the offset shall be considered 90 degrees. Any conduit bend less than 90 degrees and is not associated with an offset as described herein is considered a 90 degree bend. The quantity of conduits entering the junction or pull box shall equal the number of conduits exiting the junction or pull box.

5. Each terminating (outlet end) conduit connection shall be provided with the proper connecting insulated bushing or fitting.
6. Each originating end (communications room end) shall be provided with the proper connecting insulated ground bushing and properly bonded to ground.
7. If flexible conduit is required install must not be longer than 7 feet and must have HAS/IT approval prior to installation.

V. Horizontal conduit entrance in communications rooms – wall entry
   1. Horizontal conduits shall enter the communications room wall 12 to 18 inches above the top of the cable tray. Maintain cable bend radius with supporting device as required.
   2. Conduit wall stubs shall be spaced in increments equal to the conduit outside diameter (OD) from each other.
   3. All conduit wall stubs shall be extended to the terminating equipment, electronics, or cable tray, as noted in Drawings.
   4. Conduit crossovers are not permitted.

W. Horizontal conduit entrance in communications rooms – ceiling entry
   1. Horizontal conduits shall enter or be extended from the equipment room ceiling 12 to 18 inches above the top of the cable tray.
   2. Ceiling conduit stubs shall be spaced in increments equal to the conduit OD from each other.
   3. All ceiling conduit stubs shall be extended to the terminating equipment, electronics, or cable tray, as noted in Drawings.
   4. Conduit crossovers are not permitted.

X. Horizontal conduit entrance in communications rooms – floor entry
   1 Horizontal conduits shall enter the communications room floor two inches to four inches on center from the wall and shall be stubbed 4 inches AFF.
   2 Conduit floor stubs shall be spaced in increments equal to the conduit OD from each other.
   3 Conduit crossovers are not permitted.

Y. Horizontal conduit to cable tray
   1. No horizontal conduits runs shall be attached to the cable tray in any fashion.
   2. Conduit terminating end shall be self supporting above the cable tray side rail. Not attached.

Z. Horizontal Junction/Outlet Boxes
   1. Each horizontal conduit shall be terminated into an outlet box.
   2. Each outlet box shall be a deep four-inch square junction box with a minimum of two one-inch knockouts on each of the sides.
   3. Each conduit home run shall be provided with a deep 4-inch square junction box (w/cover) at 100-foot intervals and six inches above each ceiling and wall intersection.

AA. Backbone/Riser conduit entrance in communications rooms – wall entry
   1. BB/Riser conduits shall enter the communications room wall a minimum of 24 inches

above the top of the cable tray.

2. Conduit wall stubs shall be spaced in increments to equal the conduit OD from each other.
3. BB/Riser conduits shall be installed in a single tier or row from left to right horizontally.
   a. If two tiers or rows are required the conduits shall be staggered between tiers.
   b. No more then two tiers or rows are permitted.
4. All conduit wall stubs shall be extended to and over the cable tray to access cable tray pathway.
5. All BB/riser conduit stubs shall be provided with the proper universal drop-out/ waterfall cable exit runway, which shall be supported by and mounted to channel strut.
6. Conduit crossovers are not permitted.

BB. Backbone/Riser conduit entrance in communications rooms – floor entry
1. BB/Riser conduits shall enter the communications room floor two inches to four inches on center from the wall and shall stub up six inches AFF.
2. Conduit floor stubs shall be spaced in increments to equal the conduit OD from each other.
3. BB/Riser conduits shall be installed in a single tier or row from left to right horizontally.
   a. If two tiers or rows are required the conduits shall be staggered between tiers.
   b. No more then two tiers or rows are permitted.
4. Exiting cable shall be extended to the bottom of the cable tray and be provided with cable support anchors and secured with supporting hardware every six inches above the conduit bushings.
5. Conduit floor stubs shall be extended 6 inches from wall on center and 6 inches above AFF.
6. The BB/riser cable shall be extended in the cable tray to the terminating equipment, as noted in the Drawings.
7. Conduit crossovers are not permitted.

3.3 Cable Tray Installation

A. Cable tray shall be supported as follows:
1. Where tray is suspended above equipment cabinets it shall be supported by a Trapeze type hanger and per manufacture instructions. In all other applications, the tray shall be supported by uni-strut trapeze type hangers affixed to the structure above via minimum 3/8-inch threaded rod.
2. Threaded rod shall be fitted with a 6-inch long tube where it resides in cable tray to protect cables.
3. Minimum of 12 inches of vertical clearance above all cable tray.

B. Installation shall be in accordance with equipment manufacturer's instructions, and with

recognized industry practices to ensure that cable tray equipment comply with requirements of NEC and applicable portions of NFPA 70B. Reference NEMA-VE2 for general cable tray installation guidelines.

C. Provide sufficient space encompassing cable trays to permit access for installing and maintaining cables.

D. Cable tray fitting supports shall be located such that they meet the strength requirements of straight sections. Install fitting supports per NEMA VE-2-2006 guidelines, or in accordance with manufacturer's instructions.

E. A support must be place within 24 inches on each side of a connection or fitting.

F. Maintain a minimum of 12 inches of clearance above cable tray for cable installation. Maintain a minimum of 3 inches between ceiling tile and bottom of cable tray support.

G. Cable tray installation will be completed in one continuous run with no separations between sections.

H. Vertical cable or ladder racks shall be used to route cable up and down the wall.

I. Dropout/Water Fall of the same make and size of the cable tray shall be used to route cables in or out of the tray.

J. Matted “T” and elbows shall be used of the same make and size for all interchanges and directional changes

3.4 JUNCTION BOX/PULL BOX INSTALLATION

A. Pull boxes shall be installed in sections of conduit that are 100 feet in length, or that contain more than two 90 degree bends.

B. A pull box shall NOT be used in lieu of a conduit bends.

C. All pull boxes shall be installed in an easily accessible location with unobstructed entry to the pull box access panel.

D. Pull boxes 6x6 or larger shall be supported on all four corners in such a manor that the pull box is not supported by the cable running through or conduit attached to the pull box.

3.5 CABLE HOOK INSTALLATION (J-HOOKS)

A. Cable hook systems must be pre approved by HAS/IT prior to installation.

B. Installation and configuration shall conform to the requirements of the ANSI/ EIA/TIA Standards 568A & 569, NFPA 70 (National Electrical Code), and applicable local codes.

C. Cable hooks shall be capable of supporting a minimum of 30 pounds with a safety factor of 3.

D. Spring steel cable hooks shall be capable of supporting a minimum of 100 pounds with a safety factor of 3 where extra strength is required.

E. Cable Hook spacing maximum 4 feet on center.

F. Maintain maximum cable sag between cable hooks of 12 inches.

G. Do not fill cable hook greater than manufacturer recommended guidelines.

3.6 FIRESTOPPING MATERIAL INSTALLATION

A. Comply with manufacturer's product data, including product technical bulletins, product catalog installation instruction, and product carton instruction for installation.

B. Verify substrate conditions are acceptable for product installation in accordance with manufacturer's instructions.

C. Install fire stopping to comply with performance requirements specified herein.
   1. Install fire stopping to comply with listed fire rated assemblies in accordance with ASTM and UL requirements
   2. Installer shall be trained and approved by the manufacturer

D. Protect installed products from damage during construction operations until final completions.

E. Inspection: Code official or building inspectors to review proper installation using manufacturer guidelines.

END OF SECTION

SECTION 270543
EXTERIOR COMMUNICATION PATHWAY

PART 1 GENERAL

1.1 PROJECT SCOPE SUMMARY

1.2 REFERENCES

A. Related Sections:
1. Section 270526: Telecommunication Grounding and Bonding
2. Section 270528: Interior Communication Pathways
3. Section 270553: Identification and Labeling of Communication Infrastructure
4. Section 271100: Communication Cabinets and Equipment Rooms
5. Section 271300: Backbone and Riser Media Infrastructure
6. Section 271500: Horizontal Media Infrastructure
7. Section 272100: Data Communication Network Equipment
8. Section 272200: PC, Laptop, Servers and Equipment
9. Section 275113: Audio Communication System
10. Section 281300: Access Control System
11. Section 232313: Video Surveillance Control and Management System

B. Building Industry Consulting Services International (BICSI):
1. Telecommunications Distribution Methods Manual (Latest Issue)
2. Customer Owned Outside Plant Design Manual (Latest Issue)

C. HS20 (AASHTO) highway Fatigue Loading

D. American National Standards Institute/Telecommunications Industry Association/Electronic Industries Association (ANSI/TIA/EIA):
1. 569 Commercial Building Standard for Telecommunications Pathways and Spaces
2. 758 Customer-Owned Outside Plant Telecommunications Cabling Standard

E. Conflicts:
1. Between referenced requirements: Comply with the one establishing the more stringent requirements.
2. Between reference requirements and contract documents: Comply with the one establishing the more stringent requirements.

1.3 SUBMITTALS

A. Submit plan and section drawings detailing proposed communication pathway routing prior to installation. Communication pathway installation plan to include but not limited:
1. Room penetration plan.
2. Communication pathway extension plan.
3. Conduit chase plan.
4. Duct bank pathway

B. Shop Drawings to be submitted and approved before implementation is started. Shop Drawings to be submitted in accordance with Specification 01340.

C. Submit calculations associated with sizing and arrangements of ducts and cables.

D. Manufacturers‟ data: To include but not limited to part numbers, data sheets and detailed descriptions, for ALL proposed equipment and material.

E. Submit a schematic with the COMM Vault/MH/HH duct bank layout showing the wall to wall, center to center and a MH butterfly detail down to individual flexible innerduct and hard innerduct assignments in AutoCAD.

F. Submit plan and section drawings detailing proposed vault specifications.

G. Copy of Building Industry Consulting Services International (BICSI) Registered Communication Distribution Designer (RCDD) certificate for Contractor‟s on-site RCDD supervisor. RCDD shall supervise all parts of communications installation at all times.

1.4 QUALITY ASSURANCE

A. Verify duct banks do not interfere with existing or new underground facilities. Follow Section 01761.

B. Follow Appendix B of National Electrical Code.

C. Assure that the "as installed" system is correct and complete per construction documents: including engineering drawings, manuals, and operational procedures in such a manner as to support maintenance and future expansion of the system.

D. Contractor Qualifications:
   1. The Contractor shall submit references and other related evidence of installation experience for a period of three years prior to the issue date of this Specification.

   2. ALL work shall be supervised on-site by a BICSI RCDD. Must demonstrate knowledge and compliance with all BICSI, TIA/EIA, UL, and NEC standards and codes.

E. HAS retains the right to access and inspect all work during the entire duration of the project and any items that do not adhere to the standards, reference, contract, bid, or project documents will be corrected immediately at the expense of the contractor.

1.5 SHIPPING AND HANDLING

A. Follow Section 01450.

B. Clearly mark containers "For Communication Material Only".

PART 2 PRODUCTS

2.1 MANUFACTURERS

A. Conduit Measuring Tape:
1. Neptco
2. Greenlee
3. Garvin Industries

B. Caution Tape:
1. Reef Industries
2. Repnet
3. Panduit

C. Maintenance/Hand Hole Covers
1. Ejco
2. Neehan Foundry
3. Dabico Inc.
4. Inland Foundry
5. Oldcastle

D. Flexible Multi-cell Innerduct
1. MaxCell
2. Or HAS approved equivalent

E. Plastic Innerduct: HAS-IT approval required before installation.
1. Carlon
2. Pyramid
3. Or HAS approved equivalent

2.2 MATERIALS

A. Ducts: Schedule 40 rigid PVC following this section, with non-magnetic universal interlocking type spacers for both horizontal and vertical duct arrangements. Duct bank will be encased in concrete with orange color dye.

B. Duct Spacers and Hardware: On all conduit arrays the contractor shall furnish and install a conduit spacer system as required to maintain uniform conduit spacing. The system shall consist of plastic spacers that interlock vertically and horizontally. A spacer assembly shall consist of base spacers, intermediate spacers and top spacers to provide a completely enclosed and locked in conduit assembly. Install spacers per manufacturer‟s instructions and provided at 5 foot intervals.

C. Plastic conduit and fittings shall conform to the requirements of Fed. Spec. W-C-1094 and shall be rigid PVC Schedule 40, with non-magnetic universal interlocking type spacers for both horizontal and vertical duct arrangements.

D. Maintenance Hole (MH) shall be minimum 60" x 102" x 78" constructed with a minimum 5 inch thick concrete (or HAS approved equivalent).
   1. MH shall be pre-formed
   2. Include a minimum 12" sump drain
   3. Include a 1" knockout for ground rod connection
   4. Fitted with pulling irons at each end.
   5. All MH internal components such as racking and ground strips shall be field installable and shall meet the requirements of ANSI/TIA/EIA, NEC, and HAS requirements.

E. MH cover: Shall require a maximum 35-lb lift to open and close
   1. Cover and service lettering shall be abrasion, corrosion, chemical resistant and slip resistant surface.
   2. Door shall use a non-load bearing, internally mounted hinge mechanism and shall have a high visibility warning label affixed to the underside
   3. The cover shall be removable from the cover frame assembly
   4. A prototype test report for each cover style to be installed shall be submitted. The testing shall be conducted by an independent testing company and shall conform to the following:
      a. Carry a proof load of 29,250lbs applied at 150 psi without deformation or injury to the cover
      b. Carry a maximum HS20 service load, applied at 100 psi for a minimum of 525,000 cycles without losing its service life
      c. Carry a maximum HS20 service load applied continuously at 100 psi for twelve continuous hours without exhibiting an increase in residual deflection, as measured at the center of the cover, of more than 0.4% (0.004)
      d. Covers have a modulus of elasticity of, at least, 3,500,000 psi, a flexural strength of 53,000 psi and a compressive strength of 62,000 psi.
   5. AOA covers to meet or exceed FAA loading standards.
   6. All MH covers shall include the following (see attached figure 1):
      a. "HOUSTON AIRPORT SYSTEM" in the upper half of a half circle in 2.5-inch lettering. See attached figure 1.
      b. "TELECOM" in the center of the circle with lettering four inches high x 18 inches long and solid rectangular lines (0.5 inches wide and 22 inches long) above and below. See attached figure 2.
      c. Submit proof for approval prior to customizing covers.
      d. Obtain permanent MH number from HAS IT. Field punch MH number at time of installation.
      e. Submit cross reference table with construction MH number and permanent MH number.
      f. All cover and hinge hardware shall be stainless steel.
      g. All covers shall have a camlock and MPIC multi-tool pick bar.

h. All covers shall a safety bar and a stainless steel mechanical spring strut for lift assist.

F. Hand holes (HH): Will be 48" x 48" x 48" and constructed of 2 inch thick concrete, covered with a 3/8 inch steel plate containing an approved locking device with a 35 pound lift to open and close. An 18-inch concrete apron will be placed around the 3/8-inch steel plate cover at grade level. All HH covers shall include the following (see attached figure 1):

1. "HOUSTON AIRPORT SYSTEM" in the upper half of a half circle in 2.5-inch lettering. See attached figure 1.
2. "TELECOM" in the center of the circle with lettering four inches high x 18 inches long and solid rectangular lines (0.5 inches wide and 22 inches long) above and below. See attached Figure 2.
3. Submit proof for approval prior to customizing covers.
4. Cover and service lettering shall be abrasion, corrosion, and chemical resistant
5. Obtain permanent HH number from HAS IT. Field punch HH number at time of installation.
6. Submit cross reference table with construction HH number and permanent HH number.
7. All HH internal components such as racking and ground strips shall be field installable and shall meet the requirements of ANSI/TIA/EIA, NEC, and HAS requirements.
8. All cover and hinge hardware shall be stainless steel
9. All covers shall have a camlock and MPIC multi-tool pick bar.
10. All covers shall a safety bar and a stainless steel mechanical spring strut for lift assist.

G. AOA HH will be 48" x 48" x 48" and constructed of 8 inch thick concrete covered with 250 psi, aircraft rated cover plates containing an approved locking device with a 35 pound lift to open and close. All HH covers shall include the following:

1. "HOUSTON AIRPORT SYSTEM" in the upper half of a half circle in 2.5-inch lettering.
2. "TELECOM" in the center of the circle with lettering four inches high x 18 inches long and solid rectangular lines (0.5 inches wide and 22 inches long) above and below. See attached Figure 1
3. Submit proof for approval prior to customizing covers.
4. Cover and service lettering shall be abrasion, corrosion, and chemical resistant
5. Obtain permanent HH number from HAS IT. Field punch HH number at time of installation.
6. Submit cross reference table with construction HH number and permanent HH number.
7. All HH internal components such as racking and ground strips shall be field installable and shall meet the requirements of ANSI/TIA/EIA, NEC, and HAS requirements.
8. All cover and hinge hardware shall be stainless steel.
9. All covers shall have a camlock and MPIC multi-tool pick bar.
10. All covers shall a safety bar and a stainless steel mechanical spring strut for lift assist.

H. Concrete and Reinforcing Steel for Encasement: Furnish products following Section 01610 and Division 3 except strengths as follows:
   1. Compressive Strength: 2500 psi at 28 days, class A.
   2. Flexural Strength: 500 psi at 28 days.
   3. Dye concrete encasement "ORANGE" to identify Communication Ductbanks.

I. Flexible Innerduct:
   1. Flexible innerduct is the HAS standard for multi-path applications within conduit.
   2. All backbone fiber shall be installed in flexible innerduct.
   3. All backbone copper cable 1 inch and smaller will be installed in flexible innerduct.
   4. All flexible innerduct shall be installed per manufacture requirements.
   5. Only manufacturer's fitting, transition adapter, terminators, accessories and installation kits shall be used. All flexible innerduct cells will be populated with a measured pull tape.
   6. All flexible innerduct shall be OSP rated.
   7. Flexible innerduct shall only be used when installed in

conduit MaxCell 4" 3 Cell

Min Conduit ID	Suggested Product	Max # of Packs	Max # of Cables	Maximum Cable Diameter per Cell	Rec. Pull Length*	Max Pull Length*
3"	MaxCell 4" 3 Cell	1	3	1.34"	1500'	2000'
4"	MaxCell 4" 3 Cell	2	6	1.34"	1500'	2500"
5"	MaxCell 4" 3 Cell	3	9	1.34"	1500'	2500'
6"	MaxCell 4" 3 Cell	4	12	1.34"	1500'	2500'

*Use of OFNR cable may result in reduced pulling lengths

MaxCell 3" 3 Cell

Min Conduit ID	Suggested Product	Max # of Packs	Max # of Cables	Maximum Cable Diameter per Cell	Rec. Pull Length*	Max Pull Length*
3"	MaxCell 3" 3 Cell	2	6	1.03"	1200'	2000'
4"	MaxCell 3" 3 Cell	3	9	1.03"	1500'	2500"
5"	MaxCell 3" 3 Cell	4	12	1.03"	1500'	2500'
6"	MaxCell 3" 3 Cell	5	15	1.03"	1500'	2500'

*Use of OFNR cable may result in reduced pulling lengths

MaxCell 2" 3 Cell

Min Conduit ID	Suggested Product	Max # of Packs	Max # of Cables	Maximum Cable Diameter per Cell	Rec. Pull Length*	Max Pull Length*
2"	MaxCell 2" 3 Cell	1	3	.70"	800'	1500'

*Use of OFNR cable may result in reduced pulling lengths

J. All Plastic innerduct must be approved by HAS before installation.

2.3 ACCESSORIES

A. Continuous Tape for Underground Conduit: orange warning ribbon, PVC tape (detectable, i.e., containing metallic tracings), minimum 5 mils thick and 3 inches wide, permanently imprinted with "CAUTION--BURIED COMMUNICATIONS LINE BELOW" in black letters, minimum 1-inch high.

PART 3 EXECUTION

3.1 PREPARATION

A. Verify materials are on site in proper condition and of sufficient quantity.

B. Verify proper excavation depth; verify width route and support of work. (Division 2). Ducts shall be installed so that the tops of all ducts are at least 36 inches below the finished grade. Verify proper location of hand holes and MH (maximum every 600 feet). Communications facilities must be placed in separate MH/HH from electrical facilities.

C. Trenches greater than or equal to 5 feet deep:
   1. Shall be shored to prevent cave-in.
   2. Shall have 2 feet clearance from the dirt pile.

D. Directional boring is a suitable substitute when trenching is impractical or impossible. Bore logs shall be submitted as deliverables along with the GPS/GIS data information to include but not limited to, depth every 10-12 feet, x and y coordinates. Refer spec section 270553 for the GIS data collocation deliverable. A 6 gauge trace wire shall be installed with the conduit. Locating existing underground utilities is crucial when directional boring is planned because of the potential for the drilling unit to encounter high voltages. Although directional boring machines are manufactured with electrical strike sensing capabilities which can warn the operator of any contact with a high voltage source, accidents may still occur.
   1. Operators of directional boring machines require special protection due to the potential for exposure to high voltage. Therefore, operators must always have a ground mat grid underfoot as insulation protection. In addition, operators must wear insulating boots and gloves, along with hard hats and safety glasses.

E. Minimum electrical/communications underground cable separation:
   1. Concrete: 3 inches
   2. Masonry: 4 inches
   3. Well-tamped earth: 12 inches

F. Before encasement, verify ducts are free of debris and properly installed in support and spacer system, are properly fitted together and hold-down hardware is properly installed.

3.2 INSTALLATION

A. Prior to installation, the contractor shall comply with Specification 270553 referencing GIS GPS requirements during the installation of all manholes / handholes and ductbanks.

B. Install all work following drawings, manufacturer's instructions and approved submittal data.

C. Install conduit in excavations following Drawings. If directional boring is utilized, cable or flexible conduits can be attached to the unit and pulled back to the origination point (after the drilling unit reaches its destination).

D. HH will be 48" x 48" x 48" and shall be constructed of two-inch thick concrete covered with 3/8 inch steel plate. The hand hole or MH shall rest on a 4 inch blanket of 2 sack stabilized sand, and 4 inches around the side walls shall be filled with 2 sack stabilized sand. Refer to Division 02321.

E. Each MH/HH that contains a pedestal will have four bollards installed 18 inches diagonally from each corner, with a cross member welded at 30 inches connecting the Four Corners. These barriers will be constructed of 4 inch ridged conduit filled with concrete, driven four feet in the ground and extending 36 inches above the protective cover.

F. Install watertight penetrations through foundation, HH and MH walls. Wherever a hand hole is used to simply pass through, the conduit entrances and exits will be situated at opposite ends of the hand hole instead of 90 degree angles.

G. Assemble duct banks with non-magnetic saddles, spacers and separators. Position separators for 2 inch minimum concrete separation between outer surfaces of adjacent ducts.
   1. Make uniform required bends with a minimum of a 24 inch radius for conduits less than 3 inch diameter, and a 48 inch radius for conduits 3 inches and larger.
   2. Maintain vertical or horizontal separations of 12 inches of well-packed topsoil from any electrical service conduit run parallel to Communications conduits.

H. Install reinforcing. Install concrete encasement fully surrounding reinforcing steel and ducts. Follow Section 03315 using one-inch maximum size course aggregate concrete.
   1. Unless otherwise noted on the drawings, reinforce with No. 4 longitudinal steel bars placed at each corner and along each face at maximum parallel spacing of 12 inches o.c., and No. 3 tie-bars transversely placed at 12 inches o.c. maximum longitudinal. Maintain maximum clearance of 2 inches from bars to edge of forms and ducts.
   2. Sprinkle ORANGE colorants on top of concrete.
      a. ORANGE: For voice and data cable.
   3. Place concrete with minimum 3 inch cover surrounding ducts and reinforcement.
   4. Maintain ducts in proper place during concrete placement.

I. Transition from non-metallic to PVC coated metallic conduit where duct banks enter structures or turn upward for continuation above grade.
   1. With prior HAS/IT APPROVAL. For conduit runs (1" to 4") a special LBD condulet (Crouse-Hinds or approved equal) may be used for exterior wall penetration where a

swept 90 will not work. LBD condulets are designed for communications cable installation to maintain bend radius requirements.

J. Where ducts enter structures such as HH, MH, pull boxes, or buildings, terminate ducts in proper end bells, insulated L-bushings, Meyers hubs or couplings on steel conduits and sealed all ducts with watertight mechanical plugs with a max back Air Pressure 17 PSI, Max Back Pressure 40 ft of Head.

K. Extend below grade conduits to 4 inches above the finished floor inside a building.

L. Tag conduits entering pull boxes with stamped stainless steel tags following cable and conduit schedule.

M. Install continuous, orange warning ribbon, PVC tape (detectable, i.e., containing metallic tracings), 3 inches wide, permanently imprinted with "CAUTION - BURIED COMMUNICATIONS LINE BELOW" in black letters, approximately 12 inches below finished grade following line of duct banks.

N. Expansion Fittings:
   1. Raceways shall be provided with expansion fitting where necessary to compensate for thermal expansion and contraction.
   2. Use expansion-deflection fittings on conduit crossing structural expansion joints and on exposed conduit funs where necessary. Provide bonding jumpers across fittings in metal raceways systems

3.3 BACKFILLING

A. Backfill following Division 02320 after concrete cures 24 hours. After concrete encased ducts have been properly installed, and the concrete has had time to set, the trench shall be backfilled in at least two layers with excavated material, not larger than four inches in diameter and thoroughly tamped and compacted to at least the density of the surrounding undisturbed soil. If necessary to obtain the desired compaction, the backfill material shall be moistened or aerated as required. Trenches shall not be excessively wet and shall not contain pools of water during backfill operations. The trench shall be completely backfilled and compacted level with the adjacent surface. Any excess excavated material shall be removed and disposed of off site at the contractor‟s expense.

B. Type „C‟ Backfill Cement Stabilized Sand

Two (2) sak stabilized sand is authorized only with HAS IT Infrastructures prior approval. Compact 2 sack stabilized sand in 6” to 8” lifts to a 95% of maximum density as determined in accordance with ASTM D558, ASTM D698 and ASTM D1633, unless otherwise specified in spec section 02321.
Perform and complete compaction of 2 sack stabilize cement mixture within 4 hours from the load delivery receipt.

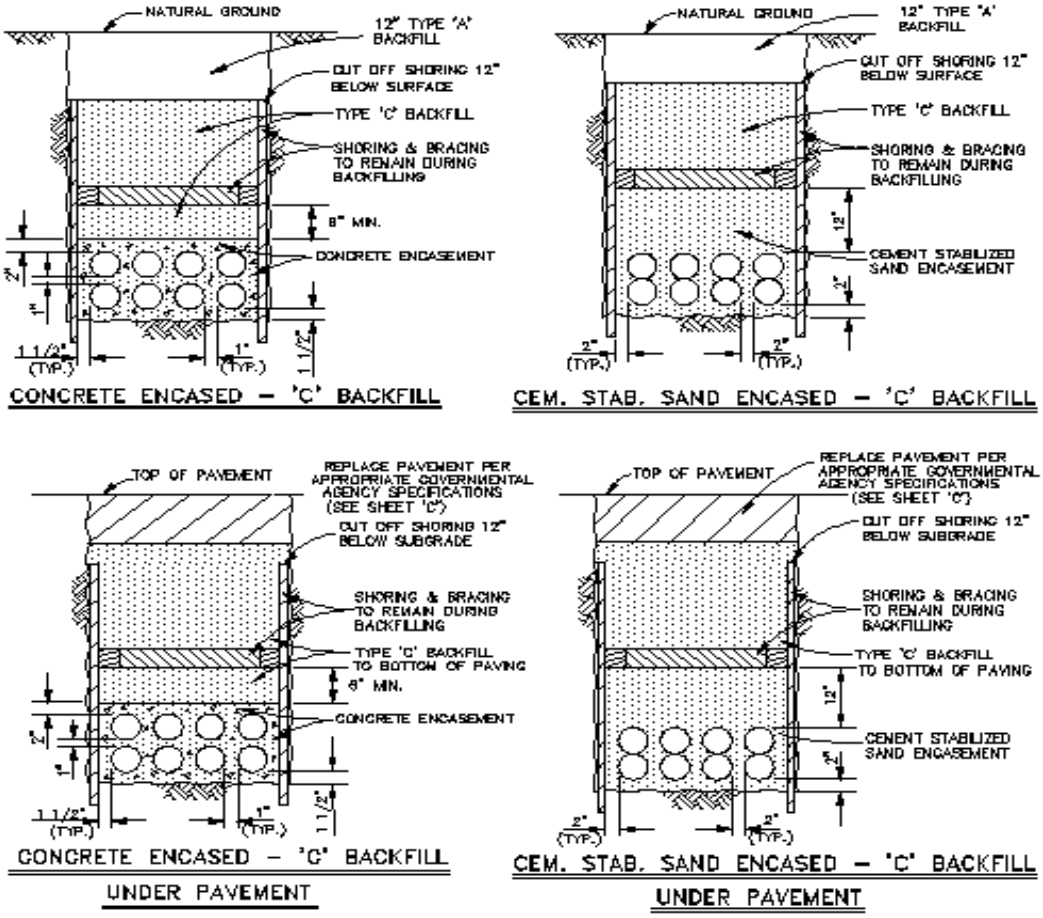

C. If trench is in a grassy area: sod and pin to match the original condition.

3.4 MAINTENANCE HOLES / HANDHOLES

A. Installation shall be in accordance with the manufacturer's requirements. Top of MH/HH cover shall be set ¼ inch above finished pavement or one inch above finished grade.

B. MH/HH shall be bedded on four inches of 2 sack stabilized sand with ¾ inch gradation.

C. Have ducts stubbed into the MH/HH, which shall terminate in end bells cast in concrete flush with the inside walls. Ducts shall enter the MH/HH at the lowest knockout window available.

D. MH/HH shall be fitted on each wall with cable racks and struts. Each rack will be provided with a minimum of four rack type arms. Rack arms will be made of non-flammable polymer.

E. MH shall be provided with a pulling eye on each end and a drainage sump in the bottom.

F. HH shall be provided with a pulling eye on each end and a drainage sump in the bottom.

G. MH/HH will be provided with a ¾ inch by 10-foot copper clad ground rod in each MH. See Section 270526 for ground rod specification. Do not install the ground rod through the drain sump. Install through a prepared opening and grout fill after installation.

H. All vacant ducts, will be sealed with an HAS and Industry approved water-tight and gas-tight mechanical plugs with max back Air Pressure 17 PSI, Max Back Pressure 40 ft of Head.

I. All flexible innerducts and plastic innerducts will be sealed with an HAS and Industry approved water-tight and gas-tight plugs.

J. All occupied ducts will be sealed with Triplex duct plugs, Quadplex duct plugs or HAS and Industry approved water-tight and gas-tight plugs.

K. Where more than one innerduct is routed in a conduit, each innerduct shall consist of a different color (ex. Orange, Blue, Black and White). HAS-IT approval required before installation.

L. When populating duct bank with plastic innerduct the following apply: HAS-IT approval required before installation.
   1. Innerduct to be OSP rated
   2. 4” duct to be populated with no less than 3-1.25 inch innerducts
   3. 4” duct to be populated with no less than 4-1 inch innerducts

M. All fiber cables must be placed in flexible innerduct and comply with 271300 guidelines.

N. All copper cables 100 pairs or less will be placed in flexible innerduct.

O. Pull a 12 inch long mandrel (1/4 inch smaller than duct diameter) through ducts. Pull a rag swab or sponge through to remove debris, until it shows clean.

P. Provide a conduit measuring tape, with a minimum test rating of 1250 pounds of pulling tension in all underground conduits, flexible innerducts and plastic innerduct when applicable. Label each end of the duct bank in every MH to ensure continuity per specification 270553.

3.5 IDENTIFIERS, LABELS AND LABELING SYSTEM

A. All Identification and Labeling shall follow Specification: 270553–Identification and Labeling of Communication Infrastructure. **Any deviation from the specification must be approved by HAS IT prior to installation.**

END OF SECTION

Figure 1

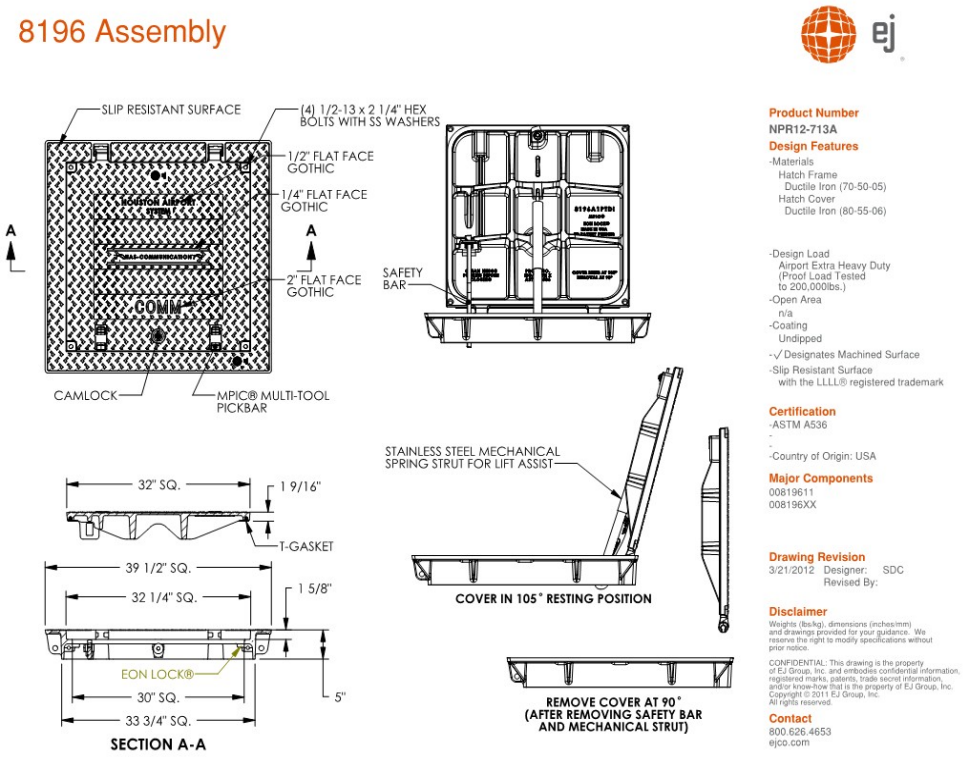
8196 Assembly
ej
SLIP RESISTANT SURFACE
(4) 1/2-13 x 2 1/4" HEX BOLTS WITH SS WASHERS
1/2" FLAT FACE GOTHIC
1/4" FLAT FACE GOTHIC
2" FLAT FACE GOTHIC
A
A
COMM
CAMLOCK
MPIC® MULTI-TOOL PICKBAR
SAFETY BAR
STAINLESS STEEL MECHANICAL SPRING STRUT FOR LIFT ASSIST
COVER IN 105° RESTING POSITION
REMOVE COVER AT 90° (AFTER REMOVING SAFETY BAR AND MECHANICAL STRUT)
32" SQ.
1 9/16"
T-GASKET
39 1/2" SQ.
32 1/4" SQ.
1 5/8"
EON LOCK®
30" SQ.
33 3/4" SQ.
5"
SECTION A-A
Product Number
NPR12-713A
Design Features
-Materials
Hatch Frame
Ductile Iron (70-50-05)
Hatch Cover
Ductile Iron (80-55-06)
-Design Load
Airport Extra Heavy Duty (Proof Load Tested to 200,000lbs.)
-Open Area
n/a
-Coating
Undipped
-√ Designates Machined Surface
-Slip Resistant Surface with the LLLL® registered trademark
Certification
-ASTM A536
-Country of Origin: USA
Major Components
00819611
008196XX
Drawing Revision
3/21/2012 Designer: SDC
Revised By:
Disclaimer
Weights (lbs/kg), dimensions (inches/mm) and drawings provided for your guidance. We reserve the right to modify specifications without prior notice.
CONFIDENTIAL: This drawing is the property of EJ Group, Inc. and embodies confidential information, registered marks, patents, trade secret information, and/or know-how that is the property of EJ Group, Inc.
Copyright © 2011 EJ Group, Inc.
All rights reserved.
Contact
800.626.4653
ejco.com

Figure 2

SPECIFICATION 271100
COMMUNICATIONS CABINETS AND EQUIPMENT ROOMS

PART 1 – GENERAL

1.1 SUMMARY

A. This section includes the specifications for constructing and building out of Telecommunications Equipment Rooms (MDF/IDFs) to be used for supporting telecommunications and other special systems.

B. Upon completion of the installation, a third party field verification firm will independently verify the installation for compliance to the TIA/EIA-568-B standard and/or additional requirements as stated in this specification. Contractor shall be responsible for fully rectifying all indicated faults by the third party field verification firm in accordance with the approved project schedule

1.2 RELATED SECTIONS:

A. Specification 270553: Identification and Labeling of Communication Infrastructure
B. Specification 271300: Backbone/Riser Media Infrastructure
C. Specification 271500: Horizontal Media Infrastructure
D. Specification 272100 Data Communication Network Equipment
E. Specification 272200 PC, Laptop, and Server Equipment
F. Specification 270528: Interior Communications Pathways
G. Specification 270543: External Communication Pathways
H. Specification 270526: Telecommunications Grounding and Bonding

1.3 REFERENCES

A. The publications listed below form a part of this specification to the extent referenced. The publications are referred to in the text by basic designation only.

B. Specific reference in specifications to codes, rules, regulations, standards, manufacturer's instructions, or requirements of regulatory agencies shall mean the latest printed edition of each in effect at the date of contract unless the document is shown dated.

C. Conflicts:

1. Between referenced requirements: Comply with the one establishing the more stringent requirements.
2. Between referenced requirements and contract documents: Comply with the one establishing the more stringent requirements.

D. Telecommunications Industry Association /Electronic Industries Association (TIA/EIA) 568B-Commercial Building Telecommunications Wiring Standards.

E. TIA/EIA-569A-Commercial Building Standard for Telecommunications Pathways and Spaces.

F. ANSI/TIA/EIA 607-Commercial Building Grounding and Bonding Requirements.

G. Underwriters Laboratories (UL) Cable Certification and Follow Up Program.

H. National Electrical Manufacturers Association (NEMA).

I. National Electric Code (NEC).

J. UL Testing Bulletin.

K. Houston Airport System Standards and Specifications

1.4 DEFINITIONS AND ABBREVIATIONS

A. Asynchronous Transfer Mode - ATM

B. American Wire Gauge – AWG

C. Computer Aided Drafting - CAD

D. Polyvinyl Chloride – PVC

E. Megabits per second - Mbps

F. Main Distribution Frame – MDF

G. Intermediate Distribution Frame - IDF

1.5 SUBMITTALS

A. Contractor shall submit the proposed layout for each communications room in the airport. This should be in accordance with the drawings in for a "typical" room layout and is required for every room.

B. The contractor will need to submit proposed layout and as-build drawings that depict the complete layout of each communications room prior to implementation. Drawings must be entered into the ECN process

C. Shop Drawings and Systems cutover schedules for all services to be submitted and approved before implementation is started. Shop Drawings to be submitted in accordance with Specification 01340.

D. Record Drawings: Furnish CAD drawings of all installed equipment within each communications room. All CAD work performed as part of the design effort shall be in compliance with the current City of Houston CAD standards as well as the U.S. National CAD Standard. This should apply to all CAD layering, symbols, etc.

1.6 QUALITY ASSURANCE

A. Furnish, erect, install, connect, clean, adjust, test and condition all manufactured articles, materials, and equipment, and place in service in accordance with the manufacturer's directions and recommendations except as otherwise indicated in the contract documents.

B. See Appendix A – MDF/IDF Readiness Checklist

C. See Appendix B – Typical Inspector Checklist

PART 2 – PRODUCTS

2.1 MANUFACTURERS

A. The manufacturers and specific part numbers listed in this section are provided as an aid in the RFP process and are not meant to preclude other manufacturers that may be qualified to provide communications components. Other manufacturers with comparable qualifications may be proposed but shall be subject to review as an approved equivalent.

2.2 RELAY RACKS

A. Manufacturer: APC or submitted and owner-approved equivalent.

B. Seven-foot double-sided, high cable density style relay rack shall comply with following specifications:
   1. 19" rack width
   2. Double-sided universal mounting spacing
   3. #12-24 panel mounting holes
   4. Conformance to EIA-310-D
   5. Twin 2" x 2" top angles
   6. Self squaring with tapped assembly holes
   7. Material: 6061-T6 aluminum alloy
   8. Provide Horizontal and Vertical wire management
   9. Finish: Black Finish
   10. Part number: NetShelter AR201
   11. Isolation kit for mounting
   12. Power Strip – APC or owner approved equivalent QTY (2) The switched RACK Metered PDUs NEMA 5-20P input and Nema 5-20R AP7930, Rack PDU, Switched, Zero U, 20A, 120V, (24)5-20, input L5-20P AP7901, Rack PDU, Switched, 1U, 20A, 120V, (8)5-20, input L5-20P
   13. All Cabinets/Rack are to have a 24 port standard RJ45 patch panel installed with 12 ports cabled back to the Horizontal cable cabinet on a iPatch panel

2.3 FREESTANDING VERTICAL EQUIPMENT CABINETS

A. Manufacturer: APC Rack Systems or submitted and owner-approved equivalent.

B. General
   1. The work covered here consists of the furnishing of all necessary labor, supervision, materials, accessories, parts, equipment, and services to provide and install a complete freestanding equipment cabinet.
   2. The standard freestanding equipment cabinets are defined to include, but not limited to, cabinet frames, cabinet front and rear doors, top and side panels.
   3. All internal cabinetry hardware shall be 19-inch rack mountable.
   4. Provide and install freestanding vertical cabinets, with hinge placement as indicated in the Drawings.
   5. Provide vertical and horizontal wire management for all cabinets
   6. All cabinets once installed must have padlock eyes installed. Part# 60R.
   7. All Cabinets/Rack are to have a 24 port standard RJ45 patch panel installed with 12 ports cabled back to the Horizontal cable cabinet on a iPatch panel

C. Standard Network cabinet:
   1. Cabinets shall be fully assembled by the manufacturer with the components listed below. Individual component part numbers provided for information only.
      a. APC AR3150 42U/750mm Wide Cabinet screw/round hole
      b. AR8442 QTY (6) Kits Vertical Cable Organizer
      c. AR8425A QTY (1)Horizontal Cable Organizer 1RU
      d. AR8426A QTY (1) Horizontal Cable Organizer 2RU
      e. AR8428 QTY (1) Horizontal Cable Organizer 2RU w/pass through
      f. AR7706 QTY (1) Rail Brush Strips
      g. All Network cabinets to have 24 patch panel installed. See Specification 271500
      h. PDU Power Strips:
         1) Core Switch Cabinet QTY (2) The switched RACK Metered PDUs L6-20P input with at least two L6-20R for connecting Cisco 65xx switches rest Nema 5-20R/outlets AP7940, Rack PDU, Switched, Zero U, 20A, 200/208V, (21)C13 & (3)C19, input L6-20P AP7863, Rack PDU, Metered, Zero U, 5.7kW,120&208V,(21)5-20&(6)L6-20 (Metered Not Switched), input L21-20P
         2) All other Cabinets QTY (2) The switched RACK Metered PDUs NEMA 5-20P input and Nema 5-20R output AP7930, Rack PDU, Switched, Zero U, 20A, 120V, (24)5-20, input L5-20P AP7901, Rack PDU, Switched, 1U, 20A, 120V, (8)5-20, input L5-20P

D. Standard Server Cabinet:
   1. Cabinets shall be fully assembled by the manufacturer with the components listed below. Individual component part numbers provided for information only.
      a. AR3150 QTY (1) 42U/750mm Wide cabinet square hole.
      b. AP7541 QTY (2) Zero U Basic PDU not managed Input 10' cord L6-30P 200/208V Output (20) C13 & (4) C19.
      c. AR8136 or AR8136BLK200 QTY (10/200) 1U toolless blanking panels
      d. AR8442 Kits QTY (6) Vertical Cable Organizers Zero U

e. AR7202 QTY (1) Roof Match Kit Optional (to match height of taller US standard cabinets)
f. All Server cabinets to have 24 patch panel installed. See Specification 271500

2. Grounding Bus Bar:
   a. Provide Rack-Mounted Ground Bar. See Specification 270526

E. Standard Wall Mount Cabinet:
   a. AR100HD QTY (1)WX Wall mount 13U screw/round hole or approve
   b. PDU Power strip:
   c. Provided Vertical wire management
2. Grounding Bus Bar:
   a. Provide Rack-Mounted Ground Bar. See Specification 270526

F. Co-location Cabinet – three compartment: DAMAC part number CC-RB-3-842430-XX. Shall comply with the following specifications.
1. Dimensions: 84"H x 24"W x 30"D
2. Each frame shall include six 19” EIA mounting rails untapped.
3. Cabinet shall have three compartments with two divider shelves.
4. Frame construction shall be of fully welded 16 gauge tubular steel.
5. Frame shall have four adjustable levelers.
6. Frame bottom shall have four weld-in floor-mount gussets.
7. Frame shall be capable of supporting 1000 pounds of equipment.
8. Cable routing to top of cabinet shall be in a 2” x 2” rear duct and shall be secure in each cabinet.
9. Cabinet shall have a ventilated base frame.
10. Front doors: Custom 1/3 door, Plexi-glass, right hinge placement
11. Rear doors: Custom 1/3 door, louvered, right hinge placement
12. Side panels shall be fully perforated.
13. Mounting hardware shall be included.
14. Each compartment shall be supplied with Master lock combination change-list (five combinations).
15. Provide and install one power strip in each compartment. Mounting rails shall have rack unit labels reference 270553.
16. Isolation kit for floor isolation
17. Provide Rack-Mounted Ground Bar. See Specification 270526

G. Co-location Cabinet – two compartment: DAMAC part number CC-RB-3-843030-XX. Shall comply with the following specifications.
1. Dimensions: 84"H x 30"W x 30"D
2. Each frame shall include six 19” EIA mounting rails untapped.
3. Cabinet shall have three compartments with two divider shelves.
4. Frame construction shall be of fully welded 16 gauge tubular steel.
5. Frame shall have four adjustable levelers.
6. Frame bottom shall have four weld-in floor-mount gussets.
7. Frame shall be capable of supporting 1000 pounds of equipment.

8. Cable routing to top of cabinet shall be in a 2” x 2” rear duct and shall be secure in each cabinet.
9. Cabinet shall have a ventilated base frame.
10. Front doors: Custom 1/3 door, Plexi-glass, right hinge placement
11. Rear doors: Custom 1/3 door, louvered, right hinge placement
12. Side panels shall be fully perforated.
13. Mounting hardware shall be included.
14. Each compartment shall be supplied with Master lock combination change-list (five combinations).
15. Provide and install one power strip in each compartment.
16. Mounting rails shall have rack unit labels reference 270553.
17. Provide Rack-Mounted Ground Bar. See Specification 270526

2.4 WALL BACKBOARDS

A. All walls in telecommunication rooms (MDF/IDF’s, Tenant etc.) will be covered with ¾ inch plywood installed in 4 x 8 sheets.

B. Plywood shall be A/C grade or better void-free with A grade side facing out.

C. Plywood shall be and either fire-rated or treated on all sides with at least 2 coats of fire-resistant light-colored paint. Fire-retardant plywood is also generally acceptable.

D. Plywood to be installed 6 inches above finished floor or raised deck.

2.5 IDENTIFIERS, LABELS AND LABELING SYSTEM

A. All Identification and Labeling shall follow Specification: 270553–Identification and Labeling of Communication Infrastructure. **Any deviation from the specification must be approved by HAS IT prior to installation.**

2.6 Energy Efficient Lighting for IDFs

A. General
1. The work covered here consists of the furnishing of all necessary labor, supervision, materials, accessories, parts, equipment, and services to provide and install a complete lighting system.
2. Lights shall be LED and controlled by an occupancy sensor so lights are turned off when the room is not occupied.

2.7 Energy Efficient Lighting for MDFs Computer rooms

A. Manufacturer: Redwood Systems or submitted and owner-approved equivalent.

B. General

1. The work covered here consists of the furnishing of all necessary labor, supervision, materials, accessories, parts, equipment, and services to provide and install a complete lighting system.
2. System must be cabled to the HAS network so it can be remotely managed.
3. System must be configured with installed occupancy sensors, to facilitate the lights being turned off when the room is not occupied.

C. Lighting System

1. RE64-2G-120-250-ROS – Redwood Engine – 2U rack or wall mountable LED power and control core component with 64 20W channels. Unit is capable of 1280W output per engine.

2. RPC-RJ45-1G – 84" stranded core cable that connects a single bank on the Redwood engine and extends a cluster of 8 cables to a standard patch panel with RJ45s.

3. POWERCORD-TBD-120-250 - Power cord for Redwood Engine.

4. RG-2G-TBD2CHAN (MAXLITE 2X2) – Redwood LED Gateways work with Redwood certified fixtures to turn fixtures on. Off or dim them. They receive low-voltage power from and communicate with the Redwood Engine via low-voltage or category cable. The Gateway stores fixture-specific information that assists in installation and commissioning and measures current and voltage for a fixture for accurate power metering. The Gateway connects with and is used in conjunction with a Redwood Sensor that contains a set of environmental data collectors such as light level, temperature and occupancy and sends that data back to the Redwood Engine.

5. RS-2G – The Redwood Sensor collects data on light levels, occupancy and temperature. It connects ta, and communicates with the Redwood Gateway via pre-terminated RJ45 cabling to deliver data to the Redwood Engine.

6. RD-1G-W – Redwood Dimmer allowing manual override control of lighting levels for associated locations. Requires 1 channel as Redwood Engine for power and control, single gang cut-in ring or surface gang box. Removable front plate. Available in white.

7. LOT REDWOOD MATERIALS

8. RSC-1G-FSUC-51 – Factory commissioning for (5) five or less includes (1) one onsite visit by a Redwood Systems Certified Professional Commissioning agent company representative during normal business hours. Visit will include diagnosis and guidance on correction for installation failures (<5% of total installation). Visit will also include configuration of location groups and hierarchies at the commissioning representatives' discretion, placement of fixtures within configured locations, assignment of policies for all locations at the commissioning representatives' discretion, calibration of fixtures for daylight harvesting, operational testing of system configuration including functional test, and site staff training. Requires all Engines, Adapters, and fixtures to be installed and

terminated prior to arrival with line voltage circuitry and power connection to Engines completed by others.

9. Redwood 1 Year Support – (1) One year support for all Redwood componets.

10. Maxlite – MLCP-22-D-40-41 2X2 (Redwood Enabled) – Lighting fixture.

11. All UTP cabling must follow section 271500 and all other HAS standards.

PART 3 – EXAMINATION

3.1 VERIFY FOR MINIMUM CRITERIA

A. Verify the following:

1. Minimum size of MDF is 1000 sqft.

2. Minimum size for IDF is 250 sqft.

3. HAS does not share MDF/IDF space with any other tenant and must be separated by a physical barrier be it a fence or wall. All tenants communication systems cabling and equipment shall be installed in the HAS controlled tenant space, as defined in the third item in this section. This shall apply to all tenants that do not have a dedicated MDF or IDF space for their individual telecommunications systems.

4. Conduit, raceways, and boxes are properly installed in accordance with BISCI recommended practices, ANSI/TIA/EIA 569B standards, and the City of Houston Intercontinental Airport Premises Distribution System Design Standards.
5. Conduit is minimum 1 -inch diameter.

6. Main grounding system is properly installed and tested.

7. The MDF is equipped with a smoke detector connected to the building alarm fire panel.

8. Portable fire extinguishers are provided and maintained within 75 feet travel distance from any part of the occupied space within the MDF per local code requirements. The size of the extinguisher shall be a minimum rating of 2-A:10-B:C

9. Ceiling protrusions have been placed to assure a minimum clear height of 8 feet 6 inches to provide space over the equipment frames for cables and suspended racks.

10. The doors are a minimum of 3 feet wide by 6 feet, 7 inches tall. If it is anticipated that large equipment will be delivered to the MDF, a double door 6 feet wide by 7 feet, 5 inches tall is recommended. The doors shall be keyed separately from other facility keys. Preferred method for keying communication room is badge access, limited to only IT personnel and related vendors. Doors shall open outward and be lockable. Access shall allow for future equipment changes. Door shall be fire rated for a minimum of one hour, or more as required by local code requirements.

11. Signage is consistent with Houston Airport System

12. The floor is sealed concrete or tile to minimize dust and static electricity. Carpet is strictly prohibited.

13. Floor loading capacity in the MDF is designed for a minimum distributed load rating of 100 lbf/ft² and a minimum concentrated load rating of at least 2000 lbf.

14. All HVAC systems that provide environmental conditioning (24 hours per day, 365 days per year) and UPS shall be connected to a motor generator for those cases of extend power outages.

15. The air handling system for MDF/IDF equipment rooms is designed to provide positive air flow and cooling even during times when the main building systems are shut down. This may require separate air handlers and/or small stand-alone cooling systems that are thermostatically controlled in this space.

16. Heating, ventilation, and air conditioning sensors and control equipment are located in the MDF/IDF.

17. The room temperature is between 64°F and 75°F, with a relative humidity between 30% and 55%.

18. Designer to provide heat load analysis for all equipment cabinets..

19. The MDF/IDF is protected from contaminates and pollutants that could affect operation and material integrity of the installed equipment. When contaminates are present in concentrations greater than indicated in ANSI/TIA/EIA 569-A, Table 8.2-2, vapor barriers, positive room pressure or absolute filters shall be provided.

20. Positive air pressure differential is maintained with respect to surrounding areas.

21. Lighting to provide a minimum equivalent of 50 foot-candles when measured three feet above finished floor. The light fixtures shall be mounted a minimum of 8 feet, 6 inches above the finished floor. The light switches are located near the entrance of the MDF/IDF. Power for the lighting is from the same circuits as power for thetelecommunications equipment. Emergency lighting has properly been placed that an absence of light will not hamper emergency exit. Lights must be energy efficient LED lights control by approved room lighting system utilizing UTP cabling.

22. The MDF/IDF cabinets are equipped with a minimum of two dedicated electrical circuits appropriately sized for equipment to be installed. Separate duplex 120V AC convenience outlets (for tools, test sets, etc.) shall also be installed at 18 inches above the finished floor at 6-foot intervals around perimeter walls. The outlets shall be on non-switched circuits and they shall be identified and labeled.

23. The MDF/IDF is provided with an electrical ground on a 4-inch or larger busbar as defined by NEC Article 250-71(b). The busbar shall be mounted 6 feet, 6 inches above the finished floor if ladder racking is included in the design. If ladder racking is not part of the design, the busbar shall be located near, but not behind, the riser sleeves between floors. This grounding bar is connected to a main building ground electrode, reference

ANSI/EIA/TIA-607. (Refer to Specification 270526)

24. Connection between the MDF and IDF will be connected with both unshielded twisted pair Category 6 cable, when distance is less than 90 meters and fiber optics cable if the distance is beyond 90 meters. Fiber optics cable should include single-mode and multi-mode. The type of cable, actual count and termination of the fiber will be determined at the planning stage, taking into consideration the amount of network traffic between closets, the distance between the communications rooms and the difficulty of running other cables at future dates.

25. The MDF/IDF is equipped with a single Room wide Eaton Uninterruptible Power Supply that supports all active electronics for a minimum of 30 minutes. Eaton UPS will be connected to an emergency power such as motor generators for those cases of extend power outages. Designer to size for 50% growth.

26. All walls of MDF/IDF are lined with Trade Size 3/4-inch AC-grade plywood, 8 feet high. Plywood will be mounted vertically starting 6 inches above finished floor and shall be securely fastened to the wall-framing members. Plywood to be fire treated and painted with two coats fire-retardant paint.

27. Additional equipment such as fire alarm panels and/or building monitoring devices are not be housed in the MDF/IDF. Separate space for these services can be provided as part of the electrical room or in a separate space.

28. These rooms should be on separate fire protection loops, and a “dry” fire protection system such as FM-200 or Inergen for MDF and preaction for IDF’s should be used. However, an acceptable alternative for intermediate special systems rooms is a “dry” pipe sprinkler system, or no fire protection if enclosed by fire rated walls.

29. Access to the MDF/IDF shall be directly from hallways, not through offices, janitorial or mechanical rooms.

30. The MDF/IDF is located as close as possible to the center of the area served and preferably in the core area.

31. The MDF/IDF is located in any place that may not be subject to water or steam infiltration, humidity from nearby water or stream, heat, and any other corrosive atmospheric or environmental conditions.

32. The MDF/IDF is not located near electrical power supply transformers, motors, generators, x-ray equipment, radio transmitters, induction heating devices, and other potential sources of electromagnetic interference.

33. The MDF/IDF does not share space in or be located near or below electrical closets, boiler rooms, washrooms, janitorial closets, and storage rooms.

34. If any of these items are not provided, contact the HAS/IT representative.

3.2 INSTALLATION

A. Install work following drawings, manufacturer’s instructions, and approved submittal data.

B. All installation shall be done in conformance with TIA/EIA 569B and BICSI installation guidelines. Failure to follow the appropriate guidelines will require the Contractor to provide, in a timely fashion, the additional material and labor necessary to properly rectify the situation.

C. The contractor shall adhere to the installation schedule of the general contractor and should attend all construction meetings scheduled by the general contractor.

D. As a general practice for rack mounted equipment, the contractor shall run power cables, control cables, and high-level cables on the left side of an equipment rack as viewed from the rear. The contractor shall run other cables on the right side of an equipment rack as viewed from the rear. For equipment mounted in drawers or on slides, provide the interconnecting cables with a service loop of not less than three feet and ensure that the cable is long enough to allow full extension of drawer or slide.

E. All racks and cabinets shall be floor mountable by design and permanently fixed to the floor with bolt-down kits. Manufacturer's procedures for floor mounting should be followed. Multiple racks and cabinets shall be connected together directly or indirectly via horizontal cable management hardware as indicated by drawings.

F. A minimum of 2 feet shall be left at the end of the row of equipment bays. A minimum of 5 feet between walls and equipment bays will allow space for wall mounted copper cable terminations and the required 36" distance from equipment for work space.

3.4 CONTRACTOR'S FIELD QUALITY CONTROL

A. The contractor shall be responsible for performing field inspections to ensure that all communications are installed in accordance with the contract drawings, specifications, and City of Houston requirements prior to the performance of field inspections by the City.

B. Should there be any discrepancies or a question of intent, refer the matter to the City for a decision before ordering any equipment, materials or before starting any related work.

C. The City shall perform field inspections and note all discrepancies that must be corrected prior to system acceptance.

END OF SECTION

Appendix A

This list below is intended as a minimum checklist. CM should ensure that the contractor's schedule has built in these components and the necessary buffer period – and associated access restrictions to the communications equipment rooms -- for HAS IT and tenant IT to prepare.

1. All communication rooms that will service the area to be opened must be completed. That means a final walkthrough of these areas has been completed. It is not necessary that the entire project achieve substantial completion, but IT cannot install equipment and begin work until the following minimum criteria is met:
    a. Space is built out and clean – free from dust/residues.
    b. Electrical w/UPS as required.
    c. All racks/cabinets installed and mounted. Padlocks eyes have been installed.
    d. Grounding bus bar installed and properly tied to main grounding bus bar in MDF
    e. HVAC functioning properly and is adequately filtering dust. Humidity is controlled.
    f. Door access control is installed (card reader) -or- an approved temporary provision. Simple key access is not permissible.
    g. Lighting is installed and operational.
    h. Cable trays/ladder racks installed and ready to use.
    i. Permanent or temporary signage identifying permanent room number.

2. All cabling necessary to operate the areas to be opened is completed.
    a. Backbone cabling (copper and fiber) from the applicable communication room(s) is installed, tested, labeled, and approved by the inspector and communications design consultant.
    b. Horizontal cabling for all areas to be occupied is installed, tested, labeled, and approved by the inspector and communications design consultant.
    c. Copper cross connects and/or fiber jumpers have been installed per the owner/tenant requirements.
    d. Cable records and redline drawings for installed cables are submitted and approved PRIOR to putting any active circuits on the new cables. Cable records reflect all installed cables * * and* * any cross connects or jumper assignments installed by the contractor.
    e. All iPatch Panels are programmed and operational.
    f. All jumpers and patch cords specified by the contract are transmitted to the owner for use.
    g. NOTE: cable labels and permanent room numbers need to match. CM needs to be sure to get design team, airport, IT, and CM / contractor reps together to review permanent room numbers prior to contractor installing cable labels.

3. Move-in buffer period needs to be minimum 6 week for HAS-IT to install/extend services

within the area to be occupied prior to occupation of the facility or spaces. Additional time may be necessary if Tenant IT organization is involved, or if contractor has other systems that must be configured/tested which require HAS-IT resources (i.e. cabling or data network connections). This is frequently the case for PA System, television, radio, Fire Alarm, pay telephone, EFSO (Electronic Fuel Shutoff), access control & CCTV, etc.

4. Once HAS-IT accepts a communications equipment room and begins to install/configure equipment in preparation for hosting live applications, this room becomes a restricted area with access to be controlled by HAS-IT. Contractors must be substantially complete with systems inside the communications equipment room so that access is generally not required. Minor punch list and scheduled testing with escort can be arranged, but access will be very limited.

5. Other IT-related systems that must be operational, tested, and accepted or approved temporary provisions.

a. PA System
b. MATV and/or CNN TV (where applicable)
c. Fire Alarm
d. MUFIDS
e. Pay Telephones (where applicable)
f. EFSO (where applicable)
g. Access Control & CCTV (note: must be PROGRAMMED, and approved acceptance test walk through by HAS)
h. Crash phone (where applicable)
i. Radio system enhancements (where applicable)
j. Data Network switch installed and configured.

Appendix B

IDF Number:		Date:		
Grounding & Bonding:		YES	NO	COMMENTS
	TGB properly installed			
	Proper grounding conductor installed (6AWG min.)			
	Cable trays properly bonded			
	Equipment Racks, Armored Cables & Cabinets properly bonded			
	Conduit properly bonded			
	Cabling properly bonded			
	Splice Cases properly bonded			
Horizontal Cabling:		YES	NO	COMMENTS
	Routing			
	Cables properly supported			
	Pull tensions properly recorded			
	Sheath damage			
	Bend radius observed			
	Pair twist meets spec			
	Proper termination scheme			
	Cable/jack part number meets spec			
	Plenum vs. PVC			

	Properly dressed in tray			
	Properly dressed in cable management			
	Cables bundled properly			
	Appropriate clearances observed (power)			
	Minimum about of cable exposed at termination			
Backbone Cabling:		**YES**	**NO**	**COMMENTS**
	Fiber strain relief properly applied			
	Routing			
	Cables properly supported			
	Pull tensions properly recorded			
	Sheath damage			
	Bend radius observed			
	Properly dressed in tray			
	Fiber installed in inner duct			
	Properly dressed in termination shelf			
	Any splice cases properly supported			
Room Layout:		**YES**	**NO**	**COMMENTS**
	Room laid out according to project drawings			
	Proper clearances maintained			
	Is the room clean & neat in appearance			
	Liquid carrying pipes within the room			
Pathways:		**YES**	**NO**	**COMMENTS**

	Conduit properly routed & supported			
	Cable Tray properly routed & supported			
	Inner Duct used to route fiber and properly supported			
Labeling:		**YES**	**NO**	**COMMENTS**
	Grounding conductor			
	End-to-End labeling			
	Pair Count on Splice Case			
	Horizontal Cabling			
	Fiber Optic Cabling			
Other:		**YES**	**NO**	**COMMENTS**
	Appropriate fire stop material in place			
	Cabling test results submitted with proper information			
	Climate controlled environment (Temp. & Humidity)			
	Is the room access controlled			
Copper Cabling:				
	Total Pairs (Riser)			
	Pair Counts			
	Termination Type (66, 110, Protectors.)			
	Termination Location			

Fiber Optic Cabling:	
Multimode:	
Total Strands	
Termination Type (LC, SC)	
Termination Location	
Single Mode	
Total Strands	
Termination Type (LC, SC)	
Termination Location	

End of Appendix

SECTION 271300
BACKBONE AND RISER MEDIA INFRASTRUCTURE

PART 1 GENERAL

1.1 SUMMARY

A. Provide a Structured Cabling System (SCS) for the purpose of supporting voice, data and video communications at the Project Management Office at IAH within the Houston Airport System.

B. Related Work:
1. Section 270526: Telecommunication Grounding and Bonding
2. Section 270528: Interior Communication Pathways
3. Section 270543: Exterior Communication Pathways
4. Section 270553: Identification and Labeling of Communication Infrastructure
5. Section 271100: Communication Cabinets and Equipment Rooms
6. Section 271500: Horizontal Media Infrastructure
7. Section 272100: Data Communication Network Equipment
8. Section 272200: PC, Laptop, Servers and Equipment
9. Section 281300: Access Control System
10. Section 232313: Video Surveillance Control and Management System

1.2 SUBMITTALS

A. Qualifications: Demonstrate compliance with requirements of Paragraph 1.05A below.

B. Manufacturers' data, including part numbers, cut sheets and detailed descriptions, for all proposed equipment.

C. Cable inventory data shall be submitted for all fiber, copper, and coaxial cabling and termination equipment. Reference Specification 270553 for the Inside and Outside plant spread sheets. Information shall be provided on a CD.

D. Shop Drawings to be submitted and approved before implementation is started. Shop Drawings to be submitted in accordance with Specification 01340.

E. Record Drawings: Furnish CAD drawings, following format in Section 01340, of completed work including cable numbers. Refer to Specification 270553 for labeling conventions. Contractor's on-site Building Industry Consulting Services International (BICSI) Registered

Communications Distribution Designer (RCDD) supervisor shall review, approve and stamp all shop drawings, coordination drawings and record drawings.

F. Cable Testing Reports.
1. Submit Testing Plan prior to beginning cable testing.

2. Submit certified test reports of Contractor-performed tests in accordance with paragraph 3.04. of this document.
3. Electronic versions of the original raw data files and PDF versions of the test reports shall be submitted together and clearly identified with cable identification, reviewed and stamped by the Contractor's on-site RCDD.
4. Test reports shall be reviewed, approved and stamped by the Contractor's on-site RCDD.

G. Product data for all termination and test equipment to be used by Contractor to perform work.
1. Equipment shall be calibrated with traceability to National Institute of Standards and Technology (NIST) requirements.
2. Contractor shall include copy of calibration and certification that equipment calibration meets NIST standards and has been calibrated at least once in the previous calendar year.
3. Test equipment data shall be reviewed, approved and stamped by the Contractor's on-site RCDD prior to submitting.
4. Refer to 3.04. in this document for test equipment requirements.

H. Submit Technology Implementation Plan in accordance with 1.07 below.

I. Submit Cable Pulling Plan, as follows:
1. Indicate the installed backbone conduit layout in schematic format, including junction boxes and distances between junction boxes.
2. Indicate contents of each conduit.
3. Indicate the cable pulling calculations, conduit fill ratios and actual cable runs and tensions.
4. Cable Pulling Plan shall be reviewed, approved and stamped by the Contractor's on-site RCDD prior to submittal.
5. Installation of cabling shall not commence prior to approval of the pulling plan and calculations by the Architect/Engineer.

J. Submit installation plan indicating:
1. Equipment and personnel
2. Materials and staging area
3. Start and completion dates
4. Locations, including floor, room and building
5. Installation plan shall be reviewed, approved and stamped by the Contractor's on-site RCDD prior to submitting.

K. Cable Splicing Submittals
1. Submit fiber fusion splicing method and procedures.
2. Submit schedules of copper and fiber cables to be spliced.
3. Submit copper splicing method and procedures.
4. Submit certification documents for all splicing personnel.
5. Submit cut sheets, showing accurately scaled components, of fiber and copper splice closures, accessories, clamps, brackets, hangers, splice connectors, splice joint

assemblies and fittings,

6. Submit manufacturer's data on fiber and copper splice closures including, but not limited to types, materials, finishes, and inside and outside dimensions (cross-sectional properties).

1.3 PROJECT CONDITIONS

A. Field Measurements: Verify dimensions in areas of installation by field measurements before fabrication and indicate measurements on Shop Drawings. Coordinate fabrication schedule with construction progress to avoid delaying the Work.

B. Established Dimensions: Where field measurements cannot be made without delaying the Work, establish dimensions and proceed with fabricating units without field measurements. Coordinate supports, adjacent construction, and fixture locations to ensure actual dimensions correspond to established dimensions.

C. Maintain temperature of between 64 degrees Fahrenheit and 75 degrees Fahrenheit and between 30 and 55 percent humidity in areas of active electronic system work.

1.4 REFERENCES

A. The publications listed below form a part of this specification. The publications are referred to in the text by basic designation only.

B. Specific reference in specifications to codes, rules, regulations, standards, manufacturer's instructions, or requirements of regulatory agencies shall mean the latest printed edition of each in effect two weeks prior to the date of the Bidding Documents unless the document is shown dated.

C. Conflicts.
1. Between referenced requirements: Comply with the one establishing the more stringent requirements.
2. Between referenced requirements and contract documents: Comply with the one establishing the more stringent requirements.

D. References.
1. ANSI/TIA/EIA-568-B, Commercial Building Telecommunications Wiring Standards
2. ANSI/TIA/EIA-569-A Commercial Building Standard for Telecommunications Pathways and Spaces
3. ANSI/TIA/EIA-606 Administration Standard for the Telecommunications Infrastructure of Commercial Buildings
4. International Standards Organization/International Electromechanical Commission (ISO/IEC) DIS11801, January 6, 1994
5. Underwriters Laboratories (UL®) Cable Certification and Follow Up Program
6. National Electrical Manufacturers Association (NEMA)
7. American Society for Testing Materials (ASTM)

8. National Electric Code (NEC®) Latest issue
9. National Electrical Safety Code (NESC) Latest issue
10. Institute of Electrical and Electronic Engineers (IEEE)
11. UL Testing Bulletin
12. American National Standards Institute (ANSI) X3T9.5 Requirements for UTP at 100 Mbps
13. SYSTIMAX Structured Cabling Systems, Performance Specifications, Latest Issue
14. SYSTIMAX Structured Cabling Systems, Components Guide, Latest Issue
15. Systimax Generic Specifications: Fiber Optic Outside Plant Cable, Latest Issue
16. BICSI Telecommunications Distribution Methods Manual (TDMM) Latest issue
17. Rural Utilities Service (RUS) Section 1755

E. All splicing methods, procedures and products shall comply with the following:
1. Rural Utilities Service (RUS) Section 1755
2. National Electrical Safety Code (NESC) Latest issue
3. National Electrical Code (NEC) Latest issue
4. Fiber closures: GR-771-Core
5. Copper splice cases: Bellcore Testing Requirement PUB-55003 (Pressure Tight Splice Closure)
6. UL 1863 classified
7. Applicable local codes, statutes, ordinances, regulations, license requirements.

1.5 QUALITY ASSURANCE

A. Submit written proof that the following experience requirements are being met.
1. Contractor Qualifications
   a. The contractor shall be certified by the manufacturer of the products, adhere to the engineering, installation and testing procedures and utilize the authorized manufacturer components and distribution channels in provisioning this Project.
   b. Must be supervised on-site by a BICSI RCDD. Must demonstrate knowledge and compliance with all BICSI, TIA/EIA, UL, and NEC methods, standards and codes.
   c. All members of the installation team shall be certified by the manufacturer as having completed the necessary training to complete their part of the installation.

      Resumes of the entire team shall be provided along with documentation of completed training courses.
   d. The contractor shall provide five references for projects of equivalent scope, type and complexity of work completed within the last five years.
   e. The contractor who is installing the cabling infrastructure shall be certified by CommScope/SYSTIMAX and be a Premier partner CommScope's PartnerPRO Network and hold certain certifications.
   f. The contractor who is installing the cabling infrastructure shall have the following SYSTIMAX iPatch certification:
      SP3321 – SYSTIMAX SCS Design & Engineering or SP3351- SYSTIMAX

Master Class Design & Engineering and I&M Recertification, SP5500 - SYSTIMAX iPATCH Design & Engineering, SP5503 – iPatch Administrator, and the GL5555 SYSTIMAX Certified imVision Support Specialist. Cable splicing personnel shall have a minimum of five years splicing experience and shall have completed a minimum of five major splicing projects.

2. Copper cable splicing personnel/technicians requirements:
   a. All copper splicing personnel/technicians shall have a minimum of 900 pair in one project splicing experience.
   b. All copper splicing personnel/technicians shall have outside plant (OSP) and inside plant splicing experience.
   c. All copper splicing personnel/technicians shall be familiar with and shall have installed Systimax splicing modules.
   d. All copper splicing personnel/technicians shall have installed in-line and butt splicing configurations.
   e. All copper splicing personnel/technicians shall have installed OSP, underground, direct buried, aerial, pedestal, and vault splice closures.
3. Fiber splicing personnel/technicians requirements:
   a. All fiber spicing personnel/technicians shall have a minimum of 144 fibers in one project splicing experience.
   b. All fiber spicing personnel/technicians shall have OSP and inside plant splicing experience.
   c. All fiber spicing personnel/technicians shall be familiar and have installed fusion, rotary and mechanical splicing modules.
   d. All fiber spicing personnel/technicians shall be familiar and have installed mass fusion splice trays.
   e. All fiber spicing personnel/technicians shall be familiar and have installed ribbon fusion and mass fusion splicing.
   f. All fiber spicing personnel/technicians shall have installed in-line and butt splicing configurations.
   g. All fiber spicing personnel/technicians shall have installed OSP, underground, direct buried, aerial, pedestal, and vault splice closures.

4. Console installers shall be certified by console manufacturer and experienced in the installation of systems of similar complexity.
5. Manufacturer's hardware experience: All components shall be produced by manufacturers who have been regularly engaged in the production of telecommunications cabling components of the types to be installed in this project for a period of five years.

B. Materials and equipment: Equipment shall be rated for continuous operation under the ambient environmental temperature, humidity, and vibration conditions encountered at the installed location. The equipment shall meet the following requirements:
   1. Interior controlled environment: 60 to 100 degrees F dry bulb and 20 to 90 percent relative humidity, non-condensing.

2. Interior uncontrolled environment: 0 to 130 degrees F dry bulb and 10 to 95 percent relative humidity, non-condensing.
3. Exterior environments: Minus 30 degrees to 130 degrees F dry bulb, and 10 to 100 percent relative humidity, condensing.
4. Hazardous environment: All system components located in areas where fire or explosion hazards may exist because of flammable gas or vapors, flammable liquids, combustible dust, or ignitable fibers or flyings, shall be rated and installed according to Chapter 5 of the NFPA 70 and as shown.

C. Standard products:
1. Equipment and materials shall be standard products of a manufacturer regularly engaged in the manufacture of telecommunications cabling products and shall be the manufacturer's latest standard design in satisfactory use for at least one year prior to bid opening.
2. Items of the same classification shall be identical. This requirement includes equipment, modules, assemblies, parts, and components.

1.6 CONTRACTOR'S DUTIES

A. Contractor's RCDD shall provide all calculations and analysis to support design and engineering decisions as specified in the Submittals section.

B. Provide and pay for all labor, supervision, tools, equipment, test equipment, tests and services/programming to provide and install a complete inside and outside plant fiber and copper infrastructure system. Pay all required sales, gross receipts, and other taxes.

C. Secure and pay for plan check fees, permits, fees, and licenses necessary for the execution of Work as applicable for the project.

D. Give required notices.

E. Comply with all codes, ordinances, regulations, and other legal requirements of public authorities that bear on performance of Work.

1.7 PROCUREMENT

A. Procure equipment specified in this document as dictated by the timeline in Appendix A "Technology Implementation Schedule" in order to ensure that the technology is acquired in a timely fashion, but not outdated by the installation date.

B. Submit a copy of Appendix A "Technology Implementation Schedule" as a part of the equipment submittals required elsewhere in this document. Complete the columns headed "Quantity", "Purchasing Lead Time", "Start Date or Dependent", and "Installation Duration".

C. The "Procurement Lead Time" shall be expressed in days or weeks, and shall include time required for the contractor's personnel to order and receive the material. Substantiation may be required.

D. "Start Date or Dependent" and "Installation Duration" should be an accurate estimate based upon known facts in the project. Substantiation may be required.

E. The Contractor shall not purchase any materials requiring submittals until the owner approves the product submittal and the Technology Implementation Schedule for that material.

F. The Contractor shall not purchase any materials requiring submittals until the date established by the owner as the Purchasing Authorized Date. The Purchasing Authorized Date will be reflected in the "Purch Auth" column of Appendix A as a part of the Submittal Review process.

1.8 MAINTENANCE AND SUPPORT

A. System Assurance: The System Assurance shall cover the failure of the wiring system to support the application which it was designed to support, as well as additional application(s) introduced in the future by recognized standards or user forums that use the ANSI/TIA/EIA 568B or ISO/IEC IS 11801 component and link/channel specifications for cabling, for a twenty-year period.

B. System Certification: Upon successful completion of the installation and subsequent inspection, the customer shall be provided with a numbered certificate, from the manufacturing company, registering the installation.

C. Support Availability: The Contractor shall commit to make available local support for the product and system during the Warranty period.

1.9 EXTENDED WARRANTY

A. The Extended Product Warranty shall meet all manufactures specification to ensure against product defects, that all approved cabling components exceed the specifications of ANSI/TIA/EIA 568B and ISO/IEC IS 11801, exceed the attenuation and NEXT requirements of ANSI/TIA/EIA 568B and ISO/IEC IS 11801 for cabling links/channels, that the installation will exceed the loss and bandwidth requirements of ANSI/TIA/EIA 568B and ISO/IEC IS 11801 for fiber links/channels, for a twenty year period. The warranty shall apply to all passive SCS components.

B. The Extended Product Warranty and the System Assurance shall cover the replacement or repair of defective products and labor for the replacement or repair of such defective products.

1.10 DELIVERY AND STORAGE

A. Equipment shall be delivered in original packages with labels intact and identification clearly marked.

B. Equipment shall not be damaged in any way and shall comply with manufacturer's operating specifications.

C. Equipment and components shall be protected from the weather, humidity, temperature variations, dirt, dust, or other contaminants. Equipment damaged prior to system acceptance shall be replaced at no cost to the City.

PART 2 PRODUCTS

2.1 MANUFACTURERS

A. Subject to compliance with requirements, manufacturers offering products that may be incorporated into the Work include, but are not limited to SYSTIMAX SCS and other manufacturers as referenced in this document. However, substitutions for Systimax products are not permitted.

2.2 GENERAL

A. Provide all cabling, terminating hardware, adapters, and cross-connecting hardware necessary to interconnect all system equipment including equipment located in the Main Distribution Facility (MDF) and the Intermediate Distribution Facilities (IDFs).

B. All Fiber terminations/connectors shall be pigtail fusion splice.

2.3 FIBER OPTIC CABLE GENERAL REQUIREMENTS

A. SYSTIMAX SCS Teraspeed Singlemode or LazrSPEED 550 50 Multimode as required.

B. Fiber optic cable shall be certified to meet all parts of EIA-455 and comply with the NEC.
   1. Cable installed in plenums or air-handling spaces shall meet UL 910 and shall be marked OFNP (optical fiber non-conductive plenum) in accordance with the NEC.
   2. Riser cable shall meet UL 1666 and be marked OFNR (optical fiber non-conductive riser) in accordance with the NEC.

C. All fiber optic cable shall utilize the appropriate sheath for the particular application. This shall be in accordance with ANSI/EIA/TIA 568-B standards. Any cable placed in space used as an air return or in any way connected with air handling plenums or building ventilation shall be low-smoke, fire retarding cable, and shall comply with the National Electrical Code Articles 725, 760, and 800. No cabling shall be placed in plenums without written approval from HAS.

D. Outside Plant Fiber Cables.
   1. Stranded loose tube dielectric or armored dry core fiber optic cable shall be utilized for underground conduit, direct buried or aerial applications.

E. Building Fiber Cables.

1. Non-plenum, riser rated cable consisting of multiple fibers, shall have a black, Polyvinyl Chloride (PVC) outer jacket. The cable shall be UL listed and meet the NEC requirements for OFNR.
2. Plenum Fiber rated cable consisting of multiple fibers shall have a Plenum PVC outer jacket. Each group of fibers shall have a color-coded Low Smoke PVC buffer. Teraspeed shall be yellow and LazrSPEED 550 shall be Aqua. The cable and each subunit shall be UL listed and meet the NEC requirements for OFNP.

F. Preparation for delivery: The fiber optic cable shall be shipped on reels in lengths as specified with a minimum overage of 10 percent.
1. The cable shall be wound on the reel so that unwinding can be done without kinking the cable.
2. Two meters of cable at both ends of the cable shall be accessible for testing.
3. Marking: Each reel shall have a permanent label attached showing length, cable identification number, cable size, cable type, attenuation, bandwidth, and date of manufacture. Labels shall be water resistant and the writing on the labels shall be indelible.
4. Storage: The cable shall have a minimum storage temperature range of minus 40 C to plus 70 C.

G. Unless otherwise specified, all fiber cables not installed in conduit shall be armored cable.

2.4 MULTIMODE FIBER OPTIC CABLE SPECIFICATIONS

A. Manufacturer: SYSTIMAX SCS – LazrSPEED 550 Multimode 50 Cable.

1. Outdoor Cables: Systimax Multimode, Stranded Loose Tube Dielectric or Armored Dry core LazrSPEED 550 Outdoor Cable designed for underground conduit, direct buried or aerial applications consisting of multiple multimode 50/125 fibers.
2. Building Cables: Multimode/non-plenum, Systimax LazrSPEED 550 Backbone/Riser Rated Cable, consisting of multiple multimode 50/125 fibers with a PVC outer jacket.
3. Building Cables: Multimode/plenum, Systimax LazrSPEED 550 Backbone/plenum Rated Cable, consisting of multiple multimode 50/125 fibers and a Aqua, PVC outer jacket.

2.5 SINGLE MODE FIBER OPTIC CABLE SPECIFICATIONS

A. Manufacturer: SYSTIMAX SCS – TeraSPEED Singlemode cable
1. Outdoor Cables: Systimax Singlemode, Stranded Loose Tube Dielectric or Armored Dry Core Outdoor Cable designed for underground conduit, direct buried or aerial applications.
2. Building Cables: Singlemode/Non-plenum: TeraSPEED Backbone/Riser Rated Cable consisting of multiple singlemode fibers with a PVC outer jacket.
3. Building Cables: Singlemode/plenum, Systimax TeraSPEED Backbone/plenum Rated Cable, consisting of multiple singlemode fibers and a yellow, PVC outer jacket.

2.6 FIBER HARDWARE TERMINATION STANDARDS - Real Time Infrastructure Management - Intelligent Fiber Patch Panel

A. All Fiber to terminate on iPatch or ImVision Control panels. If a rack manager does not exist in the cabinet one must be added to manage the fiber infrastructure.

B. Systimax Solution iPatch Intelligent Fiber Optic Patching System as follows:
1. When install make sure cabinet rails are move back from front door.
2. Make sure there is vertical and horizontal management for the fiber.

Product Number	**Description**
Fiber Shelves (19 inch rack-mountable)	
760103085	360G2-1U-MOD-SD
760031856	RS-4AF-16SF
760105148	360 iPatch upgrade kit
760109496	360G2-12LC-SM-PT
760109488	360G2-12LC-LS-PT
760114975	24” Ribbon Cable
Rack manager	
760095562	360 iPatch Panel Manager (1per rack / cabinet)
760105353	360 iPatch Network Manager module (1 per Panel Manager Zone)

Product Number	**Description**
760161380	360 imVision Controller (provides both Network and Panel Manager functionality)

2.7 FIBER PATCH CORDS

A. Manufacturer: SYSTIMAX Solutions ONLY

B. The fiber patch cord shall consist of buffered, graded index fiber with a 50 micron core and a 125 micron cladding for multimode with an Aqua Jacket and a stepped-index 8.3 micron core with a 125 micron cladding for single mode with a Yellow Jacket. The fiber cladding shall be covered by aramid yarn and a jacket of flame retardant PVC.

C. Multimode Fiber Patch Cord
1. Multimode Fiber Patch Cord Part Numbers:

Product Number	Description
Multimode, 50 Micron, Single, LC to LC, LC to SC and LC to STII	
MX1LC-LC-xxx	LC to LC (xxx length designator)
MX1LC-SC-xxx	LC to SC (xxx length designator)
MX1LC-EP-xxx	LC to STII (xxx length designator)

Multimode, 50 Micron, Duplex, LC to LC, LC to SC and LC to STII	
MX2LC-LC-xxx	LC to LC (xxx length designator)
MX2LC-SC-xxx	LC to SC (xxx length designator)
MX2LC-EP-xxx	LC to STII (xxx length designator)

D. Singlemode Fiber Patch Cord
   1. Single mode Fiber Patch Cord Part Numbers:

Singlemode, 8.3 Micron, Single, LC to LC, LC to SC and LC to STII	
MS1LC-LC-xxx	LC to LC (xxx length designator)
MS1LC-SC-xxx	LC to SC (xxx length designator)
MS1LC-EP-xxx	LC to STII (xxx length designator)
Singlemode, 8.3 Micron, Duplex, LC to LC, LC to SC and LC to STII	
MS2LC-LC-xxx	LC to LC (xxx length designator)
MS2LC-SC-xxx	LC to SC (xxx length designator)
MS2LC-EP-xxx	LC to STII (xxx length designator)

E. Patch Cord Quantity. Patch cords spares shall be provided to match fiber strand assignment as shown in the fiber cable schedules included in the Drawings.

F. LC type connectors are HAS standard for all patch panel installations.
   1. When there is a requirement to transmit MATV service over the fiber infrastructure APC type pigtails must be used at. Design must specify APC type fiber jumpers as well.

G. Fiber splicing and closures shall be Commscope/Systimax. The fiber splice module shall meet the following specifications:
   1. Fusion
   2. Joins single mode or multi-mode fibers
   3. Establishes a permanent fusion splice
   4. May be used in OSP and/or premises applications
   5. Accept 250 and 900 micron fibers
   6. Re-enterable, re-arrangable and reusable
   7. Require no polishing
   8. Require no adhesives
   9. No loose parts
   10. Unlimited shelf life

2.8 BACKBONE COPPER CABLE – INSIDE PLANT

A. Manufacturer: Systimax, unless otherwise noted.

B. Non-plenum Backbone Cable – 24 AWG
   1. Multi-pair insulated with color-coded PVC copper cables shall be used as the

vertical riser cables. The cable shall support voice, data, and building service applications. All 50-pair and larger cable shall be conformance tested to meet ANSI/TIA/EIA 568B for Category 3 cables. The bending radius and pulling strength requirements of all backbone cables shall be observed during handling and installation. No cable count larger than 100 pair accepted

C. Non-plenum Backbone Cable – 22 AWG
   1. Manufacturer – Superior Essex or submitted and owner-approved equivalent
   2. 22 AWG 100-pair insulated with color-coded PVC copper cables shall be used only transition splices from OSP to inside cable. The ARAM cable shall be routed from the splice closure to the protector panel, as indicated in Drawings.

.

D. Plenum Backbone Cable
   1. The plenum cable shall consist of 24-AWG solid-copper conductors insulated with color- coded PVC. All 50-pair and larger cable shall be conformance tested to meet

      ANSI/TIA/EIA 568B for Category 3 cables. The cable shall be UL® and c (UL®) Listed for Fire Safety and ISO 9001 Certified. The plenum cable shall be available in 25, 50, and 100 pair.

E. The backbone copper cable shall meet or exceed the electrical specifications provided by the manufacture

2.9 BACKBONE COPPER CABLE – OUTSIDE PLANT

A. Manufacturer: Superior Essex or submitted and owner-approved equivalent

B. Superior Essex or submitted and owner-approved equivalent ASP-filled 22 AWG multi-pair copper cables shall be utilized for underground conduit or direct buried applications. The cable shall support voice, low-speed data, and building service applications. The bending radius and pulling strength requirements of all outside plant cables shall be observed during handling and installation. No cable count larger than 200 pair accepted.

C. Protectors (Outside Plant applications):

Product Number	Description	COM code
331901	Circa 1880NA1/NSC-200: 188-Type, 200-pair protector panel. Input on left side for front of cabinet.	N/A
331902	Circa 1880NA1/NSC-200: 188-Type, 200-pair protector panel. Input on right side for back of cabinet.	N/A

750031	Circa C4B1S: 5-pin solid-state protector module, black shell, 300 volt, sneak current protection and built-in test points.	N/A
4C3S-75	Solid-state protector unit for nonringing circuits (red)	105 581 086

D. Copper Cable Splice System
1. Copper Splice Systems are defined to include, but not limited to copper splice module, components, closure kits, supports and required accessories to provide a turnkey copper network system.
2. Copper cable to be spliced shall be 22 AWG OSP and 22 AWG inside cable as specified in the previous paragraphs.
3. Splices shall be inline, from underground OSP cable (filled metallic) to indoor cable (air core metallic).
4. Copper Splice Kit
   a. Manufacturer: Preformed Line Products or submitted and owner-approved equivalent.
   b. All splice kit products must be Commscope/Systimax Solutions material.
5. Copper Splice Closure Requirements
   a. Manufacturer: Preformed Line Products or submitted and owner-approved equivalent.
   b. Provide an inline, re-enterable copper cable closure.
      1) Metallic stainless steel.
      2) Finish shall be non-corrosive in all intended environments (see Drawings).
   c. Re-enterable without the need for special re-entry kit.

2.10 MULTI-PAIR CABLE TERMINATION HARDWARE

A. 110 Wiring Blocks
1. Manufacturer: SYSTIMAX
2. 110 blocks shall provide for the termination of horizontal, equipment, or tie cables. This high-density modular design shall be compatible with all voice and data circuits. The block shall be Underwriter's Laboratories (UL) listed.
3. Field-terminated, wall-mounted 110 Wiring Block part numbers are as follows:

Product Number	Description	COM code
110 Wiring Blocks With Legs (Small Installations)		
110AB2-100FT	4-pair	107 058 919
110AB2-300FT	4-pair	107 058 943
110 Wiring Block System With Back Panel (Larger Installations)		
110PB2-300FT	4-pair (Station)	107 058 810
110PB2-900FT	4-pair (Station)	107 058 869
110PB2-300FT	5-pair (Riser)	107 058 802
110PB2-900FT	5-pair (Riser)	107 058 851
188 Backboards w/distributing rings for 110 blocks		

188D3	300 pair	107 151 193
188C3	900 pair	107 151 185

4. Field-terminated, rack and cabinet mounted 110 Wiring Block part numbers are as follows:

Product Number	Description	COM code
110 Connector System Mounting Brackets		
110RD2-200-19	(2) 100-Pair Bracket	107 058 919
110 Wiring Block for Wiring Bracket		
110DW2-100	110 100-Pair Wiring Blocks	107 059 909
110 Jumper Troughs		
110B3	110 Troughs	107 831 141

B. Electrical requirements of Copper Termination Equipment per manufactures specification.

C. Wire Managers for Copper Termination Equipment
1. Vertical Wire Manager – Wall-mounted 110 Patch Panel System Backboard
   a. Manufacturer: Chatsworth or submitted and owner-approved equivalent
   b. One on each side
   c. Chatsworth part number(s) are as follows:

Product Number	Description	COM code
Single-Sided Narrow Vertical Cabling Section		
11730-7XX	Vertical Cabling Mgr (Black)	N/A

2. Horizontal Wire Managers –Wall-mounted 110 Patch Panel System Backboard
   a. Manufacturer: Systimax
   b. Above and below each hardware shelf.
   c. Systimax part number(s) are as follows:

Product Number	Description	COM code
110 Jumper Troughs		
110B3	110 Troughs	107 831 141

3. Horizontal Wire Managers – Racks and cabinets
   a. Manufacturer: Chatsworth or submitted and owner-approved equivalent
   b. Above and below each equipment shelf
   c. Not required with RJ45 patch panels
   d. Chatsworth part number(s) are as follows:

Product Number	Description	COM code
Horizontal Wire Managers		
11753-719	19” Medium Wire Manager	

D. Hybrid RJ45 to 110 Patch Cords.
1. Manufacturer: Systimax 119P2PS

2. As required provide Category 5e, Hybrid Patch Cords for each assigned data/voice port on the patch panel. Cords shall RJ45 connector on one end and 110GS on the other end. Cords shall be provided in appropriate lengths to accommodate all tenant voice or specialty ports as shown in detailed drawings. All Category 5e cordage shall be round, and consist of 24- AWG copper, stranded conductors, tightly twisted into individual pair and shall meet or exceed the Category 5e specifications.
3. Hybrid patch cords shall conform to the TIA 568B wiring scheme.
4. Hybrid patch cords shall be provided for each installed port designated as "Tenant Voice or Specialty jack" in the drawings.
5. Hybrid patch cord single pair part numbers are as follows(last 3 digits designates length):

Length	Material ID
8FT	CPC8662-03F-008
10FT	CPC8662-03F-010

6. Hybrid patch cord 2 pair part numbers are as follows(last 3 digits designates length):

Length	Material ID
8FT	CPC3852-03F-008
10FT	CPC3852-03F-010

7. Hybrid patch cord 4 pair part numbers are as follows(last 3 digits designates length):

Length	Material ID
8FT	CPC3812-03F-008
10FT	CPC3812-03F-010

2.11 IDENTIFIERS, LABELS AND LABELING SYSTEM

A. All Identification and Labeling shall follow Specification: 270553–Identification and Labeling of Communication Infrastructure. **Any deviation from the specification must be approved by HAS IT prior to installation.**

PART 3 EXECUTION

3.1 EXAMINATION

A. Verify raceways, boxes, hand holes and maintenance holes are properly installed following Sections 270528, and 270543.

B. All communication media must be installed in conduit or cable tray unless an alternate method has been approved by HAS/IT Infrastructure.

C. Verify backboards are properly installed.

D. Verify telecommunications grounding system is properly installed and tested following

Section 270526.

E. Verify liquid-carrying pipes are not installed in or above any IDF/MDF that has active electronic equipment. Do not proceed with installation in affected areas until removed.

3.2 PREPARATION

A. Environmental controlled communication rooms shall maintain temperature of between 64 degrees Fahrenheit and 78 degrees F and between 30 and 55 percent humidity in areas of active electronic system work.

B. Cable Splicing: Exact cable routing, splice enclosure locations, distances, elevations, work space and purpose of splice will be governed by actual field conditions. Contractor shall perform field surveys prior to submitting layout drawings.

C. Contractor's on-site RCDD supervisor shall review, approve and stamp all shop drawings, coordination drawings and record drawings.

3.3 INSTALLATION

A. Install work following drawings, manufacturer's instructions and approved submittal data. The number of cables per run, outlet configuration and other pertinent data are included on the drawings.

B. All installation shall be done in conformance with ANSI/TIA/EIA 568B standards, BICSI methods, Industry standards and SYSTIMAX SCS installation guidelines. The Contractor shall ensure that the maximum pulling tensions of the specified distribution cables are not exceeded and cable bends maintain the proper radius during the placement of the facilities. Failure to follow the appropriate guidelines shall require the Contractor to provide in a timely fashion the additional material and labor necessary to properly rectify the situation. This shall also apply to any and all damages sustained to the cables by the Contractor during the implementation.

C. The SCS installation shall comply with all applicable national and local codes pertaining to low voltage cable system installations.

D. The contractor shall adhere to the installation schedule of the general contractor and shall attend all construction meetings scheduled by the general contractor.

E. Upon structural completion of the communications room(s) and prior to the installation of any communications equipment or supporting devices inside the room, the City Engineer shall consult the Communications Designer in order to:
   1. Perform construction administration activities to compare as-built configuration to the design.
   2. Observe all "not-to-design" compliance issues and issue corrective advisement of actions.
   3. Upon completion of 1 and 2 above, the Communications Designer shall mark

with masking tape the general layout of the equipment placement.

F. Cable Splicing
   1. Splicing optical fibers shall be accomplished with the fusion method only; mechanical splices are not allowed.

   2. Copper splicing shall be accomplished using Systimax modules.
   3. Copper splicing shall be done using the fold-back method.
   4. All closures and splice cases shall be installed according to the manufacturer's installation procedures.
   5. All closures and splice cases shall be "flash tested" to ensure they are properly sealed.
   6. All splicing work and splicing hardware shall comply with the following:
      a. Cables shall be neatly routed and properly secured.
      b. Minimum bending radius for fiber and copper cables shall not be exceeded.
      c. Closures shall be properly mounted and secured.
   7. All closures, entry and exit cabling shall be labeled per specification 270553, easily visible from the finished floor.

G. The contractor shall perform all required cross connections of the horizontal cable runs to the backbone cable system. The equipment connections to the data systems shall be performed by the vendors installing and/or maintaining those systems.

H. The contractor is responsible for providing a CD with all the cable/patch panel information in the same format that will be accepted for download in HAS's iPatch database **1 month** prior any patching occurs.

I. The contractor is responsible and must perform the following task associated with the iPatch system:
   1. Connect iPatch Network Manger (or imVision Controller) to designated port on HAS network switch.
   2. Inter-connect iPatch Network Manager to rack managers if applicable.
   3. Confirm that all iPatch patch panels are on line.
   4. Configure network settings for iPatch Network Manage (or imVision Controller) with IP address, Mask and Gateway.
   5. Resolve patching conflicts associated with "Confirm" message on the iPatch Network Manager (or imVision Controller) Display.
   6. Resolve conflicts associated with "Alarms" on iPatch Network Manager or imVision Controller.
   7. Provide fiber cut sheet depicting fiber port to port or port to equipment connectivity.
   8. Provide an excel file compatible with imVision Import Wizard. The file will be used to build rooms, faceplates and jacks in iPatch database.
   9. Label all new devices including the iPatch Network Manager according to HAS labeling specs.
   10. Label all ports according to HAS labeling specs.
   11. Provide floor plans depicting rooms lay out and outlet locations.

12. Confirm iPatch ports are pointing toward the proper end device (iPatch to equipment or iPatch to iPatch connection).

J. The contractor shall provide service loops (slack) for cables terminating in the IDFs. A minimum of 10-foot service loop shall be provided above the access ceiling or cable trays unless specified otherwise. This allows for future changes or expansion without installing new cables.

K. The installation contractor shall be responsible for coordination, testing and problem resolution with the system vendors.

L. Label cable terminations on designation strips per specification 270553. Coordinate numbering with the City's automated cable management system..

M. Labels for backbone/riser cables shall be placed in the following locations: on jack face plates, on cable inside back boxes, junction boxes, access points, maintenance holes, and hand holes, on cable above the terminations in the IDF and MDF, on patch panels, and every 100 feet when not in conduit. Refer to specification 270553.

N. City inspector or their designated representative shall randomly perform unannounced, on-site reviews during the installation. In addition, this person shall perform a final inspection and a complete review of the test results before the installation is accepted.

O. Upon completion of the installation, Contractor shall prepare as-built documentation of the entire SCS. This documentation shall include:

1. As-Built Drawings
   a. All drawings shall be provided on CD in a form compatible with AutoCAD Version 14. A complete set of project plans will be provided to the Contractor on disk. The Contractor shall modify the drawings by placing the cable information on a separate layer. All of the requested drawings shall be placed on these plans so that all cable routes are to scale and provide accurate information for use in the future when changes are made and the exact location of cables are required to avoid service interruptions.
   b. A complete diagram of all terminations in the IDFs.
   c. A complete diagram of all copper, fiber, and coax riser cable.
   d. A complete diagram of all copper, fiber, and coax inter-building cable.
   e. Floor plans showing exact cable routings with each outlet clearly marked with cable number.
   f. A complete diagram of all cable tray, conduits and conduit sleeves.
2. Documentation
   a. All cable inventory data documentation shall be submitted in designated Microsoft Excel 2007 format, or ASCII, comma delimited files with fields in identical order so that data can be incorporated into existing databases.
   b. Documentation on horizontal cable shall include cable number and length of cable.
   c. Documentation on riser cable and inter-building cable shall include cable

number, source and destination, type of cable, length of cable and number of pairs or fibers.

d. Complete cross connect documentation is required. This information will include detailed documentation of all four pairs of each horizontal cable and every pair of all copper riser and inter-building cable and every fiber of fiber optic cable.

3. As-built Drawings and Documentation shall be reviewed, approved and stamped by Contractor's on-site RCDD.

3.4 POST-INSTALLATION TESTING AND CERTIFICATION

A. Contractor Requirements

1. Contractor shall provide sufficient skilled labor to complete testing within a reasonable test period.
2. Contractor shall have a minimum of three years' experience installing and testing structured cabling systems. All installers assigned by the Contractor to the installation shall be certified by the factory to install and test the provided products.
3. Contractor is responsible for supplying all of the required test equipment used to conduct acceptance tests.
4. Contractor is responsible for submitting acceptance documentation as defined in 3.04.D below. No cabling installation is considered complete until test results have been completed, submitted and approved as defined in 3.04.D below.
5. Contractor to insure that the database information for iPatch meets the HAS requirements.

B. Test Procedure

1. City Engineer reserves the right to be present during any or all testing. Notify City Engineer at least 48 hours prior to beginning test procedures.
2. Testing shall be of the Basic Link. However, Contractor shall warrant performance based on Channel performance and provide patch cords that meet channel performance.
3. All cabling not tested strictly in accordance with these procedures shall be re-tested at no additional cost to the Owner.
4. Testing of all copper and fiber wiring shall be performed prior to system(s) cutover.
5. 100% of the installed cabling shall be tested. All tests shall pass acceptance criteria defined in 3.05 below.
6. Cable testing shall be performed by a fully charged tester, and the charging unit shall be disconnected during testing.
7. Any pairs not meeting the requirements of the standard shall be brought into compliance by the contractor at no charge to the City. Complete end-to-end test results shall be submitted to the City.

C. Standards Compliance and Test Requirements

1. Copper Cabling shall meet the indicated performance specifications:

a. Category 3 Riser Cabling – ANSI/TIA/EIA 568B.2 Category 3 Backbone Cabling

2. Fiber Optic Cable shall meet the indicated performance specifications:
   a. Per manufactures specifications and standards.
3. All test equipment used shall meet the performance specifications defined in 3.04.E. below.

D. Cable Test Documentation
1. Test reports shall be submitted in hardcopy and electronic format and certified by the contractor's RCDD to be a complete and accurate record of cabling installed. Hand- written test reports are not acceptable.
2. Hardcopy reports are to be submitted in labeled three-ring binders with an attached affidavit verifying passing execution of all tests. For large installations (greater than 300 pair copper and/or greater than 72 strand fiber), electronic reports with hardcopy summaries are preferred. Hardcopy summary reports shall contain the following information on each row of the report: circuit ID, test specification used, cable length, date of test, and pass/fail result.
3. Electronic reports shall be submitted on CD in PDF format. . Electronic reports shall be accompanied by a Certificate signed by an authorized representative of the Contractor warranting the truth and accuracy of the electronic report. Certificate shall reference traceable circuit numbers that match the electronic record.
4. Hardcopy and electronic reports for each cable route shall be submitted together in one submittal. The submittal description shall include the type of test performed, type of cable, and cable ID (including originating and terminating room numbers) of cable tested. Partial or unclear documentation will be returned without reviewing.
5. Test reports shall include the following information for each cabling element tested:
   a. Wiremap results that indicate that 100% of the cabling has been tested for shorts, opens, miswires, splits, polarity reversals, transpositions, presence of AC voltage and end-to-end connectivity.
   b. For Category 3 cabling: Attenuation and NEXT data that indicate the worst case result, the frequency at which it occurs, the limit at that point, and the margin. These tests shall be performed in a swept frequency manner from 1 to 16 MHz. Information shall be provided for all pairs or pair combinations and in both directions. Any individual test that fails the relevant performance specification shall be marked as a FAIL.
   c. Length (in meters), propagation delay, and delay skew relative to the relevant limit. Any individual test that fails the relevant performance specification shall be marked as a FAIL.
   d. Cable manufacturer, cable model number/type, and NVP
   e. Tester manufacturer, model, serial number, hardware version, and software version
   f. Circuit ID number and project name
   g. Auto test specification used
   h. Overall pass/fail indication
   i. Date of test
6. Test reports shall be submitted within seven business days of testing.

E. Test Equipment

1. Test equipment used under this contract shall be from manufacturers that have a minimum of 5 years' experience in producing field test equipment. Manufacturers shall be ISO 9001 certified.
   a. Category 6 – Level III tester or owner-approved equivalent.
   b. Category 3 copper backbone/riser – 3M Dynatel 965 DSP Subscriber Loop Analyzer with Far End Device or submitted and owner-approved equivalent.
   c. Fiber Optic – Calibrated and certified OTDR, and optical power meter or submitted and owner-approved equivalent.
2. All test tools of a given type shall be from the same manufacturer, and have compatible electronic results output.
3. Test adapter cables shall be approved by the manufacturer of the test equipment. Adapters from other sources are not acceptable.
4. Baseline accuracy of the test equipment shall exceed TIA Level III, as indicated by independent laboratory testing.
5. Test equipment shall be capable of certifying Category 6 links.
6. Test equipment shall have a dynamic range of at least 100 dB to minimize measurement uncertainty.
7. Test equipment shall be capable of storing full frequency sweep data for all tests and printing color graphical reports for all swept measurements.
8. Test equipment shall include S-Band time domain diagnostics for NEXT and return loss (TDNXT and TDRL) for accurate and efficient troubleshooting.
9. Test equipment shall be capable of running individual NEXT, return loss, etc measurements in addition to auto tests. Individual tests increase productivity when diagnosing faults.
10. Test equipment shall include a library of cable types, sorted by major manufacturer.
11. Test equipment shall store at least 1000 Category 6 auto tests in internal memory.
12. Test equipment shall be able to internally group auto tests and cables in project folders for good records management.
13. Test equipment shall include DSP technology for support of advanced measurements.
14. Test equipment shall make swept frequency measurements in compliance with TIA standards.
15. The measurement reference plane of the test equipment shall start immediately at the output of the test equipment interface connector. There shall not be a time domain dead zone of any distance that excludes any part of the link from the measurement.
16. The Category 3 copper backbone/riser test equipment shall be capable of making frequency sweeps at an impedance of 135 Ohms at the following frequencies (kHz): 20, 30, 50, 69, 90, 110, 138, 276, 400, 600, 800, 1000, and 1100. A far-end device shall beused for all frequencies measurements. The loss at 138kHz shall not exceed -46 dB. The test set shall have the ability to store 100 tests and be able to upload to a PC.
17. The Category 3 copper backbone/riser test equipment shall be able to measure resistance between the following conductors: tip to ring, tip to ground, ring to ground. All measurements shall be greater than 9999 M ohms.

F. Optical Fiber Cable Testing w/ Optical Time Domain Reflectometer (OTDR) and Optical Power Loss Meter
   1. Test all lightguide cable prior to the installation of the cable. Assume liability for the replacement of the cable should it be found defective at a later date.
   2. All fiber testing shall be performed on all fibers in the completed end-to-end system. Testing shall consist of a bi-directional end-to-end OTDR trace performed per TIA/EIA 455-61and end-to-end in one direction for Optical Power loss meter measurement. The system loss measurements shall be provided at 850 and 1300 nanometers for multimode fibers and 1310 and 1550 for single mode fibers.
   3. Any link not meeting the requirements of the standard shall be brought into compliance by the contractor, at no charge to the City.
   4. End point locations.
   5. Test direction.
   6. Reference power measurement (when not using a power meter with a Relative Power Measurement Mode).
   7. Measured attenuation of the link segment.
   8. Acceptable link attenuation.
   9. Acceptable Attenuation Values shall comply with Systimax latest version of "Fiber Attenuation Calculation" spread sheet.

3.5 ACCEPTANCE

A. Once all work has been completed, test documentation has been submitted and approved, and City Engineer is satisfied that all work is in accordance with contract documents, the City Engineer will notify Contractor in writing of formal acceptance of the system.

B. Acceptance Requirements
   1. Contractor's RCDD shall warrant in writing that 100% of the installation meets the requirements specified under 3.04. "Standards Compliance & Test Requirements" above.
   2. City reserves the right to conduct, using Contractor equipment and labor, a random re-test of up to five percent of the cable plant to confirm documented results. Random re-testing, if performed, shall be at the expense of the City, using standard labor rates. Any failing cabling shall be re-tested and restored to a passing condition at no cost to the City. In the event more than two percent of the cable plant fails during re-test, the entire cable plant shall be re-tested and restored to a passing condition at no additional cost to the Owner.

   3. City Engineer may agree to allow certain cabling runs to exceed standardized performance criteria (e.g. length). In this event, such runs shall be explicitly identified and excluded from requirements to pass standardized tests.
   4. Acceptance shall be subject to completion of all work, successful post-installation testing which yields 100% PASS rating, and submittal and approval of full documentation as described in 3.04.

5. See Appendix A & B

3.6 DEMOLITION

A. The contractor shall be responsible for maintaining all communications service to areas of the building scheduled to remain in service during the period of renovation.

B. Notify HAS Information Technology (IT) department 30 days prior to the start of demolition work taking place in existing communications rooms. Coordinate removal of equipment and cabling within existing communications rooms with HAS IT.

C. Where removal is indicated in Drawings, remove communications cable from termination point back to originating communications room, MDF or tenant communications room. Coordinate removal at terminating blocks and panels with HAS IT. Coordinate removal of cross-connects and patch cables with HAS IT.

D. Ensure systems and circuits are no longer active before removing and prior to the demolition of existing communications rooms. If active circuits exist at time of scheduled demolition, coordinate with City Engineer to reroute or deactivate circuit(s).

E. Demolition and removal of cabling shall not impact the operation of active systems.

F. Unless otherwise noted, discard all removed cable, patch cables and cross-connects. Except where re-routing of cable is specified in Drawings or by Designer, do not reuse cable.

G. Remove all loose unterminated cabling to source found above ceiling, under floor or in wall.

H. All Demo shall include ALL Abandoned cables shall be removed in accordance with NEC 800.25

3.7 CLEANING

A. Remove all unnecessary tools and equipment, unused materials, packing materials, and debris from each area where work has been completed unless designated for storage.

END OF SECTION

SECTION 271500
HORIZONTAL MEDIA INFRASTRUCTURE

PART 1 GENERAL

1.1 SUMMARY

A. Provide a Structured Cabling System (SCS) for the purpose of supporting voice, data and video communications at the new HAS Project Management Office at IAH in Houston, TX.

B. Related Work:
1. Section 270553: Identification and Labeling of Communication Infrastructure
2. Section 271100: Communication Cabinets and Equipment Rooms
3. Section 271300: Backbone/Riser Media Infrastructure
4. Section 270528: Interior Communication Pathways
5. Section 270543: Exterior Communication Pathways
6. Section 270526: Telecommunications Grounding and Bonding
7. Section 272100 Data Communication Network Equipment
8. Section 272200: PC, Laptop and Server Equipment

1.2 SUBMITTALS

A. Qualifications: Demonstrate compliance with requirements of Paragraph 1.05A below.

B. Manufacturers' data, including part numbers, cut sheets and detailed descriptions, for all proposed equipment.

C. Cable inventory data shall be submitted for all fiber, copper, and coaxial cabling and termination equipment. Reference Specification 270553 for the Inside and Outside plant spread sheets. Information shall be provided on a CD.

D. Shop Drawings to be submitted and approved before implementation is started. Shop Drawings to be submitted in accordance with Specification 01340.

E. Record Drawings: Furnish CAD drawings, following format in Section 01340, of completed work including cable numbers. Refer to Specification 270553 for labeling conventions. Contractor's on-site Building Industry Consulting Services International (BICSI) Registered Communications Distribution Designer (RCDD) supervisor shall review, approve and stamp all shop drawings, coordination drawings and record drawings.

F. Cable Testing and Reports.
1. Submit Testing Plan prior to beginning cable testing.
2. Submit certified test reports of Contractor-performed tests in accordance with paragraph

3.04. of this document.

3. Electronic and hardcopy versions of test reports shall be submitted together and clearly identified with cable identification. Test results must be in both PDF and original raw format of approved tester.
4. Test reports shall be reviewed, approved and with a stamped cover letter by the Contractor's on-site RCDD.

G. Product data for all termination and test equipment to be used by Contractor to perform work.
1. Equipment shall be calibrated with traceability to National Institute of Standards and Technology (NIST) requirements.
2. Contractor shall include copy of calibration and certification that equipment calibration meets NIST standards and has been calibrated at least once in the previous calendar year.
3. Test equipment data shall be reviewed, approved and stamped by the Contractor's on-site RCDD prior to submitting.
4. Refer to 3.04. in this document for test equipment requirements.

H. Submit Technology Implementation Plan in accordance with 1.07 below.

I. Submit Cable Pulling Plan, as follows:
1. Indicate the installed backbone conduit layout in schematic format, including junction boxes and distances between junction boxes.
2. Indicate contents of each conduit.
3. Indicate the cable pulling calculations, conduit fill ratios and actual cable runs and tensions.
4. Cable Pulling Plan shall be reviewed, approved and stamped by the Contractor's on-site RCDD prior to submittal.
5. Installation of cabling shall not commence prior to approval of the pulling plan and calculations by the Architect/Engineer.

J. Submit installation plan indicating:
1. Equipment and personnel
2. Materials and staging area
3. Start and completion dates
4. Locations, including floor, room and building
5. Installation plan shall be reviewed, approved and stamped by the Contractor's on-site RCDD prior to submitting.

1.3 PROJECT CONDITIONS

A. Field Measurements: Verify dimensions in areas of installation by field measurements before fabrication and indicate measurements on Shop Drawings. Coordinate fabrication schedule with construction progress to avoid delaying the Work.

B. Established Dimensions: Where field measurements cannot be made without delaying the

Work, establish dimensions and proceed with fabricating units without field measurements. Coordinate supports, adjacent construction, and fixture locations to ensure actual dimensions correspond to established dimensions.

C. Maintain temperature of between 64 degrees Fahrenheit and 75 degrees Fahrenheit and between 30 and 55 percent humidity in areas of active electronic system work.

1.4 REFERENCES

A. The publications listed below form a part of this specification. The publications are referred to in the text by basic designation only.

B. Specific reference in specifications to codes, rules, regulations, standards, manufacturer's instructions, or requirements of regulatory agencies shall mean the latest printed edition of each in effect two weeks prior to the date of the Bidding Documents unless the document is shown dated.

C. Conflicts.
1. Between referenced requirements: Comply with the one establishing the more stringent requirements.
2. Between referenced requirements and contract documents: Comply with the one establishing the more stringent requirements.

D. References.
1. ANSI/TIA/EIA-568-B, Commercial Building Telecommunications Wiring Standards
2. ANSI/TIA/EIA-569-A Commercial Building Standard for Telecommunications Pathways and Spaces
3. ANSI/TIA/EIA-606 Administration Standard for the Telecommunications Infrastructure of Commercial Buildings
4. International Standards Organization/International Electromechanical Commission (ISO/IEC) DIS11801, January 6, 1994
5. Underwriters Laboratories (UL®) Cable Certification and Follow Up Program
6. National Electrical Manufacturers Association (NEMA)
7. American Society for Testing Materials (ASTM)
8. National Electric Code (NEC®) Latest Issue
9. National Electrical Safety Code (NESC) Latest Issue
10. Institute of Electrical and Electronic Engineers (IEEE)
11. UL Testing Bulletin
12. American National Standards Institute (ANSI) X3T9.5 Requirements for UTP at 100 Mbps
13. SYSTIMAX Structured Cabling Systems, Performance Specifications, Latest Issue
14. SYSTIMAX Structured Cabling Systems, Components Guide, Latest Issue
15. BICSI Telecommunications Distribution Methods Manual (TDMM) Latest Issue
16. Rural Utilities Service (RUS) Section 1755

1.5 QUALITY ASSURANCE

A. Submit written proof that the following experience requirements are being met.
   1. Contractor Qualifications
      a. The contractor shall be certified by the manufacturer of the products, adhere to the engineering, installation and testing procedures and utilize the authorized manufacturer components and distribution channels in provisioning this Project.
      b. Must be supervised on-site by a BICSI RCDD. Must demonstrate knowledge and compliance with all BICSI, TIA/EIA, UL, and NEC methods, standards and codes.
      c. All members of the installation team shall be certified by the manufacturer as having completed the necessary training to complete their part of the installation. Resumes of the entire team shall be provided along with documentation of completed training courses.
      d. The contractor shall provide five references for projects of equivalent scope, type and complexity of work completed within the last five years.
      e. The contractor who is installing the cabling infrastructure shall be a certified and currently registered Commscope/Systimax Premier or Select Business Partner capable of issuing a numbered registration certificate for the entire cable system.
      f. The contractor who is installing the cabling infrastructure shall have the following Systimax iPatch/imVision certifications:
         SP/ND3360 - SYSTIMAX SCS 360 Solutions
         SP/ND3321 - SYSTIMAX SCS Design & Engineering
         SP/ND3361 - SYSTIMAX SCS Installation and Maintenance
         GL5555 - SYSTIMAX SCS Certified imVision Support
         Specialist SP/ND5500 - SYSTIMAX SCS iPATCH Design &
         Engineering
         SP/ND5510 - SYSTIMAX SCS Certified iPATCH Support Specialist (CISS)
      g. Cable splicing personnel shall have a minimum of five years splicing experience and shall have completed a minimum of five major splicing projects.
   2. Manufacturer's hardware experience: All components shall be produced by manufacturers who have been regularly engaged in the production of telecommunications cabling components of the types to be installed in this project for a period of five years.

B. Materials and equipment: Equipment shall be rated for continuous operation under the ambient environmental temperature, humidity, and vibration conditions encountered at the installed location. The equipment shall meet the following requirements:
   1. Interior controlled environment: 60 to 100 degrees F dry bulb and 20 to 90 percent relative humidity, non-condensing.
   2. Interior uncontrolled environment: 0 to 130 degrees F dry bulb and 10 to 95 percent relative humidity, non-condensing.
   3. Exterior environments: Minus 30 degrees to 130 degrees F dry bulb, and 10 to

100 percent relative humidity, condensing.

4. Hazardous environment: All system components located in areas where fire or explosion hazards may exist because of flammable gas or vapors, flammable liquids, combustible dust, or ignitable fibers or flyings, shall be rated and installed according to Chapter 5 of the NFPA 70 and as shown.

C. Standard products:
   1. Equipment and materials shall be standard products of a manufacturer regularly engaged in the manufacture of telecommunications cabling products and shall be the manufacturer's latest standard design in satisfactory use for at least one year prior to bid opening.
   2. Items of the same classification shall be identical. This requirement includes equipment, modules, assemblies, parts, and components.

1.6 CONTRACTOR'S DUTIES

A. Contractor's RCDD shall provide all calculations and analysis to support design and engineering decisions as specified in the Submittals section.

B. Provide and pay for all labor, supervision, tools, equipment, test equipment, tests and services/programming to provide and install a complete inside and outside plant fiber and copper infrastructure system. Pay all required sales, gross receipts, and other taxes.

C. Secure and pay for plan check fees, permits, fees, and licenses necessary for the execution of Work as applicable for the project.

D. Give required notices.

E. Comply with all codes, ordinances, regulations, and other legal requirements of public authorities that bear on performance of Work.

1.7 PROCUREMENT

A. Procure equipment specified in this document as dictated by the timeline in Appendix A "Technology Implementation Schedule" in order to ensure that the technology is acquired in a timely fashion, but not outdated by the installation date.

B. Submit a copy of Appendix A "Technology Implementation Schedule" as a part of the equipment submittals required elsewhere in this document. Complete the columns headed "Quantity", "Purchasing Lead Time", "Start Date or Dependent", and "Installation Duration".

C. The "Procurement Lead Time" shall be expressed in days or weeks, and shall include time required for the contractor's personnel to order and receive the material. Substantiation may be required.

D. "Start Date or Dependent" and "Installation Duration" should be an accurate estimate based upon known facts in the project. Substantiation may be required.

E. The Contractor shall not purchase any materials requiring submittals until the owner approves the product submittal and the Technology Implementation Schedule for that material.

F. The Contractor shall not purchase any materials requiring submittals until the date established by the owner as the Purchasing Authorized Date. The Purchasing Authorized Date will be reflected in the "Purch Auth" column of Appendix A as a part of the Submittal Review process.

1.8 MAINTENANCE AND SUPPORT

A. System Assurance: The System Assurance shall cover the failure of the wiring system to support the application which it was designed to support, as well as additional application(s) introduced in the future by recognized standards or user forums that use the ANSI/TIA/EIA 568B or ISO/IEC IS 11801 component and link/channel specifications for cabling, for a twenty-year period.

B. System Certification: Upon successful completion of the installation and subsequent inspection, the customer shall be provided with a numbered certificate, from the manufacturing company, registering the installation.

C. Support Availability: The Contractor shall commit to make available local support for the product and system during the Warranty period.

1.9 EXTENDED WARRANTY

A. The Extended Product Warranty shall meet all manufactures specification to ensure against product defects, that all approved cabling components exceed the specifications of ANSI/TIA/EIA 568B and ISO/IEC IS 11801, exceed the attenuation and NEXT requirements of ANSI/TIA/EIA 568B and ISO/IEC IS 11801 for cabling links/channels, that the installation will exceed the loss and bandwidth requirements of ANSI/TIA/EIA 568B and ISO/IEC IS 11801 for fiber links/channels, for a twenty year period. The warranty shall apply to all passive SCS components.

B. The Extended Product Warranty and the System Assurance shall cover the replacement or repair of defective products and labor for the replacement or repair of such defective products.

1.10 DELIVERY AND STORAGE

A. Equipment shall be delivered in original packages with labels intact and identification clearly marked.

B. Equipment shall not be damaged in any way and shall comply with manufacturer's operating specifications.

C. Equipment and components shall be protected from the weather, humidity, temperature variations, dirt, dust, or other contaminants. Equipment damaged prior to system acceptance shall be replaced at no cost to the City.

PART 2 PRODUCTS

2.1 MANUFACTURERS

A. Subject to compliance with requirements, manufacturers offering products that may be incorporated into the Work include, but are not limited to SYSTIMAX SCS and other manufacturers as referenced in this document. However, substitutions for Systimax products are not permitted.

2.2 GENERAL

A. Provide all cabling, terminating hardware, adapters, and cross-connecting hardware necessary to interconnect all system equipment including equipment located in the Main Distribution Facility (MDF) and the Intermediate Distribution Facilities (IDFs).

2.3 COPPER CABLE GENERAL REQUIREMENTS

A. Manufacturer Qualifications: ISO 9001 Certified and included in the Underwriters Laboratories LAN Certification and Follow-up Program.

2.4 COPPER HORIZONTAL CABLING

A. Manufacturer: SYSTIMAX SCS XL7– XX71.

B. All horizontal cabling shall meet or exceed the ANSI/EIA/TIA-568B.2 Commercial Building Telecommunications Cabling Standard, Part 2: Balanced Twisted Pair Cabling Components.

C. Cables shall be marked as UL verified with a minimum of Category 6 rating.

D. All horizontal cabling shall be color-coded as follows to differentiate between tenant and owner cabling. All voice circuits will be terminated on patch panels. All horizontal cabling will terminate on patch panels. All tenant and specialty circuits will be cross connected to multi- pair cabling as required.
   1. Green – HAS Data. (This applies to all HAS devices needing data cabling)
      a. IP Cameras
      b. Wireless Access Points(APs) – (Requires two data cables for 802.11ac)
      c. Access Control Panels
      d. IP Phones
      e. Etc
   2. Yellow – Tenant Data
   3. Red – Special circuits, including Automated External Defibrillation (AED) Circuits

E. High performance (71 Series) Category 6 UTP, 4 Pair cabling shall be utilized to provide the signal medium from the individual workstation location to the IDF(s) unless denoted otherwise on the drawings. This cabling shall be installed in accordance with the contract drawings and shall adhere to the specifications listed below:
   1. 4 pair UTP
   2. 23 AWG Solid Bare Copper
   3. Cable jacket shall comply with NEC Article 800 for use as a plenum cable and shall be UL and c (UL) Listed Type CMP.
   4. Cable shall terminate on 8 pin modular jack at each outlet.

F. The high performance Category 6 UTP cable shall be of the traditional round design with mylar separator tape between pairs 2/3 and 1/4. The cable shall support Voice, Analog Baseband Video/Audio, Fax, Modem, Switched-56, T-1, ISDN, RS-232, RS-422, RS-485, 10BASE-T Ethernet, Token Ring, 100Mbps TP-PMD, 100BASE-T Ethernet, 155 Mbps ATM, AES/EBU Digital Audio, 270 Mbps Digital Video, 622 Mbps 64-CAP ATM and emerging high- bandwidth applications, including 1 Gbps Ethernet, gigabit ATM, as well as all 77 channels (550 Mhz , single swept margin) of analog broadband video.

G. The high performance Category 6 cables shall meet or exceed the electrical characteristics set by the manufactures specifications.

H. The high performance Category 6 cable shall be specified to 550 MHz and shall meet the guaranteed swept margin as set by the manufacture.

I. Systimax part numbers for Plenum-rated Horizontal Cabling are as follows:

Product Number	Color	COM code	Qty per Unit
2071004EYL	Yellow	700210123	W1000
2071004EGR	Green	700210164	W1000
2071004ERD	Red	700210263	W1000

2.5 VIDEO COAXIAL CABLE (MATV)

A. Manufacturer: CommScope or approved equivalent.

B. The shielded, plenum RG-11 cable shall be used where the horizontal run is greater then 350 feet or specified in the Contract Drawings.
   1. Shall consist of a 14-AWG solid-copper conductor. The cable shall be UL and (UL) Listed for Fire Safety and ISO 9001 Certified.
   2. CommScope part number – 2287K Plenumax
   3. Must use compression type connectors from IDEAL part number:
      a. IDEAL F connector - #89-011
   4. The copper cable shall meet or exceed the electrical specifications set by the manufacture.

C. The Quad shielded, plenum RG-6 cable shall be used as horizontal where specified in the Contract Drawings.
   1. Shall consist of a 18-AWG solid-copper conductor. The cable shall be UL and (UL) Listed for Fire Safety and ISO 9001 Certified.
   2. CommScope part number – 2227V Plenumax
   3. Must use compression type connectors from IDEAL part number:
      a. IDEAL F connector - #89-056
      b. IDEAL BNC connector - #89-057(security camera install only)
   4. The copper cable shall meet or exceed the electrical specifications set by the manufacture.

2.6 SECURITY CABLES

A. Manufacturer: CommScope or approved equivalent.

B. RG-6(for analog cameras) cable shall be used as horizontal where specified in the Contract Drawings. This cable supplies both video and power media.
   1. Shall consist of an 18-AWG solid-copper conductor. The cable shall be UL and (UL) Listed for Fire Safety and ISO 9001 Certified.
   2. CommScope part number – 5654
   3. Must use compression type connectors from IDEAL part number:
      a. IDEAL F connector - #89-056
      b. IDEAL BNC connector - #89-057(security camera install only)
   4. The copper cable shall meet or exceed the electrical specifications set by the manufacture.

C. RG-6(for analog cameras) cable shall be used as horizontal OUTDOOR use where specified in the Contract Drawings.
   1. Shall consist of an 18-AWG solid-copper conductor. The cable shall be UL and (UL) Listed for Fire Safety and ISO 9001 Certified.
   2. CommScope part number – 5720
   3. Must use compression type connectors from IDEAL part number:
      a. IDEAL F connector - #89-056
      b. IDEAL BNC connector - #89-057(security camera install only)
   4. The copper cable shall meet or exceed the electrical specifications set by the manufacture.

D. Composite Cables: Cable between controlled portals and IFPs shall consist of multiple conductor bundles affixed together via a central spline. The conductor bundles shall consist of the following:
   1. 4C, 18 AWG 16/30 STR, shielded
   2. 3P, 22 AWG 7/30 STR, shielded
   3. 2C, 22A AWG 7/30 STR, shielded
   4. 4C, 22 AWG 7/30 STR, shielded

5. The composite access control cable shall be Honey Well Genesis 3295 or approved equivalent.

E. 4 CONDUCTOR CABLE (for use with dry contact devices including door position switches, duress alarm switches, etc.
1. 4 stranded (7 x28) tinned copper conductors
2. Nomminal O.D.: .217”
3. Belden 9444 or approved equivalent

2.7 FIBER PATCH CORDS

A. Manufacturer: SYSTIMAX Solutions ONLY. If required see specification 271300.

2.8 COPPER HARDWARE TERMINATION STANDARDS - Real Time Infrastructure Management - Intelligent Patch Panel System

A. All horizontal data cables to terminate on iPatch panel. If a rack manager does not exist in the cabinet one must be added to manage the horizontal infrastructure.
B. Systimax Solution iPatch Intelligent Fiber Optic Patching System as follows:

Product Number	**Description**
Fiber Shelves (19 inch rack-mountable) and accessories	
760105171	360-ip-G2-1U-LC-SD
760031856	RS-2AF-16SF
760105148	360 iPatch/imVision upgrade kit
760109470	12-LC-LS-AQ-Pigtails
760109488	12-LC-MM-BG-Pigtails
760109496	12-LC-SM-BL-Pigtails
760109504	12-LCA-SM-GR-Pigtails
760114975	24" Ribbon Cable
Copper Patch Panels	
760152355	360-iP-1100-E-GS3-1U-24 - 360 iPatch/imVision(enabled) 24 port panel
760152330	360-iP-1100-E-GS3-1U-48 - 360 iPatch/imVision(enabled) 48 port panel
760152561	360-IPR-1100-E-GS3-1U-24 - 360 iPatch/imVision(ready) 24 port panel
760152579	360-IPR-1100-E-GS3-1U-48 - 360 iPatch/imVision(ready) 48 port panel

imVision Rack manager	
760161380	360-imV-CNTRLR - 360 imVision Panel Manager (1 per rack / cabinet)

C. Modular Patch Cords
1. Manufacturer: Systimax SCS-GS8E
2. Provide Category 6, Modular Patch Cords for each installed port designated as "Data" in the Drawings.
3. All cords shall conform to the requirements of ANSI/TIA/EIA 568-B.2 Commercial Building Telecommunications Cabling Standard, Horizontal Cabling Section, and be part of the UL® LAN Certification and Follow-up Program. Cords shall be equipped with an 8 pin modular connector on each end and shall conform to the length(s) specified on the detailed drawing. All Category 6 cordage shall be round, and consist of 23-AWG copper, stranded conductors, tightly twisted into individual pairs and shall meet or exceed the electrical specifications set by the manufacture.

4. UTP Patch cord lengths will be deployed as follows:

Length	Location/Application
3 ft	MDF, IDF, Computer Room, and Lab
5 ft	MDF, IDF, Computer Room, and Lab
7 ft	MDF, IDF, Computer Room, and Lab
9 ft	MDF, IDF, Computer Room, Office, Cubicle, or Lab
15 ft	Office, Cubicle, or Lab

5. Copper patch cord part numbers are as follows:

Product Number	Length	Material ID
GS8E-3ft	3FT	CPC3312-03F003
GS8E-5ft	5FT	CPC3312-03F005
GS8E-7ft	7FT	CPC3312-03F007
GS8E-9ft	9FT	CPC3312-03F009
GS8E-15ft	15FT	CPC3312-03F015

NOTE: 15 ft. UTP patch cords shall be used at the workstation only.

D. Hybrid RJ45 to 110 Patch Cords.
1. Manufacturer: Systimax 119P2PS
2. As required provide Category 6, Hybrid Patch Cords for each assigned data/voice port on the patch panel. Cords shall RJ45 connector on one end and 110GS on the other end. Cords shall be provided in appropriate lengths to accommodate all tenant voice or specialty ports as shown in detailed drawings. All Category 6 cordage shall be round, and consist of 24- AWG copper, stranded conductors, tightly twisted into individual pair and shall meet or exceed the Category 5e specifications.

3. Hybrid patch cords shall conform to the TIA 568B wiring scheme.
4. Hybrid patch cords shall be provided for each installed port designated as "Tenant Voice or Specialty jack" in the drawings.
5. Hybrid patch cord single pair part numbers are as follows(last 3 digits designates length):

Length	Material ID
8FT	CPC8662-03F-008
10FT	CPC8662-03F-010

6. Hybrid patch cord 2 pair part numbers are as follows(last 3 digits designates length):

Length	Material ID
8FT	CPC8352-03F-008
10FT	CPC8352-03F-010

7. Hybrid patch cord 4 pair part numbers are as follows(last 3 digits designates length):

Length	Material ID
8FT	CPC8312-03F-008
10FT	CPC8312-03F-010

E. Outlets
1. Manufacturer: Systimax
2. Systimax MGS400 Modular GigaSpeed Information Outlets - 8 position/8 conductor non-keyed modular outlets for applications up 1 Gbps and ANSI/TIA/EIA 568-B compliant for Category 6 transmission requirements and be part of the UL® LAN Certification and Follow-up Program.
3. Outlets shall meet or exceed the following electrical and mechanical specifications set by the manufacture.
4. Standard installations shall utilize orange outlets for data. Dust Cover/Blanks shall match faceplate cover.
5. All IMO's (Interactive Media Outlet) shall have at a minimum 4-data ports at each location unless otherwise specified by the contract documents.
6. Systimax MGS400 Modular GigaSpeed Information Outlets part numbers are as follows:

Product Numbering	# per pack	Color	COM code
MGS400-112	1	Orange	700 206 683

7. Systimax M-Series Modular Faceplates designed for use with M-Series Modular Information Outlets:

Product Numbering	# of ports	# per pack	Color	COM code
M10L-262	1	1	White	108 258 427
M10LW-262	1 (wall)	1	White	108 258 468
M12L-262	2	1	White	108 168 469

M14L-262	4	1	White	108 168 543

8. Systimax M-Series Modular Surface Mount Box designed for use with one to four M- Series Modular Information Outlets. May be mounted on a flat surface with screws, Box color shall match wall/furniture surface color:

Product Numbering	# of ports	# per pack	Color	COM code
M104SMB-262	4	1	White	107 952 459
M104SMB-270	4	1	Gray	107 952 467

2.9 IDENTIFIERS, LABELS AND LABELING SYSTEM

A. All Identification and Labeling shall follow Specification: 270553–Identification and Labeling of Communication Infrastructure. **Any deviation from the specification must be approved by HAS IT prior to installation.**

PART 3 EXECUTION

3.1 EXAMINATION

A. Verify raceways, boxes, hand holes and maintenance holes are properly installed following Sections 270528, and 270543.

B. All communication media must be installed in conduit or cable tray unless an alternate method has been approved by HAS/IT.

C. Verify horizontal conduit is minimum 1-inch diameter.

D. Verify backboards are properly installed.

E. Verify telecommunications grounding system is properly installed and tested following Section 270526.

F. Verify liquid-carrying pipes are not installed in or above any IDF/MDF that has active electronic equipment. Do not proceed with installation in affected areas until removed.

3.2 PREPARATION

A. Environmental controlled communication rooms shall maintain temperature of between 64 degrees Fahrenheit and 78 degrees F and between 30 and 55 percent humidity in areas of active electronic system work.

B. Cable Splicing: Exact cable routing, splice enclosure locations, distances, elevations, work space and purpose of splice will be governed by actual field conditions. Contractor shall perform field surveys prior to submitting layout drawings.

C. Contractor's on-site RCDD supervisor shall review, approve and stamp all shop drawings,

coordination drawings and record drawings.

3.3 INSTALLATION

A. Install work following drawings, manufacturer's instructions and approved submittal data. The number of cables per run, outlet configuration and other pertinent data are included on the drawings.

B. All installation shall be done in conformance with ANSI/TIA/EIA 568B standards, BICSI methods, Industry standards and SYSTIMAX SCS installation guidelines. The Contractor shall ensure that the maximum pulling tensions of the specified distribution cables are not exceeded and cable bends maintain the proper radius during the placement of the facilities. Failure to follow the appropriate guidelines shall require the Contractor to provide in a timely fashion the additional material and labor necessary to properly rectify the situation. This shall also apply to any and all damages sustained to the cables by the Contractor during the implementation.

C. The SCS installation shall comply with all applicable national and local codes pertaining to low voltage cable system installations.

D. The contractor shall adhere to the installation schedule of the general contractor and shall attend all construction meetings scheduled by the general contractor.

E. Upon structural completion of the communications room(s) and prior to the installation of any communications equipment or supporting devices inside the room, the HAS IT Representative shall consult the Communications Designer in order to:
   1. Perform construction administration activities to compare as-built configuration to the design.
   2. Observe all "not-to-design" compliance issues and issue corrective advisement of actions.
   3. Upon completion of 1 and 2 above, the Communications Designer shall mark with masking tape the general layout of the equipment placement.

F. Vertical Cabinet Installation
   1. All Cabinets shall be properly positioned, leveled, ganged, anchored, grounded and powered.
   2. All Cabinets shall be populated as noted in drawings with termination hardware, equipment, proper patch cord lengths, and power outlets.
   3. Install and anchor all vertical equipment cabinets to floor following the Drawings and manufacturer's instructions.
   4. All cabinets shall be properly ganged in each bay as shown in the Drawings.
   5. All cabinet doors shall be configured as shown in the Drawings.
   6. All cabinets shall be properly labeled per specification 270553.
   7. After final acceptance of the cabinets, coordinate with Owner to replace key/lock with silver barrel on front and back doors.

G. The contractor shall perform all required cross connections of the horizontal cable runs to the backbone cable system. The equipment connections to the data systems shall be performed by the vendors installing and/or maintaining those systems.

H. The contractor is responsible for providing a CD with all the cable/patch panel information in the same format that will be accepted for download in HAS's iPatch/imVision database **1 month** before any patching is completed.

I. The contractor is responsible and must perform the following task associated with the iPatch system:
   1. Connect iPatch/imVision Network Manger to designated port on HAS network switch.
   2. Inter-connect iPatch/imVision Network Manager to rack managers if applicable.
   3. Confirm that all iPatch/imVision patch panels are on line.
   4. Configure network settings for iPatch Network Manage with IP address, Mask and Gateway.
   5. Resolve patching conflicts associated with "Confirm" message on the iPatch Network Manager Display.
   6. Resolve conflicts associated with "Alarms" on iPatch/imVision Network Manager.
   7. Provide fiber cut sheet depicting fiber port to port or port to equipment connectivity.
   8. Provide an excel file compatible with iPatch/imVision Bulk Import tool. The file will be used to build rooms, faceplates and jacks in iPatch/imVision database.
   9. Label all new devices including the iPatch/imVision Network Manager according to HAS labeling specs.
   10. Label all components according to HAS labeling specs.
   11. Provide floor plans depicting rooms lay out and outlet locations.
   12. Confirm iPatch/imVision ports are pointing toward the proper end device (iPatch/imVision to equipment or iPatch/imVision to iPatch/imVision connection).
   13. Data cabling contractor is to provide and install an iPatch/imVision 48 port copper patch panel for all new network switches/blades that are related to the project. Provide solid conductor patch cables with RJ-45 on one end and terminate the other end on the patch panel. Patch port 1 of the patch panel to port 1 on the switch until all ports on the switch are connected to the patch panel matching the port numbers.

J. The contractor shall provide service loops (slack) for cables terminating in the IDFs. A 6-foot service loop shall be provided above the access ceiling or cable trays unless specified otherwise. This allows for future changes or expansion without installing new cables.

K. The installation contractor shall be responsible for coordination, testing and problem resolution with the system vendors.

L. City inspector or their designated representative shall randomly perform unannounced, on-site reviews during the installation. In addition, this person shall perform a final inspection and a complete review of the test results before the installation is accepted.

M. Upon completion of the installation, Contractor shall prepare as-built documentation of the entire SCS. This documentation shall include:
   1. As-Built Drawings
      a. All drawings shall be provided on disk in a form compatible with AutoCAD Version 14. A complete set of project plans will be provided by the Contractor on CD.
      b. A complete diagram of all terminations in the IDFs.
      c. A complete diagram of all copper, fiber, and coax riser cable.
      d. A complete diagram of all copper, fiber, and coax inter-building cable.
      e. Floor plans showing exact cable routings with each outlet clearly marked with cable number.
      f. A complete diagram of all cable tray, conduits and conduit sleeves.
   2. Documentation
      a. All cable inventory data documentation shall be submitted in designated as specified in specification 270553
      b. Documentation on horizontal cable shall include cable number and length of cable.
      c. Complete cross connect documentation is required. This information will include detailed documentation of all four pairs of each horizontal cable and every pair of all copper riser and inter-building cable and every fiber of fiber optic cable.
   3. As-built Drawings and Documentation shall be reviewed, approved and stamped by Contractor's on-site RCDD.

3.4 POST-INSTALLATION TESTING AND CERTIFICATION

A. Contractor Requirements
   1. Contractor shall provide sufficient skilled labor to complete testing within a reasonable test period.
   2. Contractor shall have a minimum of three years experience installing and testing structured cabling systems. All installers assigned by the Contractor to the installation shall be certified by the factory to install and test the provided products.
   3. Contractor is responsible for supplying all of the required test equipment used to conduct acceptance tests.
   4. Contractor is responsible for submitting acceptance documentation as defined in 3.04.D below. No cabling installation is considered complete until test results have been completed, submitted and approved as defined in 3.04.D below.
   5. Contractor to insure that the database information for iPatch meets the HAS requirements.

B. Test Procedure
   1. HAS IT Representative reserves the right to be present during any or all testing. Notify HAS IT Representative at least 48 hours prior to beginning test procedures.
   2. Testing shall be of the Permanent Link. However, Contractor shall warrant performance based on Channel performance and provide patch cords that meet channel performance.

3. All cabling not tested strictly in accordance with these procedures shall be re-tested at no additional cost to the Owner.
4. Testing of all copper and fiber wiring shall be performed prior to system(s) cutover.
5. 100% of the installed cabling shall be tested. All tests shall pass acceptance criteria defined in 3.05 below.
6. Cable testing shall be performed by a fully charged tester, and the charging unit shall be disconnected during testing.
7. Any pairs not meeting the requirements of the standard shall be brought into compliance by the contractor at no charge to the City. Complete end-to-end test results shall be submitted to the City.

C. Standards Compliance and Test Requirements
1. Copper Cabling shall meet the indicated performance specifications:
   a. Category 6 Horizontal Cabling shall be tested to the manufactures specification for Category 6 Cabling and SYSTIMAX SCS GigaSpeed System.
2. All test equipment used shall meet the performance specifications defined in 3.04.

D. Cable Test Documentation
1. Test reports shall be submitted in hardcopy and electronic format and certified by the contractor's RCDD to be a complete and accurate record of cabling installed. Hand- written test reports are not acceptable.
2. Hardcopy reports are to be submitted in labeled three-ring binders with an attached affidavit verifying passing execution of all tests. Hardcopy summary reports shall contain the following information on each row of the report: circuit ID, test specification used, cable length, date of test, and pass/fail result.
3. Electronic reports shall be submitted on CD in PDF format. Electronic reports shall be accompanied by a Certificate signed by an authorized representative of the Contractor warranting the truth and accuracy of the electronic report. Certificate shall reference traceable circuit numbers that match the electronic record.
4. Hardcopy and electronic reports for each cable route shall be submitted together in one submittal. The submittal description shall include the type of test performed, type of cable, and cable ID (including originating and terminating room numbers) of cable tested. Partial or unclear documentation will be returned without reviewing.
5. Test reports shall include the following information for each cabling element tested:
   a. Wiremap results that indicate that 100% of the cabling has been tested for shorts, opens, miswires, splits, polarity reversals, transpositions, presence of AC voltage and end-to-end connectivity.
   b. For Category 6 cabling: Attenuation, NEXT, PSNEXT, Return Loss, ELFEXT, and PSELFEXT data that indicate the worst case result, the frequency at which it occurs, the limit at that point, and the margin. These tests shall be performed in a swept frequency manner from 1 MHz to highest relevant frequency, using a swept frequency interval that is consistent with TIA and ISO requirements. Information shall be provided for all pairs or pair combinations and in both directions when required by the appropriate standards. Any

individual test that fails the relevant performance specification shall be marked as a FAIL. Test shall also include mutual capacitance and characteristic impedance.

c. Length (in feet), propagation delay, and delay skew relative to the relevant limit. Any individual test that fails the relevant performance specification shall be marked as a FAIL.
d. Cable manufacturer, cable model number/type, and NVP
e. Tester manufacturer, model, serial number, hardware version, and software version
f. Circuit ID number and project name
g. Autotest specification used
h. Overall pass/fail indication
i. Date of test

6. Test reports shall be submitted within seven business days of testing.

E. Test Equipment

1. Test equipment used under this contract shall be from manufacturers that have a minimum of 5 years experience in producing field test equipment. Manufacturers shall be ISO 9001 certified.
   a. Category 6 – At minimum a Level III tester or submitted and owner-approved equivalent.
2. All test tools of a given type shall be from the same manufacturer, and have compatible electronic results output.
3. Test adapter cables shall be approved by the manufacturer of the test equipment. Adapters from other sources are not acceptable.
4. Baseline accuracy of the test equipment shall exceed TIA Level III, as indicated by independent laboratory testing.
5. Test equipment shall be capable of certifying Category 6 links.
6. Test equipment shall have a dynamic range of at least 100 dB to minimize measurement uncertainty.
7. Test equipment shall be capable of storing full frequency sweep data for all tests and printing color graphical reports for all swept measurements.
8. Test equipment shall include S-Band time domain diagnostics for NEXT and return loss (TDNXT and TDRL) for accurate and efficient troubleshooting.
9. Test equipment shall be capable of running individual NEXT, return loss, etc measurements in addition to autotests. Individual tests increase productivity when diagnosing faults.
10. Test equipment shall include a library of cable types, sorted by major manufacturer.
11. Test equipment shall store at least 250 Category 6 autotests (in full graphic format) in internal memory, with the option for additional storage card via expansion slot.
12. Test equipment shall be able to internally group autotests and cables in project folders for good records management.
13. Test equipment shall include DSP technology for support of advanced measurements.
14. Test equipment shall make swept frequency measurements in compliance with TIA

standards.

15. The measurement reference plane of the test equipment shall start immediately at the output of the test equipment interface connector. There shall not be a time domain dead zone of any distance that excludes any part of the link from the measurement.

3.5 ACCEPTANCE

A. Once all work has been completed, test documentation has been submitted and approved, and HAS IT Representative is satisfied that all work is in accordance with contract documents, the HAS IT Representative will notify Contractor in writing of formal acceptance of the system.

B. Acceptance Requirements
   1. Contractor's RCDD shall warrant in writing that 100% of the installation meets the requirements specified under 3.04. "Standards Compliance & Test Requirements" above.
   2. HAS IT Representative reserves the right to conduct, using Contractor equipment and labor, a random re-test of up to five percent of the cable plant to confirm documented results. Random re-testing, if performed, shall be at the expense of the City, using standard labor rates. Any failing cabling shall be re-tested and restored to a passing condition at no cost to the City. In the event more than two percent of the cable plant fails during re-test, the entire cable plant shall be re-tested and restored to a passing condition at no additional cost to the Owner.
   3. HAS IT Representative may agree to allow certain cabling runs to exceed standardized performance criteria (e.g. length). In this event, such runs shall be explicitly identified and excluded from requirements to pass standardized tests.

   4. Acceptance shall be subject to completion of all work, successful post-installation testing which yields 100% PASS rating, and submittal and approval of full documentation as described in 3.04.
   5. See Appendix A & B. Acceptance requirements are not limited to these sheets

3.6 DEMOLITION

A. The contractor shall be responsible for maintaining all communications service to areas of the building scheduled to remain in service during the period of renovation.

B. Notify HAS Information Technology (IT) department 30 days prior to the start of demolition work taking place in existing communications rooms. Coordinate removal of equipment and cabling within existing communications rooms with HAS IT.

C. Where removal is indicated in Drawings, remove communications cable from termination point back to originating communications room, MDF or tenant communications room. Coordinate removal at terminating blocks and panels with HAS IT. Coordinate removal of cross-connects and patch cables with HAS IT.

D. Ensure systems and circuits are no longer active before removing and prior to the demolition of existing communications rooms. If active circuits exist at time of scheduled demolition, coordinate with HAS IT Representative to reroute or deactivate circuit(s).

E. Demolition and removal of cabling shall not impact the operation of active systems.

F. Unless otherwise noted, discard all removed cable, patch cables and cross-connects. Except where re-routing of cable is specified in Drawings or by Designer, do not reuse cable.

G. Remove all loose unterminated cabling to source found above ceiling, under floor or in wall.

H. Demo all abandoned cable in accordance with NEC 800.25.

3.7 CLEANING

A. Remove all unnecessary tools and equipment, unused materials, packing materials, and debris from each area where Work has been completed unless designated for storage.

END OF
SECTION

SECTION 272100
DATA COMMUNICATION NETWORK EQUIPMENT

PART 1 - GENERAL

1.1 SUMMARY

A. Provide the Local Area Network (LAN) active components and interfaces to be implemented and utilized in the Houston Airport System network to support present and future communications systems requirements for the new Project Management Office at IAH.

1.2 REFERENCES

A. The publications listed below form a part of this specification. The publications are referred to in the text by basic designation only.

B. Specific reference in specifications to codes, rules, regulations, standards, manufacturer's instructions, or requirements of regulatory agencies shall mean the latest printed edition of each in effect at the date of contract unless the document is shown dated.

C. Related Work:
1. Section 270553: Identification and Labeling of Communication Infrastructure
2. Section 271100 Communication Cabinets and Equipment Rooms
3. Section 271300: Backbone and Riser Media Infrastructure
4. Section 271500: Horizontal Media Infrastructure
5. Section 270528: Interior Communication Pathways
6. Section 270543: Exterior Communication Pathways
7. Section 270526: Telecommunications Grounding and Bonding
8. Section 272200: PC, Laptop, and Server Equipment

D. Conflicts.
1. Between referenced requirements: Comply with the one establishing the more stringent requirements.
2. Between referenced requirements and contract documents: Comply with the one establishing the more stringent requirements.

E. References:
1. National Electrical Manufacturers Association (NEMA)
2. American Society for Testing Materials (ASTM)
3. National Electric Code (NEC)
4. Institute of Electrical and Electronic Engineers (IEEE)
5. UL Testing Bulletin
6. American National Standards Institute (ANSI) X3T9.5 Requirements for UTP at

100 Mbps

1.3 DEFINITIONS

A. *ANSI* – American National Standards Institute

B. *ATM* – Asynchronous Transfer Mode

C. *EIA* – Electronics Industries Alliance

D. *Gbps* – Gigabits per second

E. *IEEE* – Institute of Electrical and Electronic Engineers

F. *ISO* – International Organization for Standardization

G. *Mbps* – Megabits Per Second

H. *MIMO* – Multiple-In and Multiple-Out

I. *Multi-path* – The possible multiple routes of a single source of RF energy due to reflection, refraction, or diffraction.

J. *NEC* – National Electrical Code

K. *NEMA* – National Electrical Manufacturing Association

L. *RF* (Radio Frequency) – Signal generated by a radio transmitter and sent out through an antenna. The frequency of the transmission is described in terms of the number of cycles per second or Hertz (Hz).

M. *SFP* – Small Form-Factor Pluggable – Hot-pluggable transceiver used for both telecommunication and data communication applications. Comes in both copper and fiber.

N. *SNMP* – Simple Network Management Protocol

O. *TIA* – Telecommunications Industry Association

P. *TR* – Telecommunications Room

Q. *UL* – Underwriter's Laboratories

R. *VoIP* – Voice over Internet Protocol

S. *WAP* – Wireless Application Protocol

T. *WPA/WPA2* – WiFi Protected Access / WiFi Protected Access II – IEEE 802.11i-2004

1.4 DESIGN AND PERFORMANCE STANDARDS

A. Standards supported should include, but be not limited to, IEEE 802.3, 10BASET, IEEE 802.3u, 100BaseTX, 1000BaseFX, IEEE 802.11, IEEE 802.3ae-2002, Ethernet MIB (RFC 1643), SNMP MIB II (RFC 1213).

1.5 SUBMITTALS

A. Qualifications: Demonstrate compliance with requirements of Paragraph 1.07.A.

B. Submit Technical Implementation Plan in accordance with 2.06.

C. Submit manufacturer's technical data for each product provided.

D. Submit technical and operations manuals. Manuals shall describe function, operation, and programmable parameters for each card and port for each device to be installed. Manuals shall include required maintenance to be performed.
   1. Manuals shall describe function, operation, and programmable parameters for each card and port for each device to be installed. Manuals shall include required maintenance to be performed.
   2. Manuals shall be suitable for the training of future personnel by the City, and for use as a reference by currently employed personnel in performing work assignments.

E. As-built documentation. Notes shall be kept during initial installation and shall be made a permanent part of the installation manual pages as required.

F. For each active device installed, provide a printed configuration including a printout of the device as displayed on the network management system. Printed configuration parameters for each port on the device shall accompany the written report.

G. Other information in support of the design, fabrication, and installation of the LAN system.

H. An implementation schedule listing dates for LAN equipment installations for approval by the City Engineer. The dates of LAN equipment installations shall be in accordance with dates for installation of the various special systems and users. It is incumbent upon the LAN implementers to include the dates for special system and user installs into the schedule.

1.6 CONTRACTOR'S DUTIES

A. Perform all work, coordination, systems integration, engineering design, and testing, and shall provide all products required in order to ensure a fully operative system and proper installation of equipment. System operability and proper installation shall be verified via completion of the acceptance test plan.

B. Coordinate all installation activities and details with the Houston Airport Systems'

Information Technology (HAS IT) Representative. The HAS IT Representative shall be responsible for approving the final configuration of all equipment supplied as part of this specification.

C. Provide all system documentation and submittals.

D. Provide warranty and maintenance support as specified.

E. Provide all calculations and/or analysis to support design and engineering decisions as specified in Submittals.

F. Provide and pay for all labor, materials, and equipment. Pay required sales, gross receipts, and other taxes.

G. Secure and pay for plan check fees, permits, fees, and licenses necessary for execution of Work as applicable for the project.

H. Give required notices.

I. Comply with all codes, ordinances, regulations, and other legal requirements of public authorities that bear on performance of Work.

1.7 QUALITY ASSURANCE

A. Contractor Qualifications:
   1. The contractor must be certified by the manufacturer of the products to be installed adhere to the engineering, installation and testing procedures, and utilize the authorized manufacturer components and distribution channels in provisioning this Project.
   2. All members of the installation team must be certified by the manufacturer(s) as having completed the necessary training to complete their part of the installation.
   3. Contractor shall provide five references for projects of approved equivalent scope, type and complexity of work completed within the last five years.

B. Equipment and materials supplied for the LAN shall be a standard product of manufacturers regularly engaged in the manufacture and installation of information backbone technologies and shall be the manufacturer's latest standard design. Items of the same classification shall be identical. This requirement includes equipment, modules, assemblies, parts, and components. Electrically powered equipment shall be UL approved. Electronic equipment shall meet the requirements of the FCC (Federal Communications Commission) Title CFR 47 Part 15.

C. All hardware, software, firmware, and/or operating system requirements given are the minimum requirements. The Contractor's product shall meet or exceed these requirements. The product selected shall meet the operational, functional, and performance requirements specified herein. Additionally, due to the rapid advancement and antiquation of technology related products, the supplied product shall be the “contemporary technical equivalent” of that specified. “Contemporary technical

equivalent" shall be based on a comparison of technology at the time of publication of specification to the technology at the time of the first product submittal. Final product approval is at the sole discretion of the City.

1.8 MAINTENANCE AND SUPPORT

A. Provide the manufacturer's standard maintenance and support services for all hardware and software associated with this system at no additional charge for a period of not less than three years. It will be the responsibility of the HAS IT Representative to provide the operational maintenance and support of the installed system. Coordination through the City Engineer and the HAS IT Representative shall be required by the installation contractor to ensure that all documentation for the manufacturer's maintenance and support programs are in place.

B. All lead technicians performing installation shall have a minimum of two years experience on the proposed system and be manufacturer certified on all hardware/software applications.

1.9 EXTENDED WARRANTY

A. Provide the manufacturer's warranty for all equipment installed at no additional charge for a period of not less than three years. The warranty shall ensure that the installed equipment will conform to its description and any applicable specifications, and shall be of good quality for the known purpose for which it is intended. The warranty shall allow for replacement or repair at the discretion of the City Engineer and shall include all upgrades for firmware and/or operating systems.

B. Software License
   1. Required software licenses shall be identified and supplied by the Contractor. Licenses shall be "Site Licenses" which shall cover all equipment installed now or in the future.
   2. All software licenses and warranties shall be registered in the name of Houston Airport System.

1.10 PROCUREMENT

A. Procure equipment specified in this document as dictated by the timeline in Appendix B in order to make sure that the technology is acquired in a timely fashion, but not outdated by the installation date.

B. Submit a copy of Appendix B "Technology Implementation Schedule" as a part of the equipment submittals required elsewhere in this document. The Contractor shall complete the columns headed "Quantity", "Procurement Lead Time", "Start Date or Dependent", and "Installation Duration".

C. The "Procurement Lead Time" shall be expressed in days or weeks, and shall include time required for the contractor's personnel to order and receive the material.

Substantiation may be required.

D. "Start Date or Dependent" and "Installation Duration" should be an accurate estimate based upon known facts in the project. Substantiation may be required.

E. The Contractor shall not purchase any materials requiring submittals until the City Engineer approves the submittal for that material and the Technology Implementation Schedule.

F. The Contractor shall not purchase any materials requiring submittals until the date established by the City Engineer as the Purchasing Authorized Date. The Purchasing Authorized Date will be reflected in the "Purch Auth" column of Appendix B as a part of the Submittal Review process.

PART 2 - PRODUCTS

2.1 EQUIPMENT MANUFACTURERS

A. LAN Equipment: Unless otherwise specified, furnish products manufactured by Cisco Systems. Substitutions for specified Cisco Systems components are NOT permitted.

B. Uninterruptible Power Supply (UPS): Eaton or submitted and approved equivalent.

C. Workstations: Reference Specification 272200 – PC, Laptop and Server Equipment.

D. Network Printers: Reference Specification 272200 - PC, Laptop and Server Equipment.

E. Wireless Access Point: Aruba or submitted and approved equivalent.

F. Wireless Access Point Enclosure: American Access Technologies, Inc. or submitted and approved equivalent.

G. For cabinets/racks and cabling infrastructure: Reference Specification 271100 – Cabinets and Equipment Rooms.

2.2 GENERAL LAN REQUIREMENTS

A. The LAN configuration shall be a hierarchical star utilizing centralized core switches that star out to individual edge level devices located throughout the premises in designated areas. Single Mode Fiber Optic Cable (provided in Section 271300) provides the connectivity between all devices. Each edge level device services the HAS communications equipment (Administrative LAN workstations, building management stations, etc.) via UTP Copper Cabling.

B. All LAN equipment shall provide Internet Protocol (IP) switching across all types of

network technologies and topologies, including Ethernet, Fast Ethernet and Gigabit Ethernet.

C. The LAN architecture shall be based on 10 Gbps between the two core networking switches located in the MDF and the edge level networking equipment located in the TR. In addition, the edge level equipment shall be dual homed to the separate core devices where applicable.

D. Each active device shall be accessible from a network, console or auxiliary RS-232 port. A configuration specialist shall be able to enter supervisory mode and change default configurations as appropriate for required operation of special system components.

E. Each active device shall be capable of generating Simple Network Management Protocol (SNMP) or SNMP3 alarms. The device shall be respondent to RMON inquiries from an expert level network management inquirer.

F. All network equipment shall be compliant to physical and operational parameters. The equipment shall be capable of responding to SNMP, SNMP3 and/or RMON network management program calls from the Network Management System.

G. Network equipment shall provide multimedia and multicast support through use of Protocol Independent Multicast (PIM), Internet Group Management Protocol (IGMP).

H. Network equipment shall support full-duplex connectivity on links (10Base-TX, 100Base-TX, 1000Base-TX, 100Base-F/TX, and 1000Base-FX).

I. All fiber interfaces on network switches must support Digital Optical Monitoring (DOM) feature.

J. All network equipment shall be Virtual Local Area Network (VLAN) compatible based on both port and MAC addresses. VLAN assignments shall be configurable from a centralized administrative console.

K. Network equipment shall not require re-configuration of end-station network interface cards or network interface card drivers to accommodate intra-VLAN and inter-VLAN traffic.

L. Network equipment shall support automated VLAN creation and administration capabilities.

M. Network equipment shall support port mirroring. This shall be done by sending frames directly from a specified port to another switch port or from an external network analyzer.

N. Network equipment for use in the main MDF and TRs shall belong to one family of product. The equipment must allow for common sparing of all Interface Processor Modules and all Supervisor Modules.

O. Network equipment shall support Terminal Access Controller Access Control System (TACACS), in order to provide secure port filtering. The equipment must enable individual ports to allow access only to certain workstations.

P. All active LAN devices shall include all software as required for interconnectivity. All active devices shall have fully functional network management options installed.

2.3 LAN MANAGEMENT

A. All networking equipment shall utilize the existing HAS network management platform for administering and troubleshooting the system.

B. Windows 2003 Server Standard and Enterprise Editions with 2 Intel Xeon CPU at 3.66 GHz, 4 GB RAM memory, 8 GB swap space, and 80GB disk space.

C. CiscoWorks LAN Management Solution (LMS) suite 4.0. CiscoWorks Device Fault Manager
   1. CiscoWorks Campus Manager
   2. CiscoWorks Resource Manager Essentials
   3. CiscoWorks Internetwork Performance Monitor
   4. CiscoWorks CiscoView
   5. CiscoWorks Common Services

2.4 LAN HARDWARE REQUIREMENTS

A. All equipment shall be rack mountable in standard 19-inch racks. Contractor is responsible for providing fans, shelves, drawers, special power wiring, ground connections, and adapters of any kind necessary to accommodate the system installation, operation, testing, or maintenance. Contractor shall provide the appropriate factory or custom rack mount adapters for all equipment installed in the equipment rack, whether specifically itemized or not. Contractor shall cover unused slots using blank panels.

B. Fiber and Copper Patch Cords – Adequately sized fiber and copper patch cords shall be provided for each installed port in the LAN under Section 271500, “Horizontal Media Infrastructure.”

C. Core Networking Equipment
   1. The core layer networking equipment shall be located in the MDF as shown in the contract drawings.
   2. The chassis shall accommodate a minimum of nine (9) interface modules and provide connectivity to mixed network topologies. The use of a chassis is to support networking topologies without the use of external bridges or routers. The chassis shall have redundant power supplies, in the form of hot-swappable modules which can equally share the chassis power load. If one power supply fails the system shall notify the network manager and also provide a display on the front of the chassis. The chassis shall support quality of service through

support of IP Precedence, Resource Reservation Protocol (RSVP), and 802.1p.

3. The switch backplane shall provide a minimum of 1440 Gbps switching fabric on the network bus.
4. The chassis shall include modules with a minimum of 24 Gigabit Ethernet (single mode fiber) ports to be connected to distribution layer switches in the Terminal MDFs.
5. The chassis shall support:

    a. Redundant supervisor modules.
    b. Hot swappable line cards.
    c. Layer 2 and Layer 3 IP switching.
    d. Up to 240 10/100/1000 Ethernet ports.
    e. Support broadcast suppression.
    f. Support IGMP snooping and pruning.

6. The core switching equipment shall, at a minimum, a Cisco Catalyst 6509 with the following modules:

    a. Two Supervisor 1440 modules with integrated fabric, Mutlilayer Switching Feature Card 4 (MSFC4) and Policy Feature Card 4 (PFC4).
    b. Fabric-enabled Gigabit Ethernet module(s) with enough SFP ports to support the connectivity requirements for core to core and core to distribution switch uplinks. All SFP ports shall include Long Wavelength / Long Haul (1000Base LX/LH) SFPs (single-mode).
    c. Fabric-enabled, inline power 48-port 10/100/1000Base TX module(s) to provide connectivity for the Layer 3 switch ports
    d. Network Analysis Module.
    e. Intrusion Detection Module.
    f. Firewall Services Module.
    g. Two 6000W AC power supplies.

D. Edge Level Equipment

1. The edge level networking equipment shall be located in the individual TR as shown in the contract drawings unless noted otherwise.
2. The devices shall provide a minimum of 10 Gbps switching fabric.
3. The device shall include a module(s) with the appropriate RJ45 Category 6 UTP 10/100/1000BaseTX ports to support the port requirements shown on the contract drawings. In addition, the device shall have the capability to “stack” with additional devices to increase the available port count.
4. The edge level devices shall have the capability to simultaneously accommodate a minimum of two Gigabit Ethernet uplinks and 24 10/100/1000 VoIP Ethernet ports.
5. The devices shall support the bonding and trunking of Fast Ethernet and Gigabit Ethernet ports.
6. The edge level switching equipment shall be Cisco Catalyst WS-C3750X-24P-S or submitted and owner-approved equivalent. Use 24 port switch if 16 ports or

less are active. Upgrade to the 48 port switch (WS-C3750X-48PF-S) if more than 16 ports are active. The contractor shall provide two (2) SFP LC connector LX/LH transceivers for each Catalyst 3750X series. Also required is the 4 port GbE module that supports (2) two 10Gbs SFP+ ports and (2) 1Gb SFP ports (C3KX-NM-10G).

7. The edge level equipment for industrial environment applications shall be Cisco IE-3000-8TC-E or submitted and owner-approved equivalent. The switch supports 8 copper connections and 2 SFP ports for uplinks. If more than 8 copper ports are needed use Cisco module IEM-30008TM= can be added 8 more copper ports.

2.5 UPS HARDWARE REQUIREMENTS

A. If a room wide UPS is not installed provide a rack-mounted UPS in equipment cabinet in the Telecommunications Room that houses LAN equipment. The UPS shall have an output capacity of 5KVA (3750 Watts). All remaining TRs shall be supported by a UPS as well. Unit must have enough batteries to keep all equipment attached to the unit running for minimum of one (1) hour. If specified UPS cannot be installed due to space restraints a smaller UPS (Eaton 5PX1500RTN) can be substituted if submitted and owner-approved prior to installation, runtime requirements and environmental probe are still required.

B. The UPS interface port shall have an RS-232 communications port and a 10/100 Base-T Ethernet for LAN management. Include optional environmental probe (Eaton part # 42R4317).

C. The control panel shall have a LED status display for load and battery bar-graphs in addition to replace battery and overload indicators.

D. The Output Connections shall include as a minimum one NEMA L6-30R, two NEMA L6-20R, and eighteen NEMA 5-15R.

E. Input connection shall be nominal 208 V via L6-30P plug.

F. Include software and interface card to provide Web/SNMP management through 10/100Base-T Ethernet port. Management software shall include the following attributes:
   1. Shall allow complete configuration of the UPS devices from a remote location
   2. Shall provide periodic UPS self-tests
   3. Shall provide full control over UPS transfer settings
   4. Shall provide user name and password security
   5. Shall log all power events with a description

G. UPS shall be Eaton 9PX5KTF5 5000VA RM 5U 208V series with Web / SNMP Management Card for Ethernet and optional environmental probe, or submitted and owner-approved equivalent.

2.6 WIRELESS ACCESS POINT

A. General: One 802.11ac Wireless Access Point shall be installed per the Drawings.

B. INDOOR Access Points
   1. AP-220 series specifications
      a. AP-225 and IAP-225
      b. 2.4- GHz (600 Mbps max) and 5-GHz (1.3 Gbps max) radios, each with 3x3 MIMO and three integrated omni-directional downtilt antennas.
   2. AP-224 and IAP-224
      a. 2.4-GHz (600 Mbps max) and 5-GHz (1.3 Gbps max) radios, each with 3x3 MIMO and three combined, diplexed external antenna connectors.

C. Wireless radio specifications
   1. AP type: Indoor, dual radio, 5 GHz 802.11ac and 2.4 GHz 802.11n
      a. In addition to 802.11n data rates, the 2.4-GHz radio supports 802.11ac data rates using 256-QAM modulation. This gives TurboQAM-enabled clients a 33% boost above the maximum supported data rate.
   2. Software-configurable dual radio supports 5 GHz and 2.4 GHz
   3. 3x3 MIMO with three spatial streams and up to 1.3 Gbps wireless data rate
   4. Supported frequency bands:
      a. 2.4000 GHz to 2.4835 GHz
      a. 5.150 GHz to 5.250 GHz
      b. 5.250 GHz to 5.350 GHz
      c. 5.470 GHz to 5.725 GHz
      d. 5.725 GHz to 5.850 GHz
   5. Available channels: Dependent upon configured regulatory domain
   6. Dynamic frequency selection (DFS) optimizes the use of available RF spectrum
   7. Supported radio technologies:
      a. 802.11b: Direct-sequence spread-spectrum (DSSS)
      b. 802.11a/g/n/ac: Orthogonal frequency-division multiplexing (OFDM)
      c. 802.11n/ac: 3x3 MIMO with up to three spatial streams
   8. Supported modulation types:
      a. 802.11b: BPSK, QPSK, CCK
      b. 802.11a/g/n: BPSK, QPSK, 16-QAM, 64-QAM
      c. 802.11ac: BPSK, QPSK, 16-QAM, 64-QAM, 256-QAM
   9. Transmit power: Configurable in increments of 0.5 dBm
   10. Maximum (aggregate, conducted total) transmit power (limited by local regulatory requirements):
      a. 2.4-GHz band: +23 dBm (18 dBm per chain)
      b. 5-GHz bands: +23 dBm (18 dBm per chain)

11. Advanced cellular coexistence (ACC) feature to effectively deal with interference from cellular systems
12. Maximum ratio combining (MRC) for improved receiver performance
13. Cyclic delay diversity (CDD) for improved downlink RF performance
14. Short guard interval for 20-MHz, 40-MHz and 80-MHz channels
15. Space-time block coding (STBC) for increased range and improved reception
16. Low-density parity check (LDPC) for high-efficiency error correction and increased throughput
17. Transmit beam-forming (TxBF) for increased reliability in signal delivery
18. Supported data rates (Mbps):
    a. 802.11b: 1, 2, 5.5, 11
    b. 802.11a/g: 6, 9, 12, 18, 24, 36, 48, 54
    c. 802.11n: 6.5 to 450 (MCS0 to MCS23)
    d. 802.11ac: 6.5 to 1,300 (MCS0 to MCS9, NSS = 1 to 3)
19. 802.11n high-throughput (HT) support: HT 20/40
20. 802.11ac very high throughput (VHT) support: VHT 20/40/80
21. 802.11n/ac packet aggregation: A-MPDU, A-MSDU

D. Power

1. Maximum power consumption: 15 watts, plus up to 2.5 watts for attached USB device.
2. Power sources sold separately
3. Direct DC source: 12 Vdc nominal, +/- 5%
4. Power over Ethernet (PoE): 48 Vdc (nominal) 802.3af or 802.3at-compliant source
    a. Efficient mode PoE – power save with 802.3af PoE and limited functionality
        1) USB port disabled
        2) Second Ethernet port disabled
        3) 2.4-GHz 802.11n radio in 1x3:1 spatial-stream mode
        4) 5-GHz 802.11ac radio operates without restrictions*
    b. Unrestricted functionality with 802.3at PoE+
5. *With ArubaOS software 6.3.0, the 5-GHz 802.11ac radio operates in 2x3:2 spatial stream mode when the AP is powered by 802.3af PoE. This restriction has been removed in 6.3.1.

E. Antennas

1. AP-224: Three RP-SMA connectors for external dual-band antennas. Internal loss between radio interface and external antenna connectors (due to diplexing circuitry): 1.5 dB in 2.4 GHz and 3.0 dB in 5 GHz.
2. AP-225: Six integrated down-tilt omni-directional antennas for 3x3 MIMO with maximum antenna gain of 3.5 dBi in 2.4 GHz and 4.5 dBi in 5 GHz. Built-in antennas are optimized for horizontal ceiling mounted orientation of AP-225.

F. Other interfaces

1. Two 10/100/1000BASE-T Ethernet network interfaces (RJ-45)
    a. Auto-sensing link speed and MDI/MDX
    b. Load balancing support to achieve platform throughput greater than 1 Gbps
    c. 802.3az Energy Efficient Ethernet (EEE)
    d. PoE-PD: 48 Vdc 802.3af PoE or 802.3at PoE+
2. DC power interface, accepts 1.7/4.0mm center-positive circular plug with 9.5 mm length.
3. USB 2.0 port (Type A connector)
4. Serial console interface (RJ-45, TTL levels)
5. Visual indicators (LEDs):
    a. Power/system status
    b. Ethernet link status (2x; ENET0, ENET1)
    c. Radio status (2x; RAD0, RAD1)
6. Kensington security slot
7. Reset button

G. Mounting

1. Included with AP:
    a. Mounting brackets (2) for attaching to 9/16-inch or 15/16-inch T-bar drop-tile ceiling
2. Optional mounting kits:
    a. AP-220-MNT-C2: Aruba 220 series AP mount kit contains two ceiling-grid rail adapters for Interlude and Silhouette style rails.
    b. AP-220-MNT-W1: Aruba 220 series AP mount kit contains one flat-surface wall/ceiling mount bracket.
    c. AP-220-MNT-W2: Aruba 220 series AP mount kit contains one flat-surface wall/ceiling secure mount cradle.

H. Mechanical

1. Dimensions/weight (unit, excluding mount accessories):
    a. 203 mm (W) x 203 mm (D) x 54 mm (H), 8.0” (W) x 8.0” (D) x 2.1” (H)
    b. 750 g/27 oz
2. Dimensions/weight (shipping):
    a. 315 mm (W) x 265 mm (D) x 100 mm (H), 12.4” (W) x 10.4” (D) x 3.9” (H)
    b. 1,250 g/44 oz

I. Environmental

1. Operating:

a. Temperature: 0° C to +50° C (+32° F to +122° F)
b. Humidity: 5% to 95% non-condensing

2. Storage and transportation:

a. Temperature: -40° C to +70° C (-40° F to +158° F)

J. Regulatory

1. FCC/Industry of Canada
2. CE Marked
3. R&TTE Directive 1995/5/EC
4. Low Voltage Directive 72/23/EEC
5. EN 300 328
6. EN 301 489
7. EN 301 893
8. UL/IEC/EN 60950

K. Regulatory Model Numbers

1. AP-224 and IAP-224: APIN0224
2. AP-225 and IAP-225: APIN0225

L. Certifications

1. CB Scheme Safety, cTUVus
2. UL2043 plenum rating
3. Wi-Fi Alliance certified 802.11a/b/g/n/ac

M. Warranty

1. Limited lifetime warranty

N. Minimum operating system software versions

1. ArubaOS 6.3.0.0
2. Aruba Instant 4.0.0.0

O. RF Performance Table

P.

	Maximum transmit power (dBm) per transmit chain	Receiver sensitivity (dBm) per receive chain
802.11b 2.4 GHz		
1 Mbps	18.0	-92.0
2 Mbps	18.0	-92.0
5.5 Mbps	18.0	-90.0
11 Mbps	18.0	-88.0
802.11g 2.4 GHz and 802.11a 5 GHz		
6 Mbps	18.0	-88.0
54 Mbps	16.0	-75.0
802.11n HT20 2.4 GHz and 5 GHz		
MCS0/8	18.0	-88.0
MCS7/15	14.0	-71.0
802.11n HT40 2.4 GHz and 5 GHz		
MCS0/8	18.0	-85.0
MCS7/15	14.0	-68.0
802.11ac VHT20 5 GHz		
MCS0	18.0	-88.0
MCS9	12.0	-65.0
802.11ac VHT40 5 GHz		
MCS0	18.0	-85.0
MCS9	12.0	-62.0
802.11ac VHT80 5 GHz		
MCS0	18.0	-82.0
MCS9	12.0	-59.0

Q. Enclosures

1. Wireless Access Points shall be installed in lockable, stainless steel Nema 4 Enclosure when mounted outdoors or in garage spaces.
2. Include back-plate, ground bus-bar, cable management, document holder, pole/wall mount adapters.
3. Provide 120VAC@15A quad receptacle with surge protection per drawings.
4. Enclosure shall be bonded to ground per NEC.
5. All conduit penetrations shall be made to prevent water ingress through the connections.
6. Enclosure size per drawings.

R. Wireless Access Point Ceiling Enclosure

1. The 802.11ac wireless access point shall be installed in a lockable enclosure mounted to the ceiling. The enclosure shall meet the following specifications:
   a. Enclosure shall be Oberon Wireless model # 1075-WA or submitted and owner approved equivalent.
   b. The WAP is installed in such a manner that the antennas, or face of WAP if antennas are integrated, are largely
   c. within the ABS plastic dome; there is little impact on WAP coverage with antennas largely inside dome
   d. Back-box is 16 ga. aluminum; door and bezel are textured, white powder-coated steel; RoHS compliant
   e. Dome is 10” x 10” x 1 ½”; textured white ABS dome (-WA) is UL 94-5VA classified, and clear polycarbonate dome (-CP) is UL 94-5VB classified
   f. Size: Bezel is 15” x 15”, back-box is 12 ¾” x 12 ¾” x 3” deep
   g. Knockouts for AC receptacle, (2) keystone jacks, (2) ¾” trade conduit

connector

h. Maximum weight to be installed inside the unit is 25 lbs.

i. De-rate upper operating temperature limit from +50°C to +40°C when AP in the enclosure

j. Enclosure must be supported by the tile bridges; when installed in the ceiling, enclosure must be supported by the building structure, independent of the suspended ceiling

2.7 OUTDOOR ACCESS POINTS

A. AP-270 series specifications

1. AP-275 and IAP-275
   a. 2.4-GHz and 5-GHz radios, each with 3x3 MIMO and three integrated omni-directional antennas

2. AP-274 and IAP-274
   a. 2.4-GHz and 5-GHz radios, each with 3x3 MIMO and three combined, diplexed external antenna connectors

B. Wireless radio specifications

1. AP type: Outdoor, dual radio, 5-GHz 802.11ac and 2.4-GHz 802.11n
   a. In addition to 802.11n data rates, the 2.4-GHz radio supports 802.11ac 256-QAM modulation. This gives TurboQAMenabled clients a 33% boost to deliver up to 600 Mbps.

2. Supported frequency bands (country-specific restrictions apply):
   a. 2.4000 GHz to 2.4835 GHz
   a. 5.150 GHz to 5.250 GHz
   b. 5.250 GHz to 5.350 GHz
   c. 5.470 GHz to 5.725 GHz
   d. 5.725 GHz to 5.875 GHz

3. Available channels: Dependent upon configured regulatory domain
4. Dynamic frequency selection (DFS) optimizes the use of available RF spectrum
5. Supported radio technologies:
   a. 802.11b: Direct-sequence spread-spectrum (DSSS)
   b. 802.11a/g/n/ac: Orthogonal frequency-division multiplexing (OFDM)
   c. 802.11n/ac: 3x3 MIMO with up to three spatial streams

6. Supported modulation types:
   a. 802.11b: BPSK, QPSK, CCK
   b. 802.11a/g/n: BPSK, QPSK, 16-QAM, 64-QAM, 256-QAM (with TurboQAM clients)
   c. 802.11ac: BPSK, QPSK, 16-QAM, 64-QAM, 256-QAM

7. Transmit power: Configurable in increments of 0.5 dBm
8. Maximum (aggregate, conducted total) transmit power (limited by local regulatory requirements):

a. 2.4-GHz band: +28 dBm (23 dBm per chain)
b. 5-GHz bands: +28 dBm (23 dBm per chain)

9. Advanced cellular coexistence (ACC) feature to minimize interference from cellular systems
10. Maximum ratio combining (MRC) for improved receiver performance
11. Cyclic delay diversity (CDD) for improved downlink RF performance
12. Short guard interval for 20-MHz, 40-MHz and 80-MHz channels
13. Space-time block coding (STBC) for increased range and improved reception
14. Low-density parity check (LDPC) for high-efficiency error correction and increased throughput
15. Explicit transmit beam-forming (TxBF) for increased reliability in signal delivery
16. Supported data rates (Mbps):
    a. 802.11b: 1, 2, 5.5, 11
    b. 802.11a/g: 6, 9, 12, 18, 24, 36, 48, 54
    c. 802.11n: 6.5 to 450 (MCS0 to MCS23, 1 to 3 spatial streams)
    d. 802.11ac: 6.5 to 1,300 (MCS0 to MCS9, 1 to 3 spatial streams
17. 802.11n high-throughput (HT) support: HT 20/40
18. 802.11ac very high throughput (VHT) support: VHT 20/40/80
19. 802.11n/ac packet aggregation: A-MPDU, A-MSDU Power
20. Maximum power consumption: 23 watts
21. Direct AC source: 100-240-Volt AC
22. Power over Ethernet (PoE): 48 Vdc (nominal) 802.3at-compliant source

C. Antennas

1. AP-274: Six N-type female connectors for external antennas
2. AP-275: Six integrated omni-directional antennas for 3x3 MIMO with maximum antenna gain of 5 dBi in 2.4 GHz and 5 dBi in 5 GHz. Built-in antennas are optimized for horizontal mounted orientation of AP-275.

D. Other interfaces

1. One PoE+ PD port 10/100/1000BASE-T Ethernet network interface (RJ-45)
2. One port 10/100/1000BASE-T Ethernet network interface (RJ-45)
3. AC power interface, power cords sold separately
4. Serial console interface (micro USB)
5. Reset button
6. Visual indicator (LED):
    a. Power/system status; automatically disabled after initial operation period

E. Mounting

1. Must be ordered separately
2. Optional mounting kits:
    a. AP-270-MNT-V1: Aruba 270 series AP long mount kit for pole/wall mounting. Reduces impact of obstruction by pole or extends away from corner.
    b. AP-270-MNT-V2: Aruba 270 series AP short mount kit for pole/wall

mounting

F. Mechanical AP-274

1. Dimensions/weight (excluding mount):
   a. 23 cm (W) x 24 cm (D) x 19 cm (H) with aesthetic cover
   b. 9.0” (W) x 9.4” (D) x 7.5” (H)
   c. 2.7 kg/6 lbs
   d. 23 cm (W) x 24 cm (D) x 14 cm (H) without aesthetic cover
   e. 9.0” (W) x 9.4” (D) x 5.5” (H)
   f. 2.4 kg/5.3 lbs

G. Mechanical AP-275

1. Dimensions/weight (excluding mount):
   a. 23 cm (W) x 24 cm (D) x 27 cm (H)
   b. 9.0” (W) x 9.4” (D) x 10.6” (H)
   c. 2.4 kg/5.3 lbs

H. Environmental

1. Operating:
   a. Temperature: -40° C to +65° C (-40° F to +150° F)
   b. Humidity: 5% to 95% non-condensing
2. Storage and transportation:
   a. Temperature: -40° C to +70° C (-40° F to +158° F)
3. Operating Altitude: 3000m
4. Chassis Rating: IP66 and IP67
5. Wind Survivability: Up to 165 mph
6. Shock and Vibration: ETSI 300-19-2-4 spec T41.E 4M3

I. Regulatory

1. FCC/Industry of Canada
2. CE Marked
3. R&TTE Directive 1995/5/EC
4. Low Voltage Directive 72/23/EEC
5. EN 300 328
6. EN 301 489
7. EN 301 893
8. UL/IEC/EN 60950
9. EN 60601-1-1, EN60601-1-2

J. Regulatory Model Numbers

1. AP-274 and IAP-274: APEX0101
2. AP-275 and IAP-275: APEX0100

K. Certifications

1. CB Scheme Safety, cTUVus
2. UL2043 plenum rating
3. Wi-Fi Alliance certified 802.11a/b/g/n/ac

L. Warranty

1. Limited lifetime warranty

M. Minimum operating system software versions

1. ArubaOS 6.4
2. Aruba Instant 4.1 (planned availability mid 2014)

N. RF Performance Table

	Maximum transmit power (dBm) per transmit chain	Receiver sensitivity (dBm) per receive chain
802.11b 2.4 GHz		
1 Mbps	23.0	-92.0
2 Mbps	23.0	-92.0
5.5 Mbps	23.0	-90.0
11 Mbps	23.0	-88.0
802.11g 2.4 GHz and 802.11a 5 GHz		
6 Mbps	23.0	-88.0
54 Mbps	18.0	-75.0
802.11n HT20 2.4 GHz and 5 GHz		
MCS0/8	23.0	-88.0
MCS7/15	17.0	-71.0
802.11n HT40 2.4 GHz and 5 GHz		
MCS0/8	23.0	-85.0
MCS7/15	17.0	-68.0
802.11ac VHT20 5 GHz		
MCS0	23.0	-88.0
MCS9	16.0	-65.0
802.11ac VHT40 5 GHz		
MCS0	23.0	-85.0
MCS9	16.0	-62.0
802.11ac VHT80 5 GHz		
MCS0	23.0	-82.0
MCS9	16.0	-59.0

P. Enclosures

1. Wireless Access Points shall be installed in lockable, stainless steel Nema 4 Enclosure when mounted outdoors or in garage spaces.
2. Include back-plate, ground bus-bar, cable management, document holder, pole/ wall mount adapters.
3. Provide 120VA C@15A quad receptacle with surge protection per drawings.
4. Enclosure shall be bonded to ground per N EC.
5. All conduit penetrations shall be made to prevent water ingress through the connections.
6. Enclosure size per drawings.

Q. Lightning arrestors

1. AP-LAR-1 N-type male to N-type female in-line lightning surge arrestor (2GHz-6GHz). (AP-274 ONLY).

R. Installation materials

1. AINS2KKIT-00 Optional Weather proofing materials: Suggested for antenna end

connections only. (AP-274 ONLY).

S. RF cables for non-direct mount of antenna (optional) (AP-274 ONLY).

1. AP-CBL-1 For remoting omnis or antennas with pigtails
2. ANT-CBL-1 1m Flexible Cable
3. ANT-CBL-2 2m Flexible Cable
4. AFC7DL03-01 3m Low loss cable. AP-LAR-1 recommended
5. AFC7DL04-01 4m Low loss cable. AP-LAR-1 recommended

T. Antenna for Radio 0 (5 GHz) (AP-274 ONLY)

1. ANT-3x3-5005 MIMO, Omni, 5 dBi, 5 GHz, Direct mount to chassis or remoted with N male to N female cable (x3)
2. ANT-3x3-5010 MIMO, Omni, 10 dBi, 5 GHz, Direct mount to chassis or remoted with N male to N female cable (x3)
3. ANT-2x2-5314 MIMO, Sector 30° x 30°, 14 dBi, 5 GHz, Requires N male to N male cables (x2)
4. ANT-3x3-5712 MIMO, Sector 70° x 25°, 12 dBi, 5 GHz, Requires N male to N male cables (x3)
5. ANT-3x3-D608 MIMO, Sector 60°, 2.4/5 GHz, Requires N male to N male cables (x3)
6. ANT-3x3-D905 MIMO, Sector 90°, 2.4/5 GHz, Requires N male to N male cables (x3)

U. Antenna for Radio 1 (2.4 GHz) (AP-274 ONLY)

1. ANT-3x3-2005 MIMO, Omni, 5 dBi, 2.4 GHz, Direct mount to chassis or remoted with N male to N female cable (x3)
2. ANT-2x2-2314 MIMO, Sector 30° x 30°, 14 dBi, 2.4 GHz, Requires N male to N male cables (x2)
3. ANT-2x2-2714 MIMO, Sector 70°, 14 dBi, 2.4 GHz, Requires N male to N male cables (x2)
4. ANT-3x3-D608 MIMO, Sector 60°, 2.4/5 GHz. Requires N male to N male cables (x3)
5. ANT-3x3-D905 MIMO, Sector 90°, 2.4/5 GHz. Requires N male to N male cables (x3)

V. AP mount kit

1. AP-270-MNT-V1 Aruba 270 Series Access Point Long Mount Kit. Pole/Wall Mount for P-270 300 mm from vertical mounting asset.
2. AP-270-MNT-V2 Aruba 270 Series Access Point Short Mount Kit. Pole/Wall Mount for AP-270 75-mm from vertical mounting asset.

W. Ethernet Surge Protection Device (SPD)

1. Use in field for pole and roof mount Access Points. Device shall be rated for outdoor use.

a. Transtector ALPU PTP-M Kit. No exceptions.

2.8 Ethernet and PoE+ Extension Unit

A. The Enable-IT™ 828 Gigabit Ethernet and PoE+ Extension Unit.

2.9 PoE + POWER Injector

A. Enable-IT 360 60W- 56VDC IEEE 802.3AT Gigabit PoE + Injector.

2.10 Mobility controller

A. Aruba Networks

1. Aruba Model 7200 Series Mobility Controllers. Refer to drawings for Qty.

Model Number Aruba 7200 Controller	Number of APs Supported
7210	512

B. Front Panel

1. The front panel of the Aruba 7200 mobility controller contains the following components:

a. Four 10GBase-X (SFP+) ports
b. Two Dual-Media Ports
c. LINK/ACT and Status LEDs
d. Management/Status LED
e. LCD Panel and Navigation Buttons
f. Console Connections - RJ-45 and Mini-USB
g. Expansion Slot (reserved for future use)

C. Physical

1. Device Dimensions (without mounting brackets) (HxWxD)

a. All Models: 1.75” x 17.5” x 17.5”
b. All Models: 4.4 cm x 44.5 cm x 44.5 cm

2. Device Weight (with one AC power supply installed)

a. All Models: 16.43 lbs (7.45 kg)

D. Power Supply Specifications

1. 350W AC Power Supply

a. AC Input Voltage: 100 VAC to 240 VAC
b. AC Input Current: 5-2.5A
c. AC Input Frequency: 50 - 60 Hz
d. Weight: 2.8 lbs (1.3 kg)

E. Operating Specifications

1. Operating Temperature Range: 0°C to 40°C (32°F to 104°F)
2. Operating Humidity Range: 5% to 95% (RH), non-condensing

F. Package Checklist

1. Inform your supplier if there are any incorrect, missing, or damaged parts. If possible, retain the carton, including the original packing materials (see Table). Use these materials to repack and return the unit to the supplier if needed.

Item	Quantity
Aruba 7200 Series Controller	1
Power Supply Unit - Installed	1
Fan Tray - Installed	1
Expansion Slot Cover - Installed	1
Blank Panel over unpopulated PSU Intake - Installed	1
Rack Mounting Brackets	2
M6 x 15mm Rack Mounting Screws	4
M4 x 6mm Rack Mount Bracket Screws	8
USB Console Cable	1
Power Cable	1
Aruba 7200 Series Installation Guide (Printed)	1
End User License Agreement (Printed)	1
Aruba Document Pointer (Printed)	1

2.11 ClearPass Policy Manager

A. ClearPass Policy Manager-5000. Refer to drawings for Qty.

1. Aruba ClearPass Policy Manager 5K hardware platform supporting a maximum of 5,000 authenticated devices.
2. Appliance Specifications:
   a. CPU - (1) Quad Core Xeon
   b. Memory - 8 GB
3. Hard drive storage:
   a. (2) 3.5” SATA (7.2K RPM) 500GB hard drives, RAID-1 controller
4. Appliance Scalability:
   a. Maximum devices - 5,000
5. Form Factor:
   a. Dimensions (W x H x D) - 17.53” x 1.7” x 16.8”
   b. Weight (max config) - 18 Lbs

6. Power:
    a. Power consumption (maximum) - 250 watts max
    b. Power supply - Single
    c. AC input voltage - 110/220 VAC auto-selecting
    d. AC input frequency - 50/60 Hz auto-selecting

2.12 LAN PERFORMANCE REQUIREMENTS

A. The wired system shall perform as designed providing a minimum of 10/100/1000 Mbps to each end user device and 1Gbps from edge switch to core switch on the backbone.

PART 3 - EXECUTION

3.1 INSTALLATION

A. Install components in accordance with contract drawings, manufacturer's instructions and approved submittal data.

B. System installation and construction methods shall conform to the requirements of the Federal Communications Commission.

C. The Contractor shall install all system components including furnished equipment, and appurtenances in accordance with the manufacturer's instructions, and adjustments required for a complete and operable system.

D. Grounding shall be installed as necessary to preclude ground loops, noise, and surges from adversely affecting system operation.

E. The HAS IT Representative shall perform final configuration of the network equipment. This includes, but is not limited to: VLAN configuration, IP addressing schemas, final port assignments, and trunking/bonding configurations. Installation contractor shall ensure that the proper documentation is provided to assist in the final system configuration.

F. The Contractor shall coordinate with the cabling contractor with the installation if the iPatch/imVision crossconnect panel to create a true cross-connect per iPatch/imVision standards.

3.2 PRODUCT HANDLING

A. The Contractor shall be responsible for any and all loss or damage in the shipment and delivery of all material until transfer of title to the City.

3.3 HARDWARE INSTALLATION

A. The Contractor shall obtain written permission from the City Engineer before proceeding with any work which requires cutting into or through any part of the building structures such as, but not limited to, girders, beams, concrete, carpeted or tiledfloors, partitions or ceilings. The Contractor shall also consult with the City Engineer before cutting into or through any part of the building structures where fireproofing or moisture proofing could be impaired.

B. The Contractor shall take all steps necessary to ensure that all public areas remain clear or are properly marked during installation or maintenance.

C. The Contractor shall develop a detailed network map to be utilized as a road map during the implementation of the LAN. This map shall show all segments, all interconnects between segments and all active network devices. This network map shall not include the individual nodes interconnected to each concentrator, but will have the modules, interfaces, protocols, addresses and other identifying features for each concentrator and other active device.

D. The Contractor shall also develop a Cable Plant interconnectivity chart showing all fiber patch panels and individual identifiers for each fiber associated with the interconnectivity of each network device.

E. Prior to installing Wireless Access Points, conduct and document an RF site survey to determine the maximum operating range between an AP (fixed location) and mobile stations for a specified transmit power level. Survey shall also identify holes of coverage due to multi-path, interference sources, and interference from other wireless installations.

F. The contractor shall place materials only in those locations that have been previously approved. The City Engineer shall approve any other locations, in writing.

3.4 SYSTEM STARTUP

A. The Contractor shall not apply power to the system until after:
   1. System and components have been installed and inspected in accordance with the manufacturer's installation instructions.
   2. A visual inspection of the system components has been conducted to ensure that defective equipment items have not been installed and that there are no loose connections.
   3. System wiring has been tested and verified as correctly connected as indicated.
   4. All system grounding and transient protection systems have been verified as properly installed and connected, as indicated.
   5. The City Engineer and the HAS IT Representative have approved the installation.

B. Satisfaction of the above requirements shall not relieve the contractor of responsibility for incorrect installations, defective equipment items, or collateral damage as a result of contractor’s deficient work/defective equipment.

3.5 ACCEPTANCE TESTING

A. The contractor shall develop and execute an onsite acceptance-testing program.

B. The plan shall address all requirements identified in this specification and test all contractor supplied cabling and hardware components. The plan shall follow accepted industry testing practices and have a method of independent verification described.

C. Any specified item that does not satisfy the requirements of this specification shall be replaced, upgraded, or added by the contractor as necessary to correct the noted deficiencies. After correction of a noted deficiency, re-testing shall be performed to verify the effectiveness of the corrective action.

3.6 IDENTIFIERS, LABELS AND LABELING SYSTEM

A. All Identification and Labeling shall follow Specification: 270553–Identification and Labeling of Communication Infrastructure. **Any deviation from the specification must be approved by HAS IT prior to installation.**

END OF SECTION

APPENDIX A

LAN Equipment Schedule
(PENDING FINAL DESIGN)

Item	
PMO MDF	
WS-3750X-48P-S	11
GLC-LH-SMD – 1000BASE-LX/LH "long haul" SFP Single- mode	22
TERMINAL X MDF	
WS-X6848-SFP-2T (for 6509)	2
GLC-LH-SMD – 1000BASE-LX/LH "long haul" SFP Single- mode	22

APPENDIX B

TECHNOLOGY IMPLEMENTATION SCHEDULE
(PENDING FINAL DESIGN)

	(from Designer)		(Contractor Submittal)				(Submittal Response)		
	Product Description	Spec. Ref.	Qty.	Procurement Lead Time	Start Date or Dependent	Installation Duration	Submittal Approved	Purch. Auth.	Remarks
1	WS-3750X-24P-S	2.04.D							
2	GLC-LH-SMD – 1000BASE-LX/LH "long haul" SFP Single-mode	2.04.D							
3	WS-X6824-SFP-2T (for 6509)	2.04.C							
4	General Workstation	2.04.G							
5	Network Printer	2.04.H							
6	Cisco Wireless Access Point	2.04.I							
7	Wireless Access Point Enclosure	2.04.J							
8	Cisco 16-port 10 Gigabit Ethernet Copper Module with DFC4 WS-X6816-10T-2T	2.04.E							
9	Cisco 48-port SFP fiber Gigabit Ethernet Module with DFC4 WS-X6848-SFP-2T	2.04.E							
10	Cisco Gigabit Ethernet Module WSX6848-GE-TX	2.04.E							
11		2.04.E							
12	Cisco IOS® Software	2.04.E							
	Release 15.05Y or higher								

SECTION 28 13 00

ACCESS CONTROL SYSTEM

1 - GENERAL

1.01 SUMMARY

A. Provide all required licenses, software and hardware as required to produce complete and operational access control and alarm monitoring functions for the HAS Project Management Office at IAH Airport in Houston, TX.

B. All components listed in this specification may not be required. Exact quantities and components are to be determined from the contract drawings.

1.02 REFERENCES

A. The publications listed below form a part of this specification. The publications are referred to in the text by basic designation only.

B. Specific reference in specifications to codes, rules, regulations, standards, manufacturer's instructions, or requirements of regulatory agencies shall mean the latest printed edition of each in effect at the date of contract unless the document is shown dated.

C. Conflicts.
   1. Between referenced requirements and contract documents: Comply with the one establishing the more stringent requirements.

D. References:
   1. National Electrical Manufacturers Association (NEMA)
   2. American Society for Testing Materials (ASTM)
   3. National Electric Code (NEC)
   4. Institute of Electrical and Electronic Engineers (IEEE)
   5. UL Testing Bulletin

1.03 DEFINITIONS

A. *ANSI* – American National Standards Institute

B. *EIA* – Electronics Industries Alliance

C. *IEEE* – Institute of Electrical and Electronic Engineers

D. *ISO* – International Organization for Standardization

E. *Multi-path* – The possible multiple routes of a single source of RF energy due to reflection, refraction, or diffraction.

F. *NEC* – National Electrical Code

SECURITY SENSITIVE INFORMATION – LAW ENFORCEMENT CONFIDENTIAL. DO NOT PHOTOCOPY.THIS INFORMATION IS PROTECTED AGAINST DISCLOSURE BY THE PROVISIONS CONTAINED IN THE HOMELAND SECURITY ACT OF 2002, 49 U.S.C. 114(s), AND TSA'S REGULATION IMPLEMENTING THIS AUTHORITY, SET FORTH IN 49 CFR PART 1520.

G. *NEMA* – National Electrical Manufacturing Association

H. *UL* – Underwriter's Laboratories

1.04 SUBMITTALS

A. Qualifications: Demonstrate compliance with requirements of Paragraph 1.06 below.

B. Submit manufacturer's technical data for each product provided.

C. Submit HAS provided card reader software programming work sheet for each card reader a minimum of two weeks prior to cut-over of the respective card reader.

D. Submit technical and operations manuals.
   1. Manuals shall describe function, operation, and programmable parameters for each device to be installed.
   2. Manuals shall include required maintenance to be performed.
   3. Manuals shall describe function, operation, and programmable parameters for each card and port for each device to be installed.
   4. Manuals shall include required maintenance to be performed.
   5. Manuals shall be suitable for the training of future personnel, and for use as a reference by currently employed personnel in performing work assignments.

E. As-built documentation. Notes shall be kept during initial installation and shall be made a permanent part of the installation manual pages as required.

F. Provide as-built drawings.

G. For each active device installed, provide a printed configuration including a printout of the device as displayed on the network management system. Printed configuration parameters for each port on the device shall accompany the written report.

1.05 CONTRACTOR'S DUTIES

A. Perform all work, coordination, systems integration, engineering design, and testing, and shall provide all products required in order to ensure a fully operative system and proper installation of equipment. System operability and proper installation shall be verified via completion of the acceptance test plan.

B. Provide all system documentation and submittals.

C. Provide warranty and maintenance support as specified.

D. Provide and pay for all labor, materials, and equipment.

E. Secure and pay for plan check fees, permits, fees, and licenses necessary for execution of Work as applicable for the project.

F. Give required notices.

SECURITY SENSITIVE INFORMATION – LAW ENFORCEMENT CONFIDENTIAL. DO NOT PHOTOCOPY.THIS INFORMATION IS PROTECTED AGAINST DISCLOSURE BY THE PROVISIONS CONTAINED IN THE HOMELAND SECURITY ACT OF 2002, 49 U.S.C. 114(s), AND TSA'S REGULATION IMPLEMENTING THIS AUTHORITY, SET FORTH IN 49 CFR PART 1520.

G. Comply with all codes, ordinances, regulations, and other legal requirements of public authorities that bear on performance of Work.

1.06 QUALITY ASSURANCE

A. Contractor Qualifications:
   1. The contractor must be certified by the manufacturer of the products to be installed, adhere to the engineering, installation and testing procedures, and utilize the authorized manufacturer components and distribution channels in provisioning this Project.
   2. All members of the installation team must be factory certified by the manufacturer(s) as having completed the necessary training to complete their part of the installation. Written confirmation of such certification by manufacturer(s) shall be submitted to the Owner if requested.
   3. Contractor shall provide five references for projects completed within the last five years of approved equivalent scope, type and complexity.

B. Equipment and materials supplied shall be a standard product of manufacturers regularly engaged in the manufacture and installation of access control systems and shall be the manufacturer's latest standard design. Items of the same classification shall be identical. This requirement includes equipment, modules, assemblies, parts, and components. Electrically powered equipment shall be UL approved. Electronic equipment shall meet the requirements of CFR 47 Part 15.

C. All hardware, software, firmware, and/or operating system requirements given are the minimum requirements. The Contractor's product shall meet or exceed these requirements. The product selected shall meet the operational, functional, and performance requirements specified herein. Additionally, due to the rapid advancement and antiquation of technology related products, the supplied product shall be the "contemporary technical equivalent" of that specified. "Contemporary technical equivalent" shall be based on a comparison of technology at the time of publication of specification to the technology at the time of the first product submittal.

1.07 WARRANTY

A. Warrant all equipment and work for a period of not less than one year following formal notice of substantial completion or commencement of beneficial use. The warranty shall ensure that the installed equipment will conform to its description and any applicable specifications, and shall be of good quality for the known purpose for which it is intended. The warranty shall allow for replacement or repair of defective equipment and shall include all upgrades for firmware and/or operating systems.

B. Software Licenses
   1. Required software licenses shall be identified and supplied by the Contractor.
   2. All software licenses and warranties shall be registered in the name of Houston Airport System.

1.08 PROCUREMENT

SECURITY SENSITIVE INFORMATION – LAW ENFORCEMENT CONFIDENTIAL. DO NOT PHOTOCOPY.THIS INFORMATION IS PROTECTED AGAINST DISCLOSURE BY THE PROVISIONS CONTAINED IN THE HOMELAND SECURITY ACT OF 2002, 49 U.S.C. 114(s), AND TSA'S REGULATION IMPLEMENTING THIS AUTHORITY, SET FORTH IN 49 CFR PART 1520.

A. Procure equipment specified in this document in order to ensure that the technology is acquired in a timely fashion, but not outdated by the installation date.

B. The Contractor shall not purchase any materials requiring submittals until the Owner approves the submittal for that material and the Technology Implementation Schedule.

C. All products shall be purchased not earlier than 6 months prior to installation.

1.09 DOOR PERMITTING

A. Contractor is responsible for submitting permit drawings for approval by the City of Houston permitting office.

B. Contractor is responsible for coordinating the final inspection with the City of Houston permitting office.

C. Contractor is responsible for all fees and materials required for door permitting.

D. Contractor shall notify Engineer if door configuration is not code compliant.

2 - PRODUCTS

1.01 MATERIALS AND EQUIPMENT

A. All products shall be procured not earlier than 6 months prior to installation as required to ensure delivery of current technology. Contractor shall warrant that all products will be supported by the contractor and manufacturer for a minimum of two years following acceptance by the Owner.

B. Unless otherwise noted, all materials and equipment shall be new, of the type, capacity, and quality specified and free from defects. Material shall bear the label of, or be listed by the Underwriters' Laboratories (U.L.) unless of a type for which label or listing service is not provided.

C. All equipment listed in this specification may not be required. It is the Contractors responsibility to determine exact equipment and quantities from the contract drawings.

D. For compatibility and ease of installation, materials shall be of same brand or manufacturer throughout for each class of material or equipment, wherever possible.

E. All enclosures for all equipment shall be of metal throughout the system unless noted otherwise.

2.02 INTELLIGENT FIELD PANELS (IFP's): The Intelligent Field Panel shall be connected to the security host, by means of a TCP/IP network. It shall respond to commands from the host. Each IFP shall connect into the TCP/IP network through an Ethernet HUB. The IFP shall forward to the host information regarding access, status and alarms, which the IFP has gathered from the readers and sensor devices that the IFP controls. The IFP shall meet or

SECURITY SENSITIVE INFORMATION – LAW ENFORCEMENT CONFIDENTIAL. DO NOT PHOTOCOPY.THIS INFORMATION IS PROTECTED AGAINST DISCLOSURE BY THE PROVISIONS CONTAINED IN THE HOMELAND SECURITY ACT OF 2002, 49 U.S.C. 114(s), AND TSA'S REGULATION IMPLEMENTING THIS AUTHORITY, SET FORTH IN 49 CFR PART 1520.

exceed the following functional requirements: Each IFP shall be identifiable from the central host by means of a unique IP address. IFPs and associated modules and components shall be manufactured by Honeywell, no substitution.

A. The IFP shall operate normally as an online device.

B. In its offline mode, the IFP shall be able to save (buffer) 35,000 badge transactions.

C. When the IFP returns to online mode from its stand-alone (offline) mode of operation, the transactions it stored shall be transmitted to the host during the subsequent polling sequences. Such transmission shall not impede current transaction processing. Historical activity must be differentiated from current activity.

D. Any portal controlled by the IFP shall be capable of being opened or closed by the issuance of a command from the host.

E. Each IFP shall be capable of supporting up to 32 card readers for badge access.

F. The IFP shall support readers, which utilize HAS compatible smart card technology.

G. Time shall be generated locally at each IFP, and the local time shall be capable of being updated for accuracy from a host master clock at anytime.

H. The IFP shall be in current factory production.

I. The IFP shall include power backup in the form of re-chargeable batteries. In the event of an AC power failure, the battery backup shall protect any data or software stored in the memory of the IFP for not less than 1 hour.

J. The IFP shall be installed with capacity to connect one additional card reader for each 3 card readers installed.

K. Operation from 2 to +43 degrees Celsius, at up to 85% non-condensing relative humidity.

L. Provide each IFP with an enclosure. Enclosures shall be rack mounted if it is determined that this configuration would result in a more reliable, simple to service, and less costly system. Remote mounting of these devices is also approved. Provide each enclosure with an integral tamper alarm switch.

M. The IFP shall be capable of maintaining a database of badge holders, badge holder PINs (user definable) and their privileges. During degrade mode, the IFP will continue to grant appropriate accesses for individuals based on this database and shall not degrade the access selection rules. IFPs are to be capable of maintaining at least 100,000 badge holders.

N. The IFP shall communicate via an Ethernet TCP/IP or RS232 communication data interface.

O. Provide the intelligent controller with an Ethernet daughter board, a 3MB memory expansion module and a daisy-chain harness.

SECURITY SENSITIVE INFORMATION – LAW ENFORCEMENT CONFIDENTIAL. DO NOT PHOTOCOPY.THIS INFORMATION IS PROTECTED AGAINST DISCLOSURE BY THE PROVISIONS CONTAINED IN THE HOMELAND SECURITY ACT OF 2002, 49 U.S.C. 114(s), AND TSA'S REGULATION IMPLEMENTING THIS AUTHORITY, SET FORTH IN 49 CFR PART 1520.

P. Component models:
   1. Intelligent Field Panels PW6K1IC
   2. Enclosure PW5K1ENC2
   3. Enclosure power supply PWHE2PS
   4. Dual Reader Module PW6K1R2
   5. Input Module PW6K1IN
   6. Output relay Module PW6K1OUT
   7. Ethernet Daughter Board PW5K1EN
   8. 3MB memory Expansion PW5K1M4
   9. Daisy-chain harness PW5K1DCC

2.03 CARD READERS: Provide iCLASS *Elite* Contactless Smart Card readers, NO EXCEPTIONS, as shown on the drawings. Card readers shall be "single-package" type, combining controller, electronics and antenna in one package, in the following configurations:

A. R40 - Contactless Smart Card Reader, Wall Mounting (Single-Gang Mounting Applications):
   1. Provide “single-gang” mounting style contactless smart card readers for wall mounting, vehicle stanchions and pedestals, and where shown on plans.
   2. The reader shall be of potted, polycarbonate material, sealed to a NEMA rating of 4X (IP65).
   3. The reader shall contain an integral magnet for use with an external magnetic reed switch to provide tamper protection when connected to an external alarm system.
   4. The reader shall be UL/C 294 listed, and shall be FCC and CE certified, and shall conform to the following ISO Standards: 15693 (read-only), 14443A (CSN read-only), and 14443B2 (read-only).
   5. Transmit Frequency: 13.56 MHz
   6. The reader shall have an approximate read range of 1”- 4.5” when used with the compatible access card.
   7. The reader shall require that a card, once read, must be removed from the RF field for one second before it will be read again, to prevent multiple reads from a single card presentation and anti-passback errors.
   8. The reader shall be capable of reading access control data from any iCLASS contactless smart card or equivalent, and transmitting that data in SIA standard Wiegand format.
   9. The reader shall be capable of reading the CSN (card serial number – a permanent, unique identification number) from any MIFARE® card using the S50 chip or equivalent, and transmitting that data in SIA standard Wiegand format.
   10. The reader shall have a Wiegand output port and shall operate under internal control for read-only access control applications.
   11. The reader shall have separate terminal control points for the green and red LED’s, and for the audible indicator.
   12. The reader shall have multiple LEDs for increased visibility.
   13. The reader shall have an audio transducer capable of providing unique tone sequences for various status conditions.

SECURITY SENSITIVE INFORMATION – LAW ENFORCEMENT CONFIDENTIAL. DO NOT PHOTOCOPY.THIS INFORMATION IS PROTECTED AGAINST DISCLOSURE BY THE PROVISIONS CONTAINED IN THE HOMELAND SECURITY ACT OF 2002, 49 U.S.C. 114(s), AND TSA’S REGULATION IMPLEMENTING THIS AUTHORITY, SET FORTH IN 49 CFR PART 1520.

14. The reader shall have a configurable hold input, which when asserted shall either buffer a single card read or disable the reader, until the line is released. This input may be used for special applications or with loop detectors.
15. Access control data shall be protected using 64-bit diversified security keys, encrypted RF data transmission, and mutual authentication using a proprietary symmetrical key-based algorithm.
16. Security keys in the cards and readers shall be required to match, and may be customized for individual sites by using the iCLASS CP400 Access Credential Encoder (or equivalent) or by special order from the factory.
17. The reader shall have flash memory to allow future feature enhancements to be added in the field.
18. The reader shall have a lifetime warranty against defects in materials and workmanship.
19. Color shall be black.
20. HID R40, no substitutions.

B. R10 - Contactless Smart Card Reader, Special Mounting (applications with a minimum of mounting space) Provide "surface" mounting style contactless smart card readers for door mullions, special minimum-space mounting configurations, and where shown on plans.
1. The reader shall be of potted, polycarbonate material, sealed to a NEMA rating of 4X (IP65).
2. The reader shall be UL/C 294 listed, and shall be FCC and CE certified, and shall conform to the following ISO Standards: 15693 (read-only), 14443A (CSN read-only), and 14443B2 (read-only).
3. Transmit Frequency: 13.56 MHz
4. The reader shall have an approximate read range of 1"- 3" when used with the compatible access card.
5. The reader shall require that a card, once read, must be removed from the RF field for one second before it will be read again, to prevent multiple reads from a single card presentation and anti-passback errors.
6. The reader shall be capable of reading access control data from any iCLASS contactless smart card or equivalent, and transmitting that data in SIA standard Wiegand format.
7. The reader shall be capable of reading the CSN (card serial number – a permanent, unique identification number) from any MIFARE® card using the S50 chip or equivalent, and transmitting that data in SIA standard Wiegand format.
8. The reader shall have a Wiegand output port and shall operate under internal control for read-only access control applications.
9. The reader shall have separate terminal control points for the green and red LED's, and for the audible indicator.
10. The reader shall have multiple LEDs for increased visibility.
11. The reader shall have an audio transducer capable of providing unique tone sequences for various status conditions.
12. The reader shall have a configurable hold input, which when asserted shall either buffer a single card read or disable the reader, until the line is released. This input may be used for special applications or with loop detectors.

SECURITY SENSITIVE INFORMATION – LAW ENFORCEMENT CONFIDENTIAL. DO NOT PHOTOCOPY.THIS INFORMATION IS PROTECTED AGAINST DISCLOSURE BY THE PROVISIONS CONTAINED IN THE HOMELAND SECURITY ACT OF 2002, 49 U.S.C. 114(s), AND TSA'S REGULATION IMPLEMENTING THIS AUTHORITY, SET FORTH IN 49 CFR PART 1520.

13. Access control data shall be protected using 64-bit diversified security keys, encrypted RF data transmission, and mutual authentication using a proprietary symmetrical key-based algorithm.
14. Security keys in the cards and readers shall be required to match, and may be customized for individual sites by using the iCLASS CP400 Access Credential Encoder (or equivalent) or by special order from the factory.
15. The reader shall have flash memory to allow future feature enhancements to be added in the field.
16. The reader shall have a lifetime warranty against defects in materials and workmanship.
17. Color shall be black.
18. HID R10, no substitutions.

C. RK40 - Contactless Smart Card Reader with Keypad, Wall Mounting (Single-Gang Mounting Applications) Provide "single-gang" mounting style contactless smart card readers for wall mounting, Vehicle Stanchions and Pedestals, and where shown on plans.
1. The reader shall be of potted, polycarbonate material, sealed to a NEMA rating of 4X (IP65).
2. The reader shall contain an integral magnet for use with an external magnetic reed switch to provide tamper protection when connected to an external alarm system.
3. The reader shall be UL/C 294 listed, and shall be FCC and CE certified, and shall conform to the following ISO Standards: 15693, 14443A (CSN read-only), 14443B1 (read-only), and 14443B2.
4. Transmit Frequency: 13.56 MHz
5. The reader shall have an approximate read range of 1"- 4.5" when used with the compatible access card.
6. The reader shall require that a card, once read, must be removed from the RF field for one second before it will be read again, to prevent multiple reads from a single card presentation and anti-passback errors.
7. The reader shall be capable of reading access control data from any iCLASS contactless smart card or equivalent, and transmitting that data in SIA standard Wiegand format.
8. The reader shall be capable of reading the CSN (card serial number – a permanent, unique identification number) from any MIFARE® card using the S50 chip or equivalent, and transmitting that data in SIA standard Wiegand format.
9. The reader shall have a Wiegand output port and shall operate under internal control for read-only access control applications.
10. The reader shall have separate terminal control points for the green and red LED's, and for the audible indicator.
11. The reader shall have multiple LEDs for increased visibility.
12. The reader shall have a 12-position keypad, with metal keycaps, and backlighted numbers located above each key.
13. The reader keypad shall be rugged, waterproof and backlit, and impervious to liquid spills, dirt, and water spray from any direction.
14. The reader shall be configurable so that keypad data may be sent as individual keystrokes or buffered and formatted in a card data format, as required by the Host System.

SECURITY SENSITIVE INFORMATION – LAW ENFORCEMENT CONFIDENTIAL. DO NOT PHOTOCOPY.THIS INFORMATION IS PROTECTED AGAINST DISCLOSURE BY THE PROVISIONS CONTAINED IN THE HOMELAND SECURITY ACT OF 2002, 49 U.S.C. 114(s), AND TSA'S REGULATION IMPLEMENTING THIS AUTHORITY, SET FORTH IN 49 CFR PART 1520.

15. The reader shall allow users to enter a PIN code as a primary, secondary or alternate means of identification, based on configuration of the Host System.
16. The reader shall optionally be configurable to verify the user's PIN entry locally, based on a comparison with PIN data stored on the user's card, transmitting Wiegand data to the host only if the PIN code is valid.
17. The reader keypad shall have keys of sufficient size and with sufficient separation such that users wearing gloves can easily press the individual keys.
18. The reader keypad shall work in conjunction with the audio transducer, such that each keypress shall produce a click or beep signifying that the keypress was received by the microprocessor.
19. The reader keypad should have definite tactile "snap" when depressed, giving the user confirmation that the key was pressed correctly.
20. The reader shall have an audio transducer capable of providing unique tone sequences for various status conditions.
21. The reader shall have a configurable hold input, which when asserted shall either buffer a single card read or disable the reader, until the line is released. This input may be used for special applications or with loop detectors.
22. Access control data shall be protected using 64-bit diversified security keys, encrypted RF data transmission, and mutual authentication using a proprietary symmetrical key-based algorithm.
23. Security keys in the cards and readers shall be required to match, and may be customized for individual sites by using the iCLASS Card Programmer (or equivalent) or by special order from the factory.
24. The reader shall have flash memory to allow future feature enhancements to be added in the field.
25. The reader shall have a lifetime warranty against defects in materials and workmanship.
26. Color shall be selected by the Architect: gray, black or white.
27. HID RK40, no substitutions.

1.04 DOOR POSITION SWITCHES

A. Recessed Door Position Switch
1. Construction - totally encapsulated brushed housing.
2. Life Expectancy - Greater than 10,000,000 cycles.
3. Gap distance - 5/8" or greater for contacts on pedestrian doors; 2" or greater for overhead doors.
4. UL listing - UL listed 634 for use with security systems.
5. The door position switch shall be recessed, normally closed, with a wide gap.
6. Sentrol 1078W or owner approved equivalent substitute.

B. Overhead Door Position Switch
1. Construction: Aluminum
2. Contact Configuration: N.O, SPDT
3. Environmental Specifications: Hermetically Sealed Reed Switch Encapsulated in Polyurethane
4. Lead Type: 3/16 Armored (A) Stainless Steel Cable with Wire Leads
5. Sentrol 2200 Series or owner approved equivalent substitute.

SECURITY SENSITIVE INFORMATION – LAW ENFORCEMENT CONFIDENTIAL. DO NOT PHOTOCOPY.THIS INFORMATION IS PROTECTED AGAINST DISCLOSURE BY THE PROVISIONS CONTAINED IN THE HOMELAND SECURITY ACT OF 2002, 49 U.S.C. 114(s), AND TSA'S REGULATION IMPLEMENTING THIS AUTHORITY, SET FORTH IN 49 CFR PART 1520.

C. Surface Mounted Door Position Switch
   1. Construction: Aluminum
   2. Electrical Configuration: SPDT
   3. Lead Type: 3' 3/16" Armored Cable
   4. Sentrol 2500 Series or owner approved equivalent substitute

1.05 ELECTRIC LOCKS

1. Refer to Door Hardware Specification Section 087011

1.06 LOCK POWER SUPPLIES

A. Rack Mounted Power Supply: Provide 24VDC power supply
   1. 12 amp @ 12VDC and/or 24VDC output.
   2. 2.0 amp max. current per output.
   3. Sixteen (16) fuse protected non-power limited outputs.
   4. 115VAC 50/60Hz. Input Normally closed [NC] or normally open [NO] dry contact inputs (switch selectable).
   5. Individually selectable, Mag Lock/Strike (Fail-Safe, Fail-Secure) solid state fuse protected power outputs.
   6. Fire Alarm disconnect (latching with reset or non-latching) is individually selectable for any or all of the outputs.
   7. Fire Alarm disconnect input options:
      a. Normally open [NO] or normally closed [NC] dry contact input.
      b. Polarity reversal input from FACP signaling circuit.
   8. Remote reset capability for latching Fire Alarm Interface mode
   9. Filtered and electronically regulated outputs.
   10. Short circuit and thermal overload protection.
   11. Removable terminal blocks with locking screw flange.
   12. 3-wire line cord.
   13. Illuminated master power switch.
   14. Built-in charger for sealed lead acid or gel type batteries.
   15. Zero voltage drop upon transfer to battery backup.
   16. Automatic switch over to stand-by battery when AC fails.
   17. AC fail, low battery and battery presence supervision.
   18. Individual output status LEDs located on the front panel.
   19. Lifetime warranty
   20. Modular 2U standard EIA 19" rack mount chassis.
   21. Dimensions: 3.25"H x 19.125"W x 8.5"D.
   22. Allow 1/2U space on top and bottom of the unit for ventilation.
   23. AlarmSaf or owner approved equivalent substitute.

1.07 REQUEST-TO-EXIT DEVICE:

A. UL listed

SECURITY SENSITIVE INFORMATION – LAW ENFORCEMENT CONFIDENTIAL. DO NOT PHOTOCOPY.THIS INFORMATION IS PROTECTED AGAINST DISCLOSURE BY THE PROVISIONS CONTAINED IN THE HOMELAND SECURITY ACT OF 2002, 49 U.S.C. 114(s), AND TSA'S REGULATION IMPLEMENTING THIS AUTHORITY, SET FORTH IN 49 CFR PART 1520.

B. Complies with current City of Houston Building Codes.

C. 2 5/8" Red Mushroom Button mounted to single gang backbox

D. Momentary DPST switch contacts

E. Security Door Controls 440 Series or approved equivalent

1.08 DURESS ALARM SWITCH (For use at passenger screening checkpoint and at reception desks)

A. SPDT switch in surface mounted plastic housing

B. Switch remains activated until reset with key

C. Activation of button enables alarm and triggers an event for cameras in the immediate area

D. Ademco Model 268 or approved equivalent

1.09 DURESS ALARM BUTTON (Interview and hold rooms)

A. Red Mushroom Button mounted to single gang backbox

B. Switch remains activated until reset with key

C. Activation of button enables alarm, turns on associated Red LED Duress Alarm Light and triggers an event for cameras in the immediate area.

D. Security Door Controls Model 432KUR or approved equivalent

1.010 DURESS ALARM LIGHT (Interview and hold rooms)

A. 24 V DC Red LED

B. Tied to the activation of the associated Duress Alarm Button

C. Federal Signal LP2-024R or approved equivalent

1.011 COMPOSITE SECURITY CABLE: Cable between controlled portals and IFPs shall consist of multiple conductor bundles affixed together via a central spline. The conductor bundles shall consist of the following:

A. 4C, 18 AWG 16/30 STR, shielded

B. 3P, 22 AWG 7/30 STR, shielded

C. 2C, 22A AWG 7/30 STR, shielded

SECURITY SENSITIVE INFORMATION – LAW ENFORCEMENT CONFIDENTIAL. DO NOT PHOTOCOPY.THIS INFORMATION IS PROTECTED AGAINST DISCLOSURE BY THE PROVISIONS CONTAINED IN THE HOMELAND SECURITY ACT OF 2002, 49 U.S.C. 114(s), AND TSA'S REGULATION IMPLEMENTING THIS AUTHORITY, SET FORTH IN 49 CFR PART 1520.

D. 4C, 22 AWG 7/30 STR, shielded

E. The composite access control cable shall be Genesis 3295 or approved equivalent for cables up to 150 feet in length.
   1. Cables between controlled portals and IFPs with lengths from 150 to 240 feet shall include an additional one (1) 16 AWG 2/C Shielded CMP-CL2P, Genesis 3225 by contractor used for lock power.
   2. Cables between controlled portals and IFPs between 240' and 400' shall include an additional (1) 12 AWG 2/C STR Shielded CMP-CL2P Genesis 3225 by contractor.

3 EXECUTION

1.01 INSTALLATION

A. Install components in accordance with contract drawings, manufacturer's instructions and approved submittal data.

B. System installation and construction methods shall conform to the requirements of the Federal Communications Commission.

C. Install all system components including furnished equipment, and appurtenances in accordance with the manufacturer's instructions, and adjustments required for a complete and operable system.

D. Grounding shall be installed as necessary to preclude ground loops, noise, and surges from adversely affecting system operation.

E. Coordinate with Owner to obtain inspection and approval of all cable raceway prior to installation of cable.

1.02 PRODUCT HANDLING

A. The Contractor shall be responsible for any and all loss or damage in the shipment and delivery of all material until transfer of title to the City.

1.03 HARDWARE INSTALLATION

A. Unless otherwise specified herein, or shown on the drawings, provide electrified mortise locks, electric strikes or electrified panic hardware. Provide electromagnetic locks only upon receipt of written authorization from owner.

B. Unless otherwise specified herein, or shown on the drawings, provide end-of-line resistor packs at field device (door position switched, tamper switches, duress alarm switches, etc.) contacts as required for continuous supervision of field device cable. Resistor packs shall be located to maximize cable supervision. Resistor packs shall be configured to produce discreet annunciation of open and short conditions.

C. The Contractor shall take all steps necessary to ensure that all public areas remain clear or are properly marked during installation or maintenance.

SECURITY SENSITIVE INFORMATION – LAW ENFORCEMENT CONFIDENTIAL. DO NOT PHOTOCOPY.THIS INFORMATION IS PROTECTED AGAINST DISCLOSURE BY THE PROVISIONS CONTAINED IN THE HOMELAND SECURITY ACT OF 2002, 49 U.S.C. 114(s), AND TSA'S REGULATION IMPLEMENTING THIS AUTHORITY, SET FORTH IN 49 CFR PART 1520.

D. The contractor shall place materials only in those locations that have been previously approved.

1.04 CONFIGURATIONS

A. Definitions of the alarm status signals are:
   1. Authorized Card – Valid card has been presented. Central System logs event and approves unlock.
   2. Undefined Card – A card that is not in the system has been presented (used to detect lost or stolen cards). Central System logs event and disapproves unlock and reports alarm event.
   3. Invalid Area – Card has been presented at a reader that is not a part of the readers assigned to that card. Central System logs event and disapproves unlock and reports alarm event.
   4. Invalid Time Period – Card has been presented at a time that is not defined in the system as a valid time assigned to that card. Central System logs event and disapproves unlock and reports alarm event.
   5. Expired Card – Card that is presented has been programmed to be inactive after a specific date. Central System logs event and disapproves unlock and reports alarm event.
   6. Inactive Card – Card that is programmed in the system as inactive is presented. Central System logs event and disapproves unlock and reports alarm event.
   7. Door Held Open Alarm – A door is held open longer than the programmed time. Alarm event is sent to Central System.
   8. Forced Door Alarm – A door that has been opened without presenting a valid card or PIN code and received an unlock command. Alarm event is sent to Central System.
   9. Door Restore – The door has been closed and condition has returned to normal and event is sent to Central System.

1.05 SYSTEM STARTUP

A. The Contractor shall not apply power to the system until after:
   1. System and components have been installed and inspected in accordance with the manufacturer's installation instructions.
   2. A visual inspection of the system components has been conducted to ensure that defective equipment items have not been installed and that there are no loose connections.
   3. System wiring has been tested and verified as correctly connected as indicated.
   4. All system grounding and transient protection systems have been verified as properly installed and connected, as indicated.
   5. The Owner has approved the installation.

B. Satisfaction of the above requirements shall not relieve the contractor of responsibility for incorrect installations, defective equipment items, or collateral damage as a result of contractor’s deficient work/defective equipment.

1.06 ACCEPTANCE TESTING

SECURITY SENSITIVE INFORMATION – LAW ENFORCEMENT CONFIDENTIAL. DO NOT PHOTOCOPY.THIS INFORMATION IS PROTECTED AGAINST DISCLOSURE BY THE PROVISIONS CONTAINED IN THE HOMELAND SECURITY ACT OF 2002, 49 U.S.C. 114(s), AND TSA’S REGULATION IMPLEMENTING THIS AUTHORITY, SET FORTH IN 49 CFR PART 1520.

A. The contractor shall develop and execute an onsite acceptance-testing program.

B. The plan shall address all requirements identified in this specification and test all contractor supplied cabling and hardware components. The plan shall follow accepted industry testing practices and have a method of independent verification described.

C. Any specified item that does not satisfy the requirements of this specification shall be replaced, upgraded, or added by the contractor as necessary to correct the noted deficiencies. After correction of a noted deficiency, re-testing shall be performed to verify the effectiveness of the corrective action.

1.07 IDENTIFIERS, LABELS AND LABELING SYSTEM

1.08 Label each card reader on the card reader spacer. Label shall be permanently engraved on a lexan back plate. The label shall include the card reader number. Coordinate with HAS for sample.CABLE AND CONDUIT LABELING:

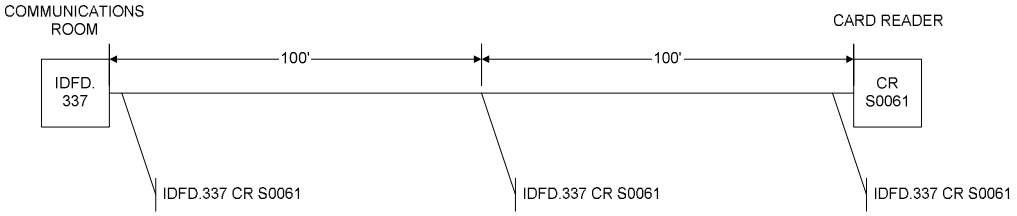

CONDUIT LABELING

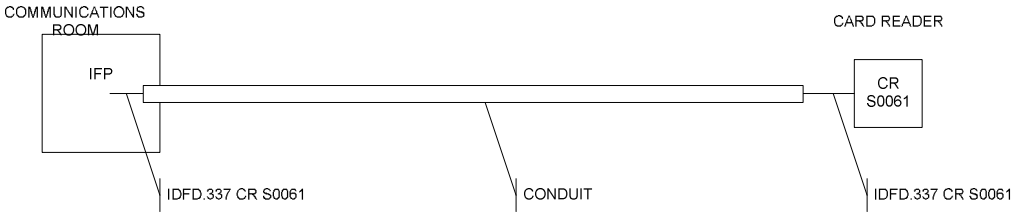

CABLE LABELING

LABEL CABLE INSIDE OF IFP, WHERE IT CONNECTS TO CARD READER, AND WHEN NOT IN CONDUIT

1.09

1.010 RECORD DRAWINGS

A. Site Prints: Maintain a set of clearly marked black-line prints of the Construction Documents at the job site which shall be used for recording the work details, final size, location, interrelation, and similar items of all work under this Division. This set of Construction Documents shall be corrected daily as the work progresses and shall clearly indicate all changes to suit field conditions, changes made by “Field Order” or “Change

SECURITY SENSITIVE INFORMATION – LAW ENFORCEMENT CONFIDENTIAL. DO NOT PHOTOCOPY.THIS INFORMATION IS PROTECTED AGAINST DISCLOSURE BY THE PROVISIONS CONTAINED IN THE HOMELAND SECURITY ACT OF 2002, 49 U.S.C. 114(s), AND TSA’S REGULATION IMPLEMENTING THIS AUTHORITY, SET FORTH IN 49 CFR PART 1520.

Order," accurate dimensions of all buried or concealed work. Precise locations of all concealed work, locations of all concealed boxes, controls and devices and any deviations from the work shall be referenced by at least two permanent structure points.

B. Upon completion of work, incorporate into AutoCAD (Ver. 2010) all marks from site prints and produce two bound sets of draft Record Drawings for use and verification during acceptance testing. The draft Record Drawings shall utilize the latest Architectural background drawings and shall incorporate all modified drawings as outlined in Article 1.04 of this Section, or any other drawings which were developed during the installation process. Any changes to the required Record Drawings as a result of acceptance testing shall be redlined on these sets as required.

C. Upon completion of acceptance testing, incorporate into CAD files (Ver. 2010) all marks from the site prints, including any revisions made to the drawings outlined in Section 1.04 (Submittals) of this Section. Produce one set of clean Record Drawings on vellum and one complete set of Record Drawings burned to CD-ROM.

END OF SECTION

SECURITY SENSITIVE INFORMATION – LAW ENFORCEMENT CONFIDENTIAL. DO NOT PHOTOCOPY.THIS INFORMATION IS PROTECTED AGAINST DISCLOSURE BY THE PROVISIONS CONTAINED IN THE HOMELAND SECURITY ACT OF 2002, 49 U.S.C. 114(s), AND TSA'S REGULATION IMPLEMENTING THIS AUTHORITY, SET FORTH IN 49 CFR PART 1520.

SECTION 28 23 00

VIDEO SURVEILLANCE CONTROL AND MANAGEMENT SYSTEM

PART 1 – GENERAL

1.01 SUMMARY

A. This section includes the performance standards, components, and installation configurations to install new IP Cameras and storage for the new HAS Project Management Office at IAH in Houston, Texas.

B. The Video Surveillance System (VSS) components shall include IP High Definition and IP Megapixel Cameras, MaxPro NVR (NVR) Recording Platform, MaxPro Video Management System (VMS), blade Database Servers, blade Camera Servers, and NVR Video Storage Arrays.

C. Software licensing for the new cameras and new servers shall be included. Provide an additional 5% additional camera licenses for future use. Quantity of 5% refers to 5% of existing plus new cameras.

D. The video monitoring and retrieval components shall be integrated with the Airport's existing Airport Operation Center (AOC). Operators in the AOC along with operators in the Customs and Border Protection Command and Control Center shall have the ability to view and retrieve video from any camera connected to the system, in accordance with these specifications, unless otherwise specified in the Design Drawings. Alarm events on the Access Control System (ACS) shall be integrated with NVR cameras.

1. Provide for adequate time in your proposal to integrate every camera with the Access Control System for Alarm Video Call Up, PTZ Presets, and MaxPro Configuration Arrangements
2. Also include Database Conversion for every new camera as required.
3. Request for additional funding for system integrations after project award will be denied.

E. Provide all labor, materials, equipment, services, etc., necessary to furnish, install, integrate, configure, and commission a complete system to but not limited to:

1. Cameras, housings, lenses, and associated equipment;
2. Video system cabling and conduit;
3. Blade Camera Servers with required software;
4. Video Storage Arrays;
5. Database and Video Management Software
6. Other associated equipment, as defined within this section.

SECURITY SENSITIVE INFORMATION – LAW ENFORCEMENT CONFIDENTIAL. DO NOT PHOTOCOPY.THIS INFORMATION IS PROTECTED AGAINST DISCLOSURE BY THE PROVISIONS CONTAINED IN THE HOMELAND SECURITY ACT OF 2002, 49 U.S.C. 114(s), AND TSA'S REGULATION IMPLEMENTING THIS AUTHORITY, SET FORTH IN 49 CFR PART 1520.

F. All IP Cameras shall conform to the ONVIF or PSIA specification to provide a common protocol for the exchange of information between network video devices including automatic device discovery, video streaming, intelligence metadata and compatibility with the HAS "Honeywell" recording system.

G. These Specifications may include components that are not required. Use drawings to determine the quantities to be installed. Include in the original bid, all equipment, software, cabling, connectors, transformers, relays, etc., whether specified here or not, such that said bid fulfills the intent of these Specifications and renders these systems functional and fully operational.

H. Related Sections:
   1. Section 27 05 26: Telecommunications Grounding and Bonding
   2. Section 27 05 28: Interior Communications Pathways
   3. Section 27 05 43: Exterior Communications Pathways
   4. Section 27 11 00: Communications Cabinets and Equipment Rooms
   5. Section 27 13 00: Communication Media Infrastructure
   6. Section 27 15 00: Horizontal Media Infrastructure

1.02 DESCRIPTION OF WORK

A. Provide all labor, materials, appliances, tools, equipment, facilities, and services necessary for and incidental to performing all operations of this Section, complete, as shown on the Design Drawings or specified herein. Work includes, but is not limited to, the following:

   1. Furnish, install, integrate, configure, and commission;
      a. IP Cameras – New cameras shall utilize Systimax CAT6 network cabling (color green). Cabling shall be routed by conduit (1" min.) to the nearest existing cable tray for termination on the HAS network switch at the associated IDF as indicated on the drawings. Camera power shall be "Power over Ethernet" (POE) provided by an existing or new network switch as indicated on the drawings.
      b. Equipment Cabinet – Provide new equipment cabinet, cable management, and other accessories as required indicated on the drawings and specified in this manual.
      c. Servers – Provide Blade Camera Servers and Database Servers in equipment cabinets in quantities necessary to provide control and storage of the cameras identified the project scope. The server blades will be housed in existing chassises in MDF XXX and MDF XXX. Servers shall include all Operating Systems, Software, and interconnect cabling required for a 100% fully functional System.
      d. Storage Arrays - Provide Storage Arrays in equipment cabinets in quantities necessary to provide all cameras in the project scope with the specified storage criterion defined in this manual. Arrays shall include all Operating Systems, Software, and interconnect cabling required for a 100% fully functional System.

SECURITY SENSITIVE INFORMATION – LAW ENFORCEMENT CONFIDENTIAL. DO NOT PHOTOCOPY.THIS INFORMATION IS PROTECTED AGAINST DISCLOSURE BY THE PROVISIONS CONTAINED IN THE HOMELAND SECURITY ACT OF 2002, 49 U.S.C. 114(s), AND TSA'S REGULATION IMPLEMENTING THIS AUTHORITY, SET FORTH IN 49 CFR PART 1520.

2. Cameras shall be mounted, oriented, and adjusted to provide the best field of vision possible using the least amount of accessory equipment. All camera installations shall be done in such a manner as to maximize aesthetics, equipment, environmental protection, and equipment vulnerability.

3. Unless otherwise specified, the finish and color of all cameras and housings shall be as provided by the manufacturer. Exact installation location for each device may require coordination with the owner.

4. Size server and storage arrays based on the following criterion (Submit server and storage calculations with proposal submission):

   a. Video Display:
      1) Live Viewing @ 15fps
   b. Image Size/Compression:
      1) Standard Definition: (704x480, 4CIF)
      2) High Definition: (1920x1080)
      3) H.264 low compression
   c. Background Recording:
      1) Background recording on ALL cameras 24 hours per day 7 days per week @ 5fps
      2) Retain all background recordings on-line for 30 days (720 hours)
   d. Alarm/Event Recording:
      1) 25 event-activated recordings per camera per day
      2) Event-activated recording rate @ 10fps
      3) 60 seconds of pre-event record; 60 seconds post-event record
      4) Retain all stored video from every camera on-line for 30 days (720 hours)
   e. User-Activated Recording:
      1) 2 user-activated recordings per camera per day. If user activated recordings for the day are unused, they will be banked for future use if required.
      2) User-activated recording rate @ 10fps
      3) 60 seconds of pre-event record; 60 seconds post-event record
      4) Retain all stored video on-line for 30 days (720 hours)

1.03 REFERENCES AND STANDARDS

A. The references and standards listed herein shall be considered part of this specification. Bidder and Contractor shall conform to the following references and standards:

   1. Open Network Video Interface Forum (ONVIF) Ver. 2.10, or latest revision.

   2. Physical Security Interoperability Alliance (PSIA) Ver.1.0, IP Media Device specification, or latest revision.

   3. ANSI/TIA/EIA-250-C-1990 Electrical Performance for Television Transmission Systems, or latest revision.

SECURITY SENSITIVE INFORMATION – LAW ENFORCEMENT CONFIDENTIAL. DO NOT PHOTOCOPY.THIS INFORMATION IS PROTECTED AGAINST DISCLOSURE BY THE PROVISIONS CONTAINED IN THE HOMELAND SECURITY ACT OF 2002, 49 U.S.C. 114(s), AND TSA'S REGULATION IMPLEMENTING THIS AUTHORITY, SET FORTH IN 49 CFR PART 1520.

4. ANSI/ TIA -568-C.0 , Generic Telecommunications Cabling for Customer Premises, or latest revision

5. ANSI/ TIA -568-C.1 Commercial Building Telecommunications Standard, or latest revision

6. ANSI/ TIA -568-C.2 Balanced Twisted-Pair Telecommunications Cabling and Components Standard, or latest revision

7. ANSI/ TIA -568-C.3 Optical Fiber Cabling Components, or latest revision

8. ANSI/ TIA /EIA-569-B Commercial Building Standard for Telecommunications Pathways and Spaces, or latest revision

9. ISO/IEC 11801International Generic Telecommunications Cabling Standards, or latest revision.

10. National Electric Code (NEC), 2011, or latest revision.

11. Institute of Electrical and Electronic Engineers (IEEE), or latest revision.

12. BICSI, Telecommunications Distribution Methods Manual (TDMM), 12th Edition.

13. BICSI, Electronic Safety and Security Design Reference Manual (ESSDRM), 2nd Edition.

B. Conflicts:

1. Between reference requirements and contract documents: Comply with the one establishing the more stringent requirements.

1.04 SUBMITTALS

A. Shop Drawings and Product Data of the following apparatus, giving full fitness and other pertinent facts, shall be submitted and approved before equipment is ordered, built, or installed, including:

1. Manufacturers Data: Submit product literature for each piece of equipment. Literature to include:
   a. Catalog information for all devices and equipment.
   b. ONVIF/PSIA Certificate of Conformity for all IP Video Cameras and Recording Software
   c. Complete wiring (data and low voltage power) point-to-point diagrams for all systems and subsystems devices to be included with Operations and Maintenance (O&M) Manual.
   d. Panel diagrams (elevation view) showing configurations of all control equipment, power supplies, input/output devices.

SECURITY SENSITIVE INFORMATION – LAW ENFORCEMENT CONFIDENTIAL. DO NOT PHOTOCOPY.THIS INFORMATION IS PROTECTED AGAINST DISCLOSURE BY THE PROVISIONS CONTAINED IN THE HOMELAND SECURITY ACT OF 2002, 49 U.S.C. 114(s), AND TSA'S REGULATION IMPLEMENTING THIS AUTHORITY, SET FORTH IN 49 CFR PART 1520.

e. Functional block diagrams showing integrated relationship of all equipment, cabling, and termination points on one drawing.

B. Any work which deviates from the drawings or specifications are considered alternates and must be submitted following section 013323

C. Materials installed or work performed without approval shall be done at the risk of the Contractor and the cost of removal of such material or work which is determined to be unsatisfactory for any reason shall be at the expense of this Contractor.

D. Site Acceptance Test (SAT) Plan

E. Test Equipment Calibration Certificates

F. Test results

G. Spare parts list and quantities

H. Warranty list with equipment make, model, serial number, commission date, warranty start date, and, warranty end date. Also include RMA Procedure and contact information for warranty claims.

I. Schedule of Unit Price Values

1.05 TRAINING

Provide training sessions as follows:

A. Administrator Training – 1 session, 8 hours per session.

B. User Level Training Classes – 3 sessions, 4 hours per session

1.06 UNIT PRICING

A. Reference 004100

PART2 – PRODUCTS

2.01 MATERIALS AND EQUIPMENT

A. All products shall be procured not earlier than 6 months prior to installation as required to ensure delivery of current technology. Contractor shall warrant that all products will be supported by the contractor and manufacturer for a minimum time period as follows:
   1. All Cameras shall carry a minimum 3 year, complete warranty from date of commission. No charge shall be made for a valid warranty claim within the 3 year warranty period.

SECURITY SENSITIVE INFORMATION – LAW ENFORCEMENT CONFIDENTIAL. DO NOT PHOTOCOPY.THIS INFORMATION IS PROTECTED AGAINST DISCLOSURE BY THE PROVISIONS CONTAINED IN THE HOMELAND SECURITY ACT OF 2002, 49 U.S.C. 114(s), AND TSA'S REGULATION IMPLEMENTING THIS AUTHORITY, SET FORTH IN 49 CFR PART 1520.

2. All Servers and Server Equipment shall carry a minimum 5 year, complete warranty from date of commission. No charge shall be made for a valid warranty claim within the 5 year warranty period.

B. Unless otherwise noted, all materials and equipment shall be new, of the type, capacity, and quality specified and free from defects. Material shall bear the label of, or be listed by the Underwriters' Laboratories (U.L.) unless of a type for which label or listing service is not provided.

C. All equipment listed in this specification may not be required. It is the Contractors responsibility to determine exact equipment and quantities from the drawings and their site survey.

D. For compatibility and ease of installation, materials shall be of same brand or manufacturer throughout for each class of material or equipment, wherever possible.

E. All enclosures for all equipment shall be of metal throughout the system unless noted otherwise.

2.02 MANUFACTURERS

A. The following CCTV manufacturers have been approved for use on this project. However, cameras shall be provided by a single manufacturer, once determined, to maintain architectural and maintenance continuity. The contractor must provide a separate price for each camera solution (4 separate solutions) based one of the listed manufacturers in a manner that all functional requirements are met and to ensure compatibility with the HAS recording system manufactured by "Honeywell".

B. Unless otherwise noted in the Specifications, no substitutions will be accepted.

1. Camera part numbers are listed in Section 2.04 below to establish a baseline product and not necessarily required.
2. ONVIF/PSIA conformance is required for all IP cameras.
3. All IP cameras shall have a minimum of two, H.264 video streams.
4. A single manufacture is required for all cameras except 360 degree cameras.
5. CCTV Components:
6. Cameras shall be products by Honeywell, unless otherwise noted.
7. Camera lenses shall be products of Honeywell, unless otherwise noted.
8. Camera housings shall be products of Honeywell, unless otherwise noted.
9. Camera power supplies shall be products of Honeywell, Altronix, Securitron or approved equal.

C. 360 Cameras
1. Cameras shall be products of Oncam or approved equal.

D. NVR Storage and Retrieval System:
1. Servers shall be products of Dell or approved equal.
2. Storage arrays shall be products of Dell or approved equal.

SECURITY SENSITIVE INFORMATION – LAW ENFORCEMENT CONFIDENTIAL. DO NOT PHOTOCOPY.THIS INFORMATION IS PROTECTED AGAINST DISCLOSURE BY THE PROVISIONS CONTAINED IN THE HOMELAND SECURITY ACT OF 2002, 49 U.S.C. 114(s), AND TSA'S REGULATION IMPLEMENTING THIS AUTHORITY, SET FORTH IN 49 CFR PART 1520.

3. NVR and VMS software shall be products of Honeywell, latest release.

2.03 USER INTERFACE SOFTWARE:

A. Contractor shall provide and install latest release of Honeywell MaxPro NVR (NVR) server application and Honeywell MaxPro VMS on all new servers and workstations. Contractor must also provide any ancillary software required such as database applications, client applications, utility applications, backup applications, fault tolerance and fail over applications, etc. necessary for complete operation and maintenance.

B. Contractor is responsible to furnish, install and/or upgrade server and workstation operating systems compatible with the NVR/VMS application where required.

C. NVR/VMS must support H2.64, MPEG-4 and MJPEG video compression algorithms.

2.04 CAMERAS

A. IP Camera Specs:
   1. Camera Type 1: (HD IP Fixed Interior):
      a. Camera: 720p Day/Night High Definition IP Camera
      b. Lens: 3.3 to 12 mm F1.4 varifocal lens
      c. Housing: Vandal Resistant with Tinted Acrylic Dome
      d. Product: Honeywell H3S1P
   2. Camera Type 2: (HD IP Fixed Exterior):
      a. Camera: 720p Day/Night High Definition IP Day/Night Camera
      b. Lens: 3.3 to 12 mm F1.6 varifocal lens
      c. Housing: Vandal Resistant with Tinted Acrylic Dome
      d. Product: Honeywell H4D1F1
   3. Camera Type 3: (360 Degree Camera):
      a. Product: Oncam IPC, Model #GE-IP-001 or equivalent Camera
      b. Product: Oncam IPC, Model #GE-IP-002 for Pole mount application

2.05 CAMERA POWER SUPPLIES

A. All IP Cameras will be power via a “Power over Ethernet” (POE) network switch in the IDF as indicated on the drawings.

B. Outdoor power supplies shall be housed in a NEMA-4 rated enclosure, with integral transformer and fused power supply board, or PoE Injector.

C. Cameras that are installated further than 100m from a telecom room, may require the use of an in-line POE+ Ethernet Extender installed mid-run. .

D. All power supply enclosures shall contain:

   1. Key lock
   2. Tamper switch

SECURITY SENSITIVE INFORMATION – LAW ENFORCEMENT CONFIDENTIAL. DO NOT PHOTOCOPY.THIS INFORMATION IS PROTECTED AGAINST DISCLOSURE BY THE PROVISIONS CONTAINED IN THE HOMELAND SECURITY ACT OF 2002, 49 U.S.C. 114(s), AND TSA’S REGULATION IMPLEMENTING THIS AUTHORITY, SET FORTH IN 49 CFR PART 1520.

3. Tamper switch control wire to access control field panel in IDF room
4. Programming for tamper switch inputs to access control system

2.06 POE+ ETHERNET EXTENDER

A. Veracity OutreachMax or approved equal

2.09 ELECTRICAL REQUIREMENTS

A. Unless otherwise noted on the Design Drawings, terminate all equipment for this system to the new power supplies provided as part of this contract or the existing power supplies as shown on the drawings. Items requiring 120/208 VAC power as shown on the drawings shall be provided as part of this project and installed in accordance with Division 26.

B. Check the adequacy of all existing power and wiring before making final connections and applying power to the equipment. If such wiring/service is not proper and/or adequate, notify the City and/or the City Engineer in writing, requesting specific correction of same. Should the Contractor fail to provide proper notification of wiring inadequacies to the City and/or the City Engineer, he shall be bound to correct problems from such inadequacies with no cost to the City

2.10 SPARE PARTS

A. Provide 5% spare cameras of each type used with a minimum 1 of each type.

B. Provide min. 5% overage on storage array and server capacity.

C. Provide 5% extra IP Camera Licenses

PART 3- EXECUTION

3.01 CAMERAS

A. Camera viewing/recording hardware and software shall be configured according to the following criteria:

2. Video Display:
   a. Live Viewing @ 15fps
3. Image Size/Compression:
   a. Standard Definition: (704x480, 4CIF)
   b. High Definition: (1920x1080)
   c. H.264 low compression
4. Background Recording:
   a. Background recording on ALL cameras 24 hours per day 7 days per week @ 5fps
   b. Retain all background recordings on-line for 30 days (720 hours)

SECURITY SENSITIVE INFORMATION – LAW ENFORCEMENT CONFIDENTIAL. DO NOT PHOTOCOPY.THIS INFORMATION IS PROTECTED AGAINST DISCLOSURE BY THE PROVISIONS CONTAINED IN THE HOMELAND SECURITY ACT OF 2002, 49 U.S.C. 114(s), AND TSA'S REGULATION IMPLEMENTING THIS AUTHORITY, SET FORTH IN 49 CFR PART 1520.

5. Alarm/Event Recording:
   a. 25 event-activated recordings per camera per day
   b. Event-activated recording rate @ 10fps
   c. 60 seconds of pre-event record; 60 seconds post-event record
   d. Retain all stored video from every camera on-line for 30 days (720 hours)
6. User-Activated Recording:
   a. 2 user-activated recordings per camera per day. If user activated recordings for the day are unused, they will be banked for future use if required.
   b. User-activated recording rate @ 10fps
   c. 60 seconds of pre-event record; 60 seconds post-event record
   d. Retain all stored video on-line for 30 days (720 hours)

D. Install cameras as shown on the Design Drawings. Wall or ceiling mounts shall be anchored/braced as required, at a height which shall allow for camera repositioning. Whereever possible, a flush mount installation method shall be used to minimize the visible footprint of the cameras. Coordinate mounting heights and views with the owner as required.

E. All exposed video cabling from wall to camera shall be neatly dressed and wrapped in black spiral plastic sheath.

F. Label all cameras with VSS ID as programmed into the HAS software system. Label shall be minimum 14pt font. Use 3-layer engraved lexan label for all interior cameras. Use metallic die-tapped label for exterior cameras. Label shall be permanently affixed adjacent to the VSS housing. The label shall be visible and may not be attached to the camera housing.

G. Label all new and existing VSS conduits in accordance with section HAS labeling standards. For existing conduits, labels are required at conduit ends and junction boxes only.

H. Label all new and existing VSS cables. Labels shall be vinyl wrap around heat shrink type that will not fade with minimum 8pt font. Cables shall be labeled inside each junction box, enclosure and at each end.

I. Label all VSS equipment following in accordance with this section.

J. Provide final termination of power to camera as required, and/or control cables, and terminate at the VSS monitoring equipment locations as designated by the Design Drawings. Inspect, test, and clean all camera equipment after installation.

K. In order to ensure a complete, functional Dome, for bidding purposes, where information is not available from the Owner upon request, the worst-case condition shall be assumed.

   1. Interfaces shall be coordinated with the Owner's representative, where appropriate.

   2. All necessary backboxes, racks, connectors, supports, conduit, cable, and wire must be furnished and installed to provide a complete and reliable Dome installation. Exact

SECURITY SENSITIVE INFORMATION – LAW ENFORCEMENT CONFIDENTIAL. DO NOT PHOTOCOPY.THIS INFORMATION IS PROTECTED AGAINST DISCLOSURE BY THE PROVISIONS CONTAINED IN THE HOMELAND SECURITY ACT OF 2002, 49 U.S.C. 114(s), AND TSA'S REGULATION IMPLEMENTING THIS AUTHORITY, SET FORTH IN 49 CFR PART 1520.

location of all boxes, conduit, and wiring runs shall be presented to the Owner for approval in advance of any installation.

3. All conduit, cable, and wire shall be installed parallel and square with building lines, including raised floor areas. Conduit fill shall not exceed forty percent (40%). All wires shall be gathered and tied up to create a neat and professional installation.

L. Provide for one adjustment after installation for each camera and lens as a part of the Bid and ensure that the cable guidelines are followed to allow maximum distance for relocation if necessary.

M. Coordinate with Owner to obtain inspection and approval of all cable raceway prior to installation of cable.

3.02 VIDEO DISTRIBUTION QUALITY ASSURANCE

A. Contractor shall test the video distribution channel (Category 6 Ethernet Cable) from every new IP camera to the input of the network switch in the IDF using a certified Category 6 Test Device.

1. Submit table indicating test results for approval. If test results fail, contractor is responsible to do whatever is required to rectify the problem at their expense.

3.03 ACCEPTANCE TESTING AND COMMISSIONING

A. On-Site Acceptance Testing and Commissioning Service:

1. Prepare the Acceptance Test Format for acceptance by the owner prior to commencement of acceptance testing. At a minimum, test must include: Camera views and NVR settings

2. Perform these on-site acceptance tests with witness by the owner, providing all personnel and equipment necessary to perform these tests.

3. Provide a hard copy of all system points tested, as well as a letter certifying 100% completeness and operation of this system, with each device listed and the results of its operational testing (passed or failed).

4. Upon completion of testing, the Contractor and the owner shall sign the Acceptance Test forms documenting system completion and acceptance.

3.04 COMMISSIONING SERVICES

A. Program system and perform all required operational checks to ensure that the system is functioning in full accordance with these Specifications

SECURITY SENSITIVE INFORMATION – LAW ENFORCEMENT CONFIDENTIAL. DO NOT PHOTOCOPY.THIS INFORMATION IS PROTECTED AGAINST DISCLOSURE BY THE PROVISIONS CONTAINED IN THE HOMELAND SECURITY ACT OF 2002, 49 U.S.C. 114(s), AND TSA'S REGULATION IMPLEMENTING THIS AUTHORITY, SET FORTH IN 49 CFR PART 1520.

B. System programming should be complete meeting all user-defined requirements at time of system acceptance. Provide configuration, programming and optimization as follows

1. Coordinate with designated HAS personnel to confirm programming requirements for all new cameras. Programming shall include:
   a. On-screen camera call-up ID and name.
   b. Up to three (3) pre-set pre-position and "home" position(s) for all motorized cameras.
   c. Association of alarm events generated by ProWatch (including AVPS and RDTS) with one or more cameras as required to initiate any or all of the following actions:
      i. Automatic execution of a pre-position command of one or more cameras.
      ii. Automatic display of one or more cameras, each on a designated monitor.
      iii. Automatic adjustment of recording frame rate from background rate to alarm rate for each of the cameras receiving alarm events.
      iv. Automatic display of a plan drawing (refer to "graphic display configuration below for additional details) which indicates the physical location of the camera(s) and associated alarm device(s).

2. Coordinate with designated HAS personnel to configure:
   a. Background recording frame rate
   b. Alarm recording frame rate
   c. Pre and post alarm recording duration
   d. Record resolution
   e. Display resolution
3. Optimize distribution of video input signals among co-located camera servers to maximize storage and network efficiency
4. Documentation: Provide Excel file that reflects the following information for each camera:
   a. Camera display name
   b. Network switch port number (IDF)
   c. Camera server location (MDF)
   d. Network switch port number (MDF)
   e. Camera server number Background recording frame rate
   f. Alarm recording frame rate
   g. Pre and post alarm recording duration
   h. Record resolution
   i. Display resolution
   j. Associated ProWatch alarm input name(s)
5. Commissioning:
   a. Utilizing Excel file described in Paragraph 4 above, participate with designated personnel during commissioning to confirm accurate and complete compliance with all requirements described in Paragraphs 1 through 4 above.
   b. Coordinate with Contractor field personnel during commissioning to identify and document any deficiencies (including those associated with field installation).
   c. Prepare punch list to reflect all deficiencies following each commissioning session
   d. Participate with designated personnel to confirm correction of each deficiency.

SECURITY SENSITIVE INFORMATION – LAW ENFORCEMENT CONFIDENTIAL. DO NOT PHOTOCOPY.THIS INFORMATION IS PROTECTED AGAINST DISCLOSURE BY THE PROVISIONS CONTAINED IN THE HOMELAND SECURITY ACT OF 2002, 49 U.S.C. 114(s), AND TSA'S REGULATION IMPLEMENTING THIS AUTHORITY, SET FORTH IN 49 CFR PART 1520.

e. Obtain signed acceptance from designated personnel for each camera following correction of any deficiencies.

END OF SECTION

SECURITY SENSITIVE INFORMATION – LAW ENFORCEMENT CONFIDENTIAL. DO NOT PHOTOCOPY.THIS INFORMATION IS PROTECTED AGAINST DISCLOSURE BY THE PROVISIONS CONTAINED IN THE HOMELAND SECURITY ACT OF 2002, 49 U.S.C. 114(s), AND TSA'S REGULATION IMPLEMENTING THIS AUTHORITY, SET FORTH IN 49 CFR PART 1520.

SECTION 28 3100 - FIRE DETECTION AND ALARM

PART 1 GENERAL

1.1 SUBMITTALS

A. Design Documents: Submit all information required for plan review and permitting by authorities having jurisdiction, including but not limited to floor plans, riser diagrams, and description of operation:
   1. NFPA 72 "Record of Completion", filled out to the extent known at the time.
   2. Clear and concise description of operation, with input/output matrix similar to that shown in NFPA 72 Appendix A-7-5-2.2(9), and complete listing of software required.

1.2 QUALITY ASSURANCE

A. Designer Qualifications: NICET Level III or IV (3 or 4) certified fire alarm technician or registered fire protection engineer, employed by fire alarm control panel manufacturer, xxx, or installer, with experience designing fire alarm systems in the jurisdictional area of the authorities having jurisdiction.

B. Installer Qualifications: Firm with minimum 3 years documented experience installing fire alarm systems of the specified type and providing contract maintenance service as a regular part of their business.

PART 2 PRODUCTS

2.1 FIRE ALARM SYSTEM

A. Fire Alarm System: Provide a new automatic fire detection and alarm system:
   1. Provide all components necessary, regardless of whether shown in the contract documents or not.
   2. Protected Premises: Entire building shown on drawings.
   3. Evacuation Alarm: Multiple smoke zones; allow for evacuation notification of any individual zone or combination of zones, in addition to general evacuation of entire premises.
   4. Voice Notification: Provide emergency voice/alarm communications with multichannel capability; digital.
   5. Master Control Unit (Panel): New, located at fire command center.

B. Supervising Stations and Fire Department Connections:
   1. Public Fire Department Notification: By on-premises supervising station.
   2. On-Premises Supervising Station: Existing proprietary station operated by Owner, located at .
   3. Means of Transmission to On-Premises Supervising Station: Directly connected noncoded system.

C. Power Sources:
   1. Primary: Dedicated branch circuits of the facility power distribution system.
   2. Secondary: Storage batteries.
   3. Capacity: Sufficient to operate entire system for period specified by NFPA 72.
   4. Each Computer System: Provide uninterruptible power supply (UPS).

2.2 FIRE SAFETY SYSTEMS INTERFACES

A. Supervision: Provide supervisory signals in accordance with NFPA 72 for the following:

2.3 COMPONENTS

A. General:
   1. Provide flush mounted units where installed in finish areas; in unfinished areas, surface mounted unit are acceptable.
   2. Provide legible, permanent labels for each control device, using identification used in operation and maintenance data.

B. Fire Alarm Control Units, Initiating Devices, and Notification Appliances: Analog, addressable type; listed, classified, and labeled as suitable for the purpose intended.

C. Circuit Conductors: Copper or optical fiber; provide 200 feet extra; color code and label.

D. Surge Protection: In accordance with IEEE C62.41.2 category B combination waveform and NFPA 70; except for optical fiber conductors.

E. Locks and Keys: Deliver keys to Owner.

F. Instruction Charts: Printed instruction chart for operators, showing steps to be taken when a signal is received (normal, alarm, supervisory, and trouble); easily readable from normal operator's station.

END OF SECTION

SECTION 31 10 00 – SITE CLEARING

PART 1 - GENERAL

1.1 RELATED DOCUMENTS

A. Drawings and general provisions of the Contract, including General and Supplementary Conditions and Division 1 Specification Sections, apply to this Section.

1.2 SUMMARY

A. This Section includes the following:

1. Protecting existing trees and vegetation to remain.
2. Removing trees and other vegetation.
3. Clearing and grubbing.
4. Topsoil stripping.
5. Removing above-grade site improvements.
6. Disconnecting, capping or sealing, and abandoning site utilities in place.
7. Disconnecting, capping or sealing, and removing site utilities.

1.3 DEFINITIONS

A. Topsoil: Natural or cultivated surface-soil layer containing organic matter and sand, silt, and clay particles; friable, pervious, and black or a darker shade of brown, gray, or red than underlying subsoil; reasonably free of subsoil, clay lumps, gravel, and other objects more than 2 inches in diameter; and free of weeds, roots, and other deleterious materials.

1.4 MATERIALS OWNERSHIP

A. Except for materials indicated to be stockpiled or to remain Owner's property, cleared materials shall become Contractor's property and shall be removed from the site.

1.5 SUBMITTALS

A. Photographs or videotape, sufficiently detailed, of existing conditions of trees and plantings, adjoining construction, and site improvements that might be misconstrued as damage caused by site clearing.

B. Record drawings according to Section 01 77 00 – Closeout Procedures.

1. Identify and accurately locate capped utilities and other subsurface structural, electrical, and mechanical conditions.

1.6 QUALITY ASSURANCE

A. Preinstallation Conference: Conduct conference at Project site to comply with requirements in Section 01 31 00 – Project Management and Coordination.

1.7 PROJECT CONDITIONS

A. Traffic: Minimize interference with adjoining roads, streets, walks, and other adjacent occupied or used facilities during site-clearing operations.

1. Do not close or obstruct streets, walks, or other adjacent occupied or used facilities without permission from Owner and authorities having jurisdiction.
2. Provide alternate routes around closed or obstructed traffic ways if required by authorities having jurisdiction.

B. Salvable Improvements: Carefully remove items indicated to be salvaged and store on Owner's premises where indicated.

C. Notify utility locator service for area where Project is located before site clearing.

PART 2 - PRODUCTS (Not Applicable)

2.1 SOIL MATERIALS

A. Satisfactory Soil Materials: Requirements for satisfactory soil materials are specified in Section 31 23 16.13 – Excavation and Backfill for Utilities.

1. Obtain approved borrow soil materials off-site when satisfactory soil materials are not available on-site.

PART 3 - EXECUTION

3.1 PREPARATION

A. Protect and maintain benchmarks and survey control points from disturbance during construction.

B. Provide erosion-control measures to prevent soil erosion and discharge of soil-bearing water runoff or airborne dust to adjacent properties and walkways.

C. Locate and clearly flag trees and vegetation to remain or to be relocated.

D. Protect existing site improvements to remain from damage during construction.

1. Restore damaged improvements to their original condition, as acceptable to Owner.

3.2 TREE PROTECTION

A. Erect and maintain a temporary fence around drip line of individual trees or around perimeter drip line of groups of trees to remain. Remove fence when construction is complete.

1. Do not store construction materials, debris, or excavated material within drip line of remaining trees.
2. Do not permit vehicles, equipment, or foot traffic within drip line of remaining trees.

B. Do not excavate within drip line of trees, unless otherwise indicated.

C. Where excavation for new construction is required within drip line of trees, hand clear and excavate to minimize damage to root systems. Use narrow-tine spading forks, comb soil to expose roots, and cleanly cut roots as close to excavation as possible.

1. Cover exposed roots with burlap and water regularly.
2. Temporarily support and protect roots from damage until they are permanently relocated and covered with soil.

3. Coat cut faces of roots more than 1-1/2 inches in diameter with an emulsified asphalt or other approved coating formulated for use on damaged plant tissues.
4. Cover exposed roots with wet burlap to prevent roots from drying out. Backfill with soil as soon as possible.

D. Repair or replace trees and vegetation indicated to remain that are damaged by construction operations, in a manner approved by Project Manager.

1. Employ a qualified arborist, licensed in jurisdiction where Project is located, to submit details of proposed repairs and to repair damage to trees and shrubs.
2. Replace trees that cannot be repaired and restored to full-growth status, as determined by the qualified arborist.

3.3 UTILITIES

A. Contractor will disconnect and seal indicated utilities that serve existing structures before site clearing begins.

1. Verify that utilities have been disconnected and capped before proceeding with site clearing.

B. Locate, identify, disconnect, and seal or cap off utilities indicated to be removed.

1. Owner will arrange to shut off indicated utilities when requested by Contractor.
2. Arrange to shut off indicated utilities with utility companies.

C. Excavate for and remove underground utilities indicated to be removed.

3.4 CLEARING AND GRUBBING

A. Remove obstructions, trees, shrubs, grass, and other vegetation to permit installation of new construction. Removal includes digging out stumps and obstructions and grubbing roots.

1. Do not remove trees, shrubs, and other vegetation indicated to remain or to be relocated.
2. Cut minor roots and branches of trees indicated to remain in a clean and careful manner where such roots and branches obstruct installation of new construction.
3. Completely remove stumps, roots, obstructions, and debris extending to a depth of 18 inches below exposed subgrade.
4. Use only hand methods for grubbing within drip line of remaining trees.

B. Fill depressions caused by clearing and grubbing operations with satisfactory soil material, unless further excavation or earthwork is indicated.

1. Place fill material in horizontal layers not exceeding 8-inch loose depth, and compact each layer to a density equal to adjacent original ground.

3.5 TOPSOIL STRIPPING

A. Remove sod and grass before stripping topsoil.

B. Strip topsoil to whatever depths are encountered in a manner to prevent intermingling with underlying subsoil or other waste materials.

1. Strip surface soil of unsuitable topsoil, including trash, debris, weeds, roots, and other waste materials.

C. Stockpile topsoil materials away from edge of excavations without intermixing with subsoil. Grade and shape stockpiles to drain surface water. Cover to prevent windblown dust.

1. Limit height of topsoil stockpiles to 72 inches.
2. Do not stockpile topsoil within drip line of remaining trees.
3. Dispose of excess topsoil as specified for waste material disposal.
4. Stockpile surplus topsoil and allow for respreading deeper topsoil.

3.6 SITE IMPROVEMENTS

A. Remove existing above- and below-grade improvements as indicated and as necessary to facilitate new construction.

B. Remove slabs, paving, curbs, gutters, and aggregate base as indicated.

1. Unless existing full-depth joints coincide with line of demolition, neatly saw-cut length of existing pavement to remain before removing existing pavement. Saw-cut faces vertically.

3.7 DISPOSAL

A. Disposal: Remove surplus soil material, unsuitable topsoil, obstructions, demolished materials, and waste materials, including trash and debris, and legally dispose of them off Owner's property.

END OF SECTION 31 10 00

SECTION 31 20 00 - EARTH MOVING

PART 1 - GENERAL

1.1 SUMMARY

A. Section Includes:

1. Excavating and filling for rough grading the Site.
2. Preparing subgrades for slabs-on-grade walks pavements turf and grasses and plants.
3. Excavating and backfilling for buildings and structures.
4. Subbase course for concrete walks and pavements.
5. Subbase course and base course for asphalt paving.
6. Excavating and backfilling trenches for utilities and pits for buried utility structures.

1.2 DEFINITIONS

A. Backfill: Soil material used to fill an excavation.

1. Initial Backfill: Backfill placed beside and over pipe in a trench, including haunches to support sides of pipe.
2. Final Backfill: Backfill placed over initial backfill to fill a trench.

B. Base Course: Aggregate layer placed between the subbase course and hot-mix asphalt paving.

C. Bedding Course: Aggregate layer placed over the excavated subgrade in a trench before laying pipe.

D. Borrow Soil: Satisfactory soil imported from off-site for use as fill or backfill.

E. Excavation: Removal of material encountered above subgrade elevations and to lines and dimensions indicated.

1. Authorized Additional Excavation: Excavation below subgrade elevations or beyond indicated lines and dimensions as directed by Architect. Authorized additional excavation and replacement material will be paid for according to Contract provisions for changes in the Work.
2. Unauthorized Excavation: Excavation below subgrade elevations or beyond indicated lines and dimensions without direction by Architect. Unauthorized excavation, as well as remedial work directed by Architect, shall be without additional compensation.

F. Fill: Soil materials used to raise existing grades.

G. Structures: Buildings, footings, foundations, retaining walls, slabs, tanks, curbs, mechanical and electrical appurtenances, or other man-made stationary features constructed above or below the ground surface.

H. Subbase Course: Aggregate layer placed between the subgrade and base course for hot-mix asphalt pavement, or aggregate layer placed between the subgrade and a cement concrete pavement or a cement concrete or hot-mix asphalt walk.

I. Subgrade: Uppermost surface of an excavation or the top surface of a fill or backfill immediately below subbase, drainage fill, drainage course, or topsoil materials.

J. Utilities: On-site underground pipes, conduits, ducts, and cables as well as underground services within buildings.

1.3 PREINSTALLATION MEETINGS

A. Preinstallation Conference: Conduct preexcavation conference at Project site.

1.4 INFORMATIONAL SUBMITTALS

A. Material test reports.

1.5 FIELD CONDITIONS

A. Utility Locator Service: Notify utility locator service for area where Project is located before beginning earth-moving operations.

B. Do not commence earth-moving operations until plant-protection measures specified in Section 015639 "Temporary Tree and Plant Protection" are in place.

PART 2 - PRODUCTS

2.1 SOIL MATERIALS

A. General: Provide borrow soil materials when sufficient satisfactory soil materials are not available from excavations.

B. Satisfactory Soils: Soil Classification Groups GW, GP, GM, SW, SP, and SM according to ASTM D 2487, or a combination of these groups; free of rock or gravel larger than 3 inches in any dimension, debris, waste, frozen materials, vegetation, and other deleterious matter.

1. Liquid Limit: less than 40.
2. Plasticity Index: 8 to 20.

C. Unsatisfactory Soils: Soil Classification Groups GC, SC, CL, ML, OL, CH, MH, OH, and PT according to ASTM D 2487, or a combination of these groups.

1. Unsatisfactory soils also include satisfactory soils not maintained within 2 percent of optimum moisture content at time of compaction.

D. Subbase Material: Naturally or artificially graded mixture of natural or crushed gravel, crushed stone, and natural or crushed sand; ASTM D 2940/D 2940M; with at least 90 percent passing a 1-1/2-inch sieve and not more than 12 percent passing a No. 200 sieve.

E. Base Course: Naturally or artificially graded mixture of natural or crushed gravel, crushed stone, and natural or crushed sand; ASTM D 294/D 2940M 0; with at least 95 percent passing a 1-1/2-inch sieve and not more than 8 percent passing a No. 200 sieve.

F. Engineered Fill: Naturally or artificially graded mixture of natural or crushed gravel, crushed stone, and natural or crushed sand; ASTM D 2940/D 2940M; with at least 90 percent passing a 1-1/2-inch sieve and not more than 12 percent passing a No. 200 sieve.

G. Bedding Course: Naturally or artificially graded mixture of natural or crushed gravel, crushed stone, and natural or crushed sand; ASTM D 2940/D 2940M; except with 100 percent passing a 1-inch sieve and not more than 8 percent passing a No. 200 sieve.

H. Drainage Course: Narrowly graded mixture of washed crushed stone, or crushed or uncrushed gravel; ASTM D 448; coarse-aggregate grading Size 57; with 100 percent passing a 1-1/2-inch sieve and zero to 5 percent passing a No. 8 sieve.

2.2 ACCESSORIES

A. Warning Tape: Acid- and alkali-resistant, polyethylene film warning tape manufactured for marking and identifying underground utilities, 6 inches wide and 4 mils thick, continuously inscribed with a description of the utility; colored to comply with local practice or requirements of authorities having jurisdiction.

B. Detectable Warning Tape: Acid- and alkali-resistant, polyethylene film warning tape manufactured for marking and identifying underground utilities, a minimum of 6 inches wide and 4 mils thick, continuously inscribed with a description of the utility, with metallic core encased in a protective jacket for corrosion protection, detectable by metal detector when tape is buried up to 30 inches deep; colored to comply with local practice or requirements of authorities having jurisdiction.

PART 3 - EXECUTION

3.1 PREPARATION

A. Protect structures, utilities, sidewalks, pavements, and other facilities from damage caused by settlement, lateral movement, undermining, washout, and other hazards created by earth-moving operations.

B. Protect and maintain erosion and sedimentation controls during earth-moving operations.

C. Protect subgrades and foundation soils from freezing temperatures and frost. Remove temporary protection before placing subsequent materials.

3.2 EXCAVATION, GENERAL

A. Unclassified Excavation: Excavate to subgrade elevations regardless of the character of surface and subsurface conditions encountered. Unclassified excavated materials may include rock, soil materials, and obstructions. No changes in the Contract Sum or the Contract Time will be authorized for rock excavation or removal of obstructions.

1. If excavated materials intended for fill and backfill include unsatisfactory soil materials and rock, replace with satisfactory soil materials.

3.3 EXCAVATION FOR STRUCTURES

A. Excavate to indicated elevations and dimensions within a tolerance of plus or minus 1 inch. If applicable, extend excavations a sufficient distance from structures for placing and removing concrete formwork, for installing services and other construction, and for inspections.

1. Excavations for Grade Beams: Do not disturb bottom of excavation. Excavate by hand to final grade just before placing concrete reinforcement. Trim bottoms to required lines and grades to leave solid base to receive other work.
2. Excavation for Underground Tanks, Basins, and Mechanical or Electrical Utility Structures: Excavate to elevations and dimensions indicated within a tolerance of plus or minus 1 inch. Do not disturb bottom of excavations intended as bearing surfaces.

B. Excavations at Edges of Tree- and Plant-Protection Zones:

1. Excavate by hand or with an air spade to indicated lines, cross sections, elevations, and subgrades. If excavating by hand, use narrow-tine spading forks to comb soil and expose roots. Do not break, tear, or chop exposed roots. Do not use mechanical equipment that rips, tears, or pulls roots.
2. Cut and protect roots according to requirements in Section 015639 "Temporary Tree and Plant Protection."

3.4 EXCAVATION FOR WALKS AND PAVEMENTS

A. Excavate surfaces under walks and pavements to indicated lines, cross sections, elevations, and subgrades.

3.5 EXCAVATION FOR UTILITY TRENCHES

A. Excavate trenches to indicated gradients, lines, depths, and elevations.

B. Excavate trenches to uniform widths to provide the following clearance on each side of pipe or conduit. Excavate trench walls vertically from trench bottom to 12 inches higher than top of pipe or conduit unless otherwise indicated.

1. Clearance: As indicated.

C. Trench Bottoms: Excavate and shape trench bottoms to provide uniform bearing and support of pipes and conduit. Shape subgrade to provide continuous support for bells, joints, and barrels of pipes and for joints, fittings, and bodies of conduits. Remove projecting stones and sharp objects along trench subgrade.

1. Excavate trenches 6 inches deeper than elevation required in rock or other unyielding bearing material to allow for bedding course.

D. Trenches in Tree- and Plant-Protection Zones:

1. Hand-excavate to indicated lines, cross sections, elevations, and subgrades. Use narrow-tine spading forks to comb soil and expose roots. Do not break, tear, or chop exposed roots. Do not use mechanical equipment that rips, tears, or pulls roots.
2. Do not cut main lateral roots or taproots; cut only smaller roots that interfere with installation of utilities.
3. Cut and protect roots according to requirements in Section 015639 "Temporary Tree and Plant Protection."

3.6 SUBGRADE INSPECTION

A. Proof-roll subgrade below the building slabs and pavements with a pneumatic-tired dump truck to identify soft pockets and areas of excess yielding. Do not proof-roll wet or saturated subgrades.

B. Reconstruct subgrades damaged by freezing temperatures, frost, rain, accumulated water, or construction activities, as directed by Architect, without additional compensation.

3.7 UNAUTHORIZED EXCAVATION

A. Fill unauthorized excavation under foundations or wall footings by extending bottom elevation of concrete foundation or footing to excavation bottom, without altering top elevation. Lean concrete fill, with 28-day compressive strength of 2500 psi, may be used when approved by Architect.

1. Fill unauthorized excavations under other construction, pipe, or conduit as directed by Architect.

3.8 STORAGE OF SOIL MATERIALS

A. Stockpile borrow soil materials and excavated satisfactory soil materials without intermixing. Place, grade, and shape stockpiles to drain surface water. Cover to prevent windblown dust.

1. Stockpile soil materials away from edge of excavations. Do not store within drip line of remaining trees.

3.9 UTILITY TRENCH BACKFILL

A. Place backfill on subgrades free of mud, frost, snow, or ice.

B. Place and compact bedding course on trench bottoms and where indicated. Shape bedding course to provide continuous support for bells, joints, and barrels of pipes and for joints, fittings, and bodies of conduits.

C. Initial Backfill: Place and compact initial backfill of satisfactory soil, free of particles larger than 1 inch in any dimension, to a height of 12 inches over the pipe or conduit.

1. Carefully compact initial backfill under pipe haunches and compact evenly up on both sides and along the full length of piping or conduit to avoid damage or displacement of piping or conduit. Coordinate backfilling with utilities testing.

D. Final Backfill: Place and compact final backfill of satisfactory soil to final subgrade elevation.

E. Warning Tape: Install warning tape directly above utilities, 12 inches below finished grade, except 6 inches below subgrade under pavements and slabs.

3.10 SOIL FILL

A. Plow, scarify, bench, or break up sloped surfaces steeper than 1 vertical to 4 horizontal so fill material will bond with existing material.

B. Place and compact fill material in layers to required elevations as follows:

1. Under grass and planted areas, use satisfactory soil material.
2. Under walks and pavements, use satisfactory soil material.
3. Under steps and ramps, use engineered fill.
4. Under building slabs, use engineered fill.
5. Under footings and foundations, use engineered fill.

3.11 SOIL MOISTURE CONTROL

A. Uniformly moisten or aerate subgrade and each subsequent fill or backfill soil layer before compaction to within 2 percent of optimum moisture content.

1. Do not place backfill or fill soil material on surfaces that are muddy, frozen, or contain frost or ice.
2. Remove and replace, or scarify and air dry, otherwise satisfactory soil material that exceeds optimum moisture content by 2 percent and is too wet to compact to specified dry unit weight.

3.12 COMPACTION OF SOIL BACKFILLS AND FILLS

A. Place backfill and fill soil materials in layers not more than 8 inches in loose depth for material compacted by heavy compaction equipment and not more than 4 inches in loose depth for material compacted by hand-operated tampers.

B. Place backfill and fill soil materials evenly on all sides of structures to required elevations and uniformly along the full length of each structure.

C. Compact soil materials to not less than the following percentages of maximum dry unit weight according to ASTM D 698:

1. Under structures, building slabs, steps, and pavements, scarify and recompact top 12 inches of existing subgrade and each layer of backfill or fill soil material at 95 percent.
2. Under walkways, scarify and recompact top 6 inches below subgrade and compact each layer of backfill or fill soil material at 92 percent.
3. Under turf or unpaved areas, scarify and recompact top 6 inches below subgrade and compact each layer of backfill or fill soil material at 85 percent.
4. For utility trenches, compact each layer of initial and final backfill soil material at 85 percent.

3.13 GRADING

A. General: Uniformly grade areas to a smooth surface, free of irregular surface changes. Comply with compaction requirements and grade to cross sections, lines, and elevations indicated.

B. Site Rough Grading: Slope grades to direct water away from buildings and to prevent ponding. Finish subgrades to elevations required to achieve indicated finish elevations, within the following subgrade tolerances:

1. Turf or Unpaved Areas: Plus or minus 1 inch.
2. Walks: Plus or minus 1 inch.
3. Pavements: Plus or minus 1/2 inch.

C. Grading inside Building Lines: Finish subgrade to a tolerance of 1/2 inch when tested with a 10-foot straightedge.

3.14 SUBBASE AND BASE COURSES UNDER PAVEMENTS AND WALKS

A. Place subbase course and base course on subgrades free of mud, frost, snow, or ice.

B. On prepared subgrade, place subbase course and base course under pavements and walks as follows:

1. Shape subbase course and base course to required crown elevations and cross-slope grades.
2. Place subbase course and base course that exceeds 6 inches in compacted thickness in layers of equal thickness, with no compacted layer more than 6 inches thick or less than 3 inches thick.

3. Compact subbase course and base course at optimum moisture content to required grades, lines, cross sections, and thickness to not less than percent of maximum dry unit weight according to ASTM D 698.

3.15 FIELD QUALITY CONTROL

A. Special Inspections: Owner will engage a qualified special inspector to perform inspections:

B. Testing Agency: Owner will engage a qualified geotechnical engineering testing agency to perform tests and inspections.

C. Allow testing agency to inspect and test subgrades and each fill or backfill layer. Proceed with subsequent earth moving only after test results for previously completed work comply with requirements.

D. When testing agency reports that subgrades, fills, or backfills have not achieved degree of compaction specified, scarify and moisten or aerate, or remove and replace soil materials to depth required; recompact and retest until specified compaction is obtained.

3.16 PROTECTION

A. Protecting Graded Areas: Protect newly graded areas from traffic, freezing, and erosion. Keep free of trash and debris.

B. Repair and reestablish grades to specified tolerances where completed or partially completed surfaces become eroded, rutted, settled, or where they lose compaction due to subsequent construction operations or weather conditions.

C. Where settling occurs before Project correction period elapses, remove finished surfacing, backfill with additional soil material, compact, and reconstruct surfacing.

1. Restore appearance, quality, and condition of finished surfacing to match adjacent work, and eliminate evidence of restoration to greatest extent possible.

3.17 DISPOSAL OF SURPLUS AND WASTE MATERIALS

A. Remove surplus satisfactory soil and waste materials, including unsatisfactory soil, trash, and debris, and legally dispose of them off Owner's property.

END OF SECTION 31 20 00

SECTION 31 22 16 - EXCAVATION AND GRADING FOR PAVING

PART 1 G E N E R A L

1.01 SECTION INCLUDES

A. Excavation and compaction of materials for driveways, sidewalks, trails and parking lots

B. Excavation and compaction of materials for ditches, swales and detention.

1.02 MEASUREMENT AND PAYMENT

A. Stipulated Price (Lump Sum). If Contract is Stipulated Price Contract, payment for work in this Section is included in total Stipulated Price.

1.03 REFERENCES

A. ASTM D 698 - Standard Test Method for Laboratory Compaction Characteristics of Soil Using Standard Effort (12.44 ft-lbf/ft^3).

B. ASTM D 2216 - Standard Test Method for Laboratory Determination of Water (Moisture) Content of Soil and Rock by Mass.

C. ASTM D 2922 - Standard Test Methods for Density of Soil and Soil-Aggregate in Place by Nuclear Methods (Shallow Depth).

D. ASTM D 3017 - Standard Test Method for Water content of Soil and Rock in Place by Nuclear Methods (Shallow Depth).

E. ASTM D 4318 - Standard Test Methods for Liquid Limit, Plastic Limit, and Plasticity Index of Soils.

PART 2 P R O D U C T S

2.01 MATERIALS

A. Provide topsoil conforming to requirements of Section 32 91 19.13 – Topsoil.

B. Provide backfill which is excavated material, graded free of roots, lumps greater than 6 inches, rocks larger than 3 inches, organic material, and debris.

C. Provide structural backfill, which is select material meeting following requirements:

1. Plasticity index: not less than 12 nor more than 20.

2. Maximum liquid limit: 45

PART 3 E X E C U T I O N

3.01 PREPARATION

A. Identify required lines, levels, and datum.

B. Identify and flag surface and aerial utilities.

C. Notify utility companies to remove or relocate utilities.

D. Identify, stake, and flag known utility locations below grade. Make temporary or permanent relocation of underground pipes, ducts, or utilities where indicated on Drawings.

E. Upon discovery of unknown or badly deteriorated utilities, or concealed conditions, discontinue work. Notify Project Manager and obtain instructions before proceeding in such areas.

F. Obtain approval of top soil quality before excavating and stockpiling.

3.02 PROTECTION

A. Protect following from damage or displacement:

1. Trees, shrubs, lawns, existing structures, and other features outside of grading limits.

2. Utilities either above or below grade, which are to remain.

3.03 TOPSOIL REMOVAL

A. Strip off topsoil from area to be excavated to minimum depth of 6 inches, unless indicated otherwise on Drawings.

B. Stockpile topsoil in designated location for reuse. Stockpile topsoil to depth not exceeding 8 feet. Cover to protect from erosion.

3.04 SOIL EXCAVATION

A. Excavate to lines and grades shown on Drawings.

B. Remove unsuitable material not meeting specifications. Backfill with embankment materials and compact to requirements.

C. Record location and plug and fill inactive water and oil wells. Conform to Texas Department of Health, Texas Natural Resource Conservation Commission, and Texas Railroad Commission requirements. Notify Project Manager prior to plugging wells.

D. At intersections, grade back at minimum slope of one inch per foot. Produce smooth riding junction with intersecting street. Maintain proper drainage.

E. When area is inadvertently over excavated, fill area in accordance with requirements no additional cost to Owner.

F. Remove material not qualified for use and excess soil not being reused from site in accordance with requirements of Section 01 74 19 – Construction Waste Management and Disposal.

3.05 COMPACTION

A. Maintain optimum moisture content of subgrade to attain required density.

B. Compact to following minimum densities at moisture content of optimum to 3 percent above optimum as determined by ASTM D 698, unless otherwise indicated on Drawings:

1. Areas under future paving and shoulders: Minimum density of 95 percent of maximum dry density.

2. Other areas: Minimum density of 90 percent of maximum dry density.

3.06 TOLERANCES

A. Top of Compacted Surface: Plus or minus 1/2 inch in cross section, or in 16-foot length.

3.07 FIELD QUALITY CONTROL

A. Testing will be performed under provisions of Section 01 40 00 – Quality Requirements

B. Test and analysis of soil materials will be performed in accordance with ASTM D 4318, ASTM D 2216, and ASTM D 698.

C. Compaction testing will be performed in accordance with ASTM D 698 or ASTM D 2922 and ASTM D 3017.

D. A minimum of three tests will be taken for each 1000 linear feet per lane of roadway.

E. When tests indicate work does not meet specified compaction requirements, recondition, recompact, and retest at no additional cost to City.

3.08 PROTECTION

A. Prevent erosion at all times. Maintain ditches and cut temporary swales to allow natural drainage in order to avoid damage to roadway. Do not allow water to pond.

B. Distribute construction traffic evenly over compacted areas, where practical, to aid in obtaining uniform compaction. Protect exposed areas having high moisture content from wheel loads that cause rutting.

C. Maintain excavation and embankment areas until start of subsequent work. Repair and recompact slides, washouts, settlements, or areas with loss of density.

END OF SECTION 31 22 16

SECTION 31 23 16.13 – EXCAVATION AND BACKFILL FOR UTILITIES

PART 1 - GENERAL

1.1 SUMMARY

A. This section includes the following:

1. Excavation, trenching, foundation, embedment, and backfill for installation of utilities, including manholes and other pipeline structures.

1.2 MEASUREMENT AND PAYMENT

A. Stipulated Price (Lump Sum). If Contract is Stipulated Price Contract, payment for Work in this Section is included in total Stipulated Price.

1.3 SUBMITTALS

A. Submit planned typical method of excavation, backfill placement and compaction including:

1. Trench widths.
2. Procedures for foundation and pipe zone bedding placement, and trench backfill compaction.
3. Procedures for assuring compaction against undisturbed soil when pre-manufactured trench safety systems are proposed.

B. Submit backfill material sources and product quality information in accordance.

C. Submit trench excavation safety program in accordance with requirements of Section 31 41 33 - Trench Safety.

D. Submit record of location of utilities as installed, referenced to survey control points. Include locations of utilities encountered or rerouted. Give stations, horizontal dimensions, elevations, inverts, and gradients.

1.4 DEFINITIONS

A. Pipe Foundation: Suitable and stable native soils that are exposed at trench subgrade after excavation to depth of bottom of bedding as shown on Drawings, or foundation backfill material placed and compacted in over-excavations.

B. Pipe Bedding: Portion of trench backfill that extends vertically from top of foundation up to level line at bottom of pipe, and horizontally from one trench sidewall to opposite sidewall.

C. Haunching: Material placed on either side of pipe from top of bedding up to springline of pipe and horizontally from one trench sidewall to opposite sidewall.

D. Initial Backfill: Portion of trench backfill that extends vertically from springline of pipe (top of haunching) up to level line 12 inches above top of pipe, and horizontally from one trench sidewall to opposite sidewall.

E. Pipe Embedment: Portion of trench backfill that consists of bedding, haunching and initial backfill.

F. Trench Zone: Portion of trench backfill that extends vertically from top of pipe embedment up to pavement subgrade or up to final grade when not beneath pavement.

G. Backfill: Suitable material meeting specified quality requirements placed and compacted under controlled conditions.

H. Surface Water Control: Diversion and drainage of surface water runoff and rain water away from trench excavation. Rain water and surface water accidentally entering trench shall be controlled and removed as part of excavation drainage.

I. Excavation Drainage: Removal of surface and seepage water in trench by sump pumping and using drainage layer, as defined in ASTM D 2321, placed on foundation beneath pipe bedding or thickened bedding layer of Class I material.

J. Trench Safety Systems include both protective systems and shoring systems as defined in Section 31 41 33 - Trench Safety.

K. Trench Shield (Trench Box): Portable worker safety structure moved along trench as work proceeds, used as protective system and designed to withstand forces imposed on it by cave-in, thereby protecting persons within trench. Trench shields may be stacked if so designed or placed in series depending on depth and length of excavation to be protected.

L. Shoring System: Structure that supports sides of an excavation to maintain stable soil conditions and prevent cave-ins, or to prevent movement of ground affecting adjacent installations or improvements.

1.5 REFERENCES

A. ASTM D 558 - Standard Test Methods for Moisture-Density Relations of Soil Cement Mixtures.

B. ASTM D 698 - Standard Test Method for Laboratory Compaction Characteristics of Soil Using Standard Effort (12,400 ft-lb/ft).

C. ASTM D 1556 - Standard Test Method for Density and Unit Weight of Soil in Place by Sand-Cone Method.

D. ASTM D 2321 - Standard Practice for Underground Installation of Thermoplastic Pipe for Sewers and Other Gravity Flow Applications.

E. ASTM D 2487 - Standard Classification of Soils for Engineering Purposes.

F. ASTM D 2922 - Standard Test Methods for Density of Soil and Soil-Aggregate in Place by Nuclear Methods (Shallow Depth).

G. ASTM D 3017 - Standard Test Method for Water Content of Soil and Rock in Place by Nuclear Methods (Shallow Depth).

H. ASTM D 4318 - Standard Test Method for Liquid Limit, Plastic Limit, and Plasticity Index of Soils.

J. Federal Regulations, 29 CFR Part 1926, Standards-Excavation, Occupational Safety and Health Administration (OSHA).

1.6 SCHEDULING

A. Schedule work so that pipe embedment can be completed on same day that acceptable foundation has been achieved for each section of pipe installation, manhole, or other structures.

1.7 SPECIAL SHORING DESIGN REQUIREMENTS

A. Have special shoring designed or selected by Contractor's Professional Engineer to provide support for sides of excavations, including soils and hydrostatic ground water pressures as applicable, and to prevent ground movements affecting adjacent installations or improvements such as structures, pavements and utilities. Special shoring may be a pre-manufactured system selected by Contractor's Professional Engineer to meet project site requirements based on manufacturer's standard design.

PART 2 - PRODUCTS

2.1 EQUIPMENT

A. Perform excavation with hydraulic excavator or other equipment suitable for achieving requirements of this Section.

B. Use only hand-operated tamping equipment until minimum cover of 12 inches is obtained over pipes, conduits, and ducts. Do not use heavy compacting equipment until adequate cover is attained to prevent damage to pipes, conduits, or ducts.

C. Use trench shields or other protective systems or shoring systems which are designed and operated to achieve placement and compaction of backfill directly against undisturbed native soil.

D. Use special shoring systems where required which may consist of braced sheeting, braced soldier piles and lagging, slide rail systems, or other systems meeting requirements.

2.2 MATERIAL CLASSIFICATIONS

A. Embedment and Trench Zone Backfill Materials:

1. Waterlines – use bank sand embedment.
2. Storm and sanitary sewers – use cement stabilized sand per Section 31 23 01 - Cement Stabilized Sand.

B. Geotextile (Filter Fabric): Conform to requirements of Section 01 57 13 – Storm Water Pollution Control.

PART 3 - EXECUTION

3.1 STANDARD PRACTICE

A. Install flexible pipe, including "semi-rigid" pipe, to conform to standard practice described in ASTM D 2321, and as described in this Section. Where an apparent conflict occurs between standard practice and requirements of this Section, this Section governs.

B. Install rigid pipe to conform to standard practice described in ASTM C 12.

3.2 PREPARATION

A. Perform work to conform to applicable safety standards and regulations. Employ trench safety system as specified in Section 31 41 33 – Trench Safety.

B. Immediately notify agency or company owning any existing utility line which is damaged, broken, or disturbed. Obtain approval from Project Manager and agency for any repairs or relocations, either temporary or permanent.

C. Install and operate necessary dewatering and surface-water controls.

D. Maintain permanent benchmarks, monumentation, and other reference points.

3.3 PROTECTION

A. Protect trees, shrubs, lawns, existing structures, and other permanent objects outside of grading limits and within grading limits as designated on Drawings.

B. Protect and support above-grade and below-grade utilities which are to remain.

C. Restore damaged permanent facilities to pre-construction conditions unless replacement or abandonment of facilities is indicated on Drawings.

D. Take measures to minimize erosion of trenches. Do not allow water to pond in trenches. Where slides, washouts, settlements, or areas with loss of density or pavement failures or potholes occur, repair, recompact, and pave those areas at no additional cost to Owner.

3.4 EXCAVATION

A. Except as otherwise specified or shown on Drawings, install underground utilities in open cut trenches with vertical sides.

B. Perform excavation work so that pipe, conduit, and ducts can be installed to depths and alignments shown on Drawings. Avoid disturbing surrounding ground and existing facilities and improvements.

C. Determine trench excavation widths using following schedule as related to pipe outside diameter (O.D.).

Nominal Pipe Size, Inches	Minimum Trench Width, Inches
Less than 18	O.D. + 18
Greater than 18	O.D. + 24

D. Use sufficient trench width or benches above embedment zone for installation of well point headers or manifolds and pumps where depth of trench makes it uneconomical or impractical to pump from surface elevation. Provide sufficient space between shoring cross braces to permit equipment operations and handling of forms, pipe, embedment and backfill, and other materials.

E. Upon discovery of unknown utilities, badly deteriorated utilities not designated for removal, or concealed conditions, discontinue work at that location. Notify Project Manager and obtain instructions before proceeding.

F. Shoring of Trench Walls.

1. Install Special Shoring in advance of trench excavation or simultaneously with trench excavation, so that soils within full height of trench excavation walls will remain laterally supported at all times.
2. For all types of shoring, support trench walls in pipe embedment zone throughout installation. Provide trench wall supports sufficiently tight to prevent washing trench wall soil out from behind trench wall support.
3. Leave sheeting driven into or below pipe embedment zone in place to preclude loss of support of foundation and embedment materials, unless otherwise directed by Project Manager. Leave rangers, walers, and braces in place as long as required to support sheeting, which has been cut off, and trench wall in vicinity of pipe zone.
4. Employ special methods for maintaining integrity of embedment or foundation material. Before moving supports, place and compact embedment to sufficient depths to provide

protection of pipe and stability of trench walls. As supports are moved, finish placing and compacting embedment.

5. If sheeting or other shoring is used below top of pipe embedment zone, do not disturb pipe foundation and embedment materials by subsequent removal. Maximum thickness of removable sheeting extending into embedment zone shall be equivalent of 1-inch-thick steel plate. As sheeting is removed, fill in voids left with grouting material.

G. Use of Trench Shields. When trench shield (trench box) is used as worker safety device, the following requirements apply:

1. Make trench excavations of sufficient width to allow shield to be lifted or pulled freely, without damage to trench sidewalls.
2. Move trench shields so that pipe, and backfill materials, after placement and compaction, are not damaged nor disturbed, nor degree of compaction reduced. Re-compact after shield is moved if soil is disturbed.
3. When required, place, spread, and compact pipe foundation and bedding materials beneath shield. For backfill above bedding, lift shield as each layer of backfill is placed and spread. Place and compact backfill materials against undisturbed trench walls and foundation.
4. Maintain trench shield in position to allow sampling and testing to be performed in safe manner.
5. Conform to applicable Government regulations.

H. Place sand or soil behind shoring or trench shield to prevent soil outside shoring from collapsing and causing voids under pavement. Immediately pack suitable material in outside voids following excavation to avoid caving of trench walls.

3.5 HANDLING EXCAVATED MATERIALS

A. Place material suitable for backfilling in stockpiles at distance from trench to prevent slides or cave-ins.

B. When required, provide additional select backfill material.

C. Do not place stockpiles of excess excavated materials on streets and adjacent properties. Protect backfill material to be used on site. Excavate trench so that pipe is centered in trench.

3.6 PIPE EMBEDMENT, PLACEMENT, AND COMPACTION

A. Remove loose, sloughing, caving, or otherwise unsuitable soil from bottoms and sidewalls of trenches immediately prior to placement of embedment materials.

B. Place embedment including bedding, haunching, and initial backfill as shown on Drawings.

C. For pipe installation, manually spread embedment materials around pipe to provide uniform bearing and side support when compacted. Protect flexible pipe from damage during placing of pipe zone bedding material. Perform placement and compaction directly against undisturbed soils in trench sidewalls, or against sheeting which is to remain in place.

D. Do not place trench shields or shoring within height of embedment zone unless means to maintain density of compacted embedment material are used. If moveable supports are used in embedment zone, lift supports incrementally to allow placement and compaction of material against undisturbed soil.

E. Do not damage coatings or wrappings of pipes during backfilling and compacting operations. When embedding coated or wrapped pipes, do not use crushed stone or other sharp, angular aggregates.

F. Place haunching material manually around pipe and compact it to provide uniform bearing and side support. If necessary, hold small-diameter or lightweight pipe in place during compaction of haunch areas and placement beside pipe with sand bags or other suitable means.

G. Place electrical conduit, if used, directly on pipe foundation without bedding.

H. Shovel in-place and compact embedment material using pneumatic tampers in restricted areas, and vibratory-plate compactors or engine-powered jumping jacks in unrestricted areas. Compact each lift before proceeding with placement of next lift. Water tamping is not allowed.

3.7 TRENCH ZONE BACKFILL PLACEMENT AND COMPACTION

A. Place backfill for pipe or conduits and restore surface as soon as practicable. Leave only minimum length of trench open as necessary for construction.

B. For waterlines, under pavement and to within one foot back of curb, use backfill materials described by trench limits.
   1. For water lines 20 inches in diameter and smaller, use bank run sand or select backfill materials up to pavement base or subgrade.
   2. For water lines 24 inches in diameter and larger, backfill with suitable on-site material (random backfill) up to 12 inches below pavement base or subgrade. Place minimum of 12 inches of select backfill below pavement base or subgrade.

C. For sewer pipes, use select backfill up to 12- inch backfill directly under pavement.

D. Where damage to completed pipe installation work is likely to result from withdrawal of sheeting, leave sheeting in place. Cut off sheeting 1.5 feet or more above crown of pipe. Remove trench supports within 5 feet from ground surface.

E. When shown on Drawings, random backfill of suitable material may be used in trench zone for trench excavations outside pavements.

F. Unless otherwise shown on Drawings, use one of the following trench zone backfills under pavement and too within one foot of edge of pavement. Place trench zone backfill in lifts and compact. Fully compact each lift before placement of next lift.

   1. Class I, II and III or combination thereof:
      a. Place in maximum 12-inch thick loose layers.

b. Compact by vibratory equipment to minimum of 95 percent of maximum dry density determined according to ASTM D 698.
c. Moisture content within zero percent to +5 percent of optimum determined according to ASTM D 698, unless otherwise approved by Project Manager.

2. Cement-Stabilized Sand:
   a. Maximum lift thickness determined by Contractor to achieve uniform placement and required compaction, but do not exceed 12 inches.
   b. Compact by vibratory equipment to minimum of 95 percent of maximum dry density determined according to ASTM D 558.
   c. Moisture content on dry side of optimum determined according to ASTM D 558 but sufficient for cement hydration.
3. Class IVA and IVB (Clay Soils):
   a. Place in maximum 8-inch loose lifts.
   b. Compaction by equipment providing tamping or kneading impact to minimum of 95 percent of maximum dry density determined according to ASTM D 698.
   c. Moisture content within zero percent to +5 percent above optimum determined according to ASTM D 698, unless approved by Project Manager.

G. For electric conduits, remove form work used for construction of conduits before placing trench zone backfill.

3.8 FIELD QUALITY CONTROL

A. Test for material source qualifications.

B. Provide excavation and trench safety systems at locations and to depths required for testing and retesting during construction at no additional cost to Owner.

C. Tests will be performed on minimum of three different samples of each material type for plasticity characteristics, in accordance with ASTM D 4318. Additional classification tests will be performed whenever there is noticeable change in material gradation or plasticity, or when requested by Project Manager.

D. At least three tests for moisture-density relationships will be performed initially for backfill materials in accordance with ASTM D 698, and for cement- stabilized sand in accordance with ASTM D 558. Perform additional moisture-density relationship tests once a month or whenever there is noticeable change in material gradation or plasticity.

E. In-place density tests of compacted pipe foundation, embedment and trench zone backfill soil materials will be performed according to ASTM D 1556, or ASTM D 2922 and ASTM D 3017, and at following frequencies and conditions.

1. For open cut construction projects and auger pits: Unless otherwise approved by Project Manager, successful compaction to be measured by one test per 40 linear feet measured along pipe for compacted embedment and two tests per 40 linear feet measured along pipe for compacted trench zone backfill material. Length of auger pits to be measured to arrive at 40 linear feet.
2. A minimum of three density tests for each full shift of Work.

3. Density tests will be distributed among placement areas. Placement areas are: foundation, bedding, haunching, initial backfill and trench zone.
4. The number of tests will be increased if inspection determines that soil type or moisture content are not uniform or if compacting effort is variable and not considered sufficient to attain uniform density, as specified.
5. Density tests may be performed at various depths below fill surface by pit excavation. Material in previously placed lifts may therefore be subject to acceptance/rejection.
6. Two verification tests will be performed adjacent to in-place tests showing density less than acceptance criteria. Placement will be rejected unless both verification tests show acceptable results.
7. Recompacted placement will be retested at same frequency as first test series, including verification tests.
8. Identify elevation of test with respect to natural ground or pavement.

3.9 DISPOSAL OF EXCESS MATERIAL

A. Dispose of excess materials in accordance in accordance with local requirements.

END OF SECTION 31 23 16.13

SECTION 31 41 33 – TRENCH SAFETY

PART 1 - GENERAL

1.1 SUMMARY

A. This Section includes the following:

1. Trench Safety System for the construction of trench excavations.
2. Trench Safety System for structural excavations that fall under provisions of State and Federal trench safety laws.

1.2 SUBMITTALS

A. Submit a safety program specifically for the construction of trench excavation. Design the Trench Safety Program to be in accordance with OSHA 29 CFR standards governing the presence and activities of individuals working in and around trench excavations.

B. Construction and shop drawings containing deviations from OSHA standards or special designs shall be sealed by a licensed Engineer retained and paid by Contractor.

C. Review of the safety program by the Engineer will only be in regard to compliance with this specification and will not constitute approval by the Engineer nor relieve Contractor of obligations under State and Federal trench safety laws

1.3 MEASUREMENT AND PAYMENT

A. Stipulated Price (Lump Sum). If the Contract is a Stipulated Price Contract, payment for work in this Section is included in the total Stipulated Price.

1.4 DEFINITIONS

A. A trench shall be defined as a narrow excavation (in relation to its depth) made below the surface of the ground. In general, the depth is greater than the width, but the width of a trench (measured at the bottom) is not greater than 15 feet.

B. The Trench Safety System requirements will apply to larger open excavations if the erection of structures or other installations limits the space between the excavation slope and the installation to dimensions equivalent of a trench as defined.

C. Trench Safety Systems include but are not limited to sloping, sheeting, trench boxes or trench shields, sheet piling, cribbing, bracing, shoring, dewatering or diversion of water to provide adequate drainage.

1.5 REGULATORY REQUIREMENTS

A. Install and maintain Trench Safety Systems in accordance with the detail specifications set out in the provision of Excavations, Trenching, and Shoring, Federal Occupation Safety and Health Administration (OSHA) Standards, 29 CFR, Part 1926, Subpart P, as amended, including Final Rule, published in the Federal Register Vol. 54, No. 209 on Tuesday, October 31, 1989. The sections that are incorporated into these specifications by reference include Sections 1926-650 through 1926-652.

B. A reproduction of the OSHA standards included in "Subpart P - Excavations" from the Federal Register Vol. 54, No. 209 is available upon request to Contractors bidding on Owner projects. The Owner assumes no responsibility for the accuracy of the reproduction. The Contractor is responsible for obtaining a copy of this section of the Federal Register.

C. Legislation that has been enacted by the Texas Legislature with regard to trench safety systems is hereby incorporated, by reference, into these specifications. Refer to Texas Health and Safety Code Ann., § 756.021 (Vernon 1991).

D. Reference materials, if developed for a specific project, will be issued with the Bid Documents, including the Geotechnical Report.

1.6 INDEMNIFICATION

A. Contractor shall indemnify and hold harmless the Owner, its employees and agents, from any and all damages, costs (including, without limitation, legal fees, court costs, and the cost of investigation), judgments or claims by anyone for injury or death of persons resulting from the collapse or failure of trenches constructed under this Contract.

B. Contractor acknowledges and agrees that this indemnity provision provides indemnity for the Owner in case the Owner is negligent either by act or omission in providing for trench safety, including, but not limited to safety program and design reviews, inspections, failures to issue stop work orders, and the hiring of the Contractor.

PART 2 - PRODUCTS (Not Used)

PART 3 - EXECUTION

3.1 INSTALLATION

A. Install and maintain Trench Safety Systems in accordance with provisions of OSHA 29 CFR.

B. Install specially designed Trench Safety Systems in accordance with the Contractor's trench excavation safety program for the locations and conditions identified in the program.

C. A competent person, as identified in the Contractor's trench safety program, shall verify that trench boxes and other premanufactured systems are certified for the actual installation conditions.

3.2 INSPECTION

A. Contractor, or Contractor's independently retained consultant, shall make daily inspections of the Trench Safety Systems to ensure that the installed systems and operations meet OSHA 29 CFR and other personnel protection regulations requirements.

B. If evidence of possible cave-ins or slides is apparent, Contractor shall immediately stop work in the trench and move personnel to safe locations until necessary precautions have been taken by Contractor to safeguard personnel entering the trench.

C. Maintain a permanent record of daily inspections.

3.3 FIELD QUALITY CONTROL

A. Contractor shall verify specific applicability of the selected or specially designed Trench Safety Systems to each field condition encountered on the project.

END OF SECTION 31 41 33

SECTION 31 63 29 - DRILLED CONCRETE PIERS AND SHAFTS

PART 1 - GENERAL

1.1 SUMMARY

A. Section Includes:

1. Dry-installed drilled piers.

1.2 PREINSTALLATION MEETINGS

A. Preinstallation Conference: Conduct conference at Project site.

1.3 ACTION SUBMITTALS

A. Product Data: For each type of product.

B. Design Mixtures: For each concrete mixture.

C. Shop Drawings: For concrete reinforcement.

1.4 INFORMATIONAL SUBMITTALS

A. Material certificates.

B. Material test reports.

C. Field quality-control reports.

1.5 CLOSEOUT SUBMITTALS

A. Record drawings.

1.6 QUALITY ASSURANCE

A. Welding Qualifications: Qualify procedures and personnel according to the following:

1. AWS D1.1/D1.1M, "Structural Welding Code - Steel."

1.7 FIELD CONDITIONS

A. Project-Site Information: A geotechnical report has been prepared for this Project and is available for information only. The opinions expressed in this report are those of geotechnical engineer and represent interpretations of subsoil conditions, tests, and results of analyses conducted by geotechnical engineer. Owner is not responsible for interpretations or conclusions drawn from this data.

1. Make additional test borings and conduct other exploratory operations necessary for drilled piers.
2. The geotechnical report is included elsewhere in the Project Manual.

B. Survey Work: Engage a qualified land surveyor or professional engineer to perform surveys, layouts, and measurements for drilled piers. Before excavating, lay out each drilled pier to lines and levels required. Record actual measurements of each drilled pier's location, shaft diameter, bottom and top elevations, deviations from specified tolerances, and other specified data.

1. Record and maintain information pertinent to each drilled pier and indicate on record Drawings.

PART 2 - PRODUCTS

2.1 PERFORMANCE REQUIREMENTS

A. Drilled-Pier Standard: ACI 336.1 except as modified in this Section.

2.2 STEEL REINFORCEMENT

A. Reinforcing Bars: ASTM A 615/A 615M, Grade 60, deformed.

B. Plain-Steel Wire: ASTM A 82/A 82M, as drawn.

2.3 CONCRETE MATERIALS

A. Cementitious Material: Use the following cementitious materials, of same type, brand, and source, throughout Project:

1. Portland Cement: ASTM C 150/C 150M, Type I/II. Supplement with the following:

a. Fly Ash: ASTM C 618, Class C or F.
b. Ground Granulated Blast-Furnace Slag: ASTM C 989, Grade 100 or 120.

B. Normal-Weight Aggregate: ASTM C 33/C 33M, graded, 1-inch- nominal maximum coarse-aggregate size.

1. Fine Aggregate: Free of materials with deleterious reactivity to alkali in cement.

C. Water: ASTM C 94/C 94M and potable.

D. Chemical Admixtures: Provide admixtures certified by manufacturer to be compatible with other admixtures and that do not contribute water-soluble chloride ions exceeding those permitted in hardened concrete. Do not use calcium chloride or admixtures containing calcium chloride.

1. Water-Reducing Admixture: ASTM C 494/C 494M, Type A.
2. Water-Reducing and Retarding Admixture: ASTM C 494/C 494M, Type D.
3. High-Range, Water-Reducing and Retarding Admixture: ASTM C 494/C 494M, Type G.
4. Plasticizing and Retarding Admixture: ASTM C 1017/C 1017M, Type II.

2.4 STEEL CASINGS

A. Steel Pipe Casings: ASTM A 283/A 283M, Grade C, or ASTM A 36/A 36M, carbon-steel plate, with joints full-penetration welded according to AWS D1.1/D1.1M.

2.5 CONCRETE MIXTURES AND MIXING

A. Prepare design mixtures for each type and strength of concrete, proportioned on the basis of laboratory trial mixture or field test data, or both, according to ACI 301.

B. Cementitious Materials: Limit percentage, by weight, of cementitious materials other than portland cement according to ACI 301 limits as if concrete were exposed to deicing chemicals.

C. Limit water-soluble, chloride-ion content in hardened concrete to 0.15 percent by weight of cement.

D. Proportion normal-weight concrete mixture as follows:

1. Compressive Strength (28 Days): 3500 psi.

E. Ready-Mixed Concrete: Measure, batch, mix, and deliver concrete according to ASTM C 94/C 94M, and furnish batch ticket information.

PART 3 - EXECUTION

3.1 EXCAVATION

A. Unclassified Excavation: Excavate to bearing elevations regardless of character of surface and subsurface conditions encountered.

B. Classified Excavation: Excavation is classified as standard excavation, special excavation, and obstruction removal and includes excavation to bearing elevations as follows:

1. Standard excavation includes excavation accomplished with conventional augers fitted with soil or rock teeth, drilling buckets, or underreaming tools attached to drilling equipment of size, power, torque, and downthrust necessary for the Work.

2. Special excavation includes excavation that requires special equipment or procedures where drilled-pier excavation equipment used in standard excavation, operating at maximum power, torque, and downthrust, cannot advance the shaft.
3. Obstructions: Payment for removing unanticipated boulders, concrete, masonry, or other subsurface obstructions that cannot be removed by conventional augers fitted with soil or rock teeth, drilling buckets, or underreaming tools attached to drilling equipment of size, power, torque, and downthrust necessary for the Work is according to Contract provisions for changes in the Work.

C. Excavate shafts for drilled piers to indicated elevations. Remove loose material from bottom of excavation.

D. Notify and allow testing and inspecting agency to test and inspect bottom of excavation. If unsuitable bearing stratum is encountered, make adjustments to drilled piers as determined by Architect.

1. Do not excavate shafts deeper than elevations indicated unless approved by Architect.
2. Payment for additional authorized excavation is according to Contract provisions for changes in the Work.

E. End-Bearing Drilled Piers: Probe with auger to a depth below bearing elevation, equal to diameter of the bearing area of drilled pier. Determine whether voids, clay seams, or solution channels exist.

F. Temporary Casings: Install watertight steel casings of sufficient length and thickness to prevent water seepage into shaft; to withstand compressive, displacement, and withdrawal stresses; and to maintain stability of shaft walls.

1. Remove temporary casings, maintained in plumb position, during concrete placement and before initial set of concrete.

G. Tolerances: Construct drilled piers to remain within ACI 336.1 tolerances.

3.2 INSTALLATION

A. Install steel casings of minimum wall thickness indicated and of diameter not less than diameter of drilled pier.

B. Comply with recommendations in CRSI's "Manual of Standard Practice" for fabricating, placing, and supporting reinforcement.

C. Place concrete in continuous operation and without segregation immediately after inspection and approval of shaft by a qualified Special Inspector.

D. Place concrete to fall vertically down the center of drilled pier without striking sides of shaft or steel reinforcement.

E. Coordinate withdrawal of temporary casings with concrete placement to maintain at least a 60-inch head of concrete above bottom of casing. Vibrate top 60 inches of concrete after withdrawal of temporary casing.

3.3 FIELD QUALITY CONTROL

A. Special Inspections: Owner will engage a qualified special inspector to perform the following special inspections:

1. Drilled piers.
2. Excavation.
3. Concrete.
4. Steel reinforcement.

B. Testing Agency: Owner will engage a qualified testing agency to perform tests and inspections.

C. Drilled-Pier Tests and Inspections: For each drilled pier, before concrete placement.

1. Soil Testing: Bottom elevations, bearing capacities, and lengths of drilled piers indicated have been estimated from available soil data. Actual elevations and drilled-pier lengths and bearing capacities are determined by testing and inspecting agency. Final evaluations and approval of data are determined by Architect.

D. Concrete Tests and Inspections: ACI 301.

3.4 DISPOSAL OF SURPLUS AND WASTE MATERIALS

A. Disposal: Remove surplus satisfactory soil and waste material, including unsatisfactory soil, trash, and debris, and legally dispose of it off Owner's property.

END OF SECTION 31 63 29

SECTION 32 11 13.13 – LIME TREATED SUBGRADES

PART 1 GENERAL

1.1 SUMMARY

A. This section includes the following:

1. Foundation course for paving of lime stabilized subgrade material.
2. Application of lime slurry to subgrade.
3. Mixing, compaction, and curing of lime slurry, water, and subgrade into a stabilized foundation.

1.2 SUBMITTALS

A. Submit certification that hydrated lime, quicklime, or commercial lime slurry complies with specifications.

B. Submit weight tickets, certified by supplier, with each bulk delivery of lime to work site.

1.3 MEASUREMENT AND PAYMENT

A. Stipulated Price (Lump Sum). If Contract is Stipulated Price Contract, payment for Work in this Section is included in total Stipulated Price.

1.4 DEFINITION

A. Moist Cure: Curing soil and lime to obtain optimum hydration.

1.5 REFERENCES

A. ASTM D 698 - Standard Test Method for Laboratory Compaction Characteristics of Soil Using Standard Effort (12,400 ft-lbf/ft^3 (600 kN-m/m^3).

B. ASTM D 2922 - Standard Test Methods for Density of Soil and Soil-Aggregate in Place by Nuclear Methods (Shallow Depth).

C. ASTM D 4318 - Standard Test Method for Liquid Limit, Plastic Limit, and Plasticity Index of Soils.

D. TxDOT Tex-101-E (Part III) - Preparation of Soil and Flexible Base Material for Testing.

E. TxDOT Tex-140-E - Measuring Thickness of Pavement Layer.

F. TxDOT Tex-600-J - Sampling and Testing Hydrated Lime, Quicklime, and Commercial Lime Slurry.

1.6 DELIVERY, STORAGE AND HANDLING

A. Bagged lime shall bear manufacturer's name, product identification, and certified weight. Bags varying more than 5 percent of certified weight may be rejected; average weight of 50 random bags in each shipment shall not be less than certified weight.

B. Store lime in weatherproof enclosures. Protect lime from ground dampness.

PART 2 PRODUCTS

2.1 WATER

A. Use clean, clear water, free from oil, acids, alkali, or vegetation.

2.2 LIME

A. Type A - Hydrated Lime: Dry material consisting essentially of calcium hydroxide or mixture of calcium hydroxide and an allowable percentage of calcium oxide as listed in chemical composition chart.

B. Type B - Commercial Lime Slurry: Liquid mixture consisting essentially of lime solids and water in slurry form. Water or liquid portion shall not contain dissolved material in sufficient quantity to be injurious or objectionable for purpose intended.

C. Type C - Quicklime: Dry material consisting essentially of calcium oxide. Furnish quicklime in either of the following grades:

1. Grade DS: Pebble quicklime of gradation suitable for use in preparation of slurry for wet placing.

2. Grade S: Finely-graded quicklime for use in preparation of slurry for wet placing. Donor use grade S quicklime for dry placing.

D. Conform to the following requirements:

CHEMICAL COMPOSITION	TYPE		
	A	B	C
Active lime content, % by weight $Ca(OH)_2$+CaO	90.0 min[1]	87.0 min[2]	-
Unhydrated lime content, % by weight CaO	5.0 max	-	87.0 min

Free water content, % by weight H_2O :	5.0 max	-	-
SIZING Wet Sieve, as % by weight residue retained:			
No. 6	0.2 max	0.2 max[2]	8.0 max[3]
No. 30	4.0 max	4.0 max[2]	-
Dry sieve, as % by weight residue retained:			
1-inch	-	-	0.0
1/2-inch	-	-	10.0 max

Notes:
1. Maximum 5.0% by weight CaO shall be allowed in determining total active lime content.
2. Maximum solids content of slurry.
3. Total active lime content, as CaO, in material retained on No. 6 sieve shall not exceed 2.0% by weight of original Type C lime.

E. Deliver lime slurry to job site as commercial lime, or prepare at job site by using hydrated lime or quicklime. Provide slurry free of liquids other than water and of consistency that can be handled and uniformly applied without difficulty.

F. Lime containing magnesium hydroxide is prohibited.

2.3 SOIL

A. Soil to receive lime treatment may include borrow or existing subgrade material, existing pavement structure, or combination of all three. Where existing pavement or base material is encountered, pulverized or scarify material so that 100 percent of sampled material passes 2-inch sieve.

PART 3 **EXECUTION**

3.1 EXAMINATION

A. Verify compacted subgrade will support imposed loads.

B. Verify subgrade lines and grades.

3.2 PREPARATION

A. Complete backfill of utilities prior to stabilization.

B. Cut material to bottom of subgrade using an approved cutting and pulverizing machine meeting following requirements:

1. Cutters accurately provide smooth surface over entire width of cut to plane of secondary grade.

2. Provide cut to depth as specified or shown in the Drawings.

C. Alternatively, scarify or excavate to bottom of stabilized subgrade. Remove material or windrow to expose secondary grade. Obtain uniform stability.

D. Correct wet or unstable material below secondary grade by scarifying, adding lime, and compacting as directed by Project Manager.

E. Pulverize existing material so that 100 percent passes a 1-3/4-inch sieve.

3.3 LIME SLURRY APPLICATION

A. Apply slurry with distributor truck equipped with an agitator to keep lime and water in consistent mixture. Make successive passes over measured section of roadway to attain proper moisture and lime content. Limit spreading to an area where preliminary mixing operations can be completed on same working day.

B. Minimum lime content shall be 5 percent of dry unit weight of subgrade as determined by ASTM D 698

3.4 PRELIMINARY MIXING

A. Use approved single-pass or multiple-pass rotary speed mixers to mix soil, lime, and water to required depth. Obtain homogeneous friable mixture free of clods and lumps.

B. Shape mixed subgrade to final lines and grades.

C. Eliminate following operations and final mixing if pulverization requirements of Paragraph 3.05C can be met during preliminary mixing:

1. Seal subgrade as precaution against heavy rainfall by rolling lightly with light pneumatic rollers.

2. Cure soil lime material for 24 to 72 hours or as required to obtain optimum hydration. Keep subgrade moist during cure.

3.5 FINAL MIXING

A. Use approved single-pass or multiple-pass rotary speed mixers to uniformly mix cured soil and lime to required depth.

B. Add water to bring moisture content of soil mixture to optimum or above.

C. Mix and pulverize until all material passes 13/4-inch sieve; minimum of 85 percent, excluding non-slacking fractions, passes 3/4-inch sieve; and minimum of 60 percent excluding non-slacking fractions passes No. 4 sieve. Test according to TxDOT Tex-101-E, Part III using dry method.

D. Shape mixed subgrade to final lines and grades.

E. Do not expose hydrated lime to open air for 6 hours or more during interval between application and mixing. Avoid excessive hydrated lime loss due to washing or blowing.

3.6 COMPACTION

A. Aerate or sprinkle to attain optimum moisture content to 3 percent above optimum, as determined by ASTM D 698 on material sample from roadway after final mix with lime.

B. Start compaction immediately after final mixing.

C. Spread and compact in two or more equal layers where total compacted thickness is greater than equipment manufacturer's recommended range of mixing and compaction.

D. Compact with approved heavy pneumatic or vibrating rollers, or combination of tamping rollers and light pneumatic rollers. Begin compaction at bottom and continue until entire depth is uniformly compacted.

E. Do not allow stabilized subgrade to mix with underlying material. Correct irregularities or weak spots immediately by replacing material and recompacting.

F. Compact subgrade to minimum density of 95 percent of maximum dry density, according to ASTM D 698, at moisture content of optimum to 3 percent above optimum, unless otherwise indicated on Drawings:

G. Seal with approved light pneumatic tired rollers. Prevent surface hair line cracking. Rework and recompact at areas where hairline cracking develops.

3.7 CURING

A. Moist cure for minimum of 3 days before placing base or surface course, or opening to traffic. Subgrade may be opened to traffic after 2 days when adequate strength has been attained to prevent damage. Restrict traffic to light pneumatic rollers or vehicles weighing less than 10 tons.

B. Keep subgrade surface damp by sprinkling. Roll with light pneumatic roller to keep surface knit together.

C. Place base or surface within 14 days after final mixing and compaction. Restart compaction and moisture content of base material when time is exceeded.

3.8 TOLERANCES

A. Completed surface: smooth and conforming to typical section and established lines and grades.

B. Top of compacted surface: Plus or minus 1/4 inch in cross section or in 16-foot length.

C. Depth of lime stabilization shall be plus or minus one inch of specified depth for each 1000-foot roadway section.

3.9 PROTECTION

A. Maintain stabilized subgrade to lines and grades and in good condition until placement of base or surface course. Protect asphalt membrane from being picked up by traffic.

B. Repair defects immediately by replacing material to full depth.

END OF SECTION 32 11 13.13

SECTION 32 13 13 – CONCRETE PAVING

PART 1 G E N E R A L

1.01 SECTION INCLUDES

A. Portland cement concrete paving.

1.02 MEASUREMENT AND PAYMENT

A. Stipulated Price (Lump Sum). If Contract is Stipulated Price Contract, payment for Work in this Section is included in total Stipulated Price.

1.03 REFERENCES

A. ASTM A 82 - Standard Specification for Steel Wire, Plain, for Concrete Reinforcement.

B. ASTM A 185 - Standard Specifications for Steel Welded Wire Fabric, Plain, for Concrete Reinforcement.

C. ASTM A 615 - Standard Specification for Deformed and Plain Billet - Steel Bars for Concrete Reinforcement.

D. ASTM C 31 - Standard Practice for Making and Curing Concrete Test Specimens in the Field.

E. ASTM C 33 - Standard Specifications for Concrete Aggregates.

F. ASTM C 39 - Standard Test Method for Compressive Strength of Cylindrical Concrete Specimens.

G. ASTM C 40 - Standard Test Method for Organic Impurities in Fine Aggregates for Concrete.

H. ASTM C 42 - Standard Test Method of Obtaining and Testing Drilled Cores and Sawed Beams of Concrete.

I. ASTM C 78 - Standard Test Method for Flexural Strength of Concrete (Using Simple Beam with Third Point Loading).

J. ASTM C 94 - Standard Specification for Ready-Mixed Concrete.

K. ASTM C 131 - Standard Test Method for Resistance to Degradation of Small-Size Coarse Aggregate by Abrasion and Impact in the Los Angeles Machine.

L. ASTM C 136 - Standard Method for Sieve Analysis of Fine and Coarse Aggregates.

M. ASTM C 138 - Standard Test Method for Unit Weight, Yield, and Air Content (Gravimetric) of Concrete.

N. ASTM C 143 - Standard Test Method for Slump of Hydraulic Cement Concrete.

O. ASTM C 150 - Standard Specification for Portland Cement.

P. ASTM C 174 - Standard Test Method for Measuring Thickness of Concrete Elements Using Drilled Concrete Cores.

Q. ASTM C 231 - Standard Test Method for Air Content of Freshly Mixed Concrete by the Pressure Method.

R. ASTM C 260 - Standard Specification for Air-Entraining Admixtures for Concrete.

S. ASTM C 494 - Standard Specification for Chemical Admixtures for Concrete.

T. ASTM C 618 - Standard Specification for Coal Fly Ash and Raw or Calcined Natural Pozzolan for use as a Mineral Admixture in Portland Cement Concrete.

1.04 SUBMITTALS

A. Submit proposed mix design and test data for each type and strength of concrete in Work. Include proportions and actual flexural strength obtained from design mixes at required test ages.

B. Submit for approval manufacturer's description and characteristics for mixing equipment, and for traveling form paver, when proposed for use.

C. Submit manufacturer's certificates giving properties of reinforcing steel. Include certificate of compliance with ASTM A 82.

1.05 HANDLING AND STORAGE

A. Comply with Section 01 60 00 – Product Requirements.

B. Do not mix different classes of aggregate without written permission of Engineer.

C. Class of aggregate being used may be changed before or during Work with written permission of Engineer. Comply new class with specifications.

D. Reject segregated aggregate. Before using aggregate whose particles are separated by size, mix them uniformly to grading requirements.

E. Reject aggregates mixed with dirt, weeds, or foreign matter.

PART 2 P R O D U C T S

2.01 MATERIALS

A. Portland Cement:
1. Sample and test cement to verify compliance with Standards of ASTM C 150, Type I or

Type III.

2. Bulk cement which meets referenced standards may be used when method of handling is approved by Engineer. When using bulk cement, provide satisfactory weighing devices.
3. Fly ash which meets standards of ASTM C 618 may be used as mineral fill when method of handling is approved by Engineer.

B. Water: Conform to requirements for water in ASTM C 94.

C. Coarse Aggregate: Crushed stone, gravel, or combination thereof, which is clean, hard, and durable, conforms to requirements of ASTM C 33, and has abrasion loss not more than 45 percent by weight when subjected to Los Angeles Abrasion Test (ASTM C 131).

1. Maximum percentage by weight of deleterious substances shall not exceed following values:

Item	Percent by Weight of Total Sample Maximum
Clay lumps and friable particles	3.0
Material finer than 75-µm (No. 200) sieve:	
Concrete subject to abrasion	3.0*
All Other concrete	5.0*
Coal and lignite:	
Where surface appearance of concrete is of importance	0.5
All other concrete	1.0

* In case of manufactured sand, when material finer than 75-µm (No. 200) sieve consists of dust of fracture, essentially free from clay or shale, these limits may be increased to 5 and 7 percent, respectively.

2. Conform coarse aggregate (size 1 1/2 inch to No. 4 sieve) to requirements of ASTM C 33. Use gradation within following limits when graded in accordance with ASTM C 136:

Sieve Designation (Square Openings)	Percentage by Weight
Retained on 1 3/4" sieve	0
Retained on 1 1/2"sieve	0 to 5
Retained on 3/4" sieve	30 to 65
Retained on 3/8" sieve	70 to 90
Retained on No. 4 sieve	95 to 100

D. Fine Aggregate: Sand, manufactured sand, or combination thereof, composed of clean, hard, durable, uncoated grains, free from loams or other injurious foreign matter. Conform fine aggregate for concrete to requirements of ASTM C 33. Use gradation within following limits when graded in accordance with ASTM C 136:

Sieve Designation (Square Openings)	Percentage by Weight

Retained on 3/8" sieve	0
Retained on No. 4 sieve	0 to 5
Retained on No. 8 sieve	0 to 20
Retained on No. 16 sieve	15 to 50
Retained on No. 30 sieve	35 to 75
Retained on No. 50 sieve	65 to 90
Retained on No. 100 sieve	90 to 100
Retained on No. 200 sieve	97 to 100

1. When subjected to color test for organic impurities (ASTM C 40), fine aggregate shall not show color darker than standard color. Fine aggregate shall be subjected to Sand Equivalent Test (Tex-203-F). Sand equivalent value shall not be less than 80, unless higher value is shown on Drawings.

E. Mineral Filler: Type “C” or Type “F” fly ash of acceptable quality and meeting requirements of ASTM C 618 may be used as mineral admixture in concrete mixture. When fly ash mineral filler is used, store and inspect in accordance with ASTM C 618. Do not use fly ash in amounts to exceed 25 percent by weight of cementatious material in mix design. Cement content may be reduced when strength requirements can be met. Note: When fly ash is used, term "cement" is defined as cement plus fly ash.

F. Air Entraining Agent: Furnish air entraining agent conforming to requirements of ASTM C 260.

G. Water Reducer: Water reducing admixture conforming to requirements of ASTM C 494 may be used when required to improve workability of concrete. Amount and type of admixture is subject to approval by Engineer.

H. Reinforcing Steel:
1. Provide new billet steel manufactured by open hearth process and conforming to ASTM A 615, Grade 60. Store steel to protect it from mechanical injury and rust. At time of placement, steel shall be free from dirt, scale, rust, paint, oil, or other injurious materials.
2. Cold bend reinforcing steel to shapes shown. Once steel has been bent, it may not be rebent.
3. Provide wire fabric conforming to ASTM A 82. Use fabric in which longitudinal and transverse wires have been electrically welded at points of intersection. Welds shall have sufficient strength not to be broken during handling or placing. Conform welding and fabrication of fabric sheets to ASTM A 185.

I. Porous Concrete Pavement consists of four layers.
1. *Porous Concrete Layer – The porous concrete layer consists of an open-graded concrete mixture 4* inch depth. Porous concrete can be assumed to contain 18 percent voids (porosity = 0.18). The omission of the fine aggregate provides the porosity of the porous pavement. Aggregate (size 3/8 inch to No. 4 sieve) to requirements of ASTM C 33. Use gradation within following limits when graded in accordance with ASTM C 136:

Sieve Designation (Square Openings)	Percentage by Weight

Retained on 3/8" sieve	0 to 5
Retained on No. 4 sieve	70 to 100
Retained on No. 8 sieve	95 to 100
Retained on No. 16 sieve	100

2. *Top Filter Layer* – Consists of a 0.5 inch diameter crushed stone to a depth of 2 inches.
3. *Reservoir Layer* – The reservoir gravel base course consists of washed, bank-run gravel, 1.5 to 2.5 inches in diameter with a void space of 40%.
4. *Bottom Filter Layer* – Provide on the surface of the subgrade a minimum of 1 inch layer of Fine Sand, and be completely flat to promote infiltration across the entire surface.
5. *Filter Fabric* – Provide Filter Fabric in accordance with Section 01 57 13 – Storm Water Pollution Control.

2.02 EQUIPMENT

A. Conform Equipment to requirements of ASTM C 94.

2.03 MIXING

A. Flexural strength shall be as specified using test specimens prepared in accordance with ASTM C 31 and tested in accordance with ASTM C78 (using simple beam with third-point loading). Compressive strength shall be as specified using test specimens prepared in accordance with ASTM C 31 and tested in accordance with ASTM C 39. Determine and measure batch quantity of each ingredient, including water for batch designs and all concrete produced for Work. Mix shall conform to these specifications and other requirements indicated on Drawings.

B. Mix design to produce concrete which will have flexural strength of 500 psi at 7 days and 600 psi at 28 days. Slump of concrete shall be at least 2 inches but no more than 5 inches, when tested in accordance with ASTM C 143.
   1. Concrete pavement, including curb, curb and gutter, and saw-tooth curb, shall contain at least 5 1/2 sacks (94 pounds per sack) of cement per cubic yard, with not more than 6.5 gallons of water, net, per sack of cement (water-cement ratio maximum 0.57). Determine cement content in accordance with ASTM C 138. Addition of mineral filler may be used to improve workability or plasticity of concrete to limits specified.
   2. Coarse dry aggregate shall not exceed 85 percent of loose volume of concrete.
   3. Add air-entraining admixture to ensure uniform distribution of agent throughout batch. Base air content of freshly mixed air-entrained concrete upon trial mixes with materials to be used in Work, adjusted to produce concrete of required plasticity and workability. Percentage of air entrainment in mix shall be 4 1/2 percent plus or minus 1 1/2 percent. Determine air content by testing in accordance with ASTM C 231.
   4. Use retardant when temperature exceeds 90 degrees F. Proportion as recommended by manufacturer. Use same brand as used for air-entraining agent. Add and batch material using same methods as used for air-entraining agent.

C. Use high early strength concrete pavement to limits shown on Drawings. Design to meet following:
   1. Concrete Mix: Flexural strength greater than or equal to 500 psi at 72 hours.

2. Cement: Minimum of 7 sacks of cement per cubic yard of concrete.
3. Water-Cement Ratio maximum of 0.45. Slump of concrete shall a maximum of 5 inches, when tested in accordance with ASTM C 143.
4. Other requirements for proportioning, mixing, execution, testing, etc., shall be in accordance with this Section 32 13 13 – Concrete Paving.

PART 3 E X E C U T I O N

3.01 EXAMINATION

A. Verify compacted base is ready to support imposed loads and meets compaction requirements.

B. Verify lines and grades are correct.

3.02 PREPARATION

A. Properly prepare, shape and compact each section of subgrade before placing forms, reinforcing steel or concrete. After forms have been set to proper grade and alignment, use subgrade planer to shape subgrade to its final cross section. Check contour of subgrade with template.

B. Remove subgrade that will not support loaded form. Replace and compact subgrade to required density.

3.03 EQUIPMENT

A. Alternate equipment and methods, other than those required by this Section, may be used provided equal or better results will be obtained. Maintain equipment for preparing subgrade and for finishing and compacting concrete in good working order.

B. Subgrade Planer and Template:

1. Use subgrade planer with adjustable cutting blades to trim subgrade to exact section shown on Drawings. Select planer mounted on visible rollers which ride on forms. Planer frame must have sufficient weight so that it will remain on form, and have strength and rigidity that, under tests made by changing support from wheels to center, planer will not develop deflection of more than 1/8 inch. Tractors used to pull planer shall not produce ruts or indentations in subgrade. When slip form method of paving is used, operate subgrade planer on prepared track grade or have it controlled by electronic sensor system operated from string line to establish horizontal alignment and elevation of subbase.

2. Provide template for checking contour of subgrade. Template shall be long enough to rest upon side forms and have strength and rigidity that, when supported at center, maximum deflection shall not exceed 1/8 inch. Fit template with accurately adjustable rods projecting downward at 1 foot intervals. Adjust these rods to gauge cross sections of

slab bottom when template is resting on side forms.

C. Machine Finisher: Provide power-driven, transverse finishing machine designed and operated to strike off and consolidate concrete. Machine shall have two screeds accurately adjusted to crown of pavement and with frame equipped to ride on forms. Use finishing machine with rubber tires when it operates on concrete pavement.

D. Hand Finishing:
1. Provide mechanical strike and tamping template 2 feet longer than width of pavement to be finished. Shape template to pavement section.
2. Provide two bridges to ride on forms and span pavement for finishing expansion and dummy joints. Provide floats and necessary edging and finishing tools.

E. Burlap Drag or transverse broom for Finishing Slab: Furnish four plies of 10 ounce burlap material fastened to bridge to form continuous strip of burlap full width of pavement. Maintain contact 3 foot width of burlap material with pavement surface. Keep burlap drags clean and free of encrusted mortar.

F. Vibrators: Furnish mechanically-operated, synchronized vibrators mounted on tamping bar which rides on forms and hand-manipulated mechanical vibrators. Furnish vibrators with frequency of vibration to provide maximum consolidation of concrete without segregation.

G. Traveling Form Paver: Approved traveling form paver may be used in lieu of construction methods employing forms, consolidating, finishing and floating equipment. Meet requirements of this specification for subgrade, pavement tolerances, pavement depth, alignments, consolidation, finishing and workmanship. When traveling form paver does not provide concrete paving that meets compaction, finish, and tolerance requirements of this Specification, immediately discontinue its use and use conventional methods.
1. Equip traveling paver with longitudinal transangular finishing float adjustable to crown and grade. Use float long enough to extend across pavement to side forms or edge of slab.
2. Ensure that continuous deposit of concrete can be made at paver to minimize starting and stopping. Use conventional means of paving locations inaccessible to traveling paver, or having horizontal or vertical curvature that traveling paver cannot negotiate.
3. Where Drawings require tie bars for adjacent paving, securely tie and support bars to prevent displacement. Tie bars may be installed with approved mechanical bar inserter mounted on traveling-form paver. Replace pavement in which tie bars assume final position other than that shown on Drawings.

3.04 FORMS

A. Side Forms: Use metal forms of approved shape and section. Preferred depth of form is equal to required edge thickness of pavement. Forms with depths greater or less than required edge thickness of pavement will be permitted, provided difference between form depth and edge thickness when not greater than 1 inch, and further provided that forms of depth less than pavement edge are brought to required edge thickness by securely attaching wood or metal strips to bottom of form, or by grouting under form. Bottom flange of form shall be same size as thickness of pavement. Aluminum forms are not allowed. Forms shall be approved by Engineer. Length of form sections shall be not less than 10 feet and each section

shall provide for staking in position with not less than 3 pins. Flexible or curved forms of wood or metal of proper radius shall be used for curves of 200 foot radius or less. Forms shall have ample strength and shall be provided with adequate devices for secure setting so that when in-place they will withstand, without visible springing or settlement, impact and vibration of finishing machine. In no case shall base width be less than 8 inches for form 8 inches or more in height. Forms shall be free from warp, bends or kinks and shall be sufficiently true to provide straight edge on concrete. Top of each form section, when tested with straight edge, shall conform to requirements specified for surface of completed pavement. Provide sufficient forms for satisfactory placement of concrete. For short radius curves, forms less than 10 feet in length or curved forms may be used. For curb returns, wood forms of good grade and quality may be used.

B. Form Setting:
1. Rest forms directly on subgrade. Do not shim with pebbles or dirt. Accurately set forms to required grade and alignment and, during entire operation of placing, compacting and finishing of concrete, do not deviate from this grade and alignment more than 1/8 inch in 10 feet of length. Do not remove forms for at least 8 hours after completion of finishing operations. Provide supply of forms that will be adequate for orderly and continuous placing of concrete. Set forms and check grade for at least 300 feet ahead of mixer or as approved by Engineer.
2. Adjacent slabs may be used instead of forms, provided that concrete is well protected from possible damage by finishing equipment. Do not use adjacent slabs for forms until concrete has aged at least 7 days.

3.05 REINFORCING STEEL AND JOINT ASSEMBLIES

A. Place reinforcing steel and joint assemblies and position securely as indicated on Drawings. Wire reinforcing bars securely together at intersections and splices. Bars and coatings shall be free of rust, dirt or other foreign matter when concrete is placed. Secure reinforcing steel to chairs.

B. Position pavement joint assemblies at required locations and elevations, and rigidly secure in position. Install dowel bars in joint assemblies, each parallel to pavement surface and to center line of pavement, as shown.

C. Cut header boards, joint filler, and other material used for forming joints to receive each dowel bar.

D. Secure in required position to prevent displacement during placing and finishing of concrete.

E. Drill dowels into existing pavement, secure with epoxy, and provide paving headers as required to provide rigid pavement sections.

F. Use sufficient number of chairs for steel reinforcement bars to maintain position of bars within allowable tolerances. Place reinforcement as shown on Drawings. In plane of steel parallel to nearest surface of concrete, bars shall not vary from plan placement by more than 1/12 of spacing between bars. In plane of steel perpendicular to nearest surface of concrete, bars shall not vary from plan placement by more than 1/4 inch.

3.06 PLACEMENT

A. Place concrete when air temperature taken in shade and away from artificial heat is above 35 degrees F and rising. Do not place concrete when temperature is below 40 degrees F and falling.

B. Place concrete within 90 minutes after initial water had been added. Remove and dispose of concrete not placed within this period.

C. Concrete slump during placement shall be 1 to 5 inches, except when using traveling-form paver, slump shall be maximum of 2 inches.

D. Deposit concrete continuously in successive batches. Distribute concrete in manner that will require as little rehandling as possible. Where hand spreading is necessary, distribute concrete with shovels or by other approved methods. Use only concrete rakes in handling concrete. At placement interruption of more than 30 minutes, place transverse construction joint at stopping point. Remove and replace sections less than 10 feet long.

E. Take special care in placing and spading concrete against forms and at longitudinal and transverse joints to prevent honeycombing. Voids in edge of finished pavement will be cause for rejection.

3.07 COMPACTION

A. Consolidate concrete using mechanical vibrators as specified herein. Extend vibratory unit across pavement, not quite touching side forms. Space individual vibrators at close enough intervals to vibrate and consolidate entire width of pavement uniformly. Mount mechanical vibrators to avoid contact with forms, reinforcement, transverse or longitudinal joints.

B. Furnish enough hand-manipulated mechanical vibrators for proper consolidation of concrete along forms, at joints and in areas not covered by mechanically controlled vibrators.

3.08 FINISHING

A. Finish concrete pavement with power-driven transverse finishing machines or by hand finishing methods.
   1. Hand finish with mechanical strike and tamping template in same width as pavement to be finished. Shape template to pavement section shown on Drawings. Move strike template forward in direction of placement, maintaining slight excess of material in front of cutting edge. Make minimum of two trips over each area. Screed pavement surface to required section. Work screed with combined transverse and longitudinal motion in direction work is progressing. Maintain screed in contact with forms. Use longitudinal float to level surface.

B. On narrow strips and transitions, finish concrete pavement by hand. Thoroughly work concrete around reinforcement and embedded fixtures. Strike off concrete with strike-off screed. Move strike-off screed forward with combined transverse and longitudinal motion in direction work is progressing, maintaining screed in contact with forms, and maintaining slight excess of materials in front of cutting edge. Tamp concrete with tamping template.

Use longitudinal float to level surface.

C. After completion of straightedge operation, make first pass of burlap drag or transverse broom as soon as construction operations permit and before water sheen has disappeared from surface. Follow with as many passes as required to produce desired texture depth. Permit no unnecessary delays between passes. Keep drag wet, clean and free from encrusted mortar during use.

3.09 JOINTS AND JOINT SEALING

A. Conform joint sealants to one of sealant classes described in this section.

B. Two-component Synthetic Polymer.
1. Curing is to be by polymerization and not by evaporation of solvent or fluxing of harder particles.
2. Cure sufficiently at average temperature of 25 ∀ 1 C (77 ∀ 2 F) so as not to pick up under wheels of traffic in maximum three hours.
3. Performance requirements, when tested in accordance with TxDOT Tex-525-C, shall meet above curing times and requirements as follows:

Cold-Extruded and Cold-Pourable (Self-Leveling) Specifications	
Property	**Requirement**
Penetration, 25 C (77 F) 150 g Cone, 5 s, 0.1 mm (in.), maximum	130
Bond and Extension 50%, -29 C (-20 F), 3 cycles: X Dry Concrete Block X Steel blocks (Primed, if recommended by manufacturer) *Steel blocks shall be used when armor joints are specified	 Pass Pass
Flow at 70 C (158 F)	None
Water content % by mass, maximum	5.0
Resilience: X Original sample, % min. (cured) X Oven-aged at 70 C (158 F), % min.	 50 50
Cold-extruded material only - Cold Flow (10 minutes)	None

After bond and extension test, there shall be no evidence of cracking, separation or other opening that is over 3 millimeters (1/8 inch) deep in sealer or between sealer and test blocks.
4. Provide cold-extruded type for vertical or sloping joints.
5. Provide self-leveling type for horizontal joints.

C. Self-Leveling, Low Modulus Silicone or Polyurethane Sealant for Asphaltic Concrete and Portland Cement Concrete Joints. This shall be a single component self-leveling silicone or

polyurethane material that is compatible with both asphalt and concrete pavements. The sealer shall not require a primer for bond; a backer rod shall be required which is compatible with the sealant; no reaction shall occur between rod and sealant.

3.10 CONCRETE CURING

A. Conform curing materials to one of the following:
1. Polyethylene Film: Opaque pigmented white film conforming to requirements of ASTM C 171.
2. Waterproofed Paper: Paper conforming to requirements of ASTM C 171.
3. Cotton Mats: Single layer of cotton filler completely enclosed in cover of cotton cloth. Mats shall contain not less than 3/4 of a pound of uniformly distributed cotton filler per square yard of mat. Cotton cloth used for covering materials shall weigh not less than 6 ounces per square yard. Stitch mats so that mat will contact surface of pavement at all points when saturated with water.

B. Conform liquid membrane-forming compounds to ASTM C 309. Membrane shall restrict loss of water to not more than 0.55 kg/m^2 in 72 hours using test method ASTM C 156.

3.11 TOLERANCES

A. Test entire surface before initial set and correct irregularities or undulations. Bring surface within requirements of following test and then finish. Place 10 foot straightedge parallel to center of roadway to bridge depressions and touch high spots. Do not permit ordinates measured from face of straight edge to surface of pavement to exceed 1/16 inch per foot from nearest point of contact. Maximum ordinate with 10 foot straightedge shall not exceed 1/8 inch. Grind spots in excess of required tolerances to meet surface test requirements. Restore texture by grooving concrete to meet surface finishing specifications.

3.12 FIELD QUALITY CONTROL

A. Perform testing per Testing Laboratory Services requirements.

B. Compressive Strength Test Specimens: Make four test specimens for compressive strength test in accordance with ASTM C 31 for each 150 cubic yards or less of pavement that is placed in one day. Test two specimens at 7 days or at number of hours as directed by the Engineer for high early strength concrete. Test remaining two specimens at 28 days. Test specimens in accordance with ASTM C 39. Minimum compressive strength shall be 3000 pounds per square inch for first two specimens and 3500 pounds per square inch at 28 days.

C. When compressive test indicates failure, make yield test in accordance with ASTM C 138 for cement content per cubic yard of concrete. When cement content is found to be less than that specified per cubic yard, increase batch weights until amount of cement per cubic yard of concrete conforms to requirements.

D. Minimum of one 4 inch core will be taken at random locations per 375 feet per 12 feet lane or 500 square yards of pavement to measure in-place depth. Measure depth in accordance with ASTM C 174. Each core may be tested for 28 day compressive strength according to methods of ASTM C 42. 28 day compressive strength of each core tested shall be a

minimum of 3000 pounds per square inch.

E. Request, at option, three additional cores in vicinity of cores indicating nonconforming in-place depths at no cost to Owner. In-place depth at these locations shall be average depth of four cores.

F. Fill cores and density test sections with new concrete paving or non shrink grout.

3.13 NONCONFORMING PAVEMENT

A. Remove and replace areas of pavement found deficient in thickness by more than 10 percent, or that fail compressive strength tests, with concrete of thickness shown on Drawings.

B. When measurement of any core is less than specified thickness by more than 10 percent, actual thickness of pavement in this area will be determined by taking additional cores at 10 foot intervals parallel to centerline in each direction from deficient core until, in each direction, core is taken which is not deficient by more than 10 percent. Exploratory cores for deficient thickness will not be used in averages for adjusted unit price. Exploratory cores are to be used only to determine length of pavement in unit that is to be removed and replaced. Replace nonconforming pavement sections at no additional cost to Owner.

3.14 PROTECTION

A. Barricade pavement section to prevent use until concrete has attained minimum design strength. Cure barricade pavement section for minimum 72 hours before use. Do not open pavement to traffic until concrete is at least 10 days old.

B. On those sections of pavement to be opened to traffic, seal joints, clean pavement, and place earth against pavement edges before permitting use by traffic. Opening of pavement to traffic shall not relieve responsibility for Work.

C. Repair defects by replacing concrete to full depth.

END OF SECTION 32 13 13

SECTION 32 13 14 - CONCRETE SIDEWALKS

PART 1 G E N E R A L

1.01 SECTION INCLUDES

A. Reinforced concrete sidewalks.

B. Wheelchair ramps.

C. Reinforced concrete trails.

1.02 REFERENCES

A. ASTM C 31 - Standard Practice for Making and Curing Concrete Test Specimens in Field.

B. ASTM C 39 - Standard Test Method for Compressive Strength of Cylindrical Concrete Specimens.

C. ASTM C 42 - Test Method for Obtaining and Testing Drilled Cores and Sawed Beams of Concrete.

D. ASTM C 138 - Standard Test Method for Unit Weight, Yield, and Air Content (Gravimetric) of Concrete.

E. ASTM C 143 - Standard Test Method for Slump of Hydraulic Cement Concrete.

F. ASTM C 172 - Standard Practice for Sampling Freshly Mixed Concrete.

G. ASTM D 698 - Standard Test Methods for Laboratory Compaction Characteristics of Soil Using Standard Effort (12,400 ft-lbf/ft^3 (600 kN-m/m^3).

H. Texas Accessibility Standards of Architectural Barriers Act, Article 9102, Texas Civil Statues.

1.04 SUBMITTALS

A. Submit certified testing results and certificates of compliance.

PART 2 P R O D U C T S

2.01 MATERIALS

A. Concrete: Conform to material and proportion requirements for concrete of Section 33 05 10 - Concrete Paving.

B. Reinforcing Steel: Conform to material requirements of Section 33 05 10 - Concrete Paving for

reinforcing steel. Use No. 3 reinforcing bars.

C. Preformed Expansion Joint Material: Conform to material requirements for preformed expansion joint material of Section 32 13 13 - Concrete Paving.

D. Expansion Joint Filler: Conform to material requirements for expansion joint material of Section 32 13 13 - Concrete Paving.

E. Forms: Use straight, unwarped wood or metal forms with nominal depth equal to or greater than proposed sidewalk thickness. The use of 2 inch by 4 inch lumber as forms will not be allowed.

F. Sand Bed: Conform to material requirements for bank run sand of Section 31 23 16.13-Excavation and Backfill for Utilities.

G. Coloring for wheelchair ramps: Conform to TDLR requirements. Color shall be Black or as shown on the drawings.

PART 3 E X E C U T I O N

3.01 REPLACEMENT

A. Replace sidewalks which are removed or damaged during construction with thickness and width equivalent to one removed or damaged, unless otherwise shown on Drawings. Finish surface (exposed aggregate, brick pavers, etc.) to match existing sidewalk.

B. Provide replaced and new sidewalks with wheelchair ramps when sidewalk intersects curb at street or driveway.

3.02 PREPARATION

A. Identify and protect utilities which are to remain.

B. Protect living trees, other plant growth, and features designated to remain.

C. Conduct clearing and grubbing operations in accordance with Section 31 10 00 – Site Clearing

D. Excavate subgrade 6 inches beyond outside lines of sidewalk. Shape to line, grade and cross section. For soils with plasticity index above 40 percent, stabilize soil with lime in accordance with Section 31 32 13 – Lime-Stabilized Subgrade. Compact subgrade to minimum of 90 percent maximum dry density at optimum to 3 percent above optimum moisture content, as determined by ASTM D 698.

E. Immediately after subgrade is prepared, cover with compacted sand bed to depth as shown on Drawings. Lay concrete when sand is moist but not saturated.

3.03 PLACEMENT

A. Setting Forms: Straight, unwarped wood or metal forms with nominal depth equal to or greater than proposed sidewalk thickness. Use of 2 by 4's as forms will not be allowed. Securely stake forms to line and grade. Maintain position during concrete placement.

B. Reinforcement:
1. Install reinforcing bars.
2. Install reinforcing steel as shown on the drawings. Lay longitudinal bars in walk continuously, except through expansion joints.
3. Use sufficient number of chairs to support reinforcement in manner to maintain reinforcement in center of slab vertically during placement.
4. Drill dowels into existing paving, sidewalk and driveways, secure with epoxy, and provide headers as required.
5. Use sufficient number of chairs for steel reinforcement bars to maintain position of bars within allowable tolerances. Place reinforcement as shown on Drawings. In plane of steel parallel to nearest surface of concrete, bars shall not vary from plan placement by more than 1/12 of spacing between bars. In plane of steel perpendicular to nearest surface of concrete, bars shall not vary from plan placement by more than 1/4 inch.

C. Expansion Joints: Install expansion joints with load transfer units in accordance with Section 32 13 13 - Concrete Paving.

E. Place concrete in forms to specified depth and tamp thoroughly with "jitterbug" tamp, or other acceptable method. Bring mortar to surface.

F. Strike off to smooth finish with wood strike board. Finish smoothly with wood hand float. Brush across sidewalk lightly with fine-haired brush.

G. Apply coating to trail with color in accordance with Section 32 18 23.39 – Rubberized Running Track Surface Coating System.

H. Unless otherwise indicated on Drawings, mark off sidewalk joints 1/8 inch deep, at spacing equal to width of walk. Use joint tool equal in width to edging tool.

I. Finish edges with tool having 1/4 inch radius.

J. After concrete has set sufficiently, refill space along sides of sidewalk to one-inch from top of walk with suitable material. Tamp until firm and solid, place sod as applicable. Dispose of excess material in accordance with Section 01 74 19 – Construction Waste Management and Disposal. Repair driveways, sidewalks and parking lots damaged by sidewalk excavation in accordance with Section 33 13 13 – Concrete Paving.

3.04 CURING

A. Conform to requirements of Section 32 13 13 - Concrete Paving.

3.05 FIELD QUALITY CONTROL

A. Testing will be performed per Testing Laboratory Services requirements.

B. Compressive Strength Test Specimens: Four test specimens for compressive strength test will be made in accordance with ASTM C 31 for each 30 cubic yards or less of sidewalk that is placed in one day. Two specimens will be tested at 7 days. Remaining two specimens will be tested at 28 days. Specimens will be tested in accordance with ASTM C 39. Minimum compressive strength: 2500 psi at 7 days and 3000 psi at 28 days.

C. Yield test for cement content per cubic yard of concrete will be made in accordance with ASTM C 138. When cement content is found to be less than that specified per cubic yard, reduce batch weights until amount of cement per cubic yard of concrete conforms to requirements.

D. If the Contractor places concrete without notifying the laboratory, the Owner will have the concrete tested by means of core test as specified in ASTM C 42. When concrete does not meet specification, cost of test will be deducted from payment.

E. Sampling of fresh concrete shall be in accordance with ASTM C 172.

F. Take slump tests when cylinders are made and when concrete slump appears excessive.

G. Concrete shall be acceptable when average of two 28 day compression tests is equal to or greater than minimum 28 day strength specified.

H. If either of two tests on field samples is less than average of two tests by more than 10 percent, that entire test shall be considered erratic and not indicative of concrete strength. Core samples will be required of in-place concrete in question.

I. If 28 day laboratory test indicates that concrete of low strength has been placed, test concrete in question by taking cores as directed by Engineer. Take and test at least three representative cores as specified in ASTM C 42 and deduct cost from payment due.

3.06 NONCONFORMING CONCRETE

A. Remove and replace areas that fail compressive strength tests, with concrete of thickness shown on Drawings.

B. Replace nonconforming sections at no additional cost to Owner.

3.07 PROTECTION

A. Maintain newly place concrete in good condition until completion of Work.

B. Replace damaged areas.

END OF SECTION 32 13 14

SECTION 32 13 15 - CONCRETE DRIVEWAYS

PART 1 G E N E R A L

1.1 SUMMARY

A. This section includes the followings:

1. Portland cement concrete driveways.

1.2 MEASUREMENT AND PAYMENT

A. Stipulated Price (Lump Sum). If Contract is Stipulated Price Contract, payment for Work in this Section is included in total Stipulated Price.

PART 2 P R O D U C T S

2.1 MATERIALS

A. Concrete: Conform to material and proportion requirements for concrete of Section 32 13 13 - Concrete Paving.

B. Reinforcing Steel: Conform to material requirements for reinforcing steel of Section 32 13 13 - Concrete Paving.

C. Preformed Expansion Joint Material: Conform to material requirements for preformed expansion joint material of Section 32 13 73 - Concrete Paving Joint Sealants.

D. Expansion Joint Filler: Conform to material requirements for expansion joint material of Section Section 32 13 73 - Concrete Paving Joint Sealants.

E. Subgrade Materials: Conform to subgrade material requirements of Section 31 11 13.13 - Lime Treated Subgrades.

PART 3 E X E C U T I O N

3.1 PREPARATION

A. Prepare subgrade in accordance with applicable portions of Section 31 11 13.13 - Lime Treated Subgrades,

3.2 PLACEMENT

A. Place and finish concrete in accordance with applicable portions of Section 32 13 13 - Concrete Paving.

3.3 JOINTS

A. Install joints in concrete driveway in accordance with Section Section 32 13 73 - Concrete Paving Joint Sealants.

3.4 CONCRETE CURING

A. Cure concrete driveway in accordance with Section 03 39 00 - Concrete Curing.

3.5 PROTECTION

A. Conform to applicable requirements of Section 03 39 00 - Concrete Curing.

END OF SECTION 32 13 15

SECTION 321373 – CONCRETE PAVING JOINT SEALANTS

PART 1 - GENERAL

1.1 SUMMARY

A. This section includes the following:

1. Joints for concrete paving, concrete driveways, curbs.
2. Saw-cutting existing concrete or asphalt pavements for new joints.

1.2 MEASUREMENT AND PAYMENT

A. Stipulated Price (Lump Sum). If the Contract is a Stipulated Price Contract, payment for work in this Section is included in the total Stipulated Price.

1.3 REFERENCES

A. ASTM A 615 - Standard Specification for Deformed and Plain Billet-Steel Bars for Concrete Reinforcement.

B. ASTM D 994 - Standard Specification for Preformed Expansion Joint Filler for Concrete (Bituminous Type).

C. ASTM D 1751 - Standard Specification for Preformed Expansion Joint Filler for Concrete Paving and Structural Construction (Nonextruding and Resilient Bituminous Types).

D. ASTM D 3405 - Standard Specification for Joint Sealants, Hot-Applied, for Concrete and Asphalt Pavements.

E. TxDOT Tex-525-C - Tests for Asphalt and Concrete Joint Sealers

PART 2 - PRODUCTS

2.1 BOARD EXPANSION JOINT MATERIAL

A. Filler board of selected stock. Use wood of density and type as follows:

1. Clear, all-heart cypress weighing no more than 40 pounds per cubic foot, after being oven dried to constant weight.
2. Clear, all-heart redwood weighing no more than 30 pounds per cubic foot, after being oven dried to constant weight.

2.2 PREFORMED EXPANSION JOINT MATERIAL

A. Bituminous fiber and bituminous mastic composition material conforming to ASTM D 994 and ASTM D 1751.

2.3 JOINT SEALING COMPOUND

A. Conform joint sealants to one of sealant classes described in this section.

B. Conform hot-poured rubber-asphalt compound to ASTM D 3405.

C. Two-component Synthetic Polymer.

1. Curing is to be by polymerization and not by evaporation of solvent or fluxing of harder particles.
2. Cure sufficiently at average temperature of 25 ∀ 1 C (77 ∀ 2 F) so as not to pick up under wheels of traffic in maximum three hours.
3. Performance requirements, when tested in accordance with TxDOT Tex-525-C, shall meet above curing times and requirements as follows:

Cold-Extruded and Cold-Pourable (Self-Leveling) Specifications	
Property	Requirement
Penetration, 25 C (77 F) 150 g Cone, 5 s, 0.1 mm (in.), maximum	130
Bond and Extension 50%, -29 C (-20 F), 3 cycles: X Dry Concrete Block X Steel blocks (Primed, if recommended by manufacturer) *Steel blocks shall be used when armor joints are specified	 Pass Pass
Flow at 70 C (158 F)	None
Water content % by mass, maximum	5.0
Resilience: X Original sample, % min. (cured) X Oven-aged at 70 C (158 F), % min.	 50 50
Cold-extruded material only - Cold Flow (10 minutes)	None

After bond and extension test, there shall be no evidence of cracking, separation or other opening that is over 3 millimeters (1/8 inch) deep in sealer or between sealer and test blocks.

4. Provide cold-extruded type for vertical or sloping joints.
5. Provide self-leveling type for horizontal joints.

D. Self-Leveling, Low Modulus Silicone or Polyurethane Sealant for Asphaltic Concrete and Portland Cement Concrete Joints. This shall be a single component self-leveling silicone or polyurethane material that is compatible with both asphalt and concrete pavements. The seal-

er shall not require a primer for bond; a backer rod shall be required which is compatible with the sealant; no reaction shall occur between rod and sealant.

When tested in accordance with TxDOT Tex-525-C, self-leveling sealant shall meet following requirements:

Self-Leveling, Low Modulus Silicone or Polyurethane Sealant	
Property	Requirements
Tack Free Time, 25 ∀ 1 C (77 ∀ 2 F), minutes	120 maximum
Nonvolatile content, % by mass	93 minimum
Tensile Strength and 24 Hour Extension Test: X Initial, 10-day cure, 25 ∀ 1 C (77 ∀ 2 F), kPa (psi) X After Water Immersion, kPa (psi) X After Heat Aging, kPa (psi) X After Cycling, -29 C (-20 F), 50%, 3 cycles, kPa (psi) X 24 Hour Extension	 X 21 to 69 (3 to 10) X 21 to 69 (3 to 10) X 21 to 69 (3 to 10) X 21 to 69 (3 to 10) X Pass (All Specimens) After 24 hours, there shall be no evidence of cracking, separation or other opening that is over 3 mm (1/8 in.) deep at any point in the sealer or between the sealer and test blocks.

2.4 LOAD TRANSMISSION DEVICES

A. Smooth, steel dowel bars conforming to ASTM A 615, Grade 60. When indicated on Drawings, encase one end of dowel bar in approved cap having inside diameter 1/16 inch greater than diameter of dowel bar.

B. Deformed steel tie bars conforming to ASTM A 615, Grade 60.

2.5 SUPPORTS FOR REINFORCING STEEL AND JOINT ASSEMBLY

A. Employ supports of approved shape and size that will secure reinforcing steel and joint assembly in correct position during placing and finishing of concrete. Space supports as directed by Project Manager.

PART 3 - EXECUTION

3.1 PLACEMENT

A. When new Work is adjacent to existing concrete, place joints at same location as existing joints in adjacent pavement.

B. If limit of removal of existing concrete or asphalt pavement does not fall on existing joint, saw cut existing pavement minimum of 2 inches deep to provide straight, smooth joint surface without chipping, spalling or cracks.

3.2 CONSTRUCTION JOINTS

A. Place transverse construction joint wherever concrete placement must be stopped for more than 30 minutes. Place longitudinal construction joints at interior edges of pavement lanes using No. 6 deformed tie bars, 30 inches long and spaced 18 inches on centers.

3.3 EXPANSION JOINTS

A. Place 3/4 inch expansion joints at radius points of curb returns for cross street intersections, or as located in adjacent pavement but no further than 80 feet apart. Use no boards shorter than 6 feet. When pavement is 24 feet or narrower, use not more than 2 lengths of board. Secure pieces to form straight joint. Shape board filler accurately to cross section of concrete slab. Use load transmission devices of type and size shown on Drawings unless otherwise specified or shown as "No Load Transfer Device." Seal with joint sealing compound.

3.4 CONTRACTION JOINTS

A. Place contraction joints at same locations as in adjacent pavement or at spaces indicated on Drawings. Place smoothed, painted and oiled dowels accurately and normal to joint. Seal groove with joint sealing compound.

3.5 LONGITUDINAL WEAKENED PLANE JOINTS

A. Place longitudinal weakened plane joints at spaces indicated on Drawings. If more than 15 feet in width is poured, longitudinal joint must be saw cut. Seal groove with joint sealing compound.

3.6 SAWED JOINTS

A. Use sawed joints as alternate to contraction and weakened plane joints. Use circular cutter capable of cutting straight line groove minimum of 1/4 inch wide. Maintain depth of one quarter of pavement thickness. Commence sawing as soon as concrete has hardened sufficiently to permit cutting without chipping, spalling or tearing and prior to initiation of cracks. Once sawing has commenced, continue until completed. Make saw cut with one pass. Complete sawing within 24 hours of concrete placement. Saw joints at required spacing consecutively in sequence of concrete placement.

B. Concrete Saw: Provide sawing equipment adequate in power to complete sawing to required dimensions and within required time. Maintain ample supply of saw blades at work site during sawing operations. Maintain sawing equipment on job during concrete placement.

3.7 JOINTS FOR CURB

A. Place 3/4 inch preformed expansion joints through curb and gutters at locations of expansion and contraction joints in pavement, at end of radius returns at street intersections and driveways, and at curb inlets. Maximum spacing shall be 120-foot centers.

3.8 JOINTS FOR CONCRETE DRIVEWAYS

A. Provide 3/4-inch expansion joints conforming to ASTM D 1751 across driveway in line with street face of sidewalks, at existing concrete driveways, and along intersections with sidewalks and other structures. Extend expansion joint material full depth of slab.

3.9 JOINT SEALING

A. Seal joints only when surface and joints are dry, ambient temperature is above 50 degrees F and less than 85 degrees F and weather is not foggy or rainy.

B. Use joint sealing equipment in like new working condition throughout joint sealing operation, and be approved by Project Manager. Use concrete grooving machine or power-operated wire brush and other equipment such as plow, brooms, brushes, blowers or hydro or abrasive cleaning as required to produce satisfactory joints.

C. Clean joints of loose scale, dirt, dust and curing compound. The term joint includes wide joint spaces, expansion joints, dummy groove joints or cracks, either preformed or natural. Remove loose material from concrete surfaces adjacent to joints.

D. Fill joints neatly with joint sealer to depth shown. Pour sufficient joint sealer into joints so that, upon completion, surface of sealer within joint will be 1/4 inch above level of adjacent surface or at elevation as directed.

3.10 PROTECTION

A. Maintain joints in good condition until completion of Work.

B. Replace damaged joints material with new material as required by this Section.

END OF SECTION 32 13 73

SECTION 32 14 13 – INTERLOCKING CONCRETE PAVEMENT OVERLAY

PART 1 - GENERAL

1.1 SUMMARY

A. Section Includes:
1. Concrete paver units.
2. Bedding and joint sand.
3. Edge restraints.
4. Sealers.

1.2 SUBMITTALS

A. Manufacturer’s drawings and details: Indicate perimeter conditions, relationship to adjoining materials and assemblies, concrete paver layout, patterns, color, installation and setting details.

B. Sieve analysis per ASTM C 136 for grading of bedding and joint sand.

C. Bedding sand durability test results.

D. Concrete pavers:
1. Four representative full-size samples of each paver type, thickness, color, finish that indicate the range of color variation and texture expected in the finished installation. Color selected by Architect from manufacturer’s available colors.
2. Accepted samples become the standard of acceptance for the work.
3. Test results from an independent testing laboratory for compliance of paving unit requirements to ASTM C 936.
4. Manufacturer's catalog product data, installation instructions, and material safety data sheets for the safe handling of the specified materials and products.

E. Paver Installation Subcontractor:
1. A copy of Subcontractor’s current certificate from the Interlocking Concrete Pavement Institute Concrete Paver Installer Certification program.
2. Job references from projects of a similar size and complexity. Provide Owner/Client/General Contractor names, postal address, phone, fax, and email address.

1.3 QUALITY ASSURANCE

A. Paving Subcontractor Qualifications:
1. Utilize an installer having successfully completed concrete paver installation similar in design, material, and extent indicated on this project.
2. Utilize an installer holding a current certificate from the Interlocking Concrete Pavement Institute Concrete Paver Installer Certification program.

B. Mock-Ups:
   1. Install a 7 ft x 7 ft paver area.
   2. Use this area to determine surcharge of the bedding sand layer, joint sizes, lines, laying pattern(s), color(s), and texture of the job.
   3. This area will be used as the standard by which the work will be judged.
   4. Subject to acceptance by Architect, mock-up may be retained as part of finished work.
   5. If mock-up is not retained, remove and properly dispose of mock-up.

1.4 DELIVERY, STORAGE & HANDLING

A. Comply with manufacturer's ordering instructions and lead-time requirements to avoid construction delays.

B. Delivery: Deliver materials in manufacturer's original, unopened, undamaged containers packaging with identification labels intact.
   1. Coordinate delivery and paving schedule to minimize interference with normal use of buildings adjacent to paving.
   2. Deliver concrete pavers to the site in steel banded, plastic banded or plastic wrapped packaging capable of transfer by fork lift or clamp lift.
   3. Unload pavers at job site in such a manner that no damage occurs to the product.

C. Storage and Protection: Store materials protected such that they are kept free from mud, dirt, and other foreign materials.
   1. Cover bedding sand and joint sand with waterproof covering if needed to prevent exposure to rainfall or removal by wind. Secure the covering in place.

1.5 PROJECT/SITE CONDITIONS

A. Environmental Requirements:
   1. Do not install sand or pavers during heavy rain.
   2. Do not install sand and pavers over frozen aggregate base materials.
   3. Do not install frozen sand or saturated sand.
   4. Do not install concrete pavers on frozen or saturated sand.

PART 2 - PRODUCTS

2.1 CONCRETE PAVERS

A. Manufacturer: Basis of Design: Pavestone Company, Verona Series or Architects approved equal.

B. Interlocking Concrete Pavers:
   1. Paver Type:
      a. Material Standard: Comply with material standards in ASTM C 936.
      b. Colors as indicated.
      c. Color Pigment Material Standard: Comply with ASTM C 979.

d. Size: 3 x 18 x 3-1/8 inches thick.
e. Pattern: Herringbone.
f. Average Compressive Strength (ASTM C 140): 8000 psi (55 MPa) with no individual unit under 7200 psi (50 MPa) per ASTM C 140.
g. Average Water Absorption (ASTM C 140): 5% with no unit greater than 7%.
h. Freeze/Thaw Resistance (ASTM C 1645): Provide test results to 28 freeze/thaw cycles with no greater loss than 225 g/m^2 of surface area or 49 cycles with no greater loss than 500 g/m^2 of surface area. Freeze-thaw testing requirements shall be waived for applications not exposed to freezing conditions.

2.2 BEDDING AND JOINT SAND

A. Provide bedding and joint sand as follows:
1. Washed, clean, non-plastic, free from deleterious or foreign matter, symmetrically shaped, natural or manufactured from crushed rock.
2. Do not use limestone screenings, stone dust, or sand for the bedding sand material that do not conform to the grading requirements of ASTM C 33.
3. Do not use mason sand or sand conforming to ASTM C 144 for the bedding sand.
4. Bedding Sand Material Requirements: Conform to the grading requirements of ASTM C 33 with modifications as shown in Table 1.

Table 1
ASTM C 33Grading Requirements for Bedding Sand

Sieve Size	Percent Passing
3/8 in	100
No. 4	95 to 100
No. 8	85 to 100
No. 16	50 to 85
No. 30	25 to 60
No. 50	10 to 30
No. 100	2 to 10
No. 200	0 to 1

2.3 EDGE RESTRAINTS

A. Provide edge restraints installed around the perimeter of all interlocking concrete paving unit areas as follows:
1. Material: Pre-cast concrete to match paving unit in finish and color.

2.4 ACCESSORIES

A. Provide accessory materials as follows:
1. Manufacturer: Paving manufacturers standard product.

PART 3 - EXECUTION

3.1 EXAMINATION

A. Acceptance of Site Verification of Conditions:
   1. General Contractor shall inspect, accept and certify in writing to the paver installation subcontractor that site conditions meet specifications for the following items prior to installation of interlocking concrete pavers.
      a. Verify that Concrete base materials, thickness, surface tolerances and elevations conform to specified requirements.
      b. Verify location, type, and elevations of edge restraints, utility structures, and drainage holes and inlets.
   2. Do not proceed with installation of bedding sand and interlocking concrete pavers until base conditions are corrected by the General Contractor or designated subcontractor.

3.2 PREPARATION

A. Verify base is clean and dry, certified by General Contractor as meeting material, installation and grade specifications.

B. Verify that base is ready to support sand, edge restraints, and, pavers and imposed loads.

C. Edge Restraint Preparation:
   1. Install edge restraints per the drawings and manufacturer's recommendations at the indicated elevations.

3.3 INSTALLATION

A. Spread bedding sand evenly over the base course and screed to a nominal 1 in. thickness. Spread bedding sand evenly over the base course and screed rails, using the rails and/or edge restraints to produce a nominal 1 in. thickness, allowing for specified variation in the base surface.
   1. Do not disturb screeded sand.
   2. Screeded area shall not substantially exceed that which is covered by pavers in one day.
   3. Do not use bedding sand to fill depressions in the base surface.

B. Lay pavers in pattern(s) shown on drawings. Place units hand tight without using hammers. Make horizontal adjustments to placement of laid pavers with rubber hammers as required.

C. Provide joints between pavers between 1/16 in. and 3/16 in. (2 and 5 mm) wide. No more than 5% of the joints shall exceed 1/4 in. wide to achieve straight bond lines.

D. Joint (bond) lines shall not deviate more than ±1/2 in. over 50 ft. from string lines.

E. Fill gaps at the edges of the paved area with cut pavers or edge units.

F. Cut pavers to be placed along the edge with a [double blade paver splitter or] masonry saw.

G. Adjust bond pattern at pavement edges such that cutting of edge pavers is minimized.

H. Keep skid steer and forklift equipment off newly laid pavers that have not received initial compaction and joint sand.

I. Use a low-amplitude plate compactor capable of at least minimum of 4,000 lbf at a frequency of 75 to 100 Hz to vibrate the pavers into the sand. Remove any cracked or damaged pavers and replace with new units.

J. Simultaneously spread, sweep and compact dry joint sand into joints continuously until full. This will require at least 4 to 6 passes with a plate compactor. Do not compact within 6 ft of unrestrained edges of paving units.

K. All work within 6 ft. of the laying face must shall be left fully compacted with sand-filled joints at the end of each day or compacted upon acceptance of the work. Cover the laying face or any incomplete areas with plastic sheets overnight if not closed with cut and compacted pavers with joint sand to prevent exposed bedding sand from becoming saturated from rainfall.

L. Remove excess sand from surface when installation is complete.

M. Allow excess joint sand to remain on surface to protect pavers from damage from other trades. Remove excess sand when directed by the Contractor.

N. Surface shall be broom clean after removal of excess joint sand.

3.4 FIELD QUALITY CONTROL

A. The final surface tolerance from grade elevations shall not deviate more than ±3/8 in. (±10 mm) under a 10 ft (3 m) straightedge.

B. Check final surface elevations for conformance to drawings.

C. The surface elevation of pavers shall be 1/8 in. to 1/4 in. (3 to 6 mm) above adjacent drainage inlets, concrete collars or channels.

D. Lippage: No greater than 1/8 in. (3 mm) difference in height between adjacent pavers.

3.5 JOINT SAND STABILIZATION

A. Apply joint sand stabilization materials between concrete pavers in accordance with the manufacturer’s written recommendations.

3.6 PROTECTION

A. After work in this section is complete, the General Contractor shall be responsible for protecting work from damage due to subsequent construction activity on the site.

END OF SECTION 321413

SECTION 321613 - CONCRETE CURBS AND GUTTERS

PART 1 GENERAL

1.1SCOPE

A. This Section specifies the requirements for forming and placing reinforced concrete curbs, pavement and sidewalks to the lines and grades shown on the drawings and constructed as specified herein.

1.2 APPLICABLE PUBLICATIONS

The following specifications and standards of the latest issues listed below, but referred to thereafter by basic designation only, form a part of this specification to the extent indicated by the references thereto:

A. Texas State Department of Highways and Public Transportation 1982 Standard Specifications for Construction of Highways, Streets and Bridges (TXDOT):

1. Item 360 Concrete Pavement (Water Cement Ratio)
2. Item 526 Membrane Curing

B. American Society for Testing and Materials Standards (ASTM):

1. D 1751 Preformed Expansion Joint Fillers for Concrete Paving and Structural Construction

2. A 525 Steel Sheet, Zinc-Coated (Galvanized)

3. C 309 Liquid Membrane-Forming Compounds for Curing Concrete

4. A 615 Standard Specification for Deformed Billet-Steel Bars for Concrete Reinforcement

5. C 94 Ready-Mixed Concrete

6. C 31 Method of Making and Curing Concrete Compression on Flexure Test Specimens in the Field

7. C 39 Method of Test for Compress Strength of Molded Concrete Cylinders

8. A 186 Welded Steel Wire, Fabric, Plain, for Concrete Reinforcement

1.3 RELATED WORK SPECIFIED ELSEWHERE

A. Section 31 32 13.19 Lime Soil Stabilization

B. Section 31 32 13.16 Cement Soil Stabilization

C. Section 31 32 13.23 Fly-Ash Soil Stabilization

D. Section 31 32 13.26 Lime Fly-Ash Stabilization

E. Section 31 22 16 Fine Grading

F. Section 32 17 23 Pavement Markings

PART 2 PRODUCTS

2.1 CONCRETE

A. Cement, aggregates, admixtures, and water shall conform with the specifications of TXDOT, Item 421. Preparation of concrete mix shall be in accordance with article 360.3 of TxDOT, Item 360

B. Maximum size of aggregate 1-1/2 inches.

C. Slump shall range from 1 to 3 inches.

D. Air entrainment concrete mixture shall have an air content by volume of 4.5 percent plus or minus 1.5%.

E. Concrete shall be mixed in accordance with TxDOT, Item 522.

F. Ready mixed concrete conforming with ASTM C 94 may be used.

G. The concrete mix shall be designed by a commercial testing laboratory, and submitted for approval.

2.2 REINFORCEMENT

A. Reinforcing steel shall meet the specifications of ASTM A615, Grade 60. Bars shall be deformed billet steel free of defects.

2.3 BOARD FILLER

A. Timber Boards shall meet the specifications of TxDOT Item 433.2(5)(a).

B. Impregnated asphalt board shall conform to TxDOT Item 433.2(5)(b).

C. Board filler shall be free of defects which will impair their usefulness as expansion joint fillers.

2.4 PREFORMED BITUMINOUS EXPANSION BOARD

A. Preformed bituminous expansion boards shall meet the specifications for ASTM D 1751.

2.5 JOINT SEALING MATERIAL

A. Curbs and Pavement joint sealing material shall meet the requirements and specifications of TxDOT Items 360.3(f).

B. Sidewalk joint sealing materials shall be GC-9 synthacalk sealant as manufactured by Pecora or approved equal.

2.6 DEFORMED CONTRACTION JOINT METAL STRIPS

A. Deformed contraction joint metal strips shall be 28 ga. steel, galvanized 1.25 oz. per square foot or heavier and meet the specifications of ASTM A 525.

2.7 CURING COMPOUND

A. Curing compound shall conform to the specifications of ASTM C 309, Type 1 or Type 2, white pigmented.

2.8 LOAD TRANSMISSION DEVICES FOR EXPANSION AND CONTRACTION JOINTS

A. Load Transmission devices shall be as detailed on plans and conform to the properties specified in ASTM A615, Grade 60 steel.

2.9 STEEL DOWEL BARS

A. Steel dowel bars and steel reinforcement shall be deformed or smooth bars conform in properties to ASTM A 615 Grade 40. Unless otherwise shown on the plans all reinforcing steel shall be deformed bars, all dowel bars at joints shall be smooth bars, and all curb dowels shall be deformed bars.

PART 3 EXECUTION

3.1 GENERAL

A. The curb and sidewalk pavement shall be constructed to the lines and grades shown on the drawings.

3.2 CURBS

A. Dowelled on Curb

1. After curing the concrete pavement, doweled on curbs, using secure forms, shall be constructed to the size shown on the plans.

2. Dowels may be placed in the pavement slab before the concrete has set, or placed in drilled holes using epoxy adhesive to secure the bars in place.

3. Pavement joints shall extend through the curbs. Expansion joint material shall be the same thickness, type and quality as specified for the pavement.

4. When sawed joints are provided, the placement of curb shall be delayed until all transverse joints are sawed.

5. Weakened plane joints shall be formed by inserting an asphaltic board strip cut to conform to the shape of the curb.

6. All joints should be tool finished after sufficient curing of the concrete.

7. The concrete, reinforcement and curing of the curbs shall conform with the requirements specified for the concrete pavement.

8. In finishing the curbs, a thin coating of mortar shall be worked into the exposed face of the curb in order to obtain a brush finish free of all blemishes and form or tool marks.

9. Curbs shall have a straightness tolerance of 1/8 inch in 10 feet, measured longitudinally along the back and face of the curb.

10. The top of the curb shall not vary vertically in height more than 1/8" when measured up from the concrete pavement.

B. Monolithic Curbs and Curb and Gutter

1. Monolithic curb and curb and gutter shall conform to the specifications for doweled on curb and the details shown on the plans.

2. Monolithic curb and curb and gutter shall be constructed after final grading of the subgrade and before placement of the base material.

3. These curbs shall be cured for at least 72 hours and shall be properly backfilled behind the curb by hand tamping to 95% standard proctor density ASTM 698 before placing the base material.

3.3 APPLICATION OF JOINT SEALING COMPOUND

A. Joints shall be thoroughly cleaned of loose scale, dirt, dust and curing compound. When necessary, existing joint material shall be removed to the depth as shown on the plans.

B. Joints shall be filled to the full depth of the joint opening. Pouring shall be done in a neat and workman like manner to give satisfactory results. Sufficient joint sealer shall be poured into the joints so that upon the completion of the work the surface of sealer within the joint shall be 1/4" above top of the pavement surface.

3.4 TESTS

A. Concrete Test Specimens

1. Test cylinders for compressive strength shall be taken and cured in accordance with ASTM C 31 and tested in accordance with ASTM C 39.

2. At least 3 cylinders shall be made for each day for each 100 c.y. of concrete or fraction thereof, placed. A testing laboratory for the tests shall be selected and paid for by the Owner.

3. Laboratory technician will prepare concrete test cylinders.

B. Testing of Concrete Surface

1. After finishing is complete and while the concrete is still workable, the surface shall be tested for trueness with an approved 10' steel straightedge.

2. The straightedge shall be operated from the side of the pavement placed parallel to the pavement center line and passed across the slab to reveal any high spots or depressions.

3. The straightedge shall be advanced along the pavement in successive stages of not more than 1/2 its length. A tolerance of 1/8" in 10' must be met.

4. Any correction of the surface required shall be accomplished by adding concrete if required and by operating the longitudinal float over the area.

5. The surface test with the straightedge shall then be repeated.

3.5 OPENING PAVEMENT TO TRAFFIC

A. The pavement shall be closed to all traffic, including vehicles of the Contractor, until the concrete is at least 7 days old or has attained a minimum average of 2000 psi compressive strength.

B. Any damage to the pavement prior to acceptance by the Owner shall be repaired by the Contractor at no extra cost to the Owner.

C. This does not relieve the Contractor from the normal liabilities and maintenance resposibilities, implied or otherwise, for the pavement or other items.

END OF SECTION 32 16 13

SECTION 32 17 23 – PAVEMENT MARKING

PART 1 - GENERAL

1.1 SUMMARY

A. This section includes the following:

1. This item includes white thermoplastic pavement markings for crosswalks, stop lines, lane lines, and other types of traffic controls.

1.2 SUBMITTALS

A. Product Data: Submit Manufacturer's literature indicating product specifications and instructions for handling, installation, and curing. Include performance test data sheets for each product.

B. Submit material supplier's certification of compliance with specifications.

C. Submit proposed methods, equipment, and sequence of operation for layout, surface preparation, and installation.

D. Chemical Analysis: Submit infrared analysis of Type B resins for each manufacturer used.

1.3 MEASUREMENT AND PAYMENT

A. Stipulated Price (Lump Sum). When Contract is Stipulated Price Contract, payment for work in this Section is included in total Stipulated Price.

1.4 REFERENCES

A. ASTM E 28 - Standard Test Methods for Softening Point of Resins Derived from Naval Stores by Ring-and-Ball Apparatus.

B. ASTM G 152 - Standard Practice for Operating Carbon Arc Light Apparatus for Exposure of Nonmetallic Materials.

C. ASTM G 153 - Standard Practice for Operating Enclosed Carbon Arc Light Apparatus for Exposure of Nonmetallic Materials.

D. TxDOT Tex-822-B - Determining Refraction Index of Glass Beads.

E. TxDOT Tex-826-B - Water Absorption Test of Beads.

F. TxDOT Tex-839-B - Determining Color in Reflective Material.

G. TxDOT Tex-851-B - Evaluating the Abrasion Resistance of Pavement Marking Material.

PART 2 - PRODUCTS

2.1 MATERIAL REQUIREMENTS

A. General Requirements. Especially compound Type B thermoplastic pavement marking material for use on either asphaltic or Portland cement concrete surfaces. Clearly mark each container to indicate color, weight, type of material, and lot or batch number (consider lot or batch as each individual mix or blend that produces finished product ready for use). Package material in either suitable corrugated containers or thermal degradable plastic bags to avoid sticking during shipment or storage.

B. Thermoplastic markings shall not be slippery when wet, nor exhibit tacky, exposed surface. Cold ductility of material shall permit normal road surface expansion and contraction without chipping or cracking. Markings shall retain their original color, dimensions, and placement under normal traffic conditions at road surface temperatures of 158 F and below.

C. Prime and filler pigments shall pass U.S. Standard sieve No. 230 (0.0024 inch opening) when washed free of resins by solvent washing, and meet following specific requirements for each pigment.

1. Prime Pigments: White pigment shall be Rutile Titanium Dioxide.

2. Filler Pigment: Filler pigment shall be calcium carbonate, 95% purity.

D. Binder

1. Type B - Alkyd: Use binder consisting of mixture of resins, at least one of which is solid at room temperature, and high boiling point plasticizers. At least one-third of binder compositions shall be a maleic-modified glyceryl ester 012 Rosin and shall be no less than 8% by weight of entire material formulation.

F. Glass Traffic Beads: the total silica used in formulation shall be in form of glass traffic beads meeting the following requirements:

1. Manufacture. Use glass traffic beads having the following characteristics:

a. Manufactured from glass;
b. Spherical in shape;
c. Free of sharp angular particles;
d. Free of particles showing milkiness, surface scoring, or surface scratching;
e. Water white in color.

2. Contaminants. Use glass traffic beads having the following characteristics:

   a. Containing less than 1/4 of 1% moisture by weight;
   b. Free of trash, dirt, etc;
   c. Showing no evidence of objectionable static electricity when flowing through regular traffic-bead dispenser.

3. Gradation:

   a. Sieve Analysis. Glass traffic beads shall meet following gradation requirements:

Openings U.S. Standard Sieves	**Percent Passing**
No. 20	95 - 100
No. 30	80 - 95
No. 50	15 - 35
No. 100	0 - 4

   b. Irregular Particles: Glass traffic beads, retained on screen used to determine gradation requirements, shall not contain more than 30% (by weight) irregular particles.

4. Index of Refraction: Glass traffic beads, when tested by TxDOT Tex-822-B, using liquid immersion method at 25 C (77 F) shall show index of refraction within range of 1.50 to 1.53.

5. Wetting. Use glass traffic beads capable of being readily wet with water when tested in accordance with TxDOT Tex-826-B.

6. Stability. Use glass traffic beads showing no tendency toward decomposition, surface etching, change in retro reflective characteristics, or change in color after:

   a. One hour exposure to concentrated hydrochloric acid at 25 C (77 F);

   b. Twenty-four-hour exposure to weak alkali;

   c. One hundred hours of Weather-O-Meter exposure, in accordance with ASTM G 152 and ASTM G 153.

2.2 FINISHED PRODUCT REQUIREMENTS

A. Physical Characteristics. Finished thermoplastic pavement markings material shall be free flowing granular material, unless otherwise shown on Drawings. Material shall remain in free flowing state in storage at temperatures of 100 F or less. Materials shall be readily sprayed through nozzles commonly used on thermoplastic spray equipment at temperatures between 205 and 218 C (401 to 425 F).

B. Toxicity. At temperatures up to and including 230 C (446 F), materials shall not give off fumes which are toxic and otherwise injurious to persons, animals, or property.

C. Material shall not break down or deteriorate when held at 205 C (401 F) for 4 hours.

D. Temperature versus viscosity characteristics of material in plastic state shall remain constant throughout up to four reheatings at 205 C (401 F) and from batch to batch.

E. Material shall not be adversely altered by contact with sodium chloride, calcium chloride, or other similar chemicals on, or used on, roadway surface; by contact with oil content of pavement materials, or by contact from oil dropping from traffic.

F. Softening Point. After heating thermoplastic materials for two hours at 204 C (400 F) Type B Alkyd material shall have softening point greater than 90 C (194 F) when tested in accordance with ASTM E 28-58T - Ball and Ring Method.

G. Color. CIE chromaticity coordinates of materials, when determined in accordance with TxDOT Tex-839-B, shall fall within area having following corner points and shall meet following luminosity requirements.

CIE CHROMATICITY COORDINATE CORNER POINTS					
	Point 1	**Point 2**	**Point 3**	**Point 4**	
Color	X Y	X Y	X Y	X Y	Luminosity
White {tc \12 "White }	0.290 - 0.315	0.310 - 0.295	0.350 - 0.340	0.330 - .360	Min 65

Material shall meet above specified color requirements, before and after 70 hours of exposure in Weather-O-Meter (Atlas, Sunshine Type) fitted with 18 - 102 (18 minutes of sunshine and rain and 102 minutes of sunshine) cyclic gear. Prepare panels for testing with material as supplied.

H. Abrasion. Thermoplastic pavement marking materials shall have loss between 4.0 and 12.0 grams when tested for abrasion in accordance with TxDOT Tex-851-B. Test according to steps 1 through 8 of procedure utilizing following test parameters:

Test distance:	5 inches
Blast pressure:	40 psi
Sample angle:	10 degrees and 122 gram blast media
Blast Media:	1200 grams

I. Uniformity. Manufacture material so that, when sampled in accordance with TxDOT Manual of Testing Procedures, 100-gram sample will be representative of batch or lot of material.

J. When applied 1/8 inch thick, setting time shall not exceed characteristic straight-line curve, lower limit of which is four minutes at 59 F road surface temperatures, and upper limit of which is ten minutes at 90 F road surface temperature. Both temperatures are to be measured at maximum relative humidity of 90%.

2.3 FORMULAE

A. Type B - Alkyd Thermoplastic Marking:

	Pounds
Binder	18 - 23
Titanium Dioxide	12 - 15
Calcium Carbonate	20 - 42
Glass Traffic Beads	30 - 45
TOTAL	100

PART 3 - E XECUTION

3.1 GENERAL

A. Spray apply pavement marking or extrude hot to pavement surface unless application method is specified on Drawings.

B. Provide continuous mixing and agitation of material. Provide clean, square, marking ends. Do not use pans, aprons, or similar appliances which die overruns.

C. Provide thermometer capable of measuring temperature of pavement marking material.

D. Use automatic bead dispenser attached to pavement marking equipment in manner that beads are dispensed uniformly and almost instantly upon marking as marking is being applied to road surface. Rate of application shall be sufficient to achieve retro-directive reflective characteristics specified. Provide automatic cut-off control for bead dispenser, synchronized with cut-off of pavement marking equipment.

E. Place markings in accordance with approved traffic control plan so that minimal interruption to traffic flow is achieved. Protect newly-installed pavement markings from damage by traffic.

F. Apply pavement markings onto clean, dry pavement having road surface temperature above 60 F for Portland cement concrete surface and above 50 F for asphaltic surface. When pavement marking application is by spray and operations cease for five or more minutes, flush spray head by spraying pavement marking material into pan or similar container until material is proper temperature for application.

G. Use markings that are completely reflectorized internally and externally.

H. Use crew experienced in work of installing pavement markings and supply all equipment and materials necessary for placement of pavement markings.

I. Apply material within temperature limits recommended by manufacturer.

J. Prior to placement of thermoplastic material, properly prepare pavement with primer.

3.2 LAYOUT

A. Place pavement markings in proper alignment with guidelines established on roadway. Do not deviate from alignment established greater than two inches. Do not deviate in alignment of marking being placed greater than one inch per 200 feet of marking and do not deviate abruption.

B. Place additional markings required to achieve alignment specified throughout both straight and horizontally curved sections of roadway. Additional markings placed on roadway for alignment purposes shall be temporary in nature and shall not establish permanent marking on roadway. Materials used for alignment markings and equipment used to place markings shall be approved by Engineer.

3.3 SURFACE PREPARATION

A. Clean pavement by sandblasting and prepare in accordance with recommendations of thermoplastic material manufacturer and to satisfaction of Engineer, prior to placement of markings. Surface scarification can be used with prior approval of Engineer.

B. Use cleaning methods approved by Engineer that completely remove contaminants, loose materials, and conditions deleterious to proper adhesion. Do not clean Portland cement concrete surfaces by grinding.

C. Prepare Portland cement concrete surfaces further after cleaning by completely sealing with epoxy or methyl methacrylate sealer, as recommended by thermoplastic material manufacturer. Placed sealer sufficiently in advance of thermoplastic to allow release of all solvents.

D. Prime asphaltic surfaces with sealer, as recommended by thermoplastic material manufacturer based on surface conditions. Include adhesive or adhesion promoter when asphaltic surfaces exhibit polished aggregate.

3.4 INSTALLATION

A. Install in widths of 4, 6, 8, or 12 inches, or shaped otherwise as shown on Drawings. Tolerances in width shall not exceed 1/8 inch. Tolerance shall not exceed 1/4 inch in case of undulation in pavement.

B. Material shall not prohibit adhesion of other thermoplastic markings if, at some future time, new markings are placed over existing materials.

C. Maintain uniform thickness of each pavement marking. Minimum thickness of markings, as measured above plane formed by pavement surface, shall not be less than 1/8 inch (125 mils), unless shown otherwise on Drawings. Maximum thickness shall be 3/16 inch. Supply device, approved by Engineer, to measure thickness of applied extruded markings.

3.5 TESTING

A. Maintain uniform cross section, density, quality, and thickness for markings. Markings shall be uniform throughout their thickness. Use applied markings that are 95% free of holes and voids, and free of blisters for minimum of 60 days after application.

END OF SECTION 32 17 23

SECTION 32 31 00 - FENCES AND GATES

PART 1 - GENERAL

1.1 SUMMARY

A. Section Includes: Cantilevered sliding gates and operators.

1.2 SYSTEM DESCRIPTION

A. Operation: UL 325, Class III (non-supervised).

1.3 SUBMITTALS

A. Product Data: Submit product data, including manufacturer's SPEC-DATA sheet, for specified products.

B. Shop Drawings: Submit shop drawings showing layout and details of gates and details of post foundations.

C. Samples: Submit verification samples of finishes and colors.

1.4 QUALITY ASSURANCES

A. Welder Qualifications: Qualify welding processes and welding operators in accordance with the AWS Standard Qualification Procedure of the Structural Welding Code – Aluminum.

1.5 DELIVERY, STORAGE & HANDLING

A. Delivery: Delivery materials in manufacturer's original, unopened, undamaged containers with identification labels intact.

B. Storage and Protection: Store materials protected from exposure to harmful environmental conditions and at temperature and humidity conditions recommended by the manufacturer.

1.6 WARRANTY

A. Manufacturer's Warranty: Submit, for Owner's acceptance, manufacturer's standard warranty document executed by authorized company official. Manufacturer's warranty is in addition to, and not a limitation of, other rights Owner may have under Contract Documents.
   1. Warranty Period: 3 years.

PART 2 - PRODUCTS

2.1 CANTILEVERED SLIDE GATES & OPERATORS

A. Manufacturer:
   1. Basis of Design: Tymetal Corp., Tiger Security Gate System, or Architects approved equal.

2.2 SLIDING GATE SYSTEM

A. General: Provide gates with double track and infill to match the fence panels.

B. Cantilevered Gate Panel: ASTM F 1184, Type II, Class 2. Provide an engineering aluminum gate panel with sealed ball bearing internal rollers that provide protection against tampering and inclement weather. Finish to match fence panels.

C. Operator: Model TYM-VS, chain driven, providing slow start and stop with operational speed of 2.2 feet per second, complying with UL 325. Provide a 10 gauge, hot-dip galvanized steel in accordance with ASTM A123, motor box locked with a 6-tumbler mechanical lock. Provide tamper-resistant hinges that are welded in place. Provide an integrated manual hand crank that can securely operate the gate system during the loss of AC power.

D. Lock: Provide a waterproof, tamper-resistant, electromechanical gate lock with a 6-tumbler mechanical release. Provide for monitoring of status of lock position (locked or unlocked).

E. Catcher Assembly: Provide an assembly to receive the leading end of the gate panel that will prevent the gate panel from being pried open.

2.3 ENTRY & EXIT CONTROLS

A. Reversing Device (Loop Detector): Model PEEK 625X.

B. Digital Keypad: Model AC-480 (480 codes).

2.4 FABRICATION

A. Fabrication: Comply with ASTM F2200-05.

B. Welding: Comply with AWS D1.2.

C. Finishing: Comply with ASTM F1043.

PART 3 - EXECUTION

3.1 MANUFACTURER'S INSTRUCTIONS

A. Compliance: Comply with manufacturer's product data, including product technical bulletins, product catalog installation instructions and product carton instructions for installation.

3.2 EXAMINATION

A. Site Verification of Conditions: Verify that substrate conditions, for substrates that have been previously installed under other sections, are acceptable for product installation in accordance with manufacturer's instructions.

3.3 PROTECTION

A. Repair or replace damaged products prior to Substantial Completion.

END OF SECTION 323100

SECTION 32 31 00 – PERMACOAT CHAIN LINK FENCE

SEE ATTACHED BROCHURE

END OF SECTION 32 31 00

32 31 00

AMERISTAR®

for Architects & Specifiers

PermaCoat®

Color Chain Link Fence

& TransPort™ Chain Link Gates

University of North Carolina
Greensboro, NC

Maintenance-Free PermaCoat® Finish
Over Galvanized High Strength Steel

www.ameristarfence.com

AMERISTAR®

The Company Behind The Product

Ameristar Fence Products - Tulsa, OK

Ameristar® was chartered several years ago to provide specialty fence products that were more affordable but did not compromise the quality level demanded by specifiers and consumers. This could be accomplished only by complete reformation of the way fence products were being manufactured. Product design was approached from many new perspectives: maximizing high-volume productivity; increasing strength and durability; promoting ease of installation; ensuring an environmentally friendly workplace; and enhancing aesthetic appearance. A new plant was designed and built to house state-of-the-art roll-forming, metal processing and powder coating equipment. The result (shown in the photo above) has boosted Ameristar to its current position as the manufacturing leader in specialty fence production.

Detailed Product Data

Ameristar's electronic media enable architects and specifiers to simply download specification information directly into the appropriate section of their CSI-formatted project specifications; they also enable the direct downloading of product drawings onto project blueprints.

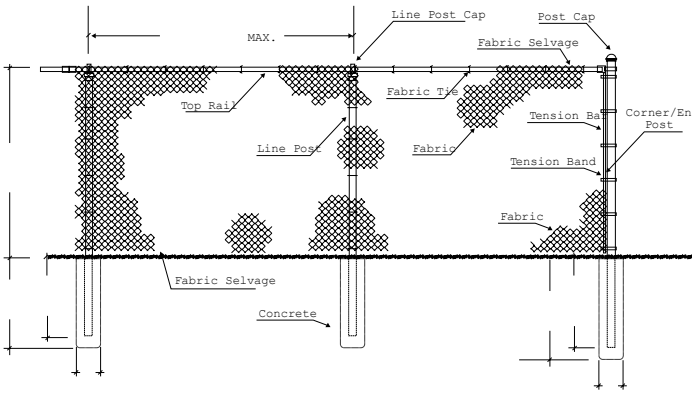

- Architectural Binder
  The adjacent PermaCoat® series drawing is one of several shop drawings contained in Ameristar's Architectural Binder. Available upon request.

- Internet Website
  The Ameristar® website (http://www.ameristarfence.com) enables the user to browse the entire Ameristar® product line. The site is complete with photos, drawings, specifications and installation procedures.

PERMACOAT®

The Product Leader in Color Chain Link Fencing

Any truly great product must have a defining feature that sets it apart from all others; PermaCoat's double coating system, results in a coating durability and life superior to all other coated chain link fence systems.

Electrostatic application in the PermaCoat® powder coating system results in coated surfaces with unmatched performance. The base coat of epoxy powder far surpasses the corrosion resisting abilities of painted surfaces. The "no-mar" polyester powder top coat reduces scratches and burnishing marks normally encountered during shipping.

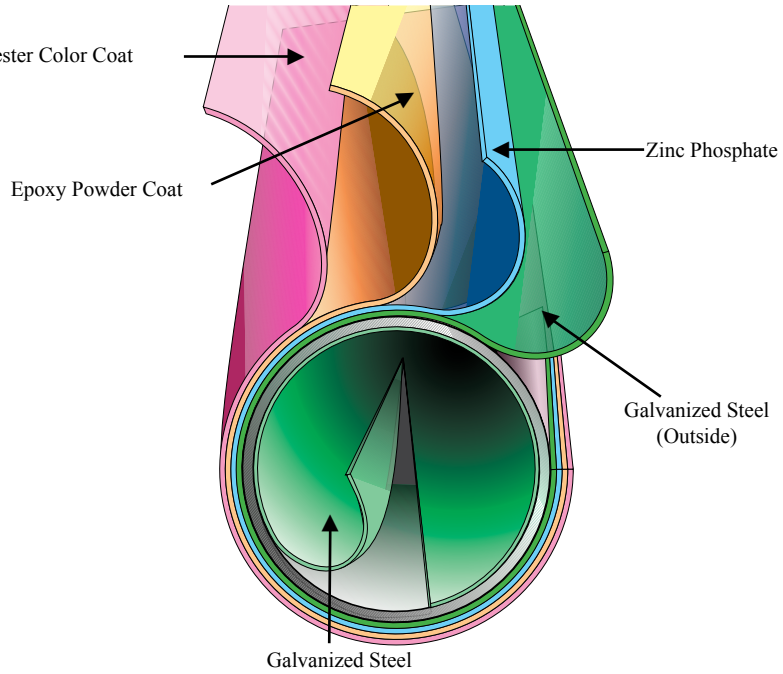

Framework

The fence framework was designed and developed to answer the need for a more durable, attractive and affordable framing product. It is produced from high yield strength galvanized steel, using state-of-the-art mill forming and in-line welding techniques. It is coated with the PermaCoat® powder coating system, with its double layer of protection (actually powder coated twice). The base coat is a epoxy moisture barrier that is thermally fused to the galvanized substrate and is known for its outstanding corrosion resistance. The finish coat is a thermo-setting TGIC "no-mar" polyester with enhanced UV resistance to maintain a beautiful color finish for a lifetime of maintenance-free enjoyment.

Colors

Black

Green

Brown

SUPERIOR FINISH

AMERISTAR® PERMACOAT® (DOUBLE COATED)	CONVENTIONAL POLYESTER (ONE COAT)	CONVENTIONAL POLY-VINYL CHLORIDE (ONE COAT)

PROTECTIVE APPLICATIONS

PermaCoat® Fence System

- Galvanizing
- Zinc Phosphate ①
- Epoxy ②
- No-Mar Polyester

} Double Coating (5 to 6 Mils.)

Conventional Polyester Fence Systems

- Galvanizing
- Iron Phosphate ①
- Polyester

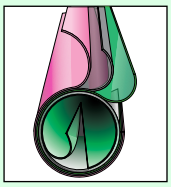

Conventional PVC Fence Systems

- Galvanizing
- Iron Phosphate ①
- PVC

SALT SPRAY RESISTANCE (ASTM B117)

3,500 Hrs.....1,200 Hrs.....500 Hrs.

① Zinc compounds are used in the phosphatizing process because they add a significant amount of sacrificial cathodic protection. The zinc is much more active than steel; therefore, the zinc must oxidize before the steel is free to corrode. Iron phosphate, by contrast, provides no sacrificial cathodic advantage when applied to steel.

② The epoxy in the first of Ameristar's two coating applications provides an effective barrier to moisture and humidity; acting as a primer (3 mils thick) between the galvanized substrate and the polyester finish coat.

PRE-TREATMENT/COATING PROCESS

11 Stage PermaCoat® Double-Coating Process

7 STAGE PRE-TREATMENT

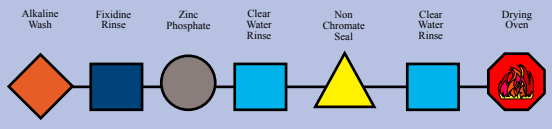

DOUBLE COATING & CURING

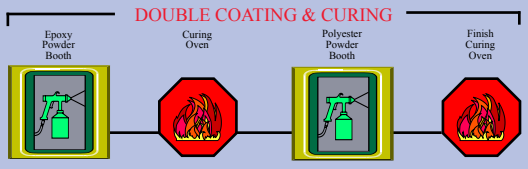

All fence parts, gates and accessories are given complete double PermaCoat® application.

Conventional Polyester Process

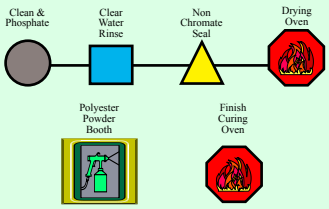

Simultaneous cleaning and phosphatizing significantly decreases the effectiveness of both treatments.

Conventional PVC Process

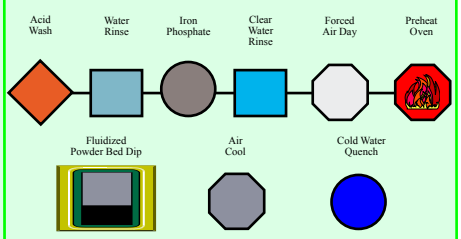

Curing is by a melt and quench process wherein the PVC material solidifies against the base metal surface. Adhesion is suspect and can vary greatly with small ambient changes.

CORROSION RESISTANCE

PermaCoat® significantly exceeds PVC and one coat polyester finishes in its ability to resist corrosion. ASTM B117 test results below show the dramatic difference.

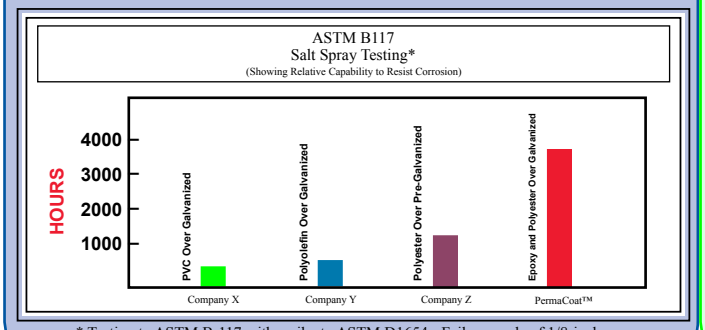

* Testing to ASTM B-117 with scribe to ASTM D1654 - Failure mode of 1/8-inch undercut or medium #8 blisters.

UV RESISTANCE

PermaCoat® is far superior to PVC in resistance to the harmful effects of UV radiation, as shown below using South Florida exposure tests.

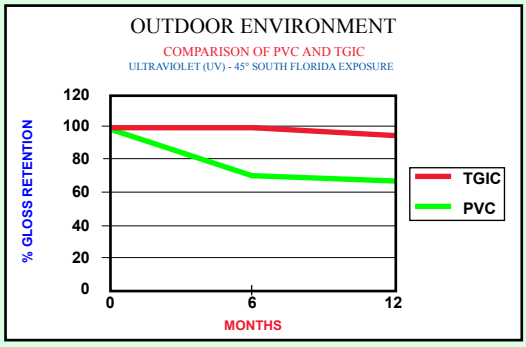

Ameristar® is America's premier manufacturer of color chain link fence materials . Applying the most extensive surface protection ever used on chain link fencing is one of the reasons our company has reached that achievement.

SUPERIOR STRENGTH

PERMACOAT® PC-40™ INDUSTRIAL STRENGTH PIPE PHYSICAL DIMENSIONS & STRENGTH CHARACTERISTICS

FENCE INDUSTRY O.D.	NOMINAL PIPE SIZE I.D.	ACTUAL O.D. (IN.)	WALL THICKNESS (IN.)	WT./FT. (POUNDS)	MIN. YIELD STRENGTH	X	(1) SECTION MODULUS	=	MAX. BENDING MOMENT LBS./IN.	10' FREE SUPPORTED LBS.	CALCULATED LOAD (LBS.) CANTILEVER 4'	CALCULATED LOAD (LBS.) CANTILEVER 6'
1-5/8"	1-1/4"	1.660	.111	1.84	50,000	x	.1961	=	9,805	327	204	135
2"	1-1/2"	1.900	.120	2.28	50,000	x	.2810	=	14,050	468	293	195
2-1/2"	2"	2.375	.130	3.12	50,000	x	.4881	=	24,405	814	508	330
3"	2-1/2"	2.875	.160	4.64	50,000	x	.8778	=	43,890	1,463	914	610
4"	3-1/2"	4.000	.160	6.56	50,000	x	1.7819	=	89,095	2,969	1,856	1,237

(1) Nominal O.D. and minimum wall thickness

PERMACOAT® PC-40™ VS. SCHEDULE 40 & "C" SECTION BENDING STRENGTH COMPARISON

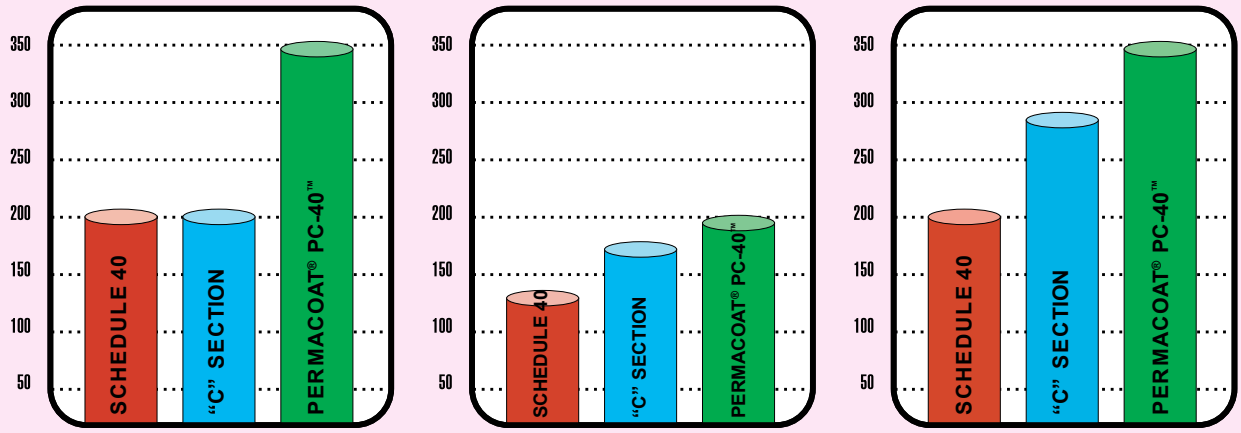

1 5/8" TOP RAIL
10' FREE SUPPORT BEAM

2" LINE POST
6' CANTILEVER TEST

2 1/2" LINE POST
6' CANTILEVER TEST

PERMACOAT® PC-20™ COMMERCIAL STRENGTH PIPE PHYSICAL DIMENSIONS & STRENGTH CHARACTERISTICS

FENCE INDUSTRY O.D.	NOMINAL PIPE SIZE I.D.	ACTUAL O.D. (IN.)	WALL THICKNESS (IN.)	WT./FT. (POUNDS)	MIN. YIELD STRENGTH	X	(1) SECTION MODULUS	=	MAX. BENDING MOMENT LBS./IN.	10' FREE SUPPORTED LBS.	CALCULATED LOAD (LBS.) CANTILEVER 4'	CALCULATED LOAD (LBS.) CANTILEVER 6'
1-5/8"	1-1/4"	1.660	.085	1.43	50,000	x	.158	=	7,880	262	164	109
2"	1-1/2"	1.900	.090	1.74	50,000	x	.221	=	11,060	-	230	154
2-1/2"	2"	2.375	.095	2.31	50,000	x	.373	=	18,650	-	389	259
3"	2-1/2"	2.875	.110	3.25	50,000	x	.636	=	31,810	-	664	442

(1) Nominal O.D. and minimum wall thickness

Ameristar® is America's premier manufacturer of color chain link fence materials . Making the strongest fence pipe in its state-of-the-art roll-forming mill is one of the reasons for Ameristar's prominence.

SUPERIOR SYSTEM

APPLICATION		INDUSTRIAL ASTM F668/F1043 & ASTM F1712 Sports Complexes • Recreational Facilities • Industrial Plant Facilities Government Facilities • Department of Transportation • Prisons	COMMERCIAL ASTM F668/F1043 & F934 Nurseries • Mini-Storages • Golf Courses • Apartments • Office Complexes • Swimming Pools	TENNIS COURT ASTM F969
PERMACOAT® FRAMEWORK	PRODUCT	PERMACOAT® PC-40 FENCE PIPE	PERMACOAT® PC-20 FENCE PIPE	PERMACOAT® FENCE PIPE
15 Year Warranty	Terminal Posts up to 6’	2.375” O.D. x .130” Wall 3.12 lb./ft.	2.375” O.D. x .095” Wall 2.31 lb./ft.	N/A
Heights from 3’ to 20’	Terminal Posts over 6’	2.875” O.D. x .160” Wall 4.64 lb./ft.	2.875” O.D. x .110” Wall 3.25 lb./ft.	2.875” O.D. x .160” Wall 4.64 lb./ft.
	Terminal Posts over 10’	4” O.D. x .160” Wall 6.56 lb./ft.	N/A	2.875” O.D. x .160” Wall 4.64 lb./ft.
Black, Green or Brown PermaCoat® Epoxy & Polyester Powder Coating No-Mar Finish	Line Posts up to 6’	1.900” O.D. x .120” Wall 2.28 lb./ft.	1.900” O.D. x .090” Wall 1.74 lb./ft.	N/A
	Line Posts over 6’	2.375” O.D. x .130” Wall 3.12 lb./ft.	2.375” O.D. x .095” Wall 2.31 lb./ft.	2.375” O.D. x .130” Wall 3.12 lb./ft.
Type B Tubular Steel Framework With Supplemental Color Coating As Per ASTM F1043	Line Posts over 10’	2.875” O.D. x .160” Wall 4.64 lb./ft.	N/A	2.875” O.D. x .160” Wall 4.64 lb./ft.
	Rails & Bracing	1.660” O.D. x .111” Wall 1.84 lb./ft.	1.660” O.D. x .090” Wall 1.43 lb./ft.	1.660” O.D. x .090” Wall 1.43 lb./ft.

With the strength and surface protection manufactured into PermaCoat® chain link fence components, it is clear why Ameristar® is the premier source for all color chain link fence applications.

THE CHAIN LINK REVOLUTION

Color is now being demanded in ever increasing proportions over galvanized chain link fencing. Facility owners and managers wishing to retain the well known endurance of chain link systems while providing a perimeter that blends attractively with its surroundings are finding color systems to be the answer. Ameristar's PermaCoat® supplies the best answer for several reasons.

① Higher Quality – PermaCoat® is the only framework product with the double protection of epoxy (to resist corrosion) and TGIC polyester (to resist UV radiation). Ameristar's state-of-the-art factory houses the complete process from start to finish, employing rigid quality inspections as part of every operation.

HIGH SPEED TUBE MILL	MULTI-PASS ROLL FORM	METAL PROCESSING & GATE MFG.	PERMACOAT® ELECTROSTATIC POWDER COATING	FINISHED GOODS, PACKAGING & MARKING	READILY AVAILABLE INVENTORY	LOGISTICAL ROUTING, LOADING, & SHIPPING

② Environmentally Friendly Production – The modern high-speed tube mill and the extensive pre-treating and coating line were designed to ensure an environmentally friendly workplace and product.

③ Lower Costs – Ameristar's direct manufacturing throughput system ensures a competitive initial cost but a significantly lower long term cost enabled by superior strength and higher quality coating. Maintenance or replacement costs of other systems raises their long term costs far beyond the PermaCoat® color system.

④ Superior Value Alternative – PermaCoat® makes the increasingly popular color chain link fencing a preferred alternative, costing only a fraction more than galvanized chain link systems, while retaining the strength and endurance of the fence that was king over the past century.

PRODUCT PRESENTATION

PermaCoat® - The revolutionary leader in color chain link fence framework, form a fence system that is easily installed, giving an attractive, continuously smooth look to any line of fence.

Industrial PC-40™ Color Chain Link Fence

Atlanta, GA

Ameristar's PermaCoat® PC-40™ industrial color chain link not only control access, as one would expect from an industrial fence; they also enchance the beauty of the facilities and properties they surround.

The use of stainless steel fasteners with the Permacoated framework, makes the PermaCoat® PC-40™ Industrial Fence the most attractive and durable industrial chain link fence available.

PRODUCT PRESENTATION

Commercial PC-20™ Color Chain Link Fences

Greensboro, NC

Security and protection are blended into an attractive appearance with the PermaCoat® PC-20™ commercial chain link fence system. PermaCoat® PC-20™ utilizes considerably stronger framework than that used for conventional galvanized commercial chain link fences, thus ensuring the optimum in available systems.

Tennis Court Color Chain Link Fences

Potomac, MD

The appropriate combination of framework materials from Ameristar's PermaCoat® Industrial PC-40™ and Commercial PC-20™ works best for tennis court perimeters, whether single courts or entire complexes.

TRANSPORT™ CANTILEVER GATE SYSTEMS

TransPort™ Cantilever Gate Systems are available for both chain link and ornamental applications. The TransPort™ is an all weather cantilever gate utilizing an aluminum track extrusion with internal roller assemblies. This results in the gate and track system sliding as a single unit with virtually no frictional resistance.

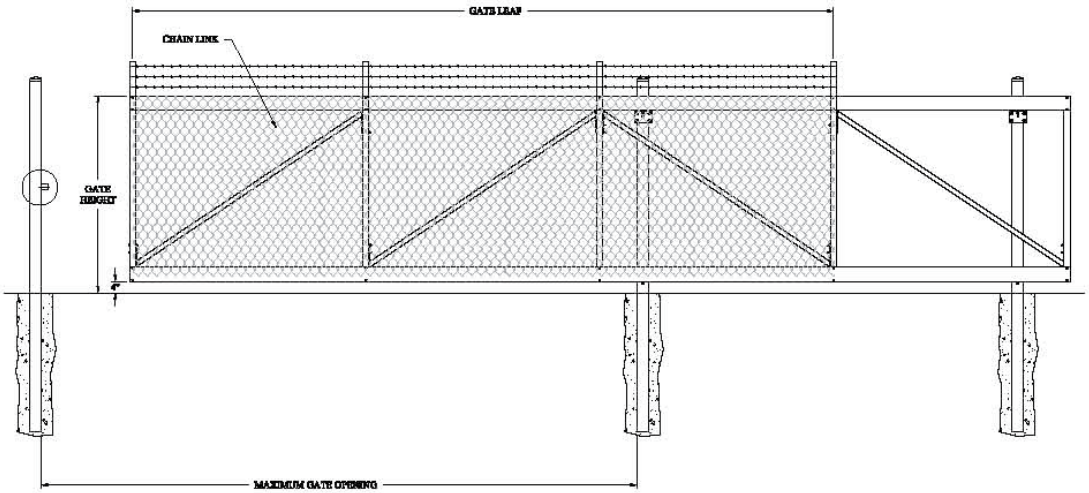

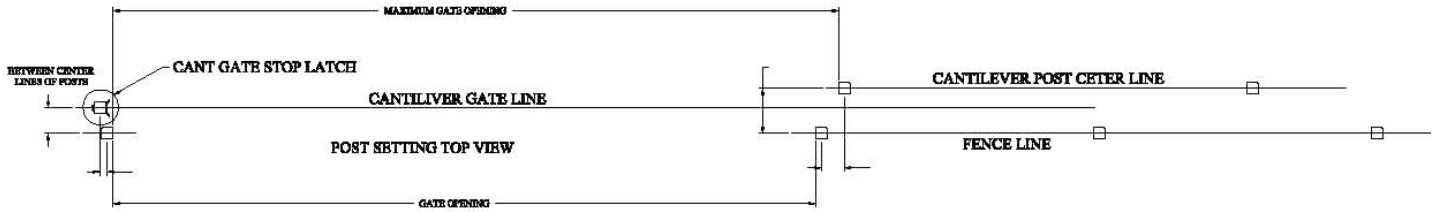

STRENGTH

TransPort™ Cantilever Gates offer superior strength as the track is 60% heavier (by weight) than competitors extrusions.

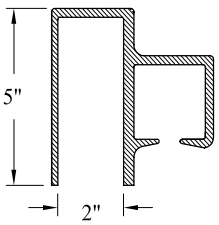

SINGLE FAST-TRAK™ TOP RAIL
WEIGHT = 5.30 LBS./FT.

ALIGNMENT

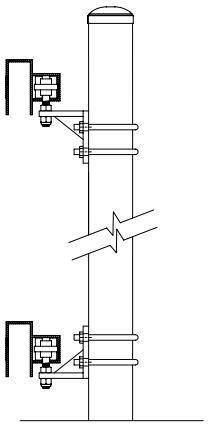

END VIEW
(INSTALLED GATE)

TRANSPORT™ CANTILEVER GATE SYSTEMS

SPECIFICATION

TransPort™ Aluminum-Framed Chain Link Cantilever Gate

2.01 MANUFACTURER

The cantilever gate system shall conform to Ameristar® TransPort™ chain link style (specify single or double), opening (specify total gate opening in feet) , height (total in feet), gate direction (specify direction gate opens from outside looking in), (specify with or without barbed wire), with (specify cross sectional size and gauge of posts) posts.

2.02 MATERIALS

A. The materials used for cantilever gate framing shall be manufactured from aluminum (Designation 6063-T6) with a yield strength of 25,000 psi, a tensile strength of 30,000 psi and a standard mill finish. The TransPort™ top track and bottom rail shall be manufactured from aluminum (Designation 6005-T5) with a yield strength of 35,000 psi, a tensile strength of 38,000 psi and a standard mill finish.

B. TransPort™ chain link cantilever gates shall be filled with the same fabric applicable to the chain link fencing material specified.

C. Each gate section shall be supplied with truss cables for proper bracing.

D. Two upper suspension rollers and two lower guide rollers shall be included with each gate.

2.03 FABRICATION

A. Components shall be precut to specified lengths.

B. All fastener holes shall be pre-drilled.

C. Completed framing components shall be tested for alignment and fit at the factory prior to shipping.

TRANSPORT™ TRACK HARDWARE

Ameristar's unique single mainframe truck roller makes it the strongest truck assembly available in the industry.

FEATURES

- Hot-Dip Galvanized
- Extra Heavy-Duty
- Solid Bar Truck Assembly
- With U-Bolts for either Round or Square Posts

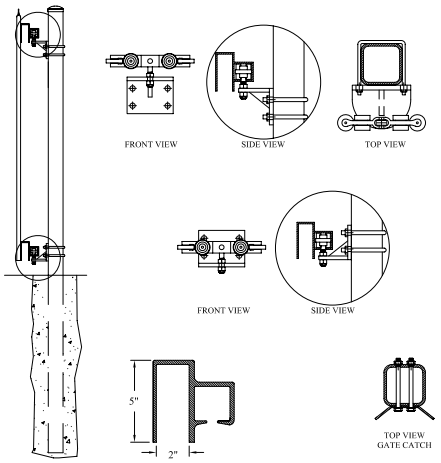

OTHER FINE AMERISTAR® GATE SYSTEMS

Ornamental Estate™
Cantilever Gates

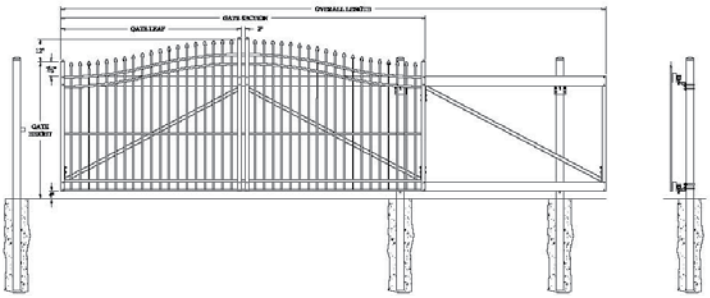

Ornamental Aluminum
Cantilever Gates

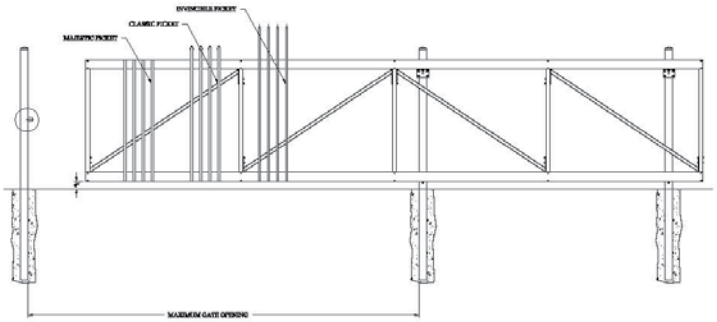

CONSTRUCTION SPECIFICATION FOR CHAIN LINK FENCE, COMMERCIAL, COLOR UTILIZING AMERISTAR® PERMACOAT® PC-20™ FENCE PIPE

PART 1 – GENERAL

1.01 WORK INCLUDED
The contractor shall provide all labor, materials and appurtenances necessary for installation of the color chain link fencing system defined herein at (specify project site).

1.02 RELATED WORK
Section 02500 – Paving and Surfacing
Section 03300 – Case-In-Place Concrete
Section 04200 – Unit Masonry

1.03 SYSTEM DESCRIPTION
The contractor shall supply a total color chain link fencing system of the design, style and strength defined herein. The system shall include all components (i.e., framework, chain link fabric, gates and fittings) required.

1.04 QUALITY ASSURANCE
The contractor shall provide laborers and supervisors who are thoroughly familiar with the type of construction involved and materials and techniques specified.

1.05 REFERENCES
A. American Society for Testing and Materials (ASTM) Standards: A90/A90M - Test Method for Weight (Mass) of Coating on Iron and Steel Articles with Zinc or Zinc-Alloy Coatings. A653/A653M - Specification for Steel Sheet, Zinc-Coated (Galvanized) or Zinc-Iron Alloy-Coated (Galvannealed) by the Hot-Dip Process. A924/A924M - Specification for General Requirements for Steel Sheet, Metallic-Coated by the Hot-Dip Process. B6 - Specification for Zinc. B117 - Practice for Operating Salt Spray (Fog) Apparatus. D1499 - Practice for Operating Light- and Water-Exposure Apparatus (Carbon-Arc Type) for Exposure of Plastics. D3359 - Test Methods for Measuring Adhesion by Tape Test. E8/E8M - Test Methods for Tension Testing of Metallic Materials. F567 - Practice for Installation of Chain-Link Fence. F626 - Specification for Fence Fittings. F668 - Specification for Poly (Vinyl Chloride) (PVC)-Coated Steel Chain-Link Fence Fabric. F900 - Specification for Industrial and Commercial Swing Gates. F934 - Specification for Standard Colors for Polymer-Coated Chain Link Fence Materials. F969 - Practice for Construction of Chain-Link Tennis Court Fence. F1043 - Specification for Strength and Protective Coatings on Metal Industrial Chain Link Fence Framework. F1184 - Specification for Industrial and Commercial Horizontal Slide Gates.

B. American Association of State Highway and Transportation Officials (AASHTO) Standards: M181 - Standard Specification for Chain-Link Fence.

C. United States Federal Supply Service General Services Administration Specifications: RR-F-191/3 - Federal Specification Sheet for Fencing, Wire and Post, Metal (Chain-Link Fence Posts, Top Rails and Braces) - Detail Specification.

1.06 SUBMITTAL
The manufacturer's literature shall be submitted prior to installation.

1.07 PRODUCT HANDLING AND STORAGE
Upon receipt at the job site, all materials shall be checked to ensure that no damages occurred during shipping or handling. Materials shall be stored in such a manner to ensure proper ventilation and drainage and to protect against damage, weather, vandalism and theft.

PART 2 - MATERIALS

2.01 MANUFACTURER
Framework for color chain link fence systems shall conform to Ameristar® PermaCoat® PC-20™ Fence Pipe (commercial weight), as manufactured by Ameristar® Fence Products in Tulsa, Oklahoma.

2.02 MATERIAL – STEEL FRAMEWORK
A. The steel material used to manufacture Ameristar® PermaCoat® PC-20™Fence Pipe shall be zinc-coated steel strip, galvanized by the hot-dip process conforming to the criteria of ASTM A653/A653M and the general requirements of ASTM A924/A924M.

B. The zinc used in the galvanizing process shall conform to ASTM B6. Weight of zinc shall be determined using the test method described in ASTM A90 and shall conform to the weight range allowance for ASTM A653, Designation G-90.

C. The framework shall be manufactured in accordance with commercial standards to meet the strength (50,000 psi minimum yield strength) and coating requirements of ASTM F1043, Group IC, Electrical Resistance Welded Round Steel Pipe, light industrial weight.

D. The exterior surface of the electrical resistance weld shall be recoated with the same type of material and thickness as the basic zinc coating.

E. The manufactured framework shall be subjected to the PermaCoat® process, a complete thermal stratification coating process (multi-stage, high-temperature, multi-layer) including, as a minimum, a six-stage pretreatment/wash (with zinc phosphate), an electrostatic spray application of an epoxy base, and a separate electrostatic spray application of a polyester finish.

F. The material used for the base coat shall be a (gray color) thermosetting epoxy; the minimum thickness of the base coat shall be two (2) mils. The material used for the finish coat shall be a thermosetting "no-mar" TGIC polyester powder; the minimum thickness of the finish coat shall be two (2) mils. The stratification coated pipe shall demonstrate the ability to endure a salt-spray resistance test in accordance with ASTM B117 without loss of adhesion for a minimum exposure time of 3,500 hours. Additionally, the coated pipe shall demonstrate the ability to withstand exposure in a weather-ometer apparatus for 1,000 hours without failure in accordance with ASTM D1499 and to show satisfactory adhesion when subjected to the cross-hatch test, Method B, in ASTM D3359. The polyester finish coat shall not crack, blister or split under normal use.

G. The color of all framework shall be (specify Black, Green or Brown) in accordance with ASTM F934.

H. The strength of Ameristar® PermaCoat® PC-20™ Fence Pipe shall conform to the requirements of ASTM F1043; the minimum weight shall not be less than 90% of the nominal weight (see Table 1). The strength of line, end, corner and pull posts shall be determined by the use of 4' or 6' cantilevered beam test. The top rail shall be determined by a 10' free-supported beam test (see Table 1). An alternative method of determining pipe strength is by the calculation of bending moment (see Table 1). Conformance with this specification can be demonstrated by measuring the yield strength of a randomly selected piece of pipe from each lot and calculating the section modulus. The yield strength shall be determined according to the methods described in ASTM E8. For materials under this specification, the 0.2 offset method shall be used in determining yield strength. Terminal posts, line posts and top/bottom rails shall be precut to specified lengths.

2.03 MATERIAL – FENCE FABRIC
A. The material for chain link fence fabric shall be manufactured from galvanized steel wire. The weight of zinc shall meet the requirements of ASTM F668, Table 4. Galvanized wire shall be PVC-coated to meet the requirements of ASTM F668. The class of the fence fabric shall be (specify Class 1 - Extruded, Class 2A - Extruded and Bonded or Class 2B - Fused and Bonded).

B. Selvage: Top edge (specify knuckled or twisted) and bottom edge (specify knuckled or twisted).

C. Color: The coating color for the fence fabric shall be (specify Black, Green or Brown). Reference ASTM F668 and ASTM F934.

D. Wire Size: The size of the steel wire core shall be (specify gauge) gauge. (See Table 2); the finished size of the coated wire shall be (specify gauge) gauge (See Table 2).

E. Height and Mesh Size: The fabric height shall be (specify height) feet high with a mesh size of (specify mesh size) inches. (See Table 2).

2.04 MATERIAL – FENCE FITTINGS
The material for fence fittings shall be manufactured to meet the requirements of ASTM F626. The coating for all fittings shall be the same PermaCoat® color coating system required for the framework (see 2.02); the color of all fittings and fasteners shall be (specify Black, Green or Brown) in accordance with ASTM F934. All fasteners shall be stainless steel.

2.05 MATERIAL – GATES
Swing gates shall be manufactured and coated to meet the requirements of ASTM F900. Slide gates shall be manufactured to meet the requirements of ASTM F1184. The color of all gates shall be (specify Black, Green or Brown) in accordance with ASTM F934.

PART 3 – EXECUTION

3.01 PREPARATION
All new installation shall be laid out by the contractor in accordance with the construction plan.

3.02 INSTALLATION
Install chain link fence in accordance with ASTM F567. For chain link tennis court fences, install in accordance with ASTM F969. Fence posts shall be set at spacings of a maximum of 10' o.c. Gate posts shall be spaced according to the gate openings specified in the construction plans. The "Paving and Surfacing," "Cast-In-Place Concrete" and "Unit Masonry" sections of this specification shall govern post base placement and material requirements. Install fabric on security side and attach with wire ties or clip to line posts at 15 inches o.c. and to rails, braces and tension wire at 24 inches o.c.

3.03 CLEANING
The contractor shall clean the jobsite of excess materials. Post hole excavations shall be scattered uniformly away from posts.

TABLE 1

Fence Industry	Decimal O.D. Equivalent		Pipe Wall Thickness		Weight		Section Modulus Inches	x	Min. Yield Strength psi	=	Max. Bending Moment lb. in.	Calculated Load (lbs.)		
												10' Free Supported	Cantilever	
O.D.	Inches	(mm)	Inches	(mm)	lb./ft.	(kg/m)							4'	6'
1-3/8"	1.315	33.40	.080	2.03	1.06	1.57	.0900	x	50,000	=	4,500	150	N/A	N/A
1-5/8"	1.660	42.16	.085	2.16	1.43	2.13	.1574	x	50,000	=	7,870	262	164	109
2"	1.900	48.26	.090	2.29	1.74	2.59	.2208	x	50,000	=	11,040	N/A	230	154
2-1/2"	2.375	60.33	.095	2.41	2.32	3.45	.3734	x	50,000	=	18,670	N/A	389	259
3"	2.875	73.03	.111	2.82	3.26	4.85	.6365	x	50,000	=	31,825	N/A	663	442

TABLE 2

Finished Gauge	Finished OD (NOM)	Core Diameter (NOM)	PVC Coating Thickness	Mesh Sizes Available	Fabric Extrusion Type	Minimum Breaking Strength
8	.162 (4.11 mm)	.120 (3.05 mm)	.015 - .025 (0.38 - 0.64 mm)	2 (50 mm); 1-3/4 (44 mm); 1 (25 mm)	CLASS 1, 2A	850#
9	.148 (3.76 mm)	.097 (2.46 mm)	.015 - .025 (0.38 - 0.64 mm)	2 (50 mm); 1-3/4 (44 mm); 1-1/4 (32 mm); 1 (25 mm)	CLASS 1, 2A	650#

CONSTRUCTION SPECIFICATION FOR CHAIN LINK FENCE, INDUSTRIAL, COLOR UTILIZING AMERISTAR® PERMACOAT® PC-40™ FENCE PIPE

PART 1 – GENERAL

1.01 WORK INCLUDED
The contractor shall provide all labor, materials and appurtenances necessary for installation of the color chain link fencing system defined herein at (specify project site).

1.02 RELATED WORK
Section 02500 – Paving and Surfacing
Section 03300 – Case-In-Place Concrete
Section 04200 – Unit Masonry

1.03 SYSTEM DESCRIPTION
The contractor shall supply a total color chain link fencing system of the design, style and strength defined herein. The system shall include all components (i.e., framework, chain link fabric, gates and fittings) required.

1.04 QUALITY ASSURANCE
The contractor shall provide laborers and supervisors who are thoroughly familiar with the type of construction involved and materials and techniques specified.

1.05 REFERENCES
A. American Society for Testing and Materials (ASTM) Standards: A90/A90M - Test Method for Weight (Mass) of Coating on Iron and Steel Articles with Zinc or Zinc-Alloy Coatings. A653/A653M - Specification for Steel Sheet, Zinc-Coated (Galvanized) or Zinc-Iron Alloy-Coated (Galvannealed) by the Hot-Dip Process. A924/A924M - Specification for General Requirements for Steel Sheet, Metallic-Coated by the Hot-Dip Process. B6 - Specification for Zinc. B117 - Practice for Operating Salt Spray (Fog) Apparatus. D1499 - Practice for Operating Light- and Water-Exposure Apparatus (Carbon-Arc Type) for Exposure of Plastics. D3359 - Test Methods for Measuring Adhesion by Tape Test. E8/E8M - Test Methods for Tension Testing of Metallic Materials. F567 - Practice for Installation of Chain-Link Fence. F626 - Specification for Fence Fittings. F668 - Specification for Poly (Vinyl Chloride) (PVC)-Coated Steel Chain-Link Fence Fabric. F900 - Specification for Industrial and Commercial Swing Gates. F934 - Specification for Standard Colors for Polymer-Coated Chain Link Fence Materials. F969 - Practice for Construction of Chain-Link Tennis Court Fence. F1043 - Specification for Strength and Protective Coatings on Metal Industrial Chain Link Fence Framework. F1184 - Specification for Industrial and Commercial Horizontal Slide Gates.

B. American Association of State Highway and Transportation Officials (AASHTO) Standards: M181 - Standard Specification for Chain-Link Fence.

C. United States Federal Supply Service General Services Administration Specifications: RR-F-191/3 - Federal Specification Sheet for Fencing, Wire and Post, Metal (Chain-Link Fence Posts, Top Rails and Braces) - Detail Specification.

1.06 SUBMITTAL
The manufacturer's literature shall be submitted prior to installation.

1.07 PRODUCT HANDLING AND STORAGE
Upon receipt at the job site, all materials shall be checked to ensure that no damages occurred during shipping or handling. Materials shall be stored in such a manner to ensure proper ventilation and drainage and to protect against damage, weather, vandalism and theft.

PART 2 - MATERIALS

2.01 MANUFACTURER
Framework for color chain link fence systems shall conform to Ameristar® PermaCoat® PC-40™ Fence Pipe (industrial weight), as manufactured by Ameristar® Fence Products in Tulsa, Oklahoma.

2.02 MATERIAL – STEEL FRAMEWORK
A. The steel material used to manufacture Ameristar® PermaCoat® PC-40™Fence Pipe shall be zinc-coated steel strip, galvanized by the hot-dip process conforming to the criteria of ASTM A653/A653M and the general requirements of ASTM A924/A924M.

B. The zinc used in the galvanizing process shall conform to ASTM B6. Weight of zinc shall be determined using the test method described in ASTM A90 and shall conform to the weight range (external and internal) of ASTM F1043, Type B.

C. The framework shall be manufactured in accordance with commercial standards to meet the strength (50,000 psi minimum yield strength) and coating requirements of the following standards: 1.) ASTM F1043, Group IC, Electrical Resistance Welded Round Steel Pipe, heavy industrial weight. 2.) M181, Type I, Grade 2, Electrical Resistance Welded Steel Pipe. 3.) RR-F-191/3, Class 1, Grade B, Electrical Resistance Welded Steel Pipe.

D. The exterior surface of the electrical resistance weld shall be recoated with the same type of material and thickness as the basic zinc coating.

E. The manufactured framework shall be subjected to the PermaCoat® process, a complete thermal stratification coating process (multi-stage, high-temperature, multi-layer) including, as a minimum, a six-stage pretreatment/wash (with zinc phosphate), an electrostatic spray application of an epoxy base, and a separate electrostatic spray application of a polyester finish.

F. The material used for the base coat shall be a (gray color) thermosetting epoxy; the minimum thickness of the base coat shall be two (2) mils. The material used for the finish coat shall be a thermosetting "no-mar" TGIC polyester powder; the minimum thickness of the finish coat shall be two (2) mils. The stratification coated pipe shall demonstrate the ability to endure a salt-spray resistance test in accordance with ASTM B117 without loss of adhesion for a minimum exposure time of 3,500 hours. Additionally, the coated pipe shall demonstrate the ability to withstand exposure in a weather-ometer apparatus for 1,000 hours without failure in accordance with ASTM D1499 and to show satisfactory adhesion when subjected to the cross-hatch test, Method B, in ASTM D3359. The polyester finish coat shall not crack, blister or split under normal use.

G. The color of all framework shall be (specify Black, Green or Brown) in accordance with ASTM F934.

H. The strength of Ameristar® PermaCoat® PC-40™ Fence Pipe shall conform to the requirements of ASTM F1043; the minimum weight shall not be less than 90% of the nominal weight (see Table 1). The strength of line, end, corner and pull posts shall be determined by the use of 4' or 6' cantilevered beam test. The top rail shall be determined by a 10' free-supported beam test (see Table 1). An alternative method of determining pipe strength is by the calculation of bending moment (see Table 1). Conformance with this specification can be demonstrated by measuring the yield strength of a randomly selected piece of pipe from each lot and calculating the section modulus. The yield strength shall be determined according to the methods described in ASTM E8. For materials under this specification, the 0.2 offset method shall be used in determining yield strength. Terminal posts, line posts and top/bottom rails shall be precut to specified lengths.

2.03 MATERIAL – FENCE FABRIC
A. The material for chain link fence fabric shall be manufactured from galvanized steel wire. The weight of zinc shall meet the requirements of ASTM F668, Table 4. Galvanized wire shall be PVC-coated to meet the requirements of ASTM F668. The class of the fence fabric shall be (specify Class 1 - Extruded, Class 2A - Extruded and Bonded or Class 2B - Fused and Bonded).

B. Selvage: Top edge (specify knuckled or twisted) and bottom edge (specify knuckled or twisted).

C. Color: The coating color for the fence fabric shall be (specify Black, Green or Brown). Reference ASTM F668 and ASTM F934.

D. Wire Size: The size of the steel wire core shall be (specify gauge) gauge. (See Table 2); the finished size of the coated wire shall be (specify gauge) gauge (See Table 2).

E. Height and Mesh Size: The fabric height shall be (specify height) feet high with a mesh size of (specify mesh size) inches. (See Table 2).

2.04 MATERIAL – FENCE FITTINGS
The material for fence fittings shall be manufactured to meet the requirements of ASTM F626. The coating for all fittings shall be the same PermaCoat® color coating system required for the framework (see 2.02); the color of all fittings and fasteners shall be (specify Black, Green or Brown) in accordance with ASTM F934. All fasteners shall be stainless steel.

2.05 MATERIAL – GATES
Swing gates shall be manufactured and coated to meet the requirements of ASTM F900. Slide gates shall be manufactured to meet the requirements of ASTM F1184. The color of all gates shall be (specify Black, Green or Brown) in accordance with ASTM F934.

PART 3 – EXECUTION

3.01 PREPARATION
All new installation shall be laid out by the contractor in accordance with the construction plan.

3.02 INSTALLATION
Install chain link fence in accordance with ASTM F567. For chain link tennis court fences, install in accordance with ASTM F969. Fence posts shall be set at spacings of a maximum of 10' o.c. Gate posts shall be spaced according to the gate openings specified in the construction plans. The "Paving and Surfacing," "Cast-In-Place Concrete" and "Unit Masonry" sections of this specification shall govern post base placement and material requirements. Install fabric on security side and attach with wire ties or clip to line posts at 15 inches o.c. and to rails, braces and tension wire at 24 inches o.c.

3.03 CLEANING
The contractor shall clean the jobsite of excess materials. Post hole excavations shall be scattered uniformly away from posts.

TABLE 1

Fence Industry	Decimal O.D. Equivalent		Pipe Wall Thickness		Weight		Section Modulus	x	Min. Yield Strength	=	Max. Bending Moment	Calculated Load (lbs.)		
												10' Free Supported	Cantilever	
O.D.	Inches	(mm)	Inches	(mm)	lb./ft.	(kg/m)	Inches		psi		lb. in.		4'	6'
1-5/8"	1.660	42.16	.111	2.82	1.84	2.74	.1961	x	50,000	=	9,805	327	204	136
2"	1.900	48.26	.120	3.05	2.28	3.39	.2810	x	50,000	=	14,050	468	293	195
2-1/2"	2.375	60.33	.130	3.30	3.12	4.64	.4881	x	50,000	=	24,405	814	508	339
3"	2.875	73.03	.160	4.06	4.64	6.90	.8778	x	50,000	=	43,890	1,463	914	610
4"	4.000	101.60	.160	4.06	6.56	9.76	1.7819	x	50,000	=	89,095	2,970	1,856	1,237

TABLE 2

Finished Gauge	Finished OD (NOM)	Core Diameter (NOM)	PVC Coating Thickness	Mesh Sizes Available	Fabric Extrusion Type	Minimum Breaking Strength
6	.192 (4.88 mm)	.148 (3.76 mm)	.015 - .025 (0.38 - 0.64 mm)	2 (50 mm); 1-3/4 (44 mm)	CLASS 2A	1290#
8	.162 (4.11 mm)	.120 (3.05 mm)	.015 - .025 (0.38 - 0.64 mm)	2 (50 mm); 1-3/4 (44 mm); 1 (25 mm)	CLASS 1, 2A	850#
9	.148 (3.76 mm)	.120 (3.05 mm)	.015 - .025 (0.38 - 0.64 mm)	2 (50 mm); 1-3/4 (44 mm); 1 (25 mm)	CLASS 1, 2A	850#

Distributed By:

Printed in U.S.A.
Rev. 04/08

SEE US IN DIRECTORY CATALOG FILES CD SWEETS.C

Call 1-800-321-8724 to request an Architectural Binder

AMERISTAR®
P.O. Box 581000 - Tulsa, OK. 74158-1000
(918) 835-0898 - 1-800-321-8724
Fax (877) 926-3747
E-Mail: mktg@ameristarfence.com
Http://www.ameristarfence.com

SECTION 32 31 19.19 – DECORATIVE METAL SECURITY FENCES AND GATES

PART 1 - GENERAL

1.1 SUMMARY

A. Section Includes:
   1. Welded security fences and gates.

1.2 ACTION SUBMITTALS

A. The manufacturer's literature shall be submitted prior to installation.

1.3 PRODUC HANDLING AND STORAGE

A. Upon receipt at the job site, all materials shall be checked to ensure that no damage occurred during shipping or handling. Materials shall be stored in such a manner to ensure proper ventilation and drainage, and to protect against damage, weather, vandalism and theft.

B. Reimbursement for labor necessary to restore or replace components that have been found to be defective under the terms of manufactures warranty shall be guaranteed for five (5) years from date of original purchase.

PART 2 - PRODUCTS

2.1 MANUFACTURERS

A. The fence system shall conform to Montage Plus standard space or Architects approved equal.

2.2 MATERIAL

A. Steel material for fence panels and post shall conform to the requirements of ASTM A653/A653M, with a minimum yield strength of 45,000 psi (310 MPa) and a minimum zinc (hot-dip galvanized) coating weight of 0.60 oz/ft^2, coating Destination G-60.

B. Material for pickets shall be ¾" square x 18 Ga. Tubing. The rails shall be steel channel, 1'15" x 1.4375" x 14 Ga. Picket holes in the rail shall be spaced 4.675" o.c. for standard picket space. Fence posts and gate posts shall meet the minimum size as indicated.

2.3 FABRICATION

A. Pickets, rails and posits shall be pre-cut to specified lengths. Rails shall be pre-punched to accept pickets.

B. Pickets shall be inserted into the pre-punched holes in the rails and shall be aligned to standard spacing using a specially calibrated alignment fixture. The aligned pickets and rails shall be joined at each picket-to-rail intersection by fusion welding process, thus completing the rigid panel assembly.

C. The manufactured panels and posts shall be subjected to an inline electrode position coating process consisting of a multi-stage pretreatment/wash with zinc phosphate. Followed by a duplex application of an epoxy primer and an acrylic topcoat. The minimum cumulative coating thickness of epoxy and acrylic shall be 2 mils. The color shall be. The coated panels and posts shall be capable of meeting the performance requirements for each quality characteristics shown in Table 2.

D. The manufactured fence system shall be capable of meeting the vertical load, and infill performance requirements for Commercial weight fences under ASTM F2408.

E. Gates with an out to leaf dimension less than and including 72 inches shall be fabricated using ornamental panel material and 1-3/4” sq. x 14ga. gate ends. All rail and upright intersections shall be joined by welding. Al pickets and rails intersections shall also be joined by welding.

PART 3 - PREPARATION

3.1 PREPARATION

A. Installation shall be laid in accordance with the construction plans.

3.2 INSTALLATION

A. Fence post shall be spaced as indicate, plus or minus ¼”. For installation that must be raked to follow sloping grades, the post spacing dimension must be measured along the grade. Fence panels shall be attached to posts with brackets supplied by the manufacturer. Posts shall be set in concrete footers having a minimum depth of 36”. Posts setting by other methods such as plated posted or grouted core-drilled footers are permissible only if shown by engineering analysis to be sufficient in strength for the intended application.

3.3 FENCE INSTALLATION MAINTENANCE

A. When cutting/drilling rails or posts adhere to the following steps to seal the exposed steel surfaces:
   1. Remove all metal shavings from cut area.
   2. Apply zinc-rich primer to thoroughly cover edge and/or drilled hole; let dry.
   3. Apply 2 coats of custom finish pain matching fence color.

Failure to seal exposed surfaces per steps 1-3 above will neglect warranty. Ameristar spray cans or paint pens shall be used to prime and finish exposed surfaces; it is recommended that paint pens be used to prevent overspray. Use of non- manufacturer's parts or components will negate the manufacturer's warranty.

3.4 GATE INSTALLATION

A. Gate posts shall be spaced according to the manufacturer's gate drawings, dependent on standard out-to-out gate leaf dimensions and gate hardware selected. Type and quantity of gate hinges shall be based on the application; weight, height, and number of gate cycles. The manufacturer's gate drawings shall identify the necessary gate hardware required for the application. Gate hardware shall be provided by the manufacture of the gate and shall be installed per manufacturer's recommendations.

3.5 CLEANING

A. The contractor shall clean the jobsite of excess materials; post-hole excavations shall be scattered uniformly away from posts.

END OF SECTION 32 31 19.19

SECTION 32 91 19.13 - TOPSOIL

PART 1 G E N E R A L

1.01 SECTION INCLUDES

A. Furnishing and placing topsoil for finish grading and for seeding, sodding, and planting.

1.02 MEASUREMENT AND PAYMENT

A. Stipulated Price (Lump Sum). If Contract is Stipulated Price Contract, payment for work in this Section is included in total Stipulated Price.

1.02 SUBMITTALS

A. Submit source of topsoil.

PART 2 P R O D U C T S

2.01 TOPSOIL

A. Topsoil shall be fertile, friable, natural sandy loam surface soil obtained from excavation or borrow operations having following characteristics:
1. pH value of between 5.5 and 6.5
2. Liquid limit: 50 or less
3. Plasticity index: 20 or less
4. Gradation: maximum of 10 percent passing No. 200 sieve

B. Topsoil shall be reasonably free of subsoil, clay lumps, weeds, non-soil materials, and other litter or contamination. Topsoil shall not contain roots, stumps, and stones larger than 2 inches.

C. Obtain topsoil from naturally well-drained areas where topsoil occurs at minimum depth of 4 inches and has similar characteristics to that found at placement site. Do not obtain topsoil from areas infected with growth of, or reproductive parts of nut grass or other noxious weeds.

PART 3 E X E C U T I O N

3.01 EXAMINATION

A. Excavate topsoil for esplanades and areas to receive grass or landscaping from areas to be further excavated. Stockpile in area approved by Project Manager.

B. Stockpile topsoil to depth not exceeding 8 feet. Cover to protect from erosion.

3.02 TOPSOIL EXCAVATION

A. Conform to excavation and stockpiling requirements of Section 31 23 00 - Pavement Excavation.

3.03 PLACEMENT

A. Place no topsoil until subgrade has been approved. For areas to be seeded or sodded, scarify or plow existing material to minimum depth of 4 inches, or as indicated on Drawings. Remove vegetation and foreign inorganic material. Place 4 inches of topsoil on loosened material and roll lightly with appropriate lawn roller to consolidate topsoil.

B. Increase depth of topsoil to 6 inches when placed over sand bedding and backfill materials specified in Section 31 23 16.13 – Excavation and Backfill for Utilities.

C. For areas to receive shrubs or trees, excavate existing material and place topsoil to depth and dimensions shown on Drawings.

D. Remove spilled topsoil from curbs, gutters, and, paved areas and dispose of excess topsoil in accordance with local requirements.

E. Place topsoil to promote good drainage and compact with light roller. Water topsoil after placement until saturated for minimum depth 6 inches, fill in and recompact areas of settlement.

3.04 PROTECTION

A. Protect topsoil from wind and water erosion until planting is completed.

END OF SECTION 32 91 19.13

SECTION 32 92 19.16 – HYDRO-MULCHING

PART 1 - GENERAL

1.1 SUMMARY

A. Refer to the Drawings, Schedules and Details for type and locations of work required herein. Furnish all labor, materials, equipment and supervision for the installation of items included within these specifications. Such work includes, but is not limited to the following:

1. Furnishing and applying hydromulch seeding including all materials and equipment required for the specified method of lawn installation.
2. Site clean up.
3. Maintenance and guarantee.

1.2 SUBMITTALS

A. Furnish copies of manufacturer's literature, certifications, or laboratory analytical data for the following items:

1. Fibre Mulch.

2. Tank Mix Fertilizer.

3. Top Dress Fertilizer.

B. All submittal data shall be forwarded in a single package to the Engineer with fourteen (14) days of award of the contract.

C. Samples:

The Owner reserves the right to request samples of materials for conformity to specifications at any time. Contractor shall furnish samples upon request. Rejected materials shall be immediately removed from the site at Contractor's expense. Cost of replacement of materials not meeting the specifications shall be paid by Contractor.

1.3 UNIT PRICE

A. Price (Lump Sum). If Contract is Stipulated Price Contract, payment for work in this Section is included in total Stipulated Price.

1.4 APPLICABLE PUBLICATIONS

A. The following publications of the latest issues listed below, but referred to thereafter by basic designation only, form a part of this specification to the extent indicated by references thereto:

1. Texas Department of Transportation 1993 Standard Specifications for construction of Highways, Street and Bridges (TxDOT).

   a. Item 162 - Sodding for Erosion Control
   b. Item 164 - Seeding for Erosion Control

1.5 RELATED WORK UNDER SEPARATE CONTRACT

A. Section 31 10 00 Site Clearing.

1.6 QUALITY ASSURANCE

A. Requirements of Regulatory Agencies:

1. Perform Work in accordance with all applicable laws, codes, and regulations required by authorities having jurisdiction over such work and provide for all inspections and permits required by Federal, State, and local authorities in furnishing, transporting, and installing materials.
2. Certificates of inspection required by law for transportation shall accompany invoice for each shipment of seed or plants. File copies of certificates with Engineer after acceptance of material.

B. Source - Quality Control

1. Seed: The Engineer shall be furnished a signed copy of statement from vendor, certifying that each container of seed delivered is labeled in accordance with the Federal Seed Act and is at least equal to requirements previously specified. Seed analysis shall be furnished prior to commencement of planting operations. Each lot of seed may be resampled and retested in accordance with latest Rules and Regulations under the Federal Seed Act at the discretion of the Engineer. If these tests reveal the seed to be below the specified pure live seed content, the Contractor shall be required to plant additional seed to compensate for the deficiency at no additional cost to the Owner. The seed retests will be conducted by the State Seed Laboratory. Allowance will be made for the actual pure live seed content of the specified grasses in determining the actual planting rate.

1.7 SCHEDULE

A. Submit a proposed work schedule to the Owner for approval at least fifteen (15) days prior to start of work under this Section. After approval, no modification shall be made to this schedule without written authorization by the Owner.

B. In general, the work shall proceed as rapidly as the site becomes available, consistent with normal seasonal limitations for planting work. Sports fields shall be seeded a year or solid sodded 6 months prior to date of scheduled use.

1.8 PRODUCT DELIVERY, HANDLING AND STORAGE

A. Furnish standard products in manufacturer's standard containers bearing original labels showing quantity, analysis and name of manufacturer.

B. Submit written requests for inspections to the Engineer at least seven (7) days prior to anticipated inspection date.

1.9 MAINTENANCE BY THE CONTRACTOR

A. The Contractor shall begin maintenance after each plant is installed and continue until Final Acceptance.

B. The Contractor's Maintenance Period shall begin upon inspection and approval at Substantial Completion and shall be for the period of 60 days.

C. The Contractor's maintenance of new planting shall consist of watering, weeding, repair of all erosion and reseeding and resodding as necessary to establish a uniform stand of the specified grasses. Contractor shall guarantee growth and coverage of hydromulch planting under this Contractor to the effect that a minimum of ninety five (95%) percent of the area planted will be covered with specified planting after sixty (60) days with no bare spots greater than ten (10) square feet. Any sod panels that are dead or dying shall be replaced.

D. Contractor shall install protective fencing around seeded areas.

E. The Contractor shall be responsible for one (1) mowing in the event that the time between seeding or sodding and Final Acceptance exceeds thirty (30) days.

F. Contractor shall make a second application of specified hydromulch planting to bare areas not meeting specified coverage as determined by the Engineer. Such replanting to be performed within sixty (60) days of initial application and immediately upon notification by Engineer to replant.

G. Apply top dress fertilizer (16-6-8) at the rate of ten (10) pounds per 1,000 square feet at twenty five (25) days after seeding.

H. Contractor shall not be held responsible for failures due to neglect by Owner, vandalism, etc., during Guarantee Period. Report such conditions to Engineer in writing.

I. Contractor shall be responsible for seeding all areas one time only. If small localized areas fail to grow, the Contractor shall reseed. The Contractor will not be required to reseed the entire area if hydromulch is per specifications and properly installed and still fails to grow.

1.10 FINAL ACCEPTANCE:

A. Work under this Section will be accepted by Engineer upon satisfactory completion of all work, but exclusive of re-application under the Guarantee Period. Final Acceptance of lawn establishment shall be as follows:

B. For Seed: Ninety Five (95%) percent uniform coverage of grass in excess of one (1") inch height. No bare spots of greater than two (2) square feet will be accepted.

C. The Engineer and/or Owner shall interpret the above. Upon Final Acceptance, the Owner will assume the responsibility for maintenance of the work.

1.11 CLEAN UP:

A.Keep all areas of work clean, neat, and orderly at all times. Keep all paved areas clean during installation operations. Clean up and removal all deleterious materials and debris from the entire work area prior to Final Acceptance to the satisfaction of Engineer.

PART 2 - MATERIALS

2.1 SEED:

A. All seed used shall be labeled in accordance with U.S. Department of Agriculture Rules and Regulations under the Federal Seed Act in effect on the date of Invitation for Bids. All seed shall be furnished in sealed standard containers unless exception is granted in writing by the Engineer. Seed which has become wet, moldy, or otherwise damaged in transit or in storage will not be acceptable. The minimum percentage by weight or pure live seed in each lot of seed shall be as follows and seed shall be planted at the rate per acre indicated under pure live seed required per acre.

Kind of Seed	Minimum % Pure Live Seed Required	Pounds Pure Live Seed Per Acre
Bermuda Grass	85	7
K.R. Bluestem	85	1
Bahiagrass (Pensacola)	85	9

Note: % Pure Live Seed = % Purity X % Germination

B. Weed seed shall not exceed ten (10%) of weight of the total of pure live seed and other material in the mixture. Johnson grass, nut grass, or other noxious weed seed will not be allowed.

2.2 FERTILIZER FOR TANK MIX:

A. Shall be 13-13-13 grade, pelleted, uniform on composition, free-flowing, and suitable for application with approved equipment. The fertilizer shall be delivered to the site in bags or other convenient containers, each fully labeled, conforming to the applicable state fertilizer laws, and bearing the name or trademark and warrant of the producer.

2.3 WOOD CELLULOSE FIBER MULCH:

A. Wood Cellulose fiber mulch, for use with the hydraulic application of grass seed and fertilizer, shall consist of specially prepared wood cellulose fiber. It shall be processed in such a manner that it will not contain germination of growth inhibiting factors. It shall be dyed an appropriate color to allow visual metering of its application. The wood cellulose fibers shall have the property of becoming evenly dispersed and suspended when agitated in water. When sprayed uniformly on the surface of the soil, the fibers shall form a blotter-like groundcover which readily absorbs water and allows infiltration to the underlying soil. Weight specifications from suppliers for all applications shall refer only to air dry weight of the fiber, a standard equivalent to eighteen (18%) percent moisture. The mulch material shall be supplied in packages having a gross weight not in excess of 100 pounds and be marked by the manufacturer to show the dry weight content. Suppliers shall be prepared to certify that laboratory and field testing of their product has been accomplished and that meets all of the foregoing requirements.

2.4 WATER:

A. Shall be free from oil, acid, alkali, salt, and other substances harmful to growth of grass. The water shall be subject to approval prior to use.

2.5 SLURRY MIX COMPONENTS PER ACRE:

Wood Cellulose Fiber Mulch ..... 2,000 pounds
Grass Seed..... (as specified)
Fertilizer (13-13-13)..... 800 pounds

2.6 TOP DRESS FERTILIZER:

A. (Delayed Application) Complete fertilizer, fifty (50%) percent of the nitrogen to the derived from natural organic sources or urea-form. Available phosphoric acid shall be from super-

phosphate, bond, or tankage. Potash shall be derived from muriate of potash containing sixty (60%) percent potash:

16% Nitrogen
6% Phosphoric Acid
8% Potash

PART 3 - EXECUTION

3.1 HYDROMULCH SEEDING ON PREPARED FINISHED GRADE

A. Bed Preparation: Immediately after the finished grade has been approved, begin hydroseeding operation to reduce excessive weed growth.

B. Special Mulching Equipment and Procedures: Hydraulic equipment used for the application of fertilizer, seed, and slurry of prepared wood fiber mulch shall have a built-in agitation system with an operating capacity sufficient of agitate, suspend, and homogeneously mix a slurry containing up to forty (40) pounds of fiber plus a combined total of seventy (70) pounds of fertilizer solids for each one hundred (100) gallons of water. The slurry distribution lines shall be large enough to prevent stoppage. The discharge line shall be equipped with a set of hydraulic spray nozzles which provide even distribution of the slurry on the slopes to be seeded. The slurry tank shall have a minimum capacity of eight hundred (800) gallons and shall be mounted on a traveling unit which may be either self-propelled or drawn with a separate unit which will place the slurry tank and spray nozzles within sufficient proximity to the areas to be seeded so as to provide uniform distribution without waste. The Engineer may authorize equipment with smaller tank capacity provided that the equipment has the necessary agitation system and sufficient pump capacity to spray the slurry in a uniform coat.

C. Mixing: Care shall be taken that the slurry preparation takes place on the site of the work. The slurry preparation should begin by adding water to the tank when the engine is at half throttle. When the water level has reached the height of the agitator shaft, good recirculation shall be established and seed shall be added. Fertilizer shall then be added, followed by wood pulp mulch. The wood pulp mulch shall only be added to the mixture after the seed and when the tank is at least one-third filled with water. The engine throttle shall be opened to full speed when the tank is half filled with water. All the wood pulp shall be added by the time the tank is two-thirds to three-fourths full. Spraying shall commence immediately when the tank is full. Spraying shall commence immediately when the tank is full. The operator shall spray the area with a uniform, visible coat by using the green color of the wood pulp as a guide.

D. Application:

1. Contractor shall obtain approval of hydromulch area preparation from the Engineer prior to application.

2. Operators of hydromulching equipment shall be thoroughly experienced in this type of application. Apply specified slurry mix in a motion to form a uniform mat at specified rate.
3. Keep hydromulch within areas designated and keep from contact with other plant material.
4. Slurry mixture which has not been applied within four (4) hours of mixing shall not be used and shall be removed from the site.
5. After application, the Contractor shall not operate any equipment over the covered area.
6. Immediately after application, thoroughly wash off any plant material, planting areas, or paved areas not intended to receive slurry mix. Keep all paved and planting areas clean during maintenance operations.
7. Refer also to the maintenance portion of this section.

E. Unseeded Areas: If, in the opinion of the Engineer, unplanted skips and areas are noted after Hydromulching, the Contractor shall be required to seed the unplanted areas with the grasses that were to have been planted at no additional cost to the Owner.

3.2 INSPECTIONS

A. Make written request for inspection prior to seeding and after areas have been seeded.

B. Submit requests for inspections to Engineer at least two (2) days prior to anticipated inspection date.

END OF SECTION 32 92 19.16

SECTION - 33 05 16.13 – PRECAST CONCRETE STRUCTURES

PART 1 G E N E R A L

1.01 SECTION INCLUDES

A. Precast concrete junction boxes, manholes for sanitary sewers, and storm sewers.

1.02 MEASUREMENT AND PAYMENT

A. Stipulated Price (Lump Sum). If Contract is Stipulated Price Contract, payment for Work in this Section is included in total Stipulated Price.

1.03 REFERENCES

A. ASTM A 307 - Standard Specification for Carbon Steel Bolts and Studs, 60,000 psi Tensile

B. ASTM A 615 - Standard Specification for Deformed and Plain Billet-Steel Bars for Concrete Reinforcement

C. ASTM C 270 - Standard Specification for Mortar for Unit Masonry

D. ASTM C 443 - Standard Specification for Joints for Circular Concrete Sewer and Culvert Pipe, Using Rubber Gaskets.

E. ASTM C 478 - Standard Specification for Precast Reinforced Concrete Manhole Sections

F. ASTM C 923 - Standard Specifications for Resilient Connectors Between Reinforced Concrete Manhole Structures and Pipes

G. ASTM C 1107 - Standard Specification for Packaged Dry, Hydraulic-Cement Grout (Non-shrink)

H. ASTM D 698 - Standard Test Method for Laboratory Compaction Characteristics of Soil Using Standard Effort (12,400 ft-lb/ft^3)

I. American Association of State Highway and Transportation Officials (AASHTO)

1.04 SUBMITTALS

A. Submit manufacturer's data and details of following items for approval:
   1. Shop drawings of manhole sections, base units and construction details, including reinforcement, jointing methods, materials and dimensions.
   2. Summary of criteria used in manhole design including, as minimum, material properties, loadings, load combinations, and dimensions assumed. Include certification from manufacturer that precast manhole design is in full accordance with ASTM C 478 and design criteria as established in Paragraph 2.01E of this Specification.
   3. Frames, grates, rings, and covers
   4. Materials to be used for pipe connections at manhole walls
   5. Materials to be used for stubs and stub plugs, if required

6. Manufacturer's data for pre-mix (bag) concrete, if used for channel inverts and benches

PART 2 P R O D U C T S

2.01 PRECAST CONCRETE MANHOLES

A. Provide manhole sections, base sections, and related components conforming to ASTM C 478. Provide base riser section with integral floors, unless shown otherwise. Provide adjustment rings which are standard components of manufacturer of manhole sections. Mark date of manufacture and name or trademark of manufacturer on inside of barrel.

B. Construct barrels for precast manholes from standard reinforced concrete manhole sections of diameter indicated on Drawings. Use various lengths of manhole sections in combination to provide correct height with fewest joints. Design wall sections for depth and loading conditions in Paragraph 2.01 E, with minimum thickness of 5 inches. Base section shall have minimum thickness of 12 inches under invert.

C. Provide tops to support HS-20 vehicle loading, and receive cast iron frame covers, as indicated on Drawings.

D. Design Loading Criteria: Manhole walls, transition slabs, cone tops, and manhole base slab shall be designed, by manufacturer, to requirements of ASTM C 478 for depth as shown on Drawings and to resist following loads.
1. AASHTO HS-20 vehicle loading applied to manhole cover and transmitted down to transition and base slabs
2. Unit soil weight of 120 pcf located above portions of manhole, including base slab projections
3. Lateral soil pressure based on saturated soil conditions producing an at-rest equivalent fluid pressure of 100 pcf
4. Internal liquid pressure based on unit weight of 63 pcf
5. Dead load of manhole sections fully supported by transition and base slabs

E. Design: Manhole walls, transition slabs, cone tops, and manhole base slab shall be designed according to requirements of ASTM C 478 and following:
1. Design additional reinforcing steel to transfer stresses at openings. Area of steel to be no less than shown on Drawings.
2. Wall loading conditions:
   a. Saturated soil pressure acting on empty manhole
   b. Manhole filled with liquid to a halfway depth as measured from invert to cover, with no balancing external soil pressure
3. Minimum clear distance between two wall penetrations shall be 12 inches or half diameter of smaller penetration, whichever is greater

G. Provide joints between sections with o-ring gaskets conforming to ASTM C 443.

H. When base is cast monolithic with portion of vertical section, extend reinforcing in vertical section into base.

I. Precast Concrete Base: Suitable cutouts or holes to receive pipe and connections. Lowest edge of holes or cutouts: For water line manhole, no less than 6 inches above inside surface of floor of base.

2.02 CONCRETE

A. Conform to requirements of Section 32 13 13 – Concrete Paving

B. Channel Inverts: Use 5 sack premix (bag) concrete or Class A concrete for inverts not integrally formed with manhole base, with minimum compressive strength of 4000 psi.

C. Cement Stabilized Sand Foundation: Provide cement stabilized sand foundation under base section in lieu of foundation slab, as shown on Drawings, conforming to requirements of Section 31 23 01 – Cement Stabilized Sand.

D. Concrete Foundation: Provide Class A concrete with minimum compressive strength of 4000 psi for concrete foundation slab under manhole base section where indicated on Drawings.

2.03 REINFORCING STEEL

A. Conform to requirements of Section 32 13 13 – Concrete Paving.

2.04 MISCELLANEOUS METALS

A. Provide cast-iron frames, rings, and covers.

2.05 DROP CONNECTIONS AND STUBS

A. Provide drop connections and stubs conforming to same pipe material requirements used in main pipe, unless otherwise indicated on Drawings.

2.06 PIPE CONNECTIONS TO MANHOLE

A. Sanitary Sewers.
1. Provide resilient connectors conforming to requirements of ASTM C 923.
Use the following materials for metallic mechanical devices as defined in ASTM C 923:
External clamps: Type 304 stainless steel
Internal, expandable clamps on standard manholes: Type 304 stainless steel, 11 gauge minimum.
Internal, expandable clamps on corrosion-resistant manholes:
1) Type 316 stainless steel, 11 gauge minimum
2) Type 304 stainless steel, 11 gauge minimum, coated with minimum 16 mil fusion-bonded epoxy conforming to AWWA C 213

B. Storm Sewer Connections:
1. Provide watertight connections in accordance with ASTM C 923.

2.07 SEALANT MATERIALS

A. Provide sealing materials between precast concrete adjustment ring and manhole cover frame, Adeka Ultraseal P201, or approved equal.

B. Provide Butyl Sealant: Provide Press-Seal EZ Stick, or equal, for HDPE rings.

2.08 BACKFILL MATERIALS

A. Conform to requirements of Section 31 23 16.13 - Excavation and Backfill for Utilities.

2.09 NON-SHRINK GROUT

A. Provide prepackaged, inorganic, flowable, non-gas-liberating, non-metallic, cement-based grout requiring only addition of water.

B. Meet requirements of ASTM C 1107 and have minimum 28-day compressive strength of 7000 psi.

PART 3 E X E C U T I O N

3.01 EXAMINATION

A. Verify that lines and grades are correct.

B. Determine if subgrade, when scarified and recompacted, can be compacted to 95 percent of maximum Standard Proctor Density according to ASTM D 698 prior to placement of foundation material and base section. When proper density is not reached, moisture condition subgrade until that density is reached or treat as unstable subgrade.

3.02 PLACEMENT

A. Install precast manholes to conform to locations and dimensions shown on Drawings.

3.03 MANHOLE BASE SECTIONS AND FOUNDATIONS

A. Place precast base on 12 inch thick (minimum) foundation of crushed stone wrapped in filter fabric, cement stabilized sand, or concrete foundation slab. Compact cement-sand in accordance with requirements of Section 31 23 01 – Cement Stabilized Sand.

B. Unstable Subgrade Treatment: When unstable subgrade is encountered, notify Project Manager for examination of subgrade to determine if subgrade has heaved upwards after being excavated. When heaving has not occurred, over-excavate subgrade to allow for 24-inch-thick layer of crushed stone wrapped in filter fabric as foundation material under manhole base. When there is evidence of heaving, provide pile-supported concrete foundation, as detailed on Drawings, under manhole base.

3.04 PRECAST MANHOLE SECTIONS

A. Install sections, joints, and gaskets in accordance with manufacturer's printed recommendations.

B. Install precast adjustment rings above tops of cones or flat-top sections as required to adjust finished elevation and to support manhole frame.

C. Seal any lifting holes with non-shrink grout.

D. Where PVC liners are required, seal joints between sections in accordance with manufacturer’s recommendations.

E. Place at least two precast concrete grade rings with thickness of 12 inches or less, under casting.

3.05 PIPE CONNECTIONS AT MANHOLES

A. Install approved resilient connectors at each pipe entering and exiting manholes in accordance with manufacturer's instructions.
   1. Where smooth exterior pipes, i.e. steel, ductile iron or PVC pipes are connected to manhole base or barrel, space between pipe and manhole wall shall be sealed with an assembly consisting of rubber gaskets or links mechanically compressed to form watertight barrier. Assemblies: “Press-Wedge,” “Res-Seal,” “Thunderline Link-Seals,” or approved equal. See Drawings for placement of assembly in manhole sections.
   2. When connecting concrete or cement mortar coated steel pipes, or as an option for connecting smooth exterior pipes to manhole base or barrel, space between pipe and manhole wall may be sealed with an assembly consisting of stainless steel power sleeve, stainless steel take-up clamp and rubber gasket. Take-up clamp: Minimum of 9/16 inch wide. Provide PSX positive seal gasket system by Press-Seal Gasket Corporation or approved equal.

B. Grout storm sewer connections to manhole unless otherwise shown on Drawings. Grout pipe penetration in place on both inside and outside of manhole.

C. Ensure no concrete, cement stabilized sand, fill, or other rigid material is allowed to enter space between pipe and edge of wall opening at and around resilient connector on either interior or exterior of manhole. If necessary, fill space with compressible material to ensure full flexibility provided by resilient connector.

D. Where new manhole is constructed on existing sewer, rigid joint pipe may be used. Install waterstop gasket around existing pipe at center of cast-in-place wall. Join ends of split waterstop material at pipe springline using an adhesive recommended and supplied by waterstop manufacturer.

E. Test connection for watertight seal before backfilling.

3.06 INVERTS FOR SANITARY SEWERS

A. Construct invert channels to provide smooth flow transition waterway with no disruption of flow at pipe-manhole connections. Conform to following criteria:

1. Slope of invert bench: 1 inch per foot minimum; 1-1/2 inches per foot maximum
2. Depth of bench to invert:
   a. Pipes smaller than 15 inches: one-half of largest pipe diameter
   b. Pipes 15 to 24 inches: three-fourths of largest pipe diameter
   c. Pipes larger than 24 inches: equal to largest pipe diameter
3. Invert slope through manhole: 0.10 foot drop across manhole with smooth transition of invert through manhole, unless otherwise indicated on Drawings.

B. Form invert channels with concrete if not integral with manhole base section. For direction changes of mains, construct channels tangent to mains with maximum possible radius of curvature. Provide curves for side inlets and smooth invert fillets for flow transition between pipe inverts.

3.07 DROP CONNECTIONS FOR SANITARY SEWERS

A. Backfill drop assembly with crushed stone wrapped in filter fabric, cement stabilized sand, or Class A concrete to form solid mass. Extend cement stabilized sand or concrete encasement minimum of 4 inches outside bells.

B. Install drop connection when sewer line enters manhole higher than 24 inches above invert of manhole.

3.08 STUBS FOR FUTURE CONNECTIONS

A. In manholes, where future connections are indicated on Drawings, install resilient connectors and pipe stubs with approved watertight plugs.

3.09 MANHOLE FRAME AND ADJUSTMENT RINGS

A. Combine precast concrete or HDPE adjustment rings so elevation of installed casting cover matches pavement surface. Seal between concrete adjustment ring and precast top section with non-shrink grout; do not use mortar between adjustment rings. Apply latex-based bonding agent to precast concrete surfaces joined with non-shrink grout. Set cast iron frame on adjustment ring in bed of approved sealant material. Install sealant bed consisting of two beads of sealant, each bead having minimum dimensions of 1/2-inch and 1/2-inch wide.

B. Wrap manhole frame and adjustment rings with external sealing material, minimum inches beyond joint between ring and frame and adjustment rings and precast section.

C. For manholes in unpaved areas, set top of frame minimum of 6 inches above existing ground line unless otherwise indicated on Drawings. In unpaved areas, encase manhole frame in non-shrink grout placed flush with face of manhole ring and top edge of frame. Provide rounded corner around perimeter.

3.10 BACKFILL

A. Place and compact backfill materials in area of excavation surrounding manholes in accordance with requirements of Section 31 23 16.13 – Excavation and Backfill for Utilities. Provide embedment zone backfill material, as specified for adjacent utilities, from manhole

foundation up to an elevation 12 inches over each pipe connected to manhole. Provide trench zone backfill, as specified for adjacent utilities, above embedment zone backfill.

B. Where rigid joints are used for connecting existing sewers to manhole, backfill under existing sewer up to springline of pipe with Class B concrete or flowable fill.

C. In unpaved areas, provide positive drainage away from manhole frame to natural grade. Provide minimum of 4 inches of topsoil. When shown on Drawings, sod disturbed areas.

3.11 PROTECTION

A. Protect manholes from damage until work has been accepted. Repair damage to manholes at no additional cost to Owner.

END OF SECTION 33 05 16.13

SECTION 33 11 00 – WATERLINES

PART 1 - GENERAL

1.1 SUMMARY

A. This section includes the following:

1. Installation of water lines.
2. Specifications identify requirements for water lines.

1.2 SUBMITTALS

A. Submit proposed methods, equipment, materials and sequence of operations for waterline construction

1.3 MEASUREMENT AND PAYMENT

B. Stipulated Price (Lump Sum). If Contract is Stipulated Price Contract, payment for work in this Section is included in total Stipulated Price.

1.4 REFERENCES

C. ANSI A 21.11/AWWA C111 - Standard for Rubber-Gasket Joints for Ductile - Iron Pressure Pipe and Fittings.

D. ANSI/NSF Standard 61 - Drinking Water System -Health Components.

E. ASTM A 126 - Standard Specification for Gray Iron Castings for Valves, Flanges, and Pipe Fittings.

PART 2 - PRODUCTS

2.1 PIPE MATERIALS

. Install pipe materials which conform to following:
1. Section 33 12 00 - Polyvinyl Chloride Pipe.

A. Conform to American National Standards Institute/National Sanitation Foundation (ANSI/NSF) Standard 61 and have certified by an organization accredited by ANSI.

PART 3 - EXECUTION

3.1 PREPARATION

. Conform to applicable installation specifications for types of pipe used.

A. Lay pipe to lines and grades shown on Drawings.

3.2 HANDLING, CLEANING AND INSPECTION

B. Handling:
1. Load, transport, unload, and otherwise handle pipe and fittings to prevent damage of any kind. Handle and transport pipe with equipment designed, constructed and arranged to prevent damage to pipe, lining and coating. Do not permit bare chains, hooks, metal bars, or narrow skids or cradles to come in contact with coatings. Where required, provide pipe fittings with sufficient interior strutting or cross bracing to prevent deflection under their own weight.
2. Reject pipe with visible cracks (not meeting exceptions) and remove from project site.

C. Cleaning: Thoroughly clean and dry interior of pipe and fittings of foreign matter before installation, and keep interior clean until Work has been accepted. Keep joint contact surfaces clean until jointing is completed. Do not place debris, tools, clothing or other materials in pipe. After pipe laying and joining operations are completed, clean inside of pipe and remove debris.

D. Inspection: Before installation, inspect each pipe and fitting for defects. Reject defective, damaged or unsound pipe and fittings and remove them from site.

3.3 EARTHWORK

E. Bedding: Use bedding materials in conformance with Section 31 23 00 – Excavation and Backfilling for utilities.

F. Pipe Embedment: Including 6-inch pipe bedding and backfill to 12 inches above top of pipe.

3.4 PIPE CUTTING

G. Cut pipe with standard wheel pipe cutters. Make cuts smooth and at right angles to axis of pipe. Bevel plain end with heavy file or grinder to remove sharp edges.

3.5 PIPING INSTALLATION

H. General Requirements:
1. Lay pipe in subgrade free of water.
2. Make adjustments of pipe to line and grade by scraping away subgrade or filling in with granular material.
3. Properly form bedding to fully support bell without wedging or blocking up bell.

3.6 DISINFECTION OF WATER LINES

A. Conform to requirements with Section 33 13 00 – Disinfection of Water Lines.

3.7 FIELD HYDROSTATIC TESTS

A. Conform to requirements with Section 31 12 14 – Hydrostatic testing of Pipelines.

END OF SECTION 33 11 00

SECTION 33 12 00 - POLYVINYL CHLORIDE PIPE

PART 1 G E N E R A L

1.01 SECTION INCLUDES

A. Polyvinyl chloride pressure pipe for water distribution, in nominal diameters 4 inches through 16 inches.

B. Polyvinyl chloride sewer pipe for gravity sewers in nominal diameters 4 inches through 24 inches.

1.02 MEASUREMENT AND PAYMENT

A. Stipulated Price (Lump Sum). If Contract is Stipulated Price Contract, payment for work in this Section is included in total Stipulated Price.

1.03 REFERENCES

A. ANSI A 21.16 (AWWA C 116) - Protective Fusion Bonded Epoxy Coating for the Interior and Exterior Surfaces of Ductile Iron and Grey Iron Fittings for Water Supply Service.

B. ASTM D 1248 - Standard Specification for Polyethylene Plastics Molding and Extrusion Materials.

C. ASTM D 1784 - Standard Specification for Rigid Poly (Vinyl Chloride) (PVC) Compounds and Chlorinated Poly (Vinyl Chloride) (CPVC) Compounds.

D. ASTM D 2241 - Standard Specification for Poly (Vinyl Chloride) (PVC) Pressure-Rated Pipe (SDR Series).

E. ASTM D 2321 - Standard Practice for Underground Installation of Thermoplastic Pipe for Sewers and Other Gravity-Flow Applications.

F. ASTM D 2444 - Standard Test Method for Determination of the Impact Resistance of Thermoplastic Pipe and Fittings by Means of a Tup (Falling Weight).

G. ASTM D 2680 - Specification for Acrylonitrile-Butadiene-Styrene (ABS) and Poly (Vinyl Chloride) (PVC) Composite Sewer Piping.

H. ASTM D 3034 - Specification for Type PSM Poly (Vinyl Chloride) (PVC) Sewer Pipe and Fittings.

I. ASTM D 3139 - Standard Specification for Joints for Plastic Pressure Pipes Using Flexible Elastomeric Seals.

J. ASTM D 3212 - Standard Specification for Joints for Drain and Sewer Plastic Pipes Using Flexible Elastomeric Seals.

K. ASTM F 477 - Standard Specification for Elastomeric Seals (Gaskets) for Joining Plastic Pipe.

L. ASTM F 794 - Standard Specification for Poly (Vinyl Chloride) (PVC) Profile Gravity Sewer Pipe and Fittings Based on Controlled Inside Diameter.

M. AWWA C 110 - American National Standard for Ductile-Iron and Gray-Iron Fittings, 3 Inches Through 48 Inches for Water.

N. AWWA C 111 - American National Standard for Rubber-Gasket Joints for Ductile-Iron Pressure Pipe and Fittings.

P. AWWA C 900 - Standard for Polyvinyl Chloride (PVC) Pressure Pipe, 4 Inches Through 12 Inches for Water Distribution.

Q. AWWA C 909 - Standard for Molecularly-Oriented Polyvinyl Chloride (PVCO) Pressure Pipe, 4 Inches through 12 Inches (100mm through 300 mm), for Water Distribution.

R. PPI TR3 - Policies and Procedures for Developing Recommended Hydrostatic Design Stresses for Thermoplastic Pipe Materials.

S. UNI-B-13 - Recommended Standard Performance Specification for Joint Restraint Devices for Use with Polyvinyl Chloride Pipe.

1.04 SUBMITTALS

A. Submit shop drawings showing design of new pipe and fittings indicating alignment and grade, laying dimensions, fabrication, fittings, flanges, and special details.

PART 2 P R O D U C T S

2.01 MATERIAL

A. Use PVC compounds in manufacture of pipe that contain no ingredient in amount that has been demonstrated to migrate into water in quantities considered to be toxic.

B. Furnish PVC pressure pipe manufactured from Class 12454-A or Class 12454-B virgin PVC compounds as defined in ASTM D 1784. Use compounds qualifying for rating of 4000 psi for water at 73.4 F per requirements of PPI TR3. Provide pipe which is homogeneous throughout, free of voids, cracks, inclusions, and other defects, uniform as commercially practical in color, density, and other physical properties. Deliver pipe with surfaces free from nicks and scratches with joining surfaces of spigots and joints free from gouges and imperfections which could cause leakage.

C. Water Service.
   1. Provide self-extinguishing PVC pipe that bears Underwriters' Laboratories mark of approval and is acceptable without penalty to Texas State Fire Insurance Committee for use in fire protection lines.
   2. Bear National Sanitation Foundation Seal of Approval (NSF-PW).

D. Gaskets:

1. Gaskets shall meet requirements of ASTM F 477. Use elastomeric factory-installed gaskets to make joints flexible and watertight.
2. Flat Face Mating Flange: Full faces 1/8-inch-thick ethylene propylene (EPR) rubber.
3. Raised Face Mating Flange: Flat ring 1/8-inch ethylene propylene (EDR) rubber, with filler gasket between OD of raised face and flange OD to protect flange from bolting moment.

E. Lubricant for rubber-gasketed joints: Water soluble, non-toxic, non-objectionable in taste and odor imparted to fluid, non-supporting of bacteria growth, having no deteriorating effect on PVC or rubber gaskets.

2.02 WATER SERVICE PIPE

A. Pipe 4 inch through 12 inch: AWWA C 900, AWWA C 909, Class 150, DR 18; AWWA C 900, Class 200, DR 14 as alternate to offset pipe sections; nominal 20-foot lengths; cast-iron equivalent outside diameters.

B. Make curves and bends by deflecting joints. Do not exceed maximum deflection recommended by pipe manufacturer. Submit details of other methods of providing curves and bends for review by Engineer.

C. Hydrostatic Test: AWWA C 900, AWWA C 905, AWWA C 909, ANSI A 21.10 (AWWA C 110); at point of manufacture; submit manufacturer's written certification.

2.03 GRAVITY SEWER PIPE

A. PVC gravity sanitary sewer pipe and storm sewer pipe shall be in accordance with provisions in following table:
1. Solid Wall, ASTM D3034, SDR 26 / PS 115 for 4” to 10”
2. Solid Wall, ASTM D3034, SDR 35 / PS 46 for 10” to 12”

B. Joints: Spigot and integral wall section bell with solid cross section elastomeric or rubber ring gasket conforming to requirements of ASTM D 3212 and ASTM F 477, or ASTM D 3139 and ASTM F 477. Gaskets shall be factory-assembled and securely bonded in place to prevent displacement. Manufacturer shall test sample from each batch conforming to requirements ASTM D 2444.

C. Fittings: Provide PVC gravity sewer sanitary bends, tee, or wye fittings for new sanitary sewer construction. PVC pipe fittings shall be full-bodied, either injection molded or factory fabricated. Saddle-type tee or wye fittings are not acceptable.

2.04 BENDS AND FITTINGS FOR PVC PRESSURE PIPE

A. Bends and Fittings: ANSI A 21.10 or ANSI A 21.53, ductile iron; ANSI A 21.11 single rubber gasket push-on type joint; minimum 150 psi pressure rating. Approved restrained joints, 250 200 psi, may be provided for up to 12 inches in diameter (water or sanitary).

B. Provide approved restrained joint fittings: Integral restrained joint fittings and pipe do not require secondary restraint.

PART 3 E X E C U T I O N

3.01 PROTECTION

A. Store pipe under cover out of direct sunlight and protect from excessive heat or harmful chemicals in accordance with manufacturer's recommendations.

3.02 INSTALLATION

A. Install flexible pipe, including "semi-rigid" pipe, to conform to standard practice described in ASTM D 2321, and as described in this Section. Where an apparent conflict occurs between standard practice and requirements of this Section, this Section governs.

B. Install pipe in accordance with the manufacturers recommended installation procedures.

C. Use Cement Stabilized Sand bedding and backfill, Section 31 23 01 – Cement Stabilized Sand for sanitary sewers and Bank sand bedding and backfill for water lines.

D. Install PVC water service pipe to clear utility lines and have minimum depth of cover below property line grade of street, unless otherwise required by Drawings: Water service pipe 2 feet of cover.

E. Avoid imposing strains that will overstress or buckle pipe when lowering pipe into trench.

F. Hand shovel pipe bedding under pipe haunches and along sides of pipe barrel and compact to eliminate voids and ensure side support.

G. Store PVC pipe under cover out of direct sunlight. Protect pipe from excessive heat or harmful chemicals. Prevent damage by crushing or piercing.

H. Allow PVC pipe to cool to ground temperature before backfilling when assembled out of trench to prevent pullout due to thermal contraction.

I. Field Cutting of Pipe Ends:

1. Perform by workers certified by manufacturer.
2. Use a PVC pipe cutter and provide square ends.
3. Use manufacturer approved power routing and grooving tool to field fabricate required pipe groove.

END OF SECTION 33 12 00

SECTION 33 12 14 – HYDROSTATIC TESTING OF PIPELINES

PART 1 GENERAL

1.1 SUMMARY

A. This section includes the following:
1. Field hydrostatic testing of newly installed water pipelines.

1.2 MEASUREMENT AND PAYMENT

A. Stipulated Price (Lump Sum). If Contract is Stipulated Price Contract, payment for work in this Section is included in total Stipulated Price.

PART 2 PRODUCTS - Not Used

PART 3 EXECUTION

3.1 PREPARATION

A. Disinfect water system pipelines prior to hydrostatic testing.

B. Hydrostatically test newly installed water pipelines after disinfection, when required, and before commissioning the new water lines.

C. Unless prior arrangements have been made with the Owner, water for testing shall be provided by the Contractor.

D. Test pipelines in lengths between valves or plugs

E. Conduct hydrostatic tests in presence of Owner.

3.2 TEST PROCEDURES

A. Furnish, install, and operate connections, pump, meter and gages necessary for hydrostatic testing.

B. Allow pipeline to sit minimum of 24 hours from time it is initially disinfected until testing begins, to allow pipe wall or lining material to absorb water. Periods of up to 7 days may be required for mortar lining to become saturated.

C. For small diameter pipelines, expel air and apply minimum test pressure of 125 psi.

D. Begin test by 9:00 a.m. unless otherwise approved by Owner. Maintain test pressure for 8 hours. When large quantity of water is required to maintain pressure during test, discontinue testing until cause of water loss is identified and corrected.

3.3 ALLOWABLE LEAKAGE FOR WATERLINES

A. During hydrostatic tests, no leakage will be allowed for sections of water lines consisting of welded joints.

B. Maximum allowable leakage for water lines with rubber gasketed joints: 3.19 gallons per inch nominal diameter per mile of pipe per 24 hours while testing.

3.4 CORRECTION FOR FAILED TESTS

A. Repair joints showing visible leaks on surface regardless of total leakage shown on test. Check valves and fittings to ensure that no leakage occurs that could affect or invalidate test. Remove cracked or defective pipes, fittings, and valves discovered during pressure test and replace with new items.

B. Owner may require failed lines to be disinfected after repair and prior to retesting. Conduct and pay for subsequent disinfection operations in accordance with requirements of Section 33 13 00 - Disinfection of Water Lines. Pay for water required for additional disinfection and re-testing.

C. Repeat test until satisfactory results are obtained.

3.5 COMPLETION

A. Upon satisfactory completion of testing, remove risers remaining from disinfection and hydrostatic testing, and backfill excavation promptly.

END OF SECTION 33 12 14

SECTION 33 12 16 – GATE VALVES

PART 1 GENERAL

1.1 SUMMARY

A. This section includes the following:

1. Gate valves.

1.2 SUBMITTALS

A. Submit manufacturer's product data for proposed valves for approval.

1.3 MEASUREMENT AND PAYMENT

A. Stipulated Price (Lump Sum). If Contract is Stipulated Price Contract, payment for work in this Section is included in total Stipulated Price.

1.4 REFERENCES

A. ASTM A 307 - Standard Specification for Carbon Steel Bolts and Studs, 60,000 psi Tensile.

B. ASTM B 62 - Standard Specification for Composition Bronze or Ounce Metal Casting.

C. ASTM D 429 - Standard Test Methods for Rubber Property-Adhesion to Rigid Substrates.

D. ASTM B 763 - Standard Specification for Copper Alloy Sand Casting for Valve Application.

E. AWWA C 500 - Standard for Metal-Seated Gate Valves for Water Supply Service.

F. AWWA C 509 - Standard for Resilient-Seated Gate Valves for Water Supply Service.

G. AWWA C 515- Standard for Reduced Wall, Resilient- Seated Gate Valves for Water Supply Service.

H. AWWA C 550 - Standard for Protective Epoxy Interior Coatings for Valves and Hydrants.

1.5 QUALITY CONTROL

A. Submit manufacturer's affidavit that gate valves are manufactured in the United States and conform to stated requirements of AWWA C 500, AWWA C 509, AWWA C 515, and this Section, and that they have been satisfactorily tested in the United States in accordance with AWWA C 500, AWWA C 509, and AWWA C 515.

PART 2 PRODUCTS

2.1 MATERIALS

A. Gate Valves: AWWA C 500, AWWA C 509, AWWA C 515 and additional requirements of this Section. Direct bury valves and those in subsurface vaults open clockwise; aboveground and plant valves open counterclockwise.

B. If type of valve is not indicated on Drawings, use gate valves as line valves for sizes 20-inches and smaller. When type of valve is indicated, no substitute is allowed.

C. Gate Valves 1-1/2 inches in Diameter and Smaller: 125 psig; bronze; rising-stem; single-wedge; disc type; screwed ends

D. Coatings for Gate Valves 2 inches and larger: AWWA C 550 non-toxic, imparts no taste to water, functions as physical, chemical, and electrical barrier between base metal and surroundings, minimum 8-mil-thick, fusion-bonded epoxy. Prior to assembly of valve, apply protective coating to interior and exterior surfaces of body.

E. Gate Valves 2 inches in diameter: Iron body, double disc or resilient-seated, non-rising stem, 150-pound test, 2-inch square nut operating clockwise to open.

F. Gate Valves 3 inches to 12 inches in diameter: Non-directional, standard-wall resilient seated (AWWA C 509), parallel seat double disc (AWWA C 500), or reduced-wall resilient seated gate valves (AWWA C 515), 200 psig pressure rating, bronze mounting, push-on bell ends with rubber joint rings, and nut-operated unless otherwise specified. Provide approved standard-wall resilient seated valves. Provide approved reduced-wall resilient seated valves. Provide approved double disc valves. Comply with following requirements unless otherwise specified in Drawings:
   1. Design: Fully encapsulated rubber wedge or rubber seat ring mechanically attached with minimum 304 stainless-steel fasteners or screws; threaded connection isolated from water by compressed rubber around opening.
   2. Body: Cast or ductile iron, flange bonnet and stuffing box together with ASTM A 307 Grade B bolts. Manufacturer's initials, pressure rating, and year manufactured shall be cast in body.
   3. Bronze: Valve components in waterway to contain not more than 15 percent zinc and not more than 2 percent aluminum.
   4. Stems: ASTM B 763 bronze, alloy number-995 minimum yield strength of 40,000 psi; minimum elongation in 2-inches of 12 percent, non-rising.

5. O-rings: For AWWA C 500, Section 3.12.2. For AWWA C 509, Sections 2.2.6 and 4.8.2. For AWWA C 515, Section 4.2.2.5.
6. Stem Seals Consist of three O-rings, two above and one below thrust collar with anti-friction washer located above thrust collar for operating torque.

A. Stem Nut: Independent or integrally cast of ASTM B 62 bronze.

B. Resilient Wedge: Molded, synthetic rubber, vulcanized and bonded to cast or ductile iron wedge or attached with 304 stainless steel screws tested to meet or exceed ASTM D 429 Method B; seat against epoxy-coated surface in valve body.

C. Bolts: AWWA C 500 Section 3.4, AWWA C 509 Section 4.4 or AWWA C 515 Section 4.4.4; stainless steel; cadmium plated, or zinc coated.

G. Gate Valves Extension Stem: When shown on Drawings, provide non-rising, extension stem having coupling sufficient to attach securely to operating nut of valve. Upper end of extension stem shall terminate in square wrench nut no deeper than 4 feet from finished grade or as shown on Drawings. Support extension stem with an arm attached to wall of manhole or structure that loosely holds extension stem and allows rotation in the axial direction only.

H. Gate Valves in Factory Mutual (Fire Service) Type Meter Installations: Conform to provisions of this specification; outside screw and yoke valves; carry label of Underwriters' Laboratories, Inc.; flanged, Class 125; clockwise to close.

PART 3 EXECUTION

3.1 INSTALLATION

A. Earthwork. Conform to applicable provisions of Section 31 23 00 - Excavation and Backfilling for Utilities.

B. Operation-Do not use valves for throttling without prior approval of manufacturer.

3.2 SETTING VALVES AND VALVE BOXES

A. Remove foreign matter from within valves prior to installation. Inspect valves in open and closed positions to verify that parts are in satisfactory working condition.

B. Install valves and valve boxes where shown on Drawings. Set valves plumb and as detailed. Center valve boxes on valves. Carefully tamp earth around each valve box for minimum radius of 4 feet, or to undisturbed trench face when less than 4 feet. Install valves completely closed when placed in water line.

C. For pipe section of each riser, use only 6 inch, ductile iron Class 51, or DR18 PVC pipe cut to proper length. Riser must be installed to allow complete access for operation of valve. Assemble and brace box in vertical position as indicated on Drawings.

3.3 DISINFECTION AND TESTING

A. Conform to requirements with Section 33 13 00 – Disinfection of Water utility Distribution.

B. Solid-Wedge Gate Valves: Apply hydrostatic pressure equal to twice rated working pressure of valve with both ends bulkheaded and gate open. Valve shall show no leakage through metal, flanged joints, or stem seals. Test at rated working pressure, applied through bulkheads alternately to each side of closed gate with opposite side open for inspection. Valve shall show no leakage through metal, flanged joints, or stem-seals. Do not exceed leakage rate of 1 oz/hr/inch of nominal valve size.

C. Repair or replace valves which exceed leakage rate.

3.4 PAINTING OF VALVES

A. Paint valves in vaults, stations, and above ground with approved paint.

END OF SECTION 33 12 16

SECTION 33 12 19 – FIRE HYDRANTS

PART 1 - GENERAL

1.1 SUMMARY

A. This section includes the following:

1. Fire hydrants.
2. Adjustment of fire hydrants and gate valves.

1.2 SUBMITTALS

A. Submit name of hydrant manufacturer, type of bonnet paint, and engineering control drawing number for hydrant proposed for use

1.3 MEASUREMENT AND PAYMENT

A. Stipulated Price (Lump Sum). If Contract is Stipulated Price Contract, payment for work in this Section is included in total Stipulated Price.

1.4 REFERENCES

A. AWWA C502, Standard for Dry Barrel Fire Hydrants

B. AWWA C 550 - Standard for Protective Epoxy Interior Coatings for Valves and Hydrants

C. SSPC SP2 - Hand Tool Cleaning

D. SSPC SP3 - Power Tool Cleaning

E. SSPC SP10 - Near-White Blast Cleaning

F. SSPC SP11 - Power Tool Cleaning to Bare Metal

G. SSPC Paint Spec No.21

H. SSPC-Paint 21 - White or Colored Silicone Alkyd Paint

I. SSPC-Paint 25 - Zinc Oxide, Alkyd, Linseed Oil Primer for Use Over Hand Cleaned Steel, Type I and Type II

J. SSPC-Paint 104 - White or Tinted Alkyd Paint

K. Federal Standard A-A-2962A - Enamel, Alkyd, Solvent Based Low VOC

PART 2 - PRODUCTS

2.1 HYDRANTS

A. Provide hydrants in conformance with AWWA C 502, Standard for Dry Barrel Fire Hydrants from the following list:
1. Centurion A423 Option 110 (Super Centurion 250)
2. Metropolitan 250
3. Clow 5 ¼” Medallioin
4. American Darling B84B
5. Kennedy - Guardian K81A

B. Provide lower hydrant barrel fabricated from Ductile Iron Pipe as single piece, connected to upper hydrant barrel by means of joint coupling that will provide three hundred sixty degree (360) rotation of upper barrel.

2.2 LEADS

A. Branches (Leads): Conform to requirements of Section 33 12 00 - Polyvinyl Chloride Pipe.

2.3 HYDRANT PAINTING

A. Exterior Above Traffic Flange (Including Bolts & Nuts).
1. Surface preparation to be in accordance with SSPC-SP 10 (MACE 2) near white blast cleaned surface.
2. Coat with three coat alkyd/silicone alkyd system with total dry film thickness (DFT) of 6 - 9 mils as follows:
   a. Prime Coat - Oil modified alkyd primer, to be in general conformance with SSPC Paint Specification No. 25. Total dry film thickness (DFT) 2 - 3 mils.
   b. Intermediate Coat - Heavy Duty Industrial Alkyd Enamel to be in general conformance with SSPC Paint Specification No. 104, and Federal Standard A-A-2962A. Total dry film thickness (DFT) of 2 -3 mils.
   c. Finish Coat - Silicone Alkyd Resin Enamel to be in general conformance with SSPC Paint Specification No. 21. Total dry film thickness (DFT) to be 2 - 3 mils. Exception - hydrant bonnet shall not be finished shop coated, only intermediate coated. Install color coded finish coating of bonnet in field.
   d. Bonnet Paint - Field apply finish coat of Silicone Alkyd Resin Enamel to be in general conformance with SSPC Paint Specification No. 21. Dry film thickness of 2 - 3 mils. Bonnet colors are to be as specified in Paragraph 3.01 to designate the appropriate size of water supply line.
3. Colors - Primer: Manufacturers standard color. Finish coat of hydrant body: Blue. Connection caps: Finished coated white. Paint white band of finish coat two (2) inches in width on hydrant body approximately six inches (6") above and parallel to traffic flange. Intermediate coat : Contrasting color to blue finish, such as white.

B. Field Maintenance Painting (Exterior Above Traffic Flange)

1. Surface Preparation to be in accordance with SSPC - SP2, Hand Tool Cleaning, or SSPC - SP3, Power Tool Cleaning, depending on condition of existing paint and extent of corrosion. It is not necessary to remove tightly adhered mill scale, rust, and paint. Mill scale, rust and paint are considered tightly adherent when they cannot be removed with dull putty knife. In some severe cases where it is necessary to remove majority of existing paint, surface should be cleaned in accordance with SSPC -SP11, Power Tool Cleaning to Bare Metal.
2. When surface is cleaned to bare metal (SSPC - SP11), coat hydrant with three coat Alkyd/Silicone Alkyd system in accordance with Paragraph 2.03.B.2 as for new hydrants. When surface is cleaned to SSPC - SP2 or SSPC - SP3, coat hydrant with Silicone Alkyd Resin Enamel in general conformance with SSPC Paint Specification No. 21. Total dry film thickness of 3 - 6 mils.

D. Exterior Below Traffic Flange
1. Surface preparation in accordance with SSPC- SP10 (MACE 2) Near White Blast Cleaned Surface.
2. Primer and intermediate coat: coal tar epoxy in general conformance with SSPC Paint Specification No. 16. Apply two (2) coats with dry film thickness (DFT) of 8 - 10 mils each for total DFT of 16 -20 mils.
3. Finish coat: Water based vinyl acrylic mastic Apply one coat with dry film thickness of 6 - 8 mils. Color of finish coat to be same as finish coat for exterior above traffic flange, i.e., blue. (Acro 555 Crystal Blue, or equivalent.)

E. Interior Surfaces Above and Below Water Line Valve
1. Material used for internal coating of hydrant interior ferrous surfaces below water line valve must be NSF certified as suitable for contact with potable water as required by Chapter 290, Rules and Regulations for Public Water Systems, Texas Natural Resources Conservation Commission.
2. Coating shall be liquid or powder epoxy system in accordance with AWWA Standard C - 550 (latest revision). Coating may be applied in two or three coats, according to manufacturer's recommendations, for total dry film thickness of 12 -18 mils.

PART 3 - EXECUTION

3.1 INSTALLATION

A. Set fire hydrant plumb and brace at locations and grades as shown on Drawings. When barrel of hydrant passes through concrete slab, place 1-inch-thick piece of standard sidewalk expansion joint material around section of barrel passing through concrete.

B. Locate nozzle center line minimum 18 inches above finish grade.

C. Do not cover drain ports when placing concrete thrust block.

D. Install branches (leads) in accordance with Section 33 11 00 - Waterlines.

E. Coating Requirements:

1. Apply coatings in strict accordance with manufacturer's recommendations. No requirements of this specification shall cancel or supersede written directions and recommendations of specific manufacturer so as to jeopardize integrity of applied system.

2. Furnish affidavit of compliance that coatings furnished complies with requirements of this specification and referenced standards, as applicable.

F. Use following color code for field coating of hydrant bonnet to indicate size of water line supplying hydrant:

Supply Water Line Diameter (inches)	Bonnet Color
8 Meter	White

END OF SECTION 33 12 19

SECTION 33 13 00 – DISINFECTION OF WATER LINES

PART 1 GENERAL

1.1 SUMMARY

A. This section includes the following:

1. Disinfection of potable water lines.

1.2 MEASUREMENT AND PAYMENT

A. Stipulated Price (Lump Sum). If the Contract is a Stipulated Price Contract, payment for work in this Section is included in the total Stipulated Price.

B. Adjusting Payment for Retesting.

1. Subsequent disinfection operations which may be necessary due to nonconforming or incomplete construction will be charged to Contractor. Charges will be deducted from retainage amounts when construction estimates are processed for final payment.

2. Total charge will consist of base charge of $135.00 plus footage charge based on number of feet of specified diameter pipe in construction project. Footage charge is as follows:

Size of Pipe	Charge per Linear Foot
2 inch to 4 inch	$0.03
6 inch	$0.04
8 inch	$0.05
10 inch to 12 inch	$0.07

1.3 REFERENCES

A. AWWA C 651 - Standard for Disinfecting Water Mains.

PART 2 PRODUCTS - Not Used

PART 3 EXECUTION

3.1 CONDUCTING DISINFECTION

A. Promptly disinfect water lines constructed before tests are conducted on water lines and before water lines are commissioned.

B. Unless prior arrangements have been made with the Owner, water for disinfection and flushing will be furnished by Contractor.

C. Unless otherwise provided in Contract Documents, disinfection operations will be performed by Owner.

D. Coordinate chlorination operations through Owner.

3.2 PREPARATION

A. Provide temporary blind flanges, cast-iron sleeves, plugs, necessary service taps, copper service leads, risers and jumpers of sizes, location and materials, and other items needed to facilitate disinfection of new water lines prior to connection to main water distribution system. Normally, each valved section of water line requires two each 3/4-inch taps. A 2-inch minimum blow-off is required for water lines up to and including 12-inch diameter.

B. Slowly fill each section of pipe with water in manner approved by Owner. Average water velocity when filling pipeline should be less than one foot per second and shall not, under any circumstance, exceed 2 feet per second. Before beginning disinfection operations, expel air from pipeline.

D. Backfill excavations immediately after installation of risers or blow-offs.

E. Install blow-off valves at end of water line to facilitate flushing of dead-end water lines.

F. Correct problems that may prevent disinfection operations prior to advising Owner to perform disinfection work.

G. Notify and coordinate with Owner minimum of 72 hours before disinfection work is to be performed. Assist Owner during during disinfection operations.

3.3 BACTERIOLOGICAL TESTING

A. After disinfection and flushing of water lines, bacteriological tests will be performed by Owner's testing laboratory. When test results indicate need for additional disinfection of water lines based upon Texas Department of Health requirements, assist Owner with additional disinfection operations.

3.4 COMPLETION

A. Upon completion of disinfection and testing, remove risers except those approved for use in subsequent hydrostatic testing, and backfill excavation promptly.

END OF SECTION 33 13 00

SECTION 33 30 00 – GRAVITY SANITARY SEWERS

PART 1 GENERAL

1.1 SUMMARY

A. This section includes the following:

1. Gravity sanitary sewers and appurtenances, including stacks and service connections.

1.2 SUBMITTALS

A. Submit proposed methods, equipment, materials and sequence of operations for sewer construction.

B. Test Reports: Submit test reports and inspection videos as specified in Part 3 of this Section. Video tapes become property of Owner.

1.3 MEASUREMENT AND PAYMENT

A. Stipulated Price (Lump Sum). Contract is Stipulated Price Contract, payment for work in this Section is included in total Stipulated Price.

1.4 QUALITY ASSURANCE

A. Qualifications. Install sanitary sewer that is watertight both in pipe-to-pipe joints and in pipe-to-manhole connections.

B. Regulatory Requirements.
1. Lay gravity sewer lines in straight alignment and grade.

1.5 DELIVERY, STORAGE, AND HANDLING

A. Inspect pipe and fittings upon arrival of materials at job site.

B. Handle and store pipe materials and fittings to protect them from damage due to impact, shock, shear or free fall. Do not drag pipe and fittings along ground. Do not roll pipe unrestrained from delivery trucks.

C. Use mechanical means to move or handle pipe. Employ acceptable clamps, rope or slings around outside barrel of pipe and fittings. Do not use hooks, bars, or other devices in contact with interior surface of pipe to lift or move lined pipe.

PART 2 PRODUCTS

2.1 PIPE

A. Provide piping materials for gravity sanitary sewers of sizes and types indicated on Drawings or as specified.

2.2 PIPE MATERIAL SCHEDULE

A. Unless otherwise shown on Drawings, use pipe materials that conform to requirements specified in one or more of following Sections:
   1. Section 33 12 00 - Polyvinyl Chloride Pipe.

B. Where shown on Drawings, provide pipe meeting minimum class, dimension ratio, or other criteria indicated.

C. Pipe materials other than those listed above shall not be used for gravity sanitary sewers.

2.3 APPURTENANCES

A. Service Connections. Use full bodied fittings.

2.4 BEDDING, BACKFILL, AND TOPSOIL MATERIAL

A. Bedding; use Cement Stabilized Sand 6-inches all around the pipe.

B. Backfill with select backfill material compacted to 95% standard Proctor density.

C. Topsoil: Conform to requirements for Topsoil.

PART 3 EXECUTION

3.1 PREPARATION

A. Perform work in accordance with OSHA standards. Employ trench safety system for excavations over 5 feet deep.

B. Immediately notify agency or company owning utility line which is damaged, broken or disturbed. Obtain approval from Project Manager and agency or utility company for repairs or relocations, either temporary or permanent.

C. Install and operate dewatering and surface water control measures adequate to maintain a dry trench bottom.

G. Do not allow sand, debris or runoff to enter sewer system.

3.2 EXCAVATION

A. Line and Grade. Establish required uniform line and grade in trench from benchmarks identified by Project Manager. Maintain this control for minimum of 20 feet behind and ahead of

pipe-laying operation. Use laser beam equipment to establish and maintain proper line and grade of work. Use of appropriately sized grade boards which are substantially supported is also acceptable. Protect boards and location stakes from damage or dislocation.

B. Trench Excavation. Excavate pipe trenches to depths shown on Drawings.

3.3 PIPE INSTALLATION BY OPEN CUT

A. Install pipe in accordance with pipe manufacturer's recommendations and as specified in following paragraphs.

B. Install pipe only after excavation is completed, bottom of trench fine graded, bedding material is installed, and trench has been approved by Project Manager.

C. Install pipe to line and grade indicated. Place pipe so that it has continuous bearing of barrel on bedding material and is laid in trench so interior surfaces of pipe follow grades and alignment indicated. Provide bell holes where necessary.

D. Install pipe with spigot ends toward downstream end of flow such that water flows into bell and out the spigot.

E. Form concentric joint with each section of adjoining pipe so as to prevent offsets.

F. Keep interior of pipe clean as installation progresses. Remove foreign material and debris from pipe

G. Provide lubricant, place and drive home newly laid sections with come-a-long winches so as to eliminate damage to sections. Install pipe to "home" mark where provided. Use of back hoes or similar powered equipment will not be allowed unless protective measures are provided and approved in advance by Project Manager.

H. Keep excavations free of water during construction and until final inspection.

I. When work is not in progress, cover exposed ends of pipes with approved plug to prevent foreign material from entering pipe.

3.4 INSTALLATION OF APPURTENANCES

A. Service Connections. Install service connections to existing Manhole using approved connections and methods.

3.5 INSPECTION AND TESTING

A. Visual Inspection: Check pipe alignment for straight.

B. Pipe Leakage Test. Test in accordance with Section 33 31 14 – Acceptance Testing for Sanitary Sewers.

3.6 BACKFILL AND SITE CLEANUP

A. Backfill and compact soil in accordance with Section 31 23 00 - Excavation and Backfill for Utilities.

B. Backfill trench in specified lifts only after pipe installation is approved by Project Manager.

C. Repair and replace removed or damaged pavement, curbs, gutters, and sidewalks as specified in Section 32 13 13 – Concrete Paving.

D. Provide hydromulch seeding in areas of commercial, industrial or undeveloped land use over surface of ground disturbed during construction and not paved or not designated to be paved. Grade surface at uniform slope to natural grade as indicated on Drawings. Provide minimum of 4 inches of topsoil and apply hydromulch seeding.

E. Provide sodding in areas of residential land use over surface of ground disturbed during construction and not paved or not designated to be paved. Grade surface at uniform slope to natural grade as indicated on Drawings. Provide minimum of 4 inches of topsoil and Sod disturbed areas.

3.7 POST-INSTALLATION TELEVISION INSPECTION

A. Prior to final acceptance of newly constructed gravity sanitary sewers, perform cleaning and closed circuit television inspection. Cleaning shall include utilizing variable pressure water nozzles (3000 psi) and collection, removal, transportation and disposal of sand, debris, and liquid wastes to legal disposal sites.

B. Select and use closed-circuit television equipment that will produce color video DVD. Use camera with accurate footage counter which displays on monitor exact distance of camera from starting manhole. Use camera with camera height adjustment so that camera lens is always centered at one-half inside diameter, or higher, in pipe being televised. Provide lighting system that allows features and condition of pipe to be clearly seen. Reflector in front of camera may be necessary to enhance lighting in dark or large diameter pipe.

C. Perform television inspection of gravity sanitary sewers as follows:
   1. Videos shall pan beginning and ending manholes to demonstrate that debris has been removed. Camera operator shall slowly pan each service connection and where sewer transitions from one pipe material to another.
   2. Video DVD shall be continuous for pipe segments between manholes. Do not leave gaps in video taping of segment between manholes and do not show single segment on more than one video DVD.
   3. No flow is allowed in gravity sanitary sewer while performing post-installation television inspection.

D. Provide video recorded DVD. For each DVD provide completed TV Inspection Report, as attached at end of this section. TV Inspection Report is written/narrated log of pipe conditions and service connections, indexed to footage counter.

F. Upon completion of video tape reviews by Project Manager, Contractor will be notified regarding final acceptance of sewer segment.

END OF SECTION 33 30 00

SECTION 33 31 14 – ACCEPTANCE TESTING FOR SANITARY SEWERS

PART 1 - GENERAL

1.1 SUMMARY

A. This section includes the following:

1. Acceptance testing of sanitary sewers including:

   i. Visual inspection of sewer pipes

   ii. Mandrel testing for flexible sewer pipes.

   iii. Leakage testing of sewer pipes.

   iv. Leakage testing of manholes.

   v. Smoke testing of point repairs.

2. All tests listed in this Section are not necessarily required on this Project. Required tests are named in other Sections which refer to this Section for testing criteria and procedures.

1.2 SUBMITTALS

A. Test Plan: Before testing begins and in adequate time to obtain approval through submittal process, prepare and submit test plan for approval by Engineer. Include testing procedures, methods, equipment, and tentative schedule. Obtain advance written approval for deviations from Drawings and Specifications.

B. Test Reports: Submit test reports for each test on each segment of sanitary sewer

1.3 MEASUREMENT AND PAYMENT

A. Stipulated Price (Lump Sum). If Contract is Stipulated Price Contract, payment for work in this Section is included in total Stipulated Price.

1.4 REFERENCES

A. ASTM C 828 - Standard Test Method for Low Pressure Air Test of Vitrified Clay Pipe Lines.

B. ASTM C 924 - Standard Practice for Testing Concrete Pipe Sewer Lines by Low-Pressure Air Test Method.

C. ASTM D 3034 - Standard Specification for Type PSM Polyethylene (Vinyl Chloride) (PVC) Sewer Pipe and Fittings.

D. ASTM F 794 - Specification for Poly (Vinyl Chloride) (PVC) Profile Gravity Sewer Pipe and Fittings Based on Controlled Inside Diameter.

E. ASTM F 1417 - Standard Test Method for Installation Acceptance of Plastic Gravity Sewer Lines Using Low Pressure Air.

1.5 PERFORMANCE REQUIREMENTS

A. Gravity flow sanitary sewers are required to have straight alignment and uniform grade between manholes.

B. Flexible pipe, including "semi-rigid" pipe, is required to show no more than 5 percent deflection. Test pipe no sooner than 30 days after backfilling of line segment but prior to final acceptance using standard mandrel to verify that installed pipe is within specified deflection tolerances.

C. Maximum allowable leakage for Infiltration or Exfiltration

1. The total exfiltration, as determined by hydrostatic head test, shall not exceed 50 gallons per inch diameter per mile of pipe per 24 hours at minimum test head of 2 feet above crown of pipe at upstream manhole or 2 feet above groundwater elevation, whichever is greater.

2. When pipes are installed more than 2 feet below groundwater level, use infiltration test in lieu of exfiltration test. Total infiltration shall not exceed 50 gallons per inch diameter per mile of pipe per 24 hours. Groundwater elevation must be at least 2 feet above crown of pipe at upstream manhole.

3. Refer to Table 33 31 14-1, Water Test Allowable Leakage, at end of Section, for measuring leakage in sewers. Perform leakage testing to verify that leakage criteria are met.

D. Perform air testing in accordance with requirements of this Section and Texas Natural Resources Conservation Commission requirements. Refer to Table 33 31 14-2, Time Allowed for Pressure Loss from 3.5 psig to 2.5 psig, Table 33 31 14-3, Minimum Testing Times for Low Pressure Air Test, and Table 33 31 14-4, Vacuum Test Time Table, at end of this Section.

1.6 GRAVITY SANITARY SEWER QUALITY ASSURANCE

A. Repair, correct, and retest manholes or sections of pipe which fail to meet specified requirements when tested.

B. Provide testing reports and video tape of television inspection as directed by Engineer.

C. Upon completion of tape reviews by Engineer, Contractor will be notified regarding final acceptance of sewer segment.

1.7 SEQUENCING AND SCHEDULING

A. Perform testing as work progresses. Schedule testing so that no more than 1000 linear feet of installed sewer remains untested at one time.

B. Coordinate testing schedules with Engineer. Perform testing under observation of Engineer.

PART 2 - PRODUCTS

2.1 DEFLECTION MANDREL

A. Mandrel Sizing. Rigid mandrel shall have outside diameter (O.D.) equal to 95 percent of inside diameter (I.D.) of pipe. Inside diameter of pipe, for purpose of determining outside diameter of mandrel, shall be average outside diameter minus two minimum wall thicknesses for O.D. controlled pipe and average inside diameter for I.D. controlled pipe, dimensions shall be per appropriate standard. Statistical or other "tolerance packages" shall not be considered in mandrel sizing.

B. Mandrel Design. Rigid mandrel shall be constructed of metal or rigid plastic material that can withstand 200 psi without being deformed. Mandrel shall have nine or more "runners" or "legs" as long as total number of legs is odd number. Barrel section of mandrel shall have length of at least 75 percent of inside diameter of pipe. Rigid mandrel shall not have adjustable or collapsible legs which would allow reduction in mandrel diameter during testing. Provide and use proving ring for modifying each size mandrel.

C. Proving Ring. Furnish "proving ring" with each mandrel. Fabricate ring of 1/2-inch-thick, 3-inch-wide bar steel to diameter 0.02 inches larger than approved mandrel diameter.

D. Mandrel Dimensions (5 percent allowance). Average inside diameter and minimum mandrel diameter are specified in Table 33 31 14-5, Pipe vs. Mandrel Diameter, at end of this Section. Mandrels for higher strength, thicker wall pipe or other pipe not listed in table may be used when approved by Engineer.

2.2 EXFILTRATION TEST

A. Water Meter: Obtain transient water meter from City for use when water for testing will be taken from City system. Conform to City requirements for water meter use.

B. Test Equipment:

1. Pipe plugs.

2. Pipe risers where manhole cone is less than 2 feet above highest point in pipe or service lead.

2.3 INFILTRATION TEST

A. Test Equipment:

1. Calibrated 90 degree V-notch weir.

2. Pipe plugs.

2.4 LOW PRESSURE AIR TEST

A. Minimum Requirement for Equipment:

1. Control panel

2. Low-pressure air supply connected to control panel.

3. Pneumatic plugs: Acceptable size for diameter of pipe to be tested; capable of withstanding internal test pressure without leaking or requiring external bracing.

4. Air hoses from control panel to:

a. Air supply.

b. Pneumatic plugs.
c. Sealed line for pressuring.

d. Sealed line for monitoring internal pressure.

B. Testing Pneumatic Plugs: Place pneumatic plug in each end of length of pipe on ground. Pressurize plugs to 25 psig; then pressurize sealed pipe to 5 psig. Plugs are acceptable when they remain in place against test pressure without external aids.

2.5 GROUND WATER DETERMINATION

A. Equipment: Pipe probe or small diameter casing for ground water elevation determination.

2.6 SMOKE TESTING

A. Equipment:

1. Pneumatic plugs.

2. Smoke generator as supplied by Superior Signal Company, or approved equal.

3. Blowers producing 2500 scfm minimum.

PART 3 - EXECUTION

3.1 PREPARATION

A. Provide labor, equipment, tools, test plugs, risers, air compressor, air hose, pressure meters, pipe probe, calibrated weirs, or any other device necessary for proper testing and inspection.

B. Determine selection of test methods and pressures for gravity sanitary sewers based on ground water elevation. Determine ground water elevation using equipments.

3.2 VISUAL INSPECTION OF GRAVITY SANITARY SEWERS

A. Check pipe alignment visually by flashing light between structures. Verify if alignment is true and no pipes are misplaced. In case of misalignment or damaged pipe, remove and re-lay or replace pipe segment.

3.3 MANDREL TESTING FOR GRAVITY SANITARY SEWERS

A. Perform deflection testing on flexible and semi-rigid pipe to confirm pipe has no more than 5 percent deflection. Mandrel testing shall conform to ASTM D 3034. Perform testing no sooner than 30 days after backfilling of line segment, but prior to final acceptance testing of line segment.

B. Pull approved mandrel by hand through sewer sections. Replace any section of sewer not passing mandrel. Mandrel testing is not required for stubs.

C. Retest repaired or replaced sewer sections.

3.4 LEAKAGE TESTING FOR GRAVITY SANITARY SEWERS

A. Test Options:

1. Test gravity sanitary sewer pipes for leakage by either exfiltration or infiltration methods, as appropriate, or with low pressure air testing.

2. Test new or rehabilitated sanitary sewer manholes with water or low pressure air. Manholes tested with low pressure air shall undergo physical inspection prior to testing.

3. Perform leakage testing after backfilling of line segment, and prior to tie-in of service connections.

4. If no installed piezometer is within 500 feet of sewer segment, provide temporary piezometer for this purpose.

B. Compensating for Ground Water Pressure:

1. Where ground water exists, install pipe nipple at same time sewer line is placed. Use 1/2-inch capped pipe nipple approximately 10 inches long. Make installation through manhole wall on top of sewer line where line enters manhole.

2. Immediately before performing line acceptance test, remove cap, clear pipe nipple with air pressure, and connect clear plastic tube to nipple. Support tube vertically and allow water to rise in tube. After water stops rising, measure height in feet of water over invert of pipe. Divide this height by 2.3 feet/psi to determine ground water pressure to be used in line testing.

C. Exfiltration test:

1. Determine ground water elevation.

2. Plug sewer in downstream manhole.

3. Plug incoming pipes in upstream manhole.

4. Install riser pipe in outgoing pipe of upstream manhole when highest point in service lead (house service) is less than 2 feet below bottom of manhole cone.

5. Fill sewer pipe and manhole or pipe riser, when used, with water to point 2-1/2 feet above highest point in sewer pipe, house lead, or ground water table, whichever is highest.

6. Allow water to stabilize for one to two hours. Take water level reading to determine drop of water surface, in inches, over one-hour period, and calculate water loss (1 inch of water in 4 feet diameter manhole equals 8.22 gallons) or measure quantity of water required to keep water at same level. Loss shall not exceed that calculated from allowable leakage according to Table 33 31 14-1 at end of this Section.

D. Infiltration test: Ground water elevation must be not less than 2.0 feet above highest point of sewer pipe or service lead (house service).

1. Determine ground water elevation.

2. Plug incoming pipes in upstream manhole.

3. Insert calibrated 90 degree V-notch weir in pipe on downstream manhole.

4. Allow water to rise and flow over weir until it stabilizes.

5. Take five readings of accumulated volume over period of 2 hours and use average for infiltration. Average must not exceed that calculated for 2 hours from allowable leakage according to Table 33 31 14-1 at end of this Section.

E. Low Air Pressure Test: When using this test conform to ASTM C 828, ASTM C 924, or ASTM F 1417, as applicable, with holding time not less than that listed in Table 33 31 14-2.

1. Air testing for sections of pipe shall be limited to lines less than 36-inch average inside diameter.

2. Lines 36-inch average inside diameter and larger shall be tested at each joint. Minimum time allowable for pressure to drop from 3.5 pounds per square inch gauge to 2.5 pounds per square inch during joint test shall be 10 seconds, regardless of pipe size.

3. For pipe sections less than 36-inch average inside diameter:

   a. Determine ground water level.
   b. Plug both ends of pipe. For concrete pipe, flood pipe and allow 2 hours to saturate concrete. Then drain and plug concrete pipe.

   c. After manhole-to-manhole section of sanitary sewer main has been sliplined and prior to any service lines being connected to new liner, plug liner at each manhole with pneumatic plugs.

   d. Pressurize pipe to 4.0 psig. Increase pressure 1.0 psi for each 2.3 feet of ground water over highest point in system. Allow pressure to stabilize for 2 to 4 minutes. Adjust pressure to start at 3.5 psig (plus adjustment for ground water table). See Table 33 31 14-2 at end of this Section.

   e. To determine air loss, measure time interval for pressure to drop to 2.5 psig. Time must exceed that listed in Table 33 31 14-2 at end of this Section for pipe diameter and length. For sliplining, use diameter of carrier pipe.

F. Retest: Repair and retest any section of pipe which fails to meet requirements.

3.5 TEST CRITERIA TABLES

A. Exfiltration and Infiltration Water Tests: Refer to Table 33 31 14-1, Water Test Allowable Leakage, at end of this Section.

B. Low Pressure Air Test:

1. Times in Table 33 31 14-2, Time Allowed For Pressure Loss From 3.5 psig to 2.5 psig, at end of this Section, are based on equation from Texas Natural Resources and Conservation Commission (TNRCC) Design Criteria 317.2(a)(4)(B).

	T = 0.0850(D)(K)/(Q)
where:	T=time for pressure to drop 1.0 pounds per square inch gauge in seconds
	K=0.000419 DL, but not less than 1.0
	D=average inside diameter in inches

	L=length of line of same pipe size in feet
	L=rate of loss, 0.0015 ft^3/min./sq. ft. internal surface

2. Since K value of less than 1.0 shall not be used, there are minimum testing times for each pipe diameter as given in Table 33 31 14-3, Minimum Testing Times for Low Pressure Air Test.

Notes:
1. When two sizes of pipe are involved, compute time by ratio of lengths involved.
2. Lines with 27-inch average inside diameter and larger may be air tested at each joint.
3. Lines with average inside diameter greater than 36 inches must be air tested for leakage at each joint.
4. If joint test is used, perform visual inspection of joint immediately after testing.
3. For joint test, pipe is to be pressurized to 3.5 psi greater than pressure exerted by groundwater above pipe. Once pressure has stabilized, minimum times allowable for pressure to drop from 3.5 pounds per square inch gauge to 2.5 pounds per square inch gauge shall be 10 seconds.

3.6 LEAKAGE TESTING FOR MANHOLES

A. After completion of manhole construction, wall sealing, or rehabilitation, but prior to backfilling, test manholes for water tightness using hydrostatic or vacuum testing procedures.

B. Plug influent and effluent lines, including service lines, with suitably-sized pneumatic or mechanical plugs. Ensure plugs are properly rated for pressures required for test; follow manufacturer's safety and installation recommendations. Place plugs minimum of 6 inches outside of manhole walls. Brace inverts to prevent lines from being dislodged when lines entering manhole have not been backfilled.

C. Vacuum testing:

1. Install vacuum tester head assembly at top access point of manhole and adjust for proper seal on straight top section of manhole structure. Following manufacturer's instructions and safety precautions, inflate sealing element to recommended maximum inflation pressure; do not over-inflate.
2. Evacuate manhole with vacuum pump to 10 inches mercury (Hg), disconnect pump, and monitor vacuum for time period specified in Table 33 31 14-4, Vacuum Test Time Table.
3. If drop in vacuum exceeds 1 inch Hg over specified time period tabulated above, locate leaks, complete repairs necessary to seal manhole and repeat test procedure until satisfactory results are obtained.

D. Perform hydrostatic exfiltration testing as follows:

1. Seal wastewater lines coming into manhole with internal pipe plug. Then fill manhole with water and maintain it full for at least one hour.

2. The maximum leakage for hydrostatic testing shall be 0.025 gallons per foot diameter per foot of manhole depth per hour.

3. If water loss exceeds amount tabulated above, locate leaks, complete repairs necessary to seal manhole and repeat test procedure until satisfactory results are obtained.

3.7 SMOKE TEST PROCEDURE FOR POINT REPAIRS

A. Application: Perform smoke test to:

1. Locate points of line failure for point repair.

2. Determine when point repairs are properly made.

3. Determine when service connections have been reconnected to rehabilitated sewer.

4. Check integrity of connections to newly replaced service taps to liners and to existing private service connections.

B. Limitations: Do not backfill service taps until completion of this test. Test only those taps in single manhole section at one time. Keep number of open excavations to minimum.

C. Preparation: Prior to smoke testing, give written notices to area residents no fewer than 2 days, nor more than 7 days, prior to proposed testing. Also give notice to City of Houston Police and Fire Departments 24 hours prior to actual smoke testing.

D. Isolate Section: Isolate manhole section to be tested from adjacent manhole sections to keep smoke localized. Temporarily seal annular space at manhole for sliplined sections.

E. Smoke Introduction:

1. Operate equipment according to manufacturer's recommendation and as approved by Engineer.

2. Conduct test by forcing smoke from smoke generators through sanitary sewer main and service connections. Operate smoke generators for minimum of 5 minutes.

3. Introduce smoke into upstream and downstream manhole as appropriate. Monitor tap/connection for smoke leaks. Note sources of leaks.

F. Repair and Retest: Repair and replace taps or connections noted as leaking and then retest. Taps and connections may be left exposed in only one manhole section at time. When repair or replacement, testing or retesting, and backfilling of excavation is not

completed within one work day, properly barricade and cover each excavation as approved by Engineer.

G. Service Connections: On houses where smoke does not issue from plumbing vent stacks to confirm reconnection of sewer service to newly installed liner pipe, perform dye test to confirm reconnection. Introduce dye into service line through plumbing fixture inside structure or sewer cleanout immediately outside structure and flush with water. Observe flow at service reconnection or downstream manhole. Detection of dye confirms reconnection.

Table 33 31 14-1
WATER TEST ALLOWABLE LEAKAGE

DIAMETER OF RISER OR STACK IN INCHES	VOLUME PER INCH OF DEPTH		ALLOWANCE LEAKAGE*	
	INCH	GALLONS	PIPE SIZE IN INCHES	GALLONS/MINUTE PER 100 FT.
1	0.7854	.0034	6	0.0039
2	3.1416	.0136	8	0.0053
2.5	4.9087	.0212		
3	7.0686	.0306		
4	12.5664	.0306		
5	19.6350	.0544		
6	28.2743	.1224		
8	50.2655	.2176		
For other diameters, multiply square of diameters by value for 1" diameter.			Equivalent to 50 gallons per inch of inside diameter per mile per 24 hours.	

- Allowable leakage rate shall be reduced to 10 gallons per inch of inside diameter per mile per 24 hours, when sewer is identified as located within 25-year flood plain.

Table 33 31 14-2
ACCEPTANCE TESTING FOR SANITARY SEWERS

TIME ALLOWED FOR PRESSURE LOSS FROM 3.5 PSIG TO 2.5 PSIG														
Pipe Diam. (in)	Min. Time (min:sec)	Length for Min. Tim	Time for Longer Lengt	Specification Time for Length (L) Shown (min:sec)										
				100	150	200	250 ft	300 ft	350 ft	400 ft	450 ft	500 ft	550 ft	600 ft

		e (ft)	h (sec)	ft	ft	ft								
6 8	5:40 7:33	398	0.854 8	5:40 7:33	5:40 7:33	5:40 7:33	5:40 7:33	5:40 7:36	5:40 8:52	5:42 10:08	6:25 11:24	7:07 12:40	7:50 13:56	8:33 15:12

Table 33 31 14-3
MINIMUM TESTING TIMES FOR LOW PRESSURE AIR TEST

PIPE DIAMETER *(INCHES)*	MINIMUM TIME *(SECONDS)*	LENGTH FOR MINIMUM TIME *(FEET)*	TIME FOR LONGER LENGTH *(SECONDS)*
6 8	340 454	398 298	0.855 (L) 1.520 (L)

Table 33 31 14-4
VACUUM TEST TIME TABLE

DEPTH IN FEET	ME IN SECONDS BY PIPE DIAMETER		
	48"	60"	72"
4	10	13	16
8	20	26	32
(The values listed above have been extrapolated from ASTM C 924-85)			

Table 33 31 14-5
PIPE VS. MANDREL DIAMETER

Material and Wall Construction	Size	Nominal I.D. (Inches)	AverageMinimum Diameter (Inches)	Mandrel (Inches)
PVC-Solid (SDR 26)	6	6	5.764	5.476
		8	7.715	7.329
		10	9.646	9.162
PVC-Solid (SDR 35)	12	12	11.737	11.150
		15	14.374	13.655

		18	17.629	16.748
		21	20.783	19.744
		24	23.381	22.120
		27	26.351	25.033
PVC-Truss		8	7.750	7.363
		10	9.750	9.263
		12	11.790	11.201
		15	14.770	14.032
PVC-Profile (ASTM F 794)		12	11.740	11.153
		15	14.370	13.652
		18	17.650	16.768
		21	20.750	19.713
		24	23.500	22.325
		27	26.500	25.175
		30	29.500	28.025
		36	35.500	33.725
		42	41.500	39.425
		48	47.500	45.125
HDPE-Profile	18	18.000	17.100	
		21	21.000	19.950
		24	24.000	22.800
		27	27.000	25.650
		30	30.000	28.500
		36	36.000	34.200
		42	42.000	39.900
		48	48.000	45.600
		54	54.000	51.300
		60	60.000	57.000
Fiberglass		12	12.85	11.822
(Class SN 46)		18	18.66	17.727
		20	20.68	19.646
		24	24.72	23.484
		30	30.68	29.146
		36	36.74	34.903
		42	42.70	40.565
		48	48.76	46.322
		54	54.82	52.079
		60	60.38	57.361

END OF SECTION 33 31 14

SECTION 33 40 00 – STORM SEWERS

PART 1 - GENERAL

1.1 SUMMARY

A. This section includes the following:

1. New storm sewers and appurtenances.

1.2 SUBMITTALS

A. Submit manufacturer's literature for product specifications and installation instructions.

B. Submit proposed methods, equipment, materials, and sequence of operations for sewer construction. Plan operations to minimize disruption of utilities to occupied facilities or adjacent property.

1.3 MEASUREMENT AND PAYMENT

A. Stipulated Price (Lump Sum). If Contract is Stipulated Price Contract, payment for Work in this Section is included in total Stipulated Price.

1.4 PRODUCT DELIVERY, STORAGE, AND HANDLING

A. Comply with manufacturer's recommendations.

B. Handle pipe, fittings, and accessories carefully with approved handling devices. Do not drop or roll pipe off trucks or trailers. Do not use Materials cracked, gouged, chipped, dented, or otherwise damaged shall not be use materials for installation.

C. Store pipe and fittings on heavy timbers or platforms to avoid contact with ground.

D. Unload pipe, fittings, and appurtenances as close as practical to location of installation to avoid unnecessary handling.

E. Keep interiors of pipe and fittings free of dirt and foreign matter.

F. Store PVC pipe out of direct sunlight.

PART 2 - PART 2 P R O D U C T S

2.1 PIPE

A. Provide piping materials for storm sewers shall be of sizes and types specified unless otherwise indicated on Drawings.

B. In diameters where material alternatives are available, provide pipe from single manufacturer for each pipe diameter, unless otherwise approved by Engineer or otherwise shown on Drawings.

C. Existing pipe that has been removed during construction cannot be reused.

2.2 PIPE MATERIAL SCHEDULE

A. Storm Sewer Pipe: Section 33 12 00 – Polyvinyl Chloride Pipe or Section 33 41 01 – High Density Polyethylene Pipe and Section 33 41 00 – Reinforced Concrete Pipe

B. Provide pipe meeting minimum class, dimension ratio, or other criteria indicated.

C. Pipe materials other than those listed above shall not be used for storm sewers.

2.3 BEDDING, BACKFILL, AND TOPSOIL MATERIAL

A. Topsoil: Conform to requirements of Section 32 91 19.13 – Topsoil.

B. Use cement stabilized sand material for bedding and backfill in the pipe zone for all storm sewers per Section 31 23 01 – Cement Stabilized Sand.

PART 3 - PART 3 E X E C U T I O N

3.1EXCAVATION

A. Line and Grade. Establish required uniform line and grade trench from benchmarks identified by Engineer. Maintain this control for minimum of 100 feet behind and ahead of pipe-laying operation. Use laser beam equipment to establish and maintain proper line and grade of Work. Or use of appropriately sized grade boards which are substantially supported.

B. Trench Excavation. Excavate pipe trenches to level as indicated on Standard Details. Backfill excavation with specified bedding material to level of lower one-third of pipe barrel. Tamp and compact backfill to provide bedding at indicated grade. Form bedding foundation to minimum depth of one-eighth of pipe diameter, but not less than 6 inches.

3.2PIPE INSTALLATION

G. Install in accordance with pipe manufacturer's recommendations and as specified in this section.

H. Install pipe only after excavation is completed, bottom of trench is shaped, bedding material is installed, and trench has been approved by Project Manager.

I. Install pipe to line and grade indicated on Drawings. Place pipe so that it has continuous bearing of barrel on bedding material with no voids, and is laid in trench so interior surfaces of pipe follows grades and alignments indicated.

J. Install pipe with bells of pipe facing upstream of anticipated flow.

K. Form concentric joint with each section of adjoining pipe to prevent offsets.

L. Place and drive home newly laid sections with a sling or come-a-long winches to eliminate damage to sections. Unless otherwise approved by Project Manager, provide end protection to prevent damage while using backhoes or similar powered equipment to drive home newly laid sections.

M. Keep interior of pipe clean as installation progresses.

N. Keep excavations free of water during construction and until final inspection.

O. When work is not in progress, cover exposed ends of pipes with pipe plug specifically designed to prevent foreign material from entering pipe.

P. For PVC and Polyethylene Pipe:
   1. Provide a minimum cover from top of pavement to top of pipe, but no less than 2 feet.
   2. Accomplish transitions to different material of pipe in a manhole or inlet box. No adapter, coupling for dissimilar pipe, or saddle connections allowed.
   3. Provide pipe sections in standard lengths with minimum length of 13 feet. Pipe may be field modified to shorten length no less than 4 feet, unless otherwise approved by Engineer. Field modify pipe per manufacturer's recommendations.
   4. Provide gasketed bell and spigot joints installed per manufacturer's recommendations. Gasketed pipe joints; clean and free of debris, show no leakage after installation.

3.3INSTALLATION OF APPURTENANCES

A. Install PVC pipe culverts with approved end treatments. Approved end treatments include concrete headwalls, wingwalls and collars.

B. Install inlets, headwalls, and wingwalls to conform to requirements of Section 33 41 13 - Precast Concrete Inlets.

3.6 INSPECTION AND TESTING

A. Perform post installation television inspection in accordance with Section 33 30 00 - Gravity Sanitary Sewers. Hand held cameras may be used in storm sewers in lieu of requirements of Paragraph 3.09 of Section 33 30 00 – Gravity Sanitary Sewers. Clearly stencil distance markings on each joint of pipe to indicate distance from starting manhole when using hand held cameras.

3.7BACKFILL AND SITE CLEANUP

A. Backfill trench after pipe installation is inspected and approved by Project Manager.

B. Repair and replace removed or damaged pavement and sidewalks.

C. In unpaved areas, grade surface as uniform slope to natural grade as indicated on Drawings. Provide minimum of 4 inches of topsoil and seed according to requirements of Sodding, as required.

END OF SECTION 33 40 00

SECTION 33 41 00 – REINFORCED CONCRETE PIPE

PART 1 G E N E R A L

1.1 SUMMARY

A. This section includes the following:

1. Reinforced concrete pipe for sanitary sewers and storm sewers.

1.2 SUBMITTALS

A. Submit complete product data for pipe, fittings and gaskets for approval. Indicate conformance to appropriate reference standards.

B. Submit manufacturer's certificate that concrete pipes meet applicable standards.

1.3 MEASUREMENT AND PAYMENT

A. Stipulated Price (Lump Sum). If Contract is Stipulated Price Contract, payment for Work in this section is included in total Stipulated Price.

1.4 REFERENCES

A. ASTM C 76 - Standard Specification for Reinforced Concrete Culvert, Storm Drain, and Sewer Pipe.

B. ASTM C 443 - Standard Specification for Joints for Circular Concrete Sewer and Culvert Pipe Using Rubber Gaskets.

C. ASTM C 497 - Standard Test Method for Concrete Pipe, Manhole Sections, or Tile.

D. ASTM C 506 - Standard Specification for Reinforced Concrete Arch Culvert, Storm Drain and Sewer Pipe

E. ASTM C 655 - Standard Specification for Reinforced Concrete D-load Culvert, Storm Drain and Sewer Pipe.

F. ASTM C 877 - Standard Specification for External Sealing Bands for Noncircular Concrete Sewer, Storm Drain, and Culvert Pipe.

PART 2 P R O D U C T S

2.1 REINFORCED CONCRETE PIPE

A. Conform circular reinforced concrete pipe to requirements of ASTM C 76, for Class III wall “B” thickness. Conform to rubber gasket joints for sanitary sewers and storm sewers and tongue and groove for roadside ditch culverts to ASTM C 443.

B. Conform reinforced concrete arch pipe to requirements of ASTM C 506 for Class A-III. Joints shall conform to ASTM C 877.

C. Reinforced concrete elliptical pipe, either vertical or horizontal, shall conform to requirements of ASTM C 507 for Class VE-III for vertical or Class HE-III for horizontal. Use rubber gasket joints conforming to ASTM C 877.

D. Conform reinforced concrete D-load pipe requirements of ASTM C 655.

2.2 GASKETS

A. Furnish rubber gasket conforming to ASTM C 443 for circular reinforced concrete pipe and rubber gasket conforming to ASTM C 877 for reinforced concrete elliptical pipe.

PART 3 E X E C U T I O N

3.1 INSTALLATION

A. Conform to requirements of following Sections, as applicable:

2. Section 33 30 00 – Gravity Sanitary Sewers.

3. Section 33 40 00 – Storm Sewers.

B. Install reinforced concrete pipe in accordance with manufacturer's recommendations.

END OF SECTION 33 41 00

SECTION 33 41 01 – HIGH DENSITY POLYETHYLENE PIPE (HDPE)

PART 1 - GENERAL

1.1 SECTION INCLUDES

A. This section includes the following:

1. High density polyethylene (HDPE) pipe for gravity sewers and drains, including fittings.
2. High density polyethylene (HDPE) pipe for storm sewers culverts.

1.2 SUBMITTALS

A. Submit shop drawings showing design of pipe and fittings, laying dimensions, fabrication, fittings, flanges, and special details.

1.3 MEASUREMENT AND PAYMENT

A. Stipulated Price (Lump Sum). If Contract is Stipulated Price Contract, payment for work in this Section is included in total Stipulated Price.

1.4 REFERENCES

A. AASHTO M 294 - Standard Specification for Corrugated Polyethylene Drainage Pipe, 18"- 48" diameter.

B. AASHTO Section 18 - Soil Thermoplastic Pipe Interaction Systems.

C. AASHTO Section 30 - Standard Practice for Underground Installation of Thermoplastic Pipe for Sewer and Other Gravity Flow Applications.

D. ASTM D 2321 - Standard Recommended Practice for Underground Installation of Flexible Thermoplastic Pipe.

E. ASTM D 2657 - Standard Practice for Heat Fusion Joining Polyolefin Pipe and Fittings.

F. ASTM D 2837 - Standard Test Method for Obtaining Hydrostatic Design Basis for Thermoplastic Pipe Materials.

G. ASTM D 3035 - Standard Specification for Polyethylene (PE) Plastic Pipe (DR-PR) Based on Controlled Outside Diameter.

H. ASTM D 3212 - Standard Specification for Joints for Drain and Sewer Plastic Pipes Using Flexible Elastomeric Seals.

I. ASTM D 3350 - Standard Specification for Polyethylene Plastics Pipe and Fittings Materials.

J. ASTM F 477 - Standard Specification for Elastomeric Seals (Gaskets) for Joining Plastic Pipe.

K. ASTM F 714 - Standard Specification for Polyethylene Plastic (PE) Pipe (SDR-PR) Based on Outside Diameter.

L. ASTM F 894 - Standard Specification for Polyethylene (PE) Large-Diameter Profile Wall Sewer and Drain Pipe.

1.5 QUALITY CONTROL

A. Provide manufacturer's certificate of conformance to Specifications.

B. Furnish pipe and fittings that are homogeneous throughout and free from visible cracks, holes, foreign inclusions, or other injurious defects. Provide pipe as uniform as commercially practical in color, opacity, density, and other physical properties.

1.6 QUALIFICATIONS

A. Manufacturer: Company specializing in manufacturing the products specified in this section with documented experience of minimum 5 years of pipe installations that have been in successful, continuous service for same type of service as proposed Work.

PART 2 - PRODUCTS

2.1 GENERAL

A. For storm sewer drainage pipes provide HDPE as follows:

1. N-12 and N-12 HC by Advanced Drainage Systems, Inc. (ADS).

2. Sure-Lok F477 by Hancor, Inc.

B. Furnish profile-wall gravity sewer pipe with water tight joint in accordance with manufacturer's recommendations. Elastomeric Seals (Gaskets) for all joints required.

C. Furnish corrugated polyethylene pipe (CPP) for gravity storm sewer pipe. Joints shall be installed such that connection of pipe sections will form continuous line free from irregularities in flow line. Suitable joints are:

1. Integral Bell and Spigot. Bell shall overlap minimum of two corrugations of spigot end when fully engaged.

2. Exterior Bell and Spigot. Bell shall be fully welded to exterior of pipe and overlap spigot end so that flow lines and ends match when fully engaged.

D. Pipe and Fittings: High density, high molecular weight polyethylene HDPE virgin compound material meeting requirements of cell class outlined in AASHTO M 294, AASHTO MP7 and ASTM D 3350.

E. Types: CPP shall meet one or both of following:

1. Type S: Outer corrugated wall with smooth inner liner.

2. Type D: Inner and outer smooth walls braced circumferentially or spirally with projections or ribs.

F. Lubricant: Use lubricant for assembly of gasketed joints, which has no detrimental effect on gasket or on pipe, in accordance with manufacturer's recommendations.

2.2 TEST METHODS FOR STORM SEWER PIPES

A. Pipe stiffness at 5 percent deflection, when determined in accordance with ASTM D 2412, shall be as specified in Section 7.4 of AASHTO M 294.

B. Minimum inner wall thickness shall be as specified in Section 7.2.2 of AASHTO M 294.

2.3 MARKING

A. Mark each standard and random length of pipe in compliance with these Specifications with following information:

1. Pipe size.

2. Pipe class.

3. Production code.

4. Material designation.

PART 3 - EXECUTION

3.1 INSTALLATION

A. Install flexible pipe, including "semi-rigid" pipe, to conform to standard practice described in ASTM D 2321, and as described in this Section. Where an apparent conflict occurs between standard practice and requirements of this Section, this Section governs.

B. Install pipe in accordance with the manufacturers recommended installation procedures.

C. Use Cement Stabilized Sand for backfilling and bedding, Section 31 23 01 – Cement Stabilized Sand.

END OF SECTION 33 41 01

SECTION 33 44 13 – PRECAST CONCRETE INLETS

PART 1 - GENERAL

1.1 SUMMARY

A. This section includes the following:

1. Precast concrete inlets for storm sewer including cast iron frame and plate or grate.
2. Precast junction box with lid or grate top.

1.2 SUBMITTALS

A. Submit shop drawings for approval of design and construction details for precast concrete inlets. Precast units differing from standard designs shown on Drawings will be rejected unless shop drawing submittals are approved. Clearly show proposed substitution is equal or superior in every aspect to standard designs. Submit manufacturers' data and details for frames, grates, rings, and covers.

1.3 MEASUREMENT AND PAYMENT

A. Stipulated Price (Lump Sum). If Contract is Stipulated Price Contract, payment for work in this Section is included in total Stipulated Price.

1.4 REFERENCES

A. ASTM C 76 - Standard Specification for Reinforced Concrete Culvert, Storm Drain, and Sewer Pipe.

B. ASTM A 48 - Standard Specification for Gray Iron Castings

C. ASTM C 270 - Standard Specification for Mortar for Unit Masonry.

1.5 STORAGE AND SHIPMENT

A. Store precast units on level blocking. Do not place loads until design strength is reached. Shipment of acceptable units may be made when 28-day strength requirements have been met.

PART 2 - PRODUCTS

2.1 MATERIALS

A. Concrete: Provide concrete for precast machine-made units meeting requirements of ASTM C 76 regarding reinforced concrete, cement, aggregate, mixture, and concrete test. Minimum 28-day compressive strength shall be 4000 psi.

B. Reinforcing Steel: Place reinforcing steel to conform to details shown on Drawings and as follows:

1. Provide positive means for holding steel cages in place throughout production of concrete

units. Maximum variation in reinforcement position is plus or minus 10 percent of wall thickness or plus or minus 1/2 inch, whichever is less. Regardless of variation, maintain minimum cover of concrete over reinforcement as shown on Drawings.

2. Welding of reinforcing steel is not permitted unless noted on Drawings.

C. Mortar for Load Bearing Walls and Partitions: ASTM C 270, Type S utilizing Property Method to achieve 1800 psi strength.

D. Mortar for Non-load Bearing Walls and Partitions: ASTM C 270, Type S utilizing the Property Method to achieve 1800 psi strength.

E. Mortar for Masonry below Grade or in Contact with Earth: ASTM C 270, Type M utilizing the Property Method to achieve 2500 psi strength.

F. Pointing Mortar: ASTM C 270, Type N, using the Property Method to achieve 750 psi strength.-Mortar.

2.2 CASTINGS

A. Use castings for frames, grates, rings and covers conforming to ASTM A 48, Class 35B. Provide locking covers if indicated on Drawings.

B. Use clean castings capable of withstanding application of AASHTO M306- 40,000 pound proof loading without detrimental permanent deformation.

C. Fabricate castings to conform to shapes, dimensions, and with wording or logos shown on Drawings. Standard dimensions for manhole covers are 32 inches in diameter.

D. Use clean castings, free from blowholes and other surface imperfections. Use clean and symmetrical cast holes in covers, free of plugs.

2.3 2.3 BEARING SURFACES

A. Machine bearing surfaces between covers or grates and their respective frames so that even bearing is provided for position in which casting may be seated in frame.

PART 3 - EXECUTION

3.1 EXAMINATION

A. Verify lines and grades are correct.

B. Verify compacted subgrade will support loads imposed by inlets.

3.2 INSTALLATION

A. Install castings according to approved shop drawings, instructions in related specifications, and applicable directions from manufacturer's printed materials

B. Install units complete in place to dimensions, lines, and grades as shown on Drawings.

C. Excavate in accordance with requirements of Section 31 23 16.13 – Excavation and Backfill for Utilities.

D. Bed precast concrete units on foundations of firm, stable material shaped to conform to shape of unit bases.

E. Provide adequate means to lift and place concrete units.

3.3 FINISHES

A. Use hydraulic cement to seal joints, fill lifting holes and as otherwise required.

B. When box section of inlet has been completed, shape floor of inlet with mortar to conform to Drawing details.

C. Adjust cast iron inlet plate frames to line, grade, and slope shown on Drawings. Grout frame in place with mortar.

3.4 INLET WATERTIGHTNESS

A. Verify that inlets are free of leaks. Repair leaks in approved manner.

3.5 CONNECTIONS

A. Connect storm sewer leads to inlets as shown on Drawings. Seal connections inside and outside with hydraulic cement. Make connections watertight.

3.6 BACKFILL

A. Backfill area of excavation surrounding each completed inlet with Section 31 23 01 – Cement Stabilized Sand.

END OF SECTION 33 44 13

MAYOR
ANNISE D. PARKER

DISTRICT COUNCIL MEMBERS
BRENDA STARDIG - DISTRICT A
JERRY DAVIS - DISTRICT B
ELLEN COHEN - DISTRICT C
DWIGHT BOYKINS - DISTRICT D
DAVE MARTIN - DISTRICT E
RICHARD NGUYEN - DISTRICT F
OLIVER PENNINGTON - DISTRICT G
ED GONZALEZ - DISTRICT H
ROBERT GALLEGOS - DISTRICT I
MIKE LASTER - DISTRICT J
LARRY GREEN - DISTRICT K

HOUSTON AIRPORT SYSTEM

CONTROLLER
RONALD C. GREEN

COUNCIL MEMBERS AT LARGE
STEPHEN C. COSTELLO - AT LARGE 1
DAVID W. ROBINSON - AT LARGE 2
MICHAEL KUBOSH - AT LARGE 3
C.O. "BRAD" BRADFORD - AT LARGE 4
JACK CHRISTIE - AT LARGE 5

ISSUED FOR 100% BRIDGING DOCUMENTS
4 AUGUST 2015

PROGRAM MANAGEMENT OFFICE
GEORGE BUSH INTERCONTINENTAL AIRPORT

PROJECT TEAM

OWNER
HOUSTON AIRPORT SYSTEM
7800 AIRPORT BLVD
HOUSTON, TX 77016
CONTACT: BOB BARKER
PHONE: 713.775.2534
EMAIL: robert.barker2@houstontx.gov

ARCHITECT
JACOBS
5985 ROGERDALE RD
HOUSTON, TX 77072
CONTACT: CHRIS CASEY
PHONE: 281.776.2533
EMAIL: chris.casey@jacobs.com

CIVIL
ISANI CONSULTANTS
3143 YELLOWSTONE BLVD
HOUSTON, TX 77054
CONTACT: VINCENT JACOB
PHONE: 713.747.2399
EMAIL: vjacob@isaniconsultants.com

STRUCTURAL
HENDERSON + ROGERS
2603 AUGUSTA, SUITE 800
HOUSTON, TX 77057
CONTACT:ELAINE ROGERS
PHONE: 713.430.5801
EMAIL: erogers@rogersmoorellc.com

MEP
JONES ENGINEERS
9820 WHITHORN DR.
HOUSTON, TX 77095
CONTACT: GLYNN BROWN
PHONE: 713.222.7766
EMAIL: glynn@jonesengineers.com

IT / SECURITY
4B TECHNOLOGY
12600 NORTHBOROUGH DR
HOUSTON, TX 77067
CONTACT: MARK BASFORD
PHONE: 832.249.9379
EMAIL: mark.basford@4btechnology.com

HOUSTON AIRPORT SYSTEM

APPROVED

HOUSTON AIRPORT SYSTEM DIRECTOR OR DESIGNATED PDC REPRESENTATIVE — DATE

JACOBS
5985 Rogerdale Road
Houston, Texas
77072

P 832.351.6000
F 281.776.2501
W www.jacobs.com

TBPE Firm #2966

Seals:

THESE DOCUMENTS ARE FOR INTERIM REVIEW AND NOT FOR CONSTRUCTION, BIDDING OR PERMIT PURPOSES.

RESPONSIBLE ARCHITECT
CHRISTOPHER M. CASEY
24309
8-4-15

Project Client:
Houston Airport System
Project Address

Program Management Office

George Bush
Intercontinental Airport (IAH)

115 Standifer St.
Humble, TX 77338

Number	Description	Date
	95% REVIEW OF BRIDGING DOCUMENTS	21 MAY 2015
	100% BRIDGING DOCUMENTS	4 AUG 2015

Project No.:

Copyright: 2015 Jacobs Engineering

TDLR #:

Drawing Sheet Title:

COVER SHEET

Drawing Sheet Number:

G-000

Owner's Drawing Sheet No.:

&	AND
∠	ANGLE
[	CHANNEL
@	AT
℄	CENTER LINE
ø	DIAMETER OR ROUND
⊥	PERPENDICULAR
#	POUND OR NUMBER
(E)	EXISTING
A.B.S.	ACRYLONITRILE BUTADIENE STYRENE
ABV.	ABOVE
A/C	AIR CONDITIONING
ACOUS.	ACOUSTICAL
A.D.	AREA DRAIN
ADD.	ADDENDUM
A.F.F.	ABOVE FINISH FLOOR
AGG.	AGGREGATE
A.H.U.	AIR HANDLING UNIT
ALLOW.	ALLOWANCE
ALT.	ALTERNATE
ALUM.	ALUMINUM
ANOD.	ANODIZED
APX.	APPROXIMATE
ARCH.	ARCHITECT(URAL)
AUTO.	AUTOMATIC
AUX.	AUXILIARY
AVG.	AVERAGE
BD.	BOARD
BLDG.	BUILDING
BLK.	BLOCK
BLKG.	BLOCKING
BOT.	BOTTOM
CAB.	CABINET
C.B.	CATCH BASIN
CC.TV.	CLOSED-CIRCUIT TELEVISION
CER.	CERAMIC
C.G.	CORNER GUARD
C.H.	COAT HOOK
C.I.	CAST IRON
C.J.	CONTROL JOINT
CLG.	CEILING
CLO.	CLOSET
CLR.	CLEAR
C.M.U.	CONCRETE MASONRY UNIT
COL.	COLUMN
COMP.	COMPONENT
CONC.	CONCRETE
CONST.	CONSTRUCTION
CONT.	CONTINUOUS
CPT.	CARPET
C.R.	CURTAIN ROD
CS.	COUNTERSINK
C.T.	CERAMIC TILE
CU.FT.	CUBIC FEET (FOOT)
CU.IN.	CUBIC INCH
CU.YD.	CUBIC YARD
CX.	CONNECTION
C,P,C,I.	CONTRACTOR PROVIDED, CONTRACTOR INSTALLED
DBL.	DOUBLE
DEPT.	DEPARTMENT
DET.	DETAIL
D.F.	DRINKING FOUNTAIN
D.H.	DOUBLE HUNG
DIAG.	DIAGONAL
DIA.	DIAMETER
DIM.	DIMENSION
DIV.	DIVISION
DN.	DOWN
D.O.	DOOR OPENING
DR.	DOOR
DWG.	DRAWING
DWR.	DRAWER
E.	EAST
EA.	EACH
E/A	EXHAUST AIR
E.D.F.	ELECTRICAL DRINKING FOUNTAIN
E.H.D.	ELECTRICAL HAND DRYER
E.J.	EXPANSION JOINT
EL.	ELEVATION
ELEC.	ELECTRIC
ELEV.	ELEVATOR
EMER.	EMERGENCY
ENCL.	ENCLOSURE
EQ.	EQUAL
EQPT.	EQUIPMENT
EXH.	EXHAUST
EXP.	EXPANSION
EXPO.	EXPOSED
EXIST'G	EXISTING
EXT.	EXTERIOR
F.A.	FIRE ALARM
F.D.	FLOOR DRAIN
F.D.C.	FIRE DEPARTMENT CONNECTION
F.D.C.C.	FIRE DEPARTMENT CONNECTION CABINET
FDN.	FOUNDATION
F.E.	FIRE EXTINGUISHER
F.E.C.	FIRE EXTINGUISHER CABINET
FEM.	FEMALE
F.H.C.	FIRE HOSE CABINET
F.H.M.S.	FLAT HEAD MACHINE SCREW
F.H.R.	FIRE HOSE RACK
F.H.W.S.	FLAT HEAD WOOD SCREW
F.HY.	FIRE HYDRANT
FIN.	FINISH
FLASH.	FLASHING
FLEX.	FLEXIBLE
FLR.	FLOOR
FLUOR.	FLUORESCENT
F.MIR.	FRAMED MIRROR
F.MIR.SH.	FRAMED MIRROR AND SHELF
F.O.F.	FACE OF FINISH
F.O.S.	FACE OF STUDS
F.S.	FULL SIZE
FT.	FOOT (FEET)
FURR.	FURRED
FUT.	FUTURE
F.W.C.	FABRIC WALL COVERING
GA.	GAUGE
GALV.	GALVANIZED
G.B.	GRAB BAR
G.I.	GALVANIZED IRON
GL.	GLASS
GYP.	GYPSUM
H.	HIGH
H.B.	HOSE BIB
H.C.	HOLLOW CORE
HDWD.	HARDWOOD
HDWE.	HARDWARE
H.M.	HOLLOW METAL
HORIZ.	HORIZONTAL
H.PT.	HIGH POINT
HR.	HOUR
HT.	HEIGHT
I.D.	INSIDE DIAMETER
IN.	INCH
INCL.	INCLUDE
INSUL.	INSULATION
INT.	INTERIOR
INTM.	INTERMEDIATE
INV.	INVERT
JAN.	JANITOR
JT.	JOINT
KIT.	KITCHEN
K.O.	KNOCK OUT
LAB.	LABORATORY
LAM.	LAMINATE
LAV.	LAVATORY
LB.	POUND
LKR.	LOCKER
L.L.H.	LONG LEG HORIZONTAL
L.L.V.	LONG LEG VERTICAL
L.PT.	LOW POINT
LT.	LIGHT
LTL.	LINTEL
LVL.	LEVEL
LVR.	LOUVER
MAT'L	MATERIAL
MAX.	MAXIMUM
M.B.	MOP BASIN
M.B.H.	MOP-BROOM HOLDER
M.C.	MEDICINE CABINET
MECH.	MECHANICAL
MED.	MEDIUM
MEMB.	MEMBRANE
MET.	METAL
MEZZ.	MEZZANINE
MFR.	MANUFACTURE
MIN.	MINIMUM
MIR.	MIRROR
MISC.	MISCELLANEOUS
MLDG.	MOULDING
MTD.	MOUNTED
MTG.	MOUNTING
MULL.	MULLION
N.	NORTH
N.I.C.	NOT IN CONTRACT
NO.	NUMBER
NOM.	NOMINAL
N.T.S.	NOT TO SCALE
O.A.	OVER ALL
O/A	OUTSIDE AIR
O.C.	ON CENTER
O.D.	OUTSIDE DIAMETER
OFF.	OFFICE
O.P.C.I.	OWNER PROVIDED, CONTRACTOR INSTALLED
OPNG	OPENING
OPP.	OPPOSITE
OPP.H.	OPPOSITE HAND
OZ.	OUNCE
PBD.	PARTICLE BOARD
PL.	PLATE
P.LAM.	PLASTIC LAMINATE
PLAS.	PLASTER
PLYWD.	PLYWOOD
PNL.	PANEL(ING)
POL.	POLISH
PR.	PAIR
P.S.F.	POUNDS PER SQUARE FOOT
P.SH.	PURSE SHELF
P.S.I.	POUNDS PER SQUARE INCH
PT.	POINT
PTN.	PARTITION
Q.T.	QUARRY TILE
QTR.	QUARTER
R.	RISER
R/A	RETURN AIR
RAD.	RADIUS
REF.	REFERENCE
REFR.	REFRIGERATOR
REINF.	REINFORCED
REQ.	REQUIRE(D)
RESIL.	RESILIENT
REV.	REVISE
RM.	ROOM
R.O.	ROUGH OPENING
S.	SOUTH
S/A	SUPPLY AIR
SAM.	SANITARY
S.C.	SOLID CORE
SCHED.	SCHEDULE
S.D.	SOAP DISPENSER
SECT.	SECTION
SH.	SHELF
SHR.	SHOWER
SHT.	SHEET
SIM.	SIMILAR
S.N.D.	SANITARY NAPKIN DISPENSER
S.N.R.	SANITARY NAPKIN RECEPTACLE
S.M.R.	SANITARY NAPKIN-TAMPON DISPENSER
SQ.	SQUARE
S.SK.	SERVICE SINK
S.ST.	STAINLESS STEEL
ST.	STEEL
STA.	STATION
STD.	STANDARD
STOR.	STORAGE
STR.	STRUCTURE
SUR.	SURFACE
SUSP.	SUSPENDED
SYM.	SYMMETRICAL
SYS.	SYSTEM
T.	TREAD
T.B.	TOWEL BAR
T.D.	TOWEL DISPENSER
T.D.R.	TOWEL DISPENSER-RECEPTACLE
TEL.	TELEPHONE
TEMP.	TEMPERED
TERR.	TERRAZZO
T&G	TONGUE AND GROOVE
THER.	THERMAL
THK.	THICK(NESS)
THRES.	THRESHOLD
T.T.D.	TOILET TISSUE DISPENSER
TV.	TELEVISION
T.W.	TOP OF WALL
TYP.	TYPICAL
UR.	URINAL
U.N.O.	UNLESS NOTED OTHERWISE
V.C.T.	VINYL COMPOSITION TILE
VERT.	VERTICAL
VEST.	VESTIBULE
V.I.F.	VERIFY IN FIELD
VNR.	VENEER
V.M.C.	VINYL WALL COVERING
W.	WEST
W/	WITH
W.A.U.	WALL ASH URN
W.C.	WATER CLOSET
WD.	WOOD
WIN.	WINDOW
W/O	WITHOUT
WP.	WATERPROOF
W.R.	WASTE RECEPTACLE
W/R	WATER RESISTANT
WSCT.	WAINSCOT
WT.	WEIGHT

ABBREVIATIONS

1/8" = 1'-0" **25**

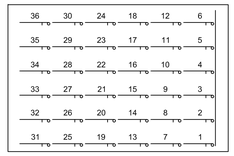

THE NUMBERS 1 THROUGH 25 ARE AVAILABLE FOR EACH SHEET AND IF USED ALWAYS APPEAR IN THE LOCATIONS SHOWN. DETAILS MAY BE DRAWN ON ONE OR MULTIPLE MODULES.

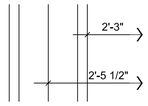

ALL DIMENSION ARE GIVEN TO FACE OF FINISH OR CENTERLINE, MODULE, OR SCHEDULE OR TYPICAL DETAIL CONDITION. MAY NOT BE FURTHER DIMENSIONED.

SHEET FORMAT & DIMENSIONING

1/8" = 1'-0" **17**

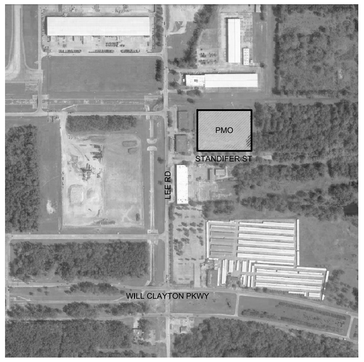

AREA MAP

N.T.S. **11**

- A — WINDOW TYPE
- 2 — LOUVER TYPE
- SLOT DIFFUSER
- RECESSED DOWN LIGHT
- RECESSED WALL WASHER
- 99.0 — EXISTING CONTOUR LINE
- 101.0 — NEW OR FINISH CONTOUR LINE
- TB-1 — TEST BORING
- N — PLAN NORTH / NORTH ARROW
- N — TRUE NORTH / NORTH ARROW
- 78.0 — EXISTING POINT ELEVATION
- 79.0 — NEW OR FINISH POINT ELEVATION
- LEVEL POINT / DATUM POINT
- 14A — PARTITION TYPE (RE: PARTITION SCHEDULE)
- 02 / 123 — DOOR NUMBER, LEVEL (RE: DOOR SCHEDULE)
- XX / 123 — DOOR NUMBER; LEVELS 5 THRU 15 "XX" INDICATES MULTIPLE TYPICAL LEVELS, (RE: DOOR SCHEDULE)
- 02132 — ROOM NUMBER, LEVEL
- XX132 — ROOM NUMBER; "XX" INDICATES MULTIPLE TYPICAL LEVELS, LEVELS 5 THRU 15 (RE: DOOR SCHEDULE)
- SPRINKLER HEAD
- NEW OR RELOCATED 2 X 2 RECESSED FLUORESCENT FIXTURE
- NEW OR RELOCATED 1 X 4 RECESSED FLUORESCENT FIXTURE
- NEW OR RELOCATED 2 X 4 RECESSED FLUORESCENT FIXTURE
- FLOURESCENT COVE/ UNDERCOUNTER LIGHT
- AMBIENT FLUORESCENT FIXTURE
- A / 1 — COLUMN LINE REFERENCE
- 3 — REVISION NUMBER
- 3 — KEY NOTE REFERENCE
- 3 / A-500 — ELEVATION NUMBER; SHEET NUMBER
- 3 / A-500 — BUILDING SECTION REFERENCE
- 3 / A-500 — PARTIAL BUILDING OR WALL SECTION REFERENCE
- DETAIL REFERENCE: DETAIL NUMBER; DIRECTION OF VIEW; 3 / A-500 — SHEET NUMBER
- DIMMING LIGHT SWITCH
- 3 WAY LIGHT SWITCH
- LIGHT SWITCH
- EXIT LIGHT W/ DIRECTION ARROWS
- SMOKE DETECTOR
- FIRE HORN
- 3 / A-500 — DETAIL NUMBER; LARGE SCALE REFERENCE; SHEET NUMBER
- 3 / A-500 — DETAIL NUMBER; SMALL SCALE REFERENCE; SHEET NUMBER
- PROPERTY LINE
- CENTER LINE
- ABOVE OR BEYOND LINE
- BREAK LINE
- P-1 / B-1 — WALL FINISH; BASE FINISH
- C-3 — FLOOR FINISH
- C-1 / C-3 — FLOOR FINISH TRANSITION

SYMBOLS

1/8" = 1'-0" **13**

- GRANULAR FILL
- CONCRETE
- BRICK
- STONE
- METAL LARGE SCALE
- METAL SMALL SCALE
- METAL LATH
- PLASTER, SAND, MORTAR, GROUT
- WOOD
- PLYWOOD LARGE SCALE
- FINISH WOOD
- CONTINUOUS
- BLOCKING
- GLASS ELEVATION
- GLASS
- INSULATION OR SOUND ATTENUATION
- EARTH
- PLYWOOD SMALL SCALE
- MASONRY
- CERAMIC TILE
- GYP. BD./ PLASTER
- RIGID INSULATION
- ACOUSTICAL TILE OR BOARD
- LOUVER IN WALL

MATERIALS SYMBOLS

NO SCALE **7**

GENERAL

G-000 COVER SHEET
G-001 SHEET INDEX, AREA MAP, GENERAL INFORMATION, ABBREVIATIONS, AND SYMBOLS
G-002 CODE ANALYSIS AND LIFE SAFETY PLAN
G-010 ACCESSIBILITY STANDARDS
G-011 ACCESSIBILITY STANDARDS
G-012 ACCESSIBILITY STANDARDS

CIVIL

C0.01 GENERAL NOTES
C0.02 EXISTING CONDITIONS
C1.00 DEMOLITION PLAN
C2.00 IMPERVIOUS PLAN
C2.01 FIRE LANE PLAN
C2.02 DIMENSIONAL LAYOUT PLAN
C3.00 DRAINAGE PLAN
C3.01 DRAINAGE CALCULATION
C3.02 GRADING PLAN
C4.00 UTILITY PLAN
C5.00 STORM WATER POLLUTION PREVENTION PLAN
C5.01 STORM WATER POLLUTION PREVENTION DETAILS
C6.00 TRAFFIC CONTROL PLAN
C7.00 COH AND SITE DETAILS
C7.01 COH AND SITE DETAILS
C7.02 COH AND SITE DETAILS

STRUCTURAL

S-100 GENERAL NOTES
S-200 FOUNDATION PLAN
S-201 LOW ROOF PLAN
S-202 HIGH ROOF PLAN
S-300 FOUNDATION TYPICAL DETAILS
S-301 FOUNDATION TYPICAL DETAILS
S-302 FOUNDATION TYPICAL DETAILS
S-310 FOUNDATION DETAILS
S-400 FRAMING TYPICAL DETAILS
S-401 FRAMING TYPICAL DETAILS
S-410 ROOF FRAMING DETAILS
S-500 BRACING TYPICAL DETAILS
S-501 BRACE ELEVATIONS
S-600 TYPICAL PANEL DETAILS
S-601 TYPICAL PANEL DETAILS

ARCHITECTURAL

AS-100 ARCHITECTURAL SITE PLAN
A-101 ARCHITECTURAL FLOOR PLAN
A-111 ARCHITECTURAL ROOF PLAN
A-121 ARCHITECTURAL REFLECTED CEILING PLAN
A-131 ARCHITECTURAL FLOOR FINISH PLAN
A-141 ARCHITECTURAL FURNITURE AND EQUIPMENT PLAN (FOR REFERENCE ONLY)
A-201 EXTERIOR ELEVATIONS
A-211 TILT WALL PANEL LAYOUT AND TYPES
A-301 BUILDING SECTIONS
A-311 WALL SECTIONS
A-312 WALL SECTIONS
A-401 ENLARGED FLOOR PLANS
A-411 INTERIOR ELEVATIONS
A-412 INTERIOR ELEVATIONS
A-413 INTERIOR ELEVATIONS
A-501 PLAN DETAILS
A-511 SECTION DETAILS
A-602 ROOM FINISH SCHEDULE
A-603 FINISH LEGEND
A-604 DOOR SCHEDULE AND DOOR TYPES
A-607 GLAZING AND WINDOW TYPES
A-801 RENDERED FLOOR PLAN
A-802 EXTERIOR RENDERINGS
A-803 INTERIOR RENDERINGS
A-804 INTERIOR RENDERINGS
A-805 MATERIAL BOARDS

PLUMBING

P0.01 PLUMBING ABBREVIATIONS AND SYMBOLS
P1.01 UNDER GROUND PLUMBING PLAN
P1.02 PLUMBING FLOOR PLAN
P3.01 PLUMBING DETAILS
P3.02 PLUMBING DETAILS

MECHANICAL

M0.01 MECHANICAL ABBREVIATIONS AND SYMBOLS
M1.01 MECHANICAL FLOOR PLAN
M1.02 MECHANICAL ROOF PLAN
M3.01 MECHANICAL DETAILS

ELECTRICAL

E0.01 ELECTRICAL ABBREVIATIONS AND SYMBOLS
E1.00 ELECTRICAL SITE PLAN
EL1.01 ELECTRICAL LIGHTING PLAN
EP1.01 ELECTRICAL POWER PLAN
EP1.02 ELECTRICAL ROOF PLAN
E3.01 ELECTRICAL RISER DIAGRAM
E3.02 ELECTRICAL SCHEDULES
E3.03 ELECTRICAL DETAILS
FA1.01 FIRE PROTECTION PLAN

TECHNOLOGY

T-010 TELECOM SITE PLAN
T-100 TELECOM PLAN LEVEL 1
T-400 MDF AND IDF ENLARGED PLANS AND ELEVATIONS
T-500 TELECOM DETAILS
T-501 TELECOM DETAILS
T-502 TELECOM OSP DETAILS
TA-100 AV PLAN LEVEL 1
TA-500 AV DETAILS
TY-100 SECURITY PLAN LEVEL 1
TY-500 SECURITY DETAILS

SHEET INDEX

NO SCALE **1**

HOUSTON AIRPORT SYSTEM

APPROVED

HOUSTON AIRPORT SYSTEM DIRECTOR OR DESIGNATED PDC REPRESENTATIVE — DATE

JACOBS

5985 Rogerdale Road
Houston, Texas
77072

P 832.351.6000
F 281.776.2501
W www.jacobs.com

TBPE Firm #2966

Seals:

THESE DOCUMENTS ARE FOR INTERIM REVIEW AND NOT FOR CONSTRUCTION, BIDDING OR PERMIT PURPOSES.

RESPONSIBLE ARCHITECT
CHRISTOPHER M. CASEY
24309
8-4-15

Project Client:
Houston Airport System
Project Address

Program Management Office

George Bush Intercontinental Airport (IAH)

115 Standifer St.
Humble, TX 77338

Number	Description	Date
	95% REVIEW OF BRIDGING DOCUMENTS	21 MAY 2015
	100% BRIDGING DOCUMENTS	4 AUG 2015

Project No.:

Copyright: 2015 Jacobs Engineering

TDLR #:

Drawing Sheet Title:

SHEET INDEX, AREA MAP, GENERAL INFORMATION, ABBREVIATIONS, AND SYMBOLS

Drawing Sheet Number:

G-001

Owner's Drawing Sheet No.:
-

APPLICABLE CODES

APPLICABLE CODES:
2006 INTERNATIONAL BUILDING CODE (IBC) WITH CITY OF HOUSTON AMENDMENTS
2006 UNIFORM MECHANICAL CODE (UMC) WITH CITY OF HOUSTON AMENDMENTS
2014 NATIONAL ELECTRICAL CODE (NEC) WITH CITY OF HOUSTON AMENDMENTS
2009 INTERNATIONAL ENERGY CONSERVATION CODE (IECC)
WITH CITY OF HOUSTON AMENDMENTS
2006 UNIFORM PLUMBING CODE (UPC) WITH CITY OF HOUSTON AMENDMENTS
2006 INTERNATIONAL FIRE CODE (IFC) WITH CITY OF HOUSTON AMENDMENTS
2012 TEXAS ACCESSIBILITY STANDARDS

APPLICABLE CODES — NO SCALE — 24

CH. 6 - TYPE OF CONSTRUCTION

GROUP B, TYPE II-B CONSTRUCTION	NEW CONSTRUCTION
STRUCTURAL FRAME	0 HOURS TABLE 601
BEARING WALLS EXTERIOR, SEPARATION > 30'-0" INTERIOR	 0 HOUR TABLE 601, TABLE 602 0 HOURS TABLE 601
NON-BEARING WALLS & PARTITIONS EXTERIOR, SEPARATION > 30'-0" INTERIOR	 0 HOUR TABLE 601, TABLE 602 0 HOURS TABLE 601
FLOOR CONSTRUCTION ROOF CONSTRUCTION (< 20'-0")	0 HOURS TABLE 601 0 HOURS TABLE 601
GROUP A-3, TYPE II-B CONSTRUCTION	
STRUCTURAL FRAME	0 HOURS TABLE 601
BEARING WALLS EXTERIOR, SEPARATION > 30'-0" INTERIOR	 0 HOUR TABLE 601, TABLE 602 0 HOURS TABLE 601
NON-BEARING WALLS & PARTITIONS EXTERIOR, SEPARATION > 30'-0" INTERIOR	 0 HOUR TABLE 601, TABLE 602 0 HOURS TABLE 601
FLOOR CONSTRUCTION ROOF CONSTRUCTION (< 20'-0")	0 HOURS TABLE 601 0 HOURS TABLE 601

TYPE OF CONSTRUCTION — NO SCALE — 23

PARKING REQUIREMENTS

CODE: CITY OF HOUSTON (CODE OF ORDINANCES CH. 26)
SECTION 26-490 USE OF PARKING SPACE OR BICYCLE SPACE
SECTION 26-491 FRACTIONAL REQUIREMENTS
SECTION 26-492 PARKING SPACES FOR CERTAIN TYPES OF USE CLASSIFICATIONS
SECTION 26-497 REDUCED PARKING SPACE REQUIREMENT FOR ADDITIONAL BICYCLE SPACES

CODE: 2012 TEXAS ACCESSIBILITY STANDARDS
TABLE 208.2 MINIMUM NUMBER OF ACCESSIBLE PARKING SPACES

BLDG. SQ. FT.: 42,960 SQ. FT.
OFFICE/STORAGE
42,960 SQ. FT. UFA (2.75 SPACES PER 1000 SQ. FT. UFA)
42,960/1000 = 42.960 X 2.75 = 118.140 = 119 TOTAL SPACES

REQUIRED PARKING: 119 (5 ACCESSIBLE PARKING SPACES REQUIRED)
PROVIDED PARKING: 201 (7 ACCESSIBLE PARKING SPACES REQUIRED, 7 PROVIDED)

PARKING REQUIREMENTS — NO SCALE — 28

CH. 5 - GENERAL BLDG. HEIGHTS & AREAS

ALL AREAS ARE SPRINKLERED

GROUP B CONSTRUCTION TYPE ALLOWABLE HEIGHTS	II-B 4 STORIES + 1, 55'-0" + 20'-0" = 5 STORIES, 75'-0"	
PROPOSED HEIGHT ALLOWABLE AREA (PER FLOOR)	1 STORY, 27'-5" 23,000 SQ. FT. + 200% = 69,000 SQ. FT.	TABLE 503, 504.2 TABLE 503, 506.3
GROUP A-3 CONSTRUCTION TYPE ALLOWABLE HEIGHTS	II-B 2 STORIES + 1, 55'-0" + 20'-0" =3 STOREIS, 75'-0"	TABLE 503, 504.2
PROPOSED HEIGHT ALLOWABLE AREA (PER FLOOR)	1 STORY, 27'-5" 9,500 SQ. FT. + 200% = 28,500 SQ. FT.	TABLE 503, 506.3

GENERAL BUILDING HEIGHTS & AREAS — NO SCALE — 22

PLUMBING FIXTURES

2006 IBC, SEC. 2902, TOTAL OCCUPANCY - 704 (B: 382, A-3: 322)

	WATER CLOSETS		URINAL		LAVATORIES		DRINKING FOUNTAINS		SERVICE SINKS	
	REQ.	PROV.	REQ.	PROV.	REQ.	PROV.	REQ.	PROV.	REQ.	PROV.
MEN (B: 191) (A-3: 161)	7	6	50% (SEC. 2902.5)	2	5	6	5	4 DRINKING FOUNTAINS (2 FULL HEIGHT + 2 ACCESSIBLE) + 3 FILLING STATIONS	1	1
WOMEN (B: 191) (A-3: 161)	8	8	N/A	-	5	6				

PLUMBING FIXTURES — NO SCALE — 33

CH. 3 - USE & OCC. CLASSIFICATION

OCCUPANCY CLASSIFICATION		CODE REFERENCE/ REMARKS
NEW STRUCTURE GROUP B GROUP A-3	BUSINESS ASSEMBLY	SECTION 304 SECTION 303
CONSTRUCTION CLASSIFICATION		
II-B (SPRINKLERED)		TABLE 601

USE & OCC. CLASSIFICATION — NO SCALE — 27

OCCUPANCY TYPE & LOAD (FIRST FLR.)

TABLE 1004.1.1

OCCUPANCY CLASSIFICATION	SPECIFIC USE	S.F.	S.F. PER OCC.	OCCUPANCY
B	OFFICE	38,135	100	382
A-3	ASSEMBLY	4,825	15	322
	TOTAL	42,960		704

OCCUPANCY TYPE & LOAD — NO SCALE — 21

CH. 7 - FIRE RESISTANT CONSTRUCTION

SHAFT ENCLOSURES CONNECTING <4 STORIES	1 HOUR	SECTION 707.4
VERTICAL EXIT ENCLOSURES CONNECTING <4 STORIES	1 HOUR	SECTION 1019.1
EXIT PASSAGEWAYS	1 HOUR	SECTION 1020.3
HORIZONTAL EXITS	>=2 HOURS	SECTIONS 705, 706
SEPARATION OF SINGLE OCC. INTO FIRE AREAS	2 HOURS	TABLE 706.3.7
FIRE BARRIERS	NOT REQ'D FOR A, B, OR M OCC.	

FIRE RESISTANT CONSTRUCTION — NO SCALE — 32

CH. 5 - REQUIRED SEPARATION OF OCCUPANCIES (HOURS)

ALL AREAS ARE SPRINKLERED

GROUP B & GROUP A-3	1 HOUR	TABLE 508.3.3

REQUIRED SEPARATION OF OCCUPANCIES (HOURS) — NO SCALE — 26

CH. 4 - SPECIAL DETAIL REQUIREMENTS BASED ON USE AND OCCUPANCY

ATRIUMS	NO ATRIUMS	SECTION 404

SPECIAL DETAIL REQUIREMENTS — NO SCALE — 20

CH. 9 - FIRE PROTECTION SYSTEM

GROUP B		
SPRINKLER SYSTEM STANDPIPE SYSTEM PORTABLE FIRE EXTINGUISHERS FIRE ALARM SYSTEM (MANUAL)	NOT REQUIRED NOT REQUIRED REQUIRED REQUIRED	SECTION 903.2 SECTION 905.3 SECTION 906.1 SECTION 907.2.2
GROUP A-3		
SPRINKLER SYSTEM STANDPIPE SYSTEM PORTABLE FIRE EXTINGUISHERS FIRE ALARM SYSTEM (MANUAL)	REQUIRED NOT REQUIRED REQUIRED REQUIRED	SECTION 903.2 SECTION 905.3 SECTION 906.1 SECTION 907.2.2

BUILDING CODE ANALYSIS AND REVIEW — NO SCALE — 31

EGRESS CALCULATIONS - FIRST FLOOR (OCC. TYPE B)

TABLE 1005.1 - EGRESS WIDTH PER OCCUPANT SERVED WITH SPRINKLER SYSTEM - 0.20"/OCCUPANT		1015.2 - EXIT OR EXIT ACCESS DOORWAY ARRANGEMENT		TABLE 1016.1 EXIT ACCESS DISTANCE		TABLE 1019.1 MINIMUM NO. OF EXITS FOR OCCUPANT LOAD	
EGRESS WIDTH REQUIRED:	32"	REQUIRED DISTANCE BETWEEN EXITS:	NOT LESS THAN (244'-0" / 3) = 81'-4"	ALLOWABLE	250'-0"	1-500	MIN. NO. OF EXITS: 2 REQUIRED 5 PROVIDED
EGRESS WIDTH PROVIDED:	36"	ACTUAL DISTANCE BETWEEN EXITS:	101'-0"	MAX. TRAVEL DISTANCE	212'-1"		

EGRESS CALCULATIONS - FIRST FLOOR (OCC. TYPE A)

TABLE 1005.1 - EGRESS WIDTH PER OCCUPANT SERVED WITH SPRINKLER SYSTEM - 0.20"/OCCUPANT		1015.2 - EXIT OR EXIT ACCESS DOORWAY ARRANGEMENT		TABLE 1016.1 EXIT ACCESS DISTANCE		TABLE 1019.1 MINIMUM NO. OF EXITS FOR OCCUPANT LOAD	
EGRESS WIDTH REQUIRED:	32"	REQUIRED DISTANCE BETWEEN EXITS:	NOT LESS THAN (70'-0" / 3) = 23'-4"	ALLOWABLE	250'-0"	1-500 (X 2)	MIN. NO. OF EXITS: 2 X 2 = 4 REQUIRED 5 PROVIDED
EGRESS WIDTH PROVIDED:	36"	ACTUAL DISTANCE BETWEEN EXITS:	61'-0"	MAX. TRAVEL DISTANCE	212'-1"		

EGRESS CALCULATIONS — NO SCALE — 19

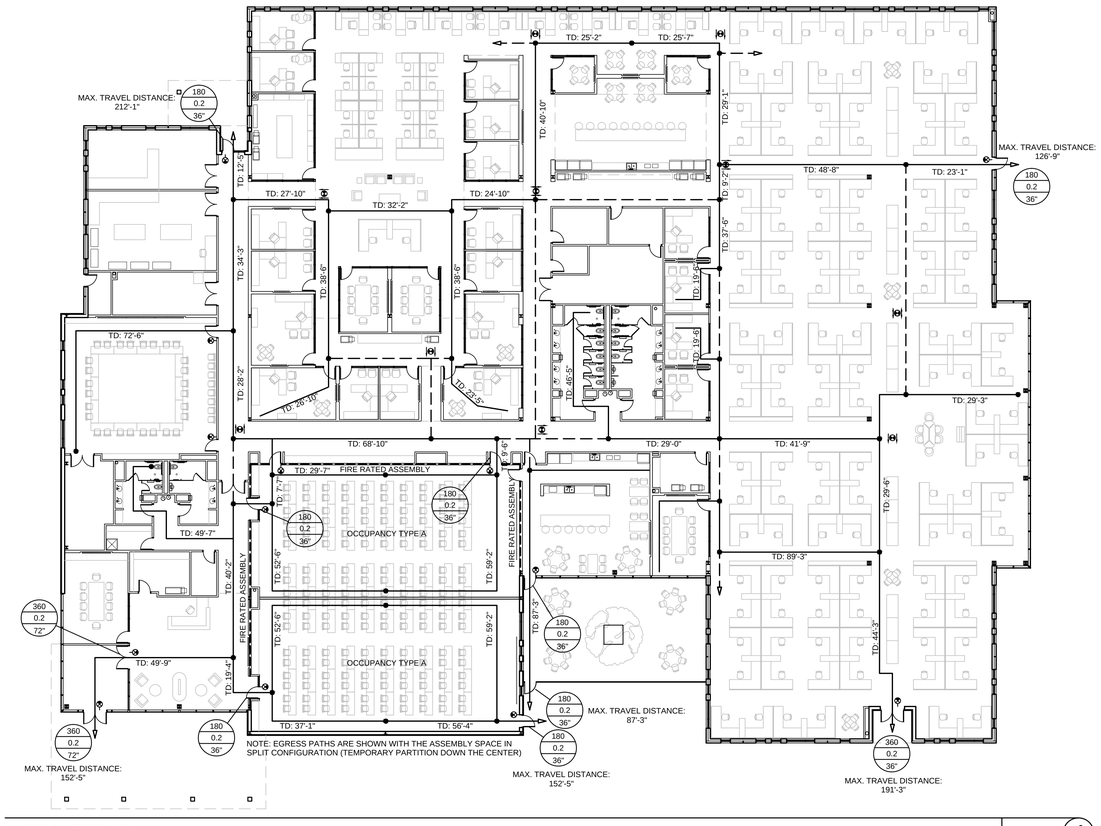

LIFE SAFETY PLAN — 1/16" - 1'-0" — 1

HOUSTON AIRPORT SYSTEM

APPROVED

HOUSTON AIRPORT SYSTEM DIRECTOR OR DESIGNATED PDC REPRESENTATIVE — DATE

JACOBS
5985 Rogerdale Road
Houston, Texas
77072

P 832.351.6000
F 281.776.2501
W www.jacobs.com

TBPE Firm #2966

Seals:

THESE DOCUMENTS ARE FOR INTERIM REVIEW AND NOT FOR CONSTRUCTION, BIDDING OR PERMIT PURPOSES.

RESPONSIBLE ARCHITECT
CHRISTOPHER M. CASEY
24309
8-4-15

Project Client:
Houston Airport System
Project Address

Program Management Office

George Bush Intercontinental Airport (IAH)

115 Standifer St.
Humble, TX 77338

Number	Description	Date
	95% REVIEW OF BRIDGING DOCUMENTS	21 MAY 2015
	100% BRIDGING DOCUMENTS	4 AUG 2015

Key Plan — Project North

0 16 32 48
GRAPHIC SCALE: 1/16" = 1'-0"

Project No.:

Copyright: 2015 Jacobs Engineering

TDLR #:

Drawing Sheet Title:

CODE ANALYSIS AND LIFE SAFETY PLAN

Drawing Sheet Number:

G-002

Owner's Drawing Sheet No.:
-

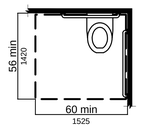

Figure 604.3.1
Size of Clearance
at Water Closets

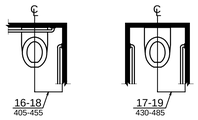

(a)
wheelchair
accessible
water closets

(b)
ambulatory
accessible water
closets

Figure 604.2 Water Closet Location

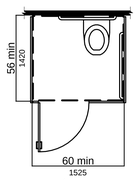

(a)
adult wall hung
water closet

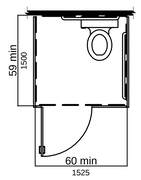

(b)
adult floor mounted water closet
and children's water closet

Figure 604.8.1.1 Size of Wheelchair
Accessible Toilet Compartment

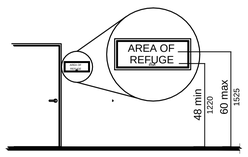

Figure 703.4.1
Height of Tactile Characters
Above Finish Floor or Ground

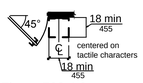

Figure 703.4.2
Location of Tactile
Signs at Doors

Figure 703.6.1
Pictogram Field
dark-on-light.

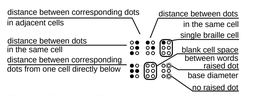

Figure 703.3.1 Braille Measurement

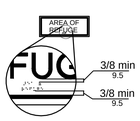

Figure 703.3.2
Position of Braille

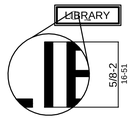

Figure 703.2.5
Height of Raised Characters

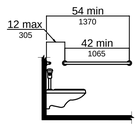

Figure 604.5.1
Side Wall Grab Bar
at Water Closets

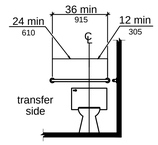

Figure 604.5.2
Rear Wall Grab Bar
at Water Closets

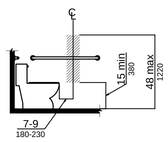

Figure 604.7
Dispenser Outlet Location

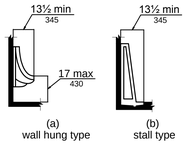

(a)
wall hung type

(b)
stall type

Figure 605.2
Height and Depth of Urinals

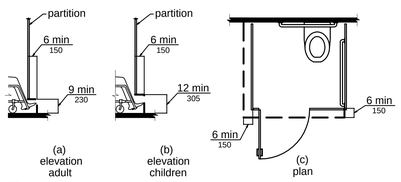

(a)
elevation
adult

(b)
elevation
children

(c)
plan

Figure 604.8.1.4
Wheelchair Accessible Toilet Compartment Toe Clearance

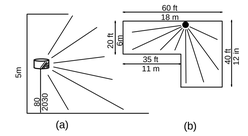

(a)

(b)

(d)

(c)

(e)
INCORRECT (TOO MUCH
OVERLAPPING COVERAGE)

(f)
INCORRECT (AREAS
COVERAGE OF EACH
APPLIANCE NOT MAXIMIZED)

Examples of Visible Signal
Appliance Placement

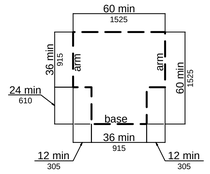

Figure 304.3.2
T-Shaped Turning Space

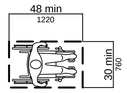

Figure 305.3
Clear Floor or Ground Space

Wheelchair Turning Space

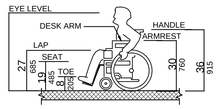

Dimensions of Adult -Sized Wheelchairs

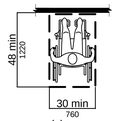

(a)
forward

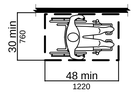

(b)
parallel

Figure 305.5 Position of Clear Floor or Ground Space

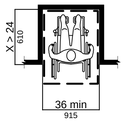

Figure 305.7.1
Maneuvering Clearance in an
Alcove, Forward Approach

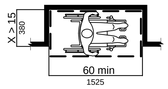

Figure 305.7.2
Maneuvering Clearance in an
Alcove, Parallel Approach

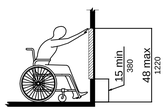

Figure 308.2.1
Unobstructed Forward Reach

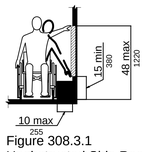

Figure 308.3.1
Unobstructed Side Reach

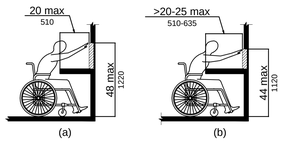

(a)

(b)

Figure 308.2.2 Obstructed High Forward Reach

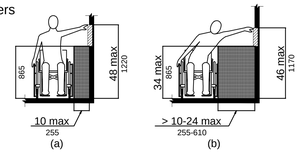

(a)

(b)

Figure 308.3.2 Obstructed High Side Reach

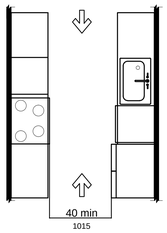

Figure 804.2.1
Pass Through Kitchens

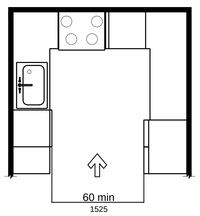

Figure 804.2.2
U-Shaped Kitchens (a)

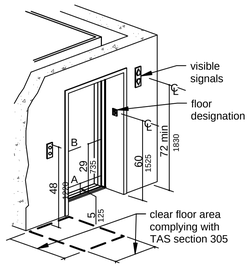

NOTE: The automatic door reopening device is activated if an object passes through either line A or line B. Line A and line B represent the vertical locations of the door reopening device not requiring contact.

Hoistway and Elevator Entrances

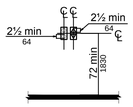

Figure 407.2.2.2
Visible Hall Signals

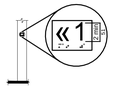

Figure 407.2.3.1
Floor Designations on
Jambs of Elevator
Hoistway Entrances

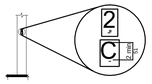

Figure 407.2.3.2
Car Designations on Jambs of
Destination-Oriented Elevator
Hoistway Entrances

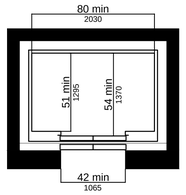

(a)
centered door

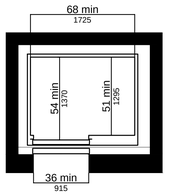

(b)
side (off-centered) door

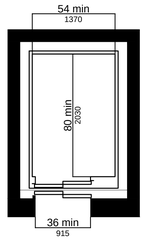

(c)
any door location

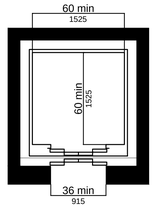

(d)
any door location

Figure 407.4.1 Elevator Car Dimensions

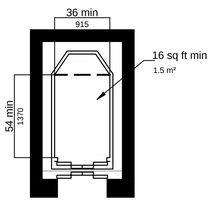

(e)
Exception
existing elevator car configuration

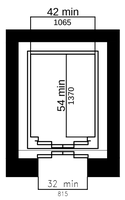

(a)
new construction

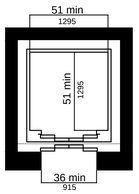

(b)
Exception 1

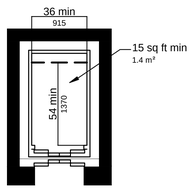

(c)
Exception 2

Figure 408.4.1
Limited-Use/Limited-Application (LULA) Elevator Car Dimensions

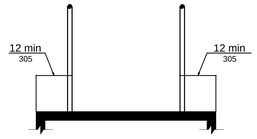

Figure 405.9.1
Extended Floor or Ground Surface
Edge Protection

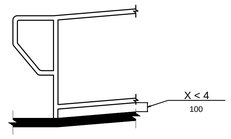

Figure 405.9.2
Curb or Barrier Edge Protection

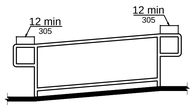

Figure 505.10.1
Top and Bottom Handrail Extension
at Ramps

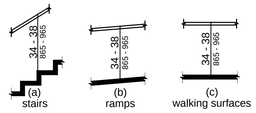

(a)
stairs

(b)
ramps

(c)
walking surfaces

Figure 505.4 Handrail Height

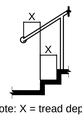

Note: X = tread depth

Figure 505.10.3
Bottom Handrail Extension at Stairs

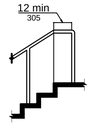

Figure 505.10.2
Top Handrail Extension at Stairs

NOTE FROM TEXT: 4.24. GRAB BARS, AND TUB AND SHOWER SEATS. 4.24.3 Structural strength. Allowable stresses in bending, shear and tension shall not be exceeded for materials used when a vertical or horizontal force of 250 lb (1112N) is applied at any point on the grab bar, seat or fastener mounting device or supporting structure.

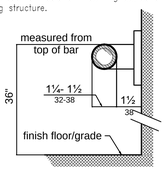

Grab Bar Size, Spacing and Height

Figure 505.5
Handrail Clearance

Figure 505.6
Horizontal Projections
Below Gripping Surface

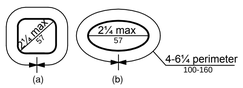

Figure 505.7.2
Handrail Non-Circular Cross Section

Figure 406.2
Counter Slope of Surfaces Adjacent to Curb Ramps

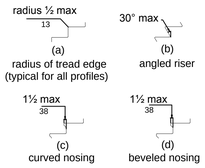

Figure 504.5 Stair Nosings

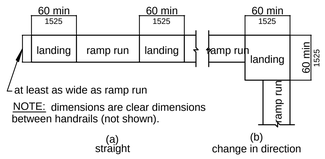

(a)
straight

(b)
change in direction

Figure 405.7 Ramp Landings

HOUSTON AIRPORT SYSTEM

APPROVED

HOUSTON AIRPORT SYSTEM
DIRECTOR OR DESIGNATED
PDC REPRESENTATIVE

DATE

JACOBS

5985 Rogerdale Road
Houston, Texas
77072

P 832.351.6000
F 281.776.2501
W www.jacobs.com

TBPE Firm #2966

Seals:

THESE DOCUMENTS ARE
FOR INTERIM REVIEW AND NOT
FOR CONSTRUCTION, BIDDING
OR PERMIT PURPOSES.

RESPONSIBLE ARCHITECT
CHRISTOPHER M. CASEY
24309
8-4-15

Project Client:
Houston Airport System
Project Address

Program Management Office

George Bush
Intercontinental Airport (IAH)

115 Standifer St.
Humble, TX 77338

Number	Description	Date
	95% REVIEW OF BRIDGING DOCUMENTS	21 MAY 2015
	100% BRIDGING DOCUMENTS	4 AUG 2015

Project No.:

Copyright: 2015 Jacobs Engineering

TDLR #:

Drawing Sheet Title:

ACCESSIBILITY
STANDARDS

Drawing Sheet Number:

G-010

Owner's Drawing Sheet No.:
-

Table 225.3 Self-Service Storage Facilities

Total Spaces in Facility	Minimum Number of Spaces Required to be Accessible
1 to 200	5 percent, but no fewer than 1
201 and over	10 plus 2 percent of total number of units over 200

NOTES FROM TEXT

TAS (2012) 225
STORAGE

- 225.2 Storage: Where storage is provided in accessible spaces, at least one of each type shall comply,..
- 225.2.1 Lockers: Where lockers are provided, at least 5 percent, but no fewer than one of each type, shall comply with 811.

ADA (2010) 804.5
STORAGE

- 804.5 Storage: At least 50 percent of shelf space in storage facilities shall comply...

TAS (2012) 903
BENCHES

- 903.3 Size: Benches shall have seats that are 42 inches (1065 mm) long minimum and 20 inches (510 mm) deep minimum and 24 inches (610 mm) deep maximum.
- 903.3 Height: The top of the bench seat surface shall be 17 inches (430 mm) minimum and 19 inches (485 mm) maximum above the finish floor or ground.

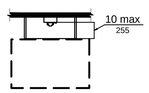

Figure 704.2.1.1
Parallel Approach to Telephone

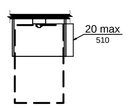

Figure 704.2.1.2
Forward Approach to Telephone

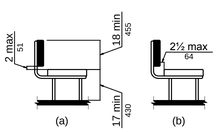

Figure 903.4 Bench Back Support

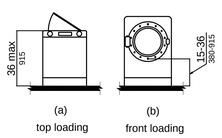

Figure 611.4
Height of Laundry Compartment Opening

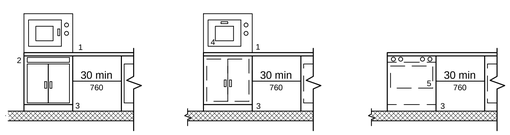

SYMBOL KEY
1. Countertop or wall-mounted oven
2. Pull-out board preferred with side-opening door
3. Clear open space
4. Bottom-hinged door

Ovens without Self-Cleaning Feature

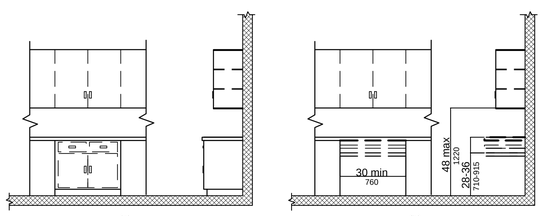

Counter Work Surface

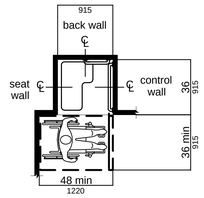

Note: inside finished dimensions measured at the center points of opposing sides

Figure 608.2.1
Transfer Type Shower Compartment Size and Clearance

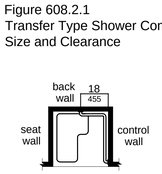

Figure 608.3.1
Grab Bars for Transfer Type Showers

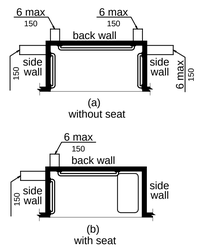

Figure 608.3.2
Grab Bars for Standard Roll-In Type Showers

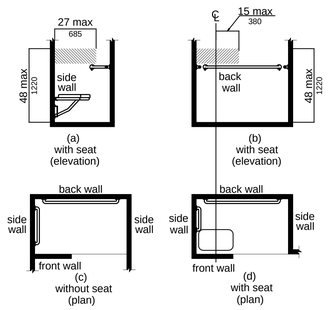

Figure 608.5.3
Alternate Roll-In Type Shower Compartment Control Location

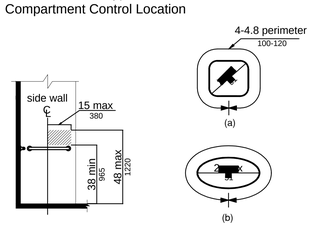

Figure 608.5.1
Transfer Type Shower Compartment Control Location

Figure 609.2.2
Grab Bar Non-Circular Cross Section

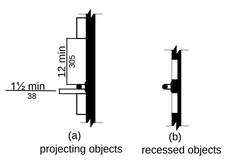

Figure 609.3 Spacing of Grab Bars

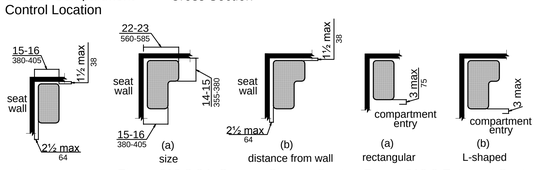

Figure 610.3.1
Rectangular Shower Seat

Figure 610.3.2 L-Shaped Shower Seat

Figure 610.3 Extent of Seat

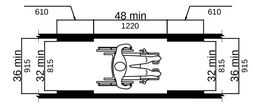

Figure 403.5.1
Clear Width of an Accessible Route

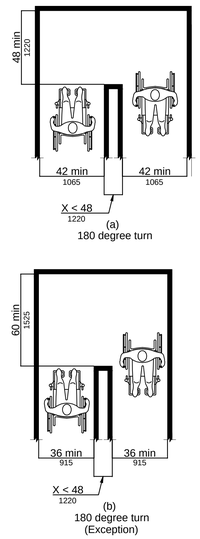

Figure 403.5.2 Clear Width at Turn

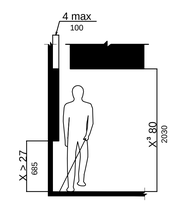

Figure 307.2
Limits of Protruding Objects

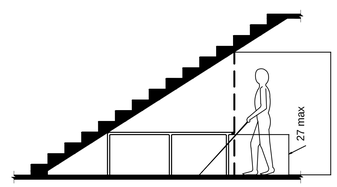

Figure 307.4 Vertical Clearance

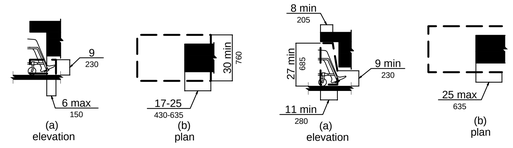

Figure 306.2 Toe Clearance

Figure 306.3 Knee Clearance

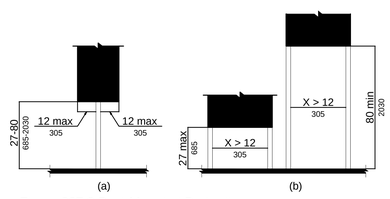

Figure 307.3 Post-Mounted Protruding Objects

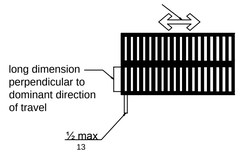

Figure 302.3
Elongated Openings in Floor or Ground Surfaces

NOTES FROM TEXT

TAS (2012) 303.2: Vertical. Changes in level of 1/4 inch (6.4 mm) high maximum shall be permitted to be vertical.

TAS (2012) 303.3: Beveled. Changes in level between 1/4 inch (6.4 mm) high minimum and 1/2 inch (13 mm) high maximum shall be beveled with a slope not steeper than 1:2.

Advisory... Changes in level exceeding 1/2 inch must comply with 405 (Ramps)...

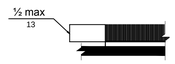

Figure 302.2 Carpet Pile Height

Figure 303.2 Vertical Change in Level

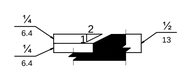

Figure 303.3 Beveled Change in Level

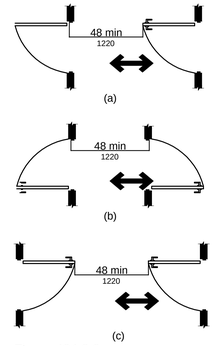

Figure 404.2.6
Doors in Series and Gates in Series

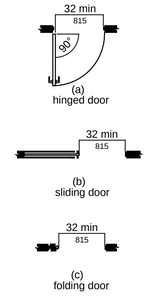

Figure 404.2.3
Clear Width of Doorways

Table 404.2.4.1
Maneuvering Clearances at Manual Swinging Doors and Gates

Type of Use		Minimum Maneuvering Clearance	
Approach Direction	Door or Gate Side	Perpendicular to Doorway	Parallel to Doorway (beyond latch side unless noted)
From Front	Pull	60 inches (1525 mm)	18 inches (455 mm)
From Front	Push	48 inches (1220 mm)	0 inches (0 mm)
From Hinge Side	Pull	60 inches (1525 mm)	36 inches (915 mm)
From Hinge Side	Pull	54 inches (1370 mm)	42 inches (1065 mm)
From Hinge Side	Push	42 inches (1065 mm) [2]	22 inches (560 mm)
From Latch Side	Pull	48 inches (1220 mm) [4]	24 inches (610 mm)
From Latch Side	Push	42 inches (1065 mm) [4]	24 inches (610 mm)

1. Add 12 inches (305 mm) if closer and latch are provided.
2. Add 6 inches (150 mm) if closer and latch are provided.
3. Beyond hinge side.
4. Add 6 inches (150 mm) if closer if provided.

Table 404.2.4.2
Maneuvering Clearances at Doorways without Doors and Gates, Manual Sliding Doors and Manual Folding Doors

	Minimum Maneuvering Clearance	
Approach Direction	Perpendicular to Doorway	Parallel to Doorway (beyond stop/latch side unless noted)
From Front	48 inches (1220 mm)	0 inches (0 mm)
From Side [1]	42 inches (1065 mm)	0 inches (0 mm)
From Pocket/Hinge Side	42 inches (1065 mm)	22 inches (560 mm) [2]
From Stop/Latch Side	42 inches (1065 mm)	24 inches (610 mm)

1. Doorway with no door only.
2. Beyond pocket/hinge side.

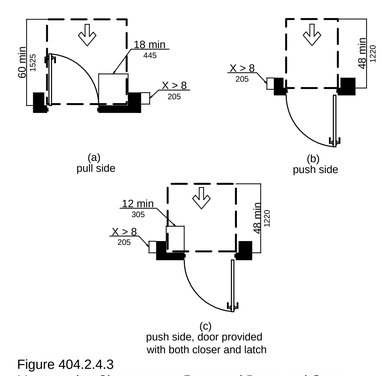

Figure 404.2.4.3
Maneuvering Clearances at Recessed Doors and Gates

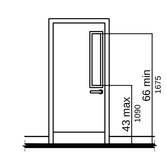

Vision Lights (TAS 404.2.11)

NOTES FROM TEXT

TAS (2012) 404.2.11 Vision Lights: Doors, gates, and side lights adjacent to doors or gates, containing one or more glazing panels that permit viewing through the panels shall have the bottom of at least one glazed panel located 43 inches (1090 mm) maximum above the finish floor.

EXCEPTION: Vision lights with the lowest part more than 66 inches (1675 mm) from the finish floor or ground shall not be required to comply with 404.2.11.

HOUSTON AIRPORT SYSTEM

APPROVED

HOUSTON AIRPORT SYSTEM DIRECTOR OR DESIGNATED PDC REPRESENTATIVE — DATE

JACOBS
5985 Rogerdale Road
Houston, Texas
77072

P 832.351.6000
F 281.776.2501
W www.jacobs.com

TBPE Firm #2966

Seals:

THESE DOCUMENTS ARE FOR INTERIM REVIEW AND NOT FOR CONSTRUCTION, BIDDING OR PERMIT PURPOSES.

RESPONSIBLE ARCHITECT
CHRISTOPHER M. CASEY
24309
8-4-15

Project Client:
Houston Airport System
Project Address

Program Management Office

George Bush
Intercontinental Airport (IAH)

115 Standifer St.
Humble, TX 77338

Number	Description	Date
	95% REVIEW OF BRIDGING DOCUMENTS	21 MAY 2015
	100% BRIDGING DOCUMENTS	4 AUG 2015

Project No.:

Copyright: 2015 Jacobs Engineering

TDLR #:

Drawing Sheet Title:

ACCESSIBILITY STANDARDS

Drawing Sheet Number:

G-011

Owner's Drawing Sheet No.:
-

NOTES FROM TEXT

TAS (2012) 606 LAVATORIES AND SINKS

- 606.2 Clear Floor Space: a clear floor space... positioned for a forward approach, and knee and toe clearance... shall be provided.
- EXCEPTIONS: 1. A parallel approach... shall be permitted to a kitchen sink in a space where a cook top or conventional range is not provided and to wet bars.

- 606.3 Height: Lavatories and sinks shall be installed with the front of the rim or counter surface 34 inches (865 mm) maximum above the finish floor or ground.

- 606.5 Exposed Pipes and Surfaces: Water supply and drain pipes under lavatories and sinks shall be insulated or otherwise configured to protect against contact. There shall be no sharp or abrasive surfaces under lavatories and sinks.

- 60.3 Mirrors: Mirrors located above lavatories or countertops shall be installed with the bottom edge of the reflecting surface 40 inches (1015 mm) maximum above the finish floor or ground. Mirrors not located above lavatories or countertops shall be installed with the bottom edge of the reflecting surface 35 inches (890 mm) maximum above the finish floor or ground.

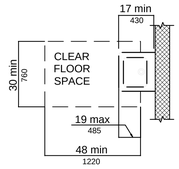

Clear Floor Space at Lavatories and Sinks

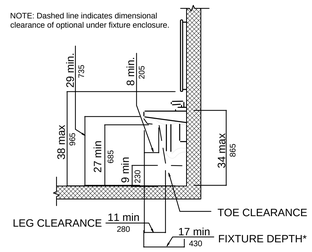

Leg Clearance at Lavatories and Sinks

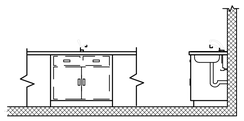

(a)
Before Removal of Cabinets and Base

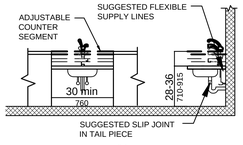

(b)
Cabinets and Base Removed and Height Alternatives

Kitchen Sink

NOTES FROM TEXT

TAS (2012) 602 DRINKING FOUNTAINS

- 602.6 Water Flow: The spout shall provided a flow of water 4 inches (100 mm) high minimum and shall be located 5 inches (125 mm) from the front of the unit.

- 602.7: Spout outlets of drinking fountains for standing persons shall be38 inches (965 mm) minimum and 43 inches (1090 mm) maximum above the finish floor or ground.

Figure 602.5
Drinking Fountain
Spout Location

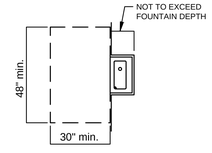

Built-In Fountain or Cooler

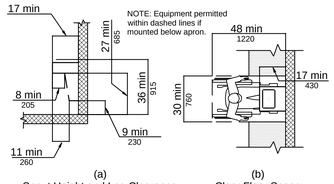

(a)
Spout Height and Leg Clearance

(b)
Clear Floor Space

Cantilevered Drinking Fountains and Water Coolers

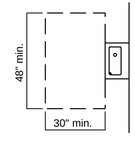

Freestanding Fountain or Cooler

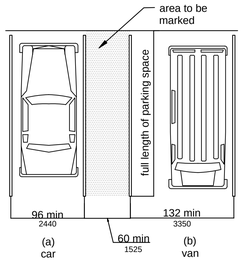

(a)
car

(b)
van

EXCEPTION: Van parking spaces shall be permitted to be 96 inches (2440 mm) wide minimum where the access aisle is 96 inches (2440 mm) wide minimum.

Figure 502.2 / 502.3
Vehicle Parking Spaces and Access Aisle

NOTES FROM TEXT

TAS (2012) 405.3 Cross Slope: Cross slope of ramp runs shall not be steeper than 1:48.

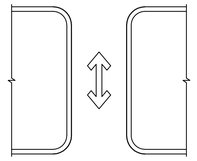

(a)
cut through at island

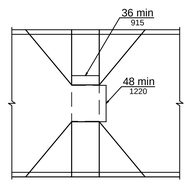

(b)
curb ramp at island

Figure 406.7 Islands in Crossings

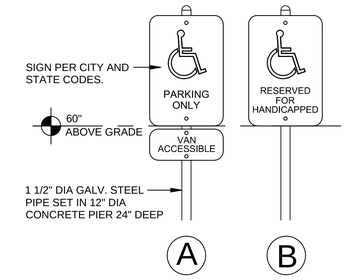

HANDICAP PARKING SIGNS

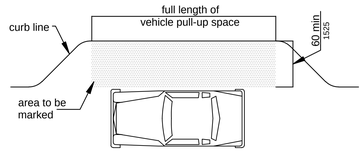

Figure 503.3 Passenger Loading Zone Access Aisle

Table 405.2 Maximum Ramp Slope and Rise for Existing Sites, Buildings, and Facilities

Slope[1]	Maximum Rise
Steeper than 1:10 but not steeper than 1:8	3 inches (75 mm)
Steeper than 1:12 but not steeper than 1:10	6 inches (150 mm)

1. A slope steeper than 1:8 is prohibited.

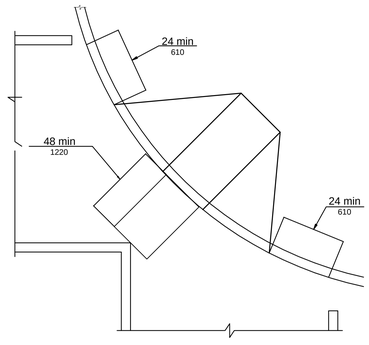

Figure 406.6 Diagonal or Corner Type Curb Ramps

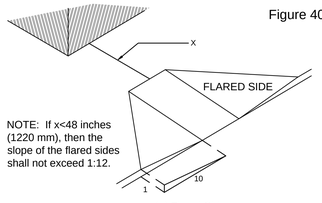

NOTE: If x<48 inches (1220 mm), then the slope of the flared sides shall not exceed 1:12.

(a) Flared Sides

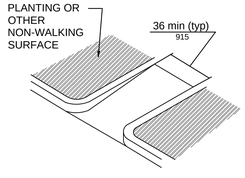

(b) Returned Curb

Sides of Curb Ramps

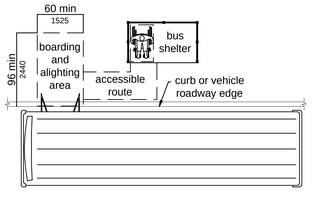

Figure 810.3 Bus Shelters

NOTES FROM TEXT

TAS (2012) 810.5.2 Detectable Warnings: Platform boarding edges not protected by platform screens or guards shall have detectable warnings... the full length of the public use area of the platform.

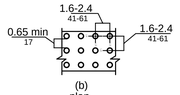

(b)
plan

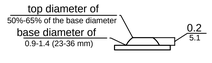

(a)
elevation
(enlarged)

Figure 705.1
Size and Spacing of Truncated Domes

HOUSTON AIRPORT SYSTEM

APPROVED

HOUSTON AIRPORT SYSTEM DIRECTOR OR DESIGNATED PDC REPRESENTATIVE — DATE

JACOBS

5985 Rogerdale Road
Houston, Texas
77072

P 832.351.6000
F 281.776.2501
W www.jacobs.com

TBPE Firm #2966

Seals:

THESE DOCUMENTS ARE FOR INTERIM REVIEW AND NOT FOR CONSTRUCTION, BIDDING OR PERMIT PURPOSES.

RESPONSIBLE ARCHITECT
CHRISTOPHER M. CASEY
24309
8-4-15

Project Client:
Houston Airport System
Project Address

Program Management Office

George Bush
Intercontinental Airport (IAH)

115 Standifer St.
Humble, TX 77338

Number	Description	Date
	95% REVIEW OF BRIDGING DOCUMENTS	21 MAY 2015
	100% BRIDGING DOCUMENTS	4 AUG 2015

Project No.:

Copyright: 2015 Jacobs Engineering

TDLR #:

Drawing Sheet Title:

ACCESSIBILITY
STANDARDS

Drawing Sheet Number:

G-012

Owner's Drawing Sheet No.:
-

GENERAL CONSTRUCTION NOTES:

1. THE CONTRACTOR SHALL COORDINATE HIS CONSTRUCTION SCHEDULE WITH ARCHITECT PRIOR TO COMMENCING WORK.

2. CONTRACTOR SHALL CONTACT ALL GOVERNING AGENCIES A MINIMUM OF 48 HOURS PRIOR TO CONSTRUCTION AND COORDINATE ALL WORK WITH THE SAME.

3. VERIFY ALL DIMENSIONS AND CONDITIONS IN THE FIELD BEFORE COMMENCING ANY WORK. IT SHALL BE THE CONTRACTOR'S RESPONSIBILITY TO REPORT ANY DISCREPANCIES TO THE ENGINEER IN A TIMELY MANNER.

4. ALL DIMENSIONS SHOWN ARE APPROXIMATE AND ARE TO BE VERIFIED BY THE CONTRACTOR. CHANGES IN HORIZONTAL OR VERTICAL ALIGNMENT ARE TO BE APPROVED BY THE ENGINEER.

5. THE DRAWINGS SHOW AS MUCH INFORMATION AS CAN BE REASONABLY OBTAINED FROM AN ON THE GROUND OBSERVATION, SURVEY AND EXISTING CONSTRUCTION DRAWINGS REGARDING THE TOPOGRAPHIC FEATURES, ELEVATION AS WELL AS THE LOCATION AND NATURE OF THE PIPELINES, NATURAL GAS LINES, UNDERGROUND CABLES, UTILITIES ETC. HOWEVER, THE ACCURACY OF OR COMPLETENESS OF SUCH INFORMATION IS NOT GUARANTEED. THE CONTRACTOR SHALL VERIFY THE LOCATION OF ALL UNDERGROUND UTILITIES NOT SHOWN ON THE DRAWINGS AND ENCOUNTERED DURING CONSTRUCTION. THE CONTRACTOR SHALL NOTIFY THE ENGINEER IMMEDIATELY IF CONFLICTS EXIST.

6. THE CONTRACTOR SHALL NOTIFY ALL UTILITY COMPANIES IN THE AREA A MINIMUM OF 48 HOURS PRIOR TO COMMENCING WORK AT ANY RIGHT-OF-WAY OR EXISTING EASEMENT. THE CONTRACTOR SHALL CONTACT THE UTILITY COORDINATING COMMITTEE AT (713) 223-4567, 1-800-245-4545 48 HOURS PRIOR TO COMMENCING CONSTRUCTION.

7. SOME OF THE UNDERGROUND UTILITIES SHOWN HEREON HAVE NOT BEEN FIELD VERIFIED.

8. CONTRACTOR SHALL UNCOVER EXISTING UTILITIES AT ALL "POINTS OF CROSSINGS" TO DETERMINE IF A CONFLICT EXISTS BEFORE COMMENCING ANY CONSTRUCTION. NOTIFY THE ENGINEER AT ONCE OF ANY CONFLICTS.

9. IN THE EVENT OF DAMAGE TO UNDERGROUND UTILITIES OR FACILITIES, WHETHER SHOWN OR NOT ON THE DRAWINGS, THE CONTRACTOR SHALL MAKE THE NECESSARY REPAIRS TO REPLACE THE UTILITY OR THE FACILITY BACK IN SERVICE AT NO INCREASE IN THE CONTRACT PRICE. ALL SUCH REPAIRS SHALL CONFORM TO THE REQUIREMENTS OF THE COMPANY OR AGENCY SERVICING THE FACILITY.

10. ALL EXISTING POWER POLES, LIGHT STANDARDS, SIGN, ETC. WHICH AFFECT THE PROPOSED CONSTRUCTION, SHALL BE REMOVED AND/OR RELOCATED AS REQUIRED WHETHER SHOWN ON THE DRAWINGS OR NOT AT NO ADDITIONAL COST TO THE OWNER.

11. ALL WORK WITHIN THE PUBLIC RIGHT-OF-WAY SHALL ADHERE TO THE STANDARDS OF THE GOVERNING AGENCY.

12. INGRESS AND EGRESS SHALL BE PROVIDED AT ALL TIMES FOR THE PROPERTY OWNERS AND THE BUSINESS OF THE ABUTTING PROPERTY AND THE CROSS STREETS WHICH ARE AFFECTED BY THE CONSTRUCTION OF THIS PROJECT.

13. THE CONTRACTOR SHALL BE FULLY RESPONSIBLE FOR MAINTAINING A SAFE PROJECT SITE 24 HOURS A DAY.

14. DURING THE ENTIRE CONSTRUCTION PERIOD, THE CONTRACTOR SHALL MAINTAIN CONSTRUCTION WARNING SIGNS AT EACH END OF THE PROJECT TO WARN MOTORING AND PEDESTRIAN TRAFFIC THAT CONSTRUCTION IS IN PROGRESS AND OF POSSIBLE HAZARDOUS CONDITIONS GENERATED BY THE CONSTRUCTION.

15. THE CONTRACTOR SHALL BE RESPONSIBLE FOR DELINEATING THE PERIMETER OF CONSTRUCTION WITH SAFETY FENCING AT NO ADDITIONAL COST. SAFETY FENCING SHALL BE ERECTED PRIOR TO CONSTRUCTION AND BE REMOVED UPON COMPLETION.

16. THE CONTRACTOR SHALL BE RESPONSIBLE FOR CONTROLLING TRAFFIC IN THE IMMEDIATE VICINITY OF CONSTRUCTION. ALL WORK SHALL BE IN SUCH A MANNER AND SEQUENCE AS TO PROVIDE MAXIMUM PROTECTION TO TRAFFIC AND PEDESTRIANS. CONTROL SHALL BE CONSISTENT WITH THE TYPE OF WORK BEING PERFORMED.

17. THE WORK AREA SHALL BE BARRICADED AND ILLUMINATED DURING DARKNESS AND PERIODS OF INACTIVITY, WHEN IN AN AREA OF DIRECT PUBLIC ACCESS.

18. UNOCCUPIED TRENCHES SHALL BE SECURED WITH SAFETY FENCING OR OTHER APPROPRIATE MEANS AT ALL TIMES. TRENCHES WHICH ARE NOT IMMEDIATELY BACKFILLED SHALL BE SECURELY COVERED OVERNIGHT AND BE SURROUNDED BY SAFETY FENCING.

19. THE CONTRACTOR SHALL BE RESPONSIBLE FOR PROVIDING REQUIRED SECURITY TO PROTECT HIS OWN PROPERTY, EQUIPMENT, AND WORK IN PROGRESS.

20. THE CONTRACTOR SHALL BE RESPONSIBLE FOR ENSURING THAT ADEQUATE DRAINAGE IS MAINTAINED AT ALL TIMES DURING CONSTRUCTION AND ANY DRAINAGE DITCH OR STRUCTURE DISTURBED DURING CONSTRUCTION SHALL BE RESTORED TO THE SATISFACTION OF THE GOVERNING AUTHORITY.

21. CONTRACTOR SHALL BE RESPONSIBLE FOR THE CONSTRUCTION OF ANY TEMPORARY DITCH OR DRAINAGE FACILITIES REQUIRED TO MAINTAIN ADEQUATE SITE DRAINAGE DURING CONSTRUCTION AT NO ADDITIONAL COST TO OWNER.

22. THE CONTRACTOR IS TO INSTALL GROUND WATER CONTROL FACILITIES IF NEEDED, AT NO ADDITIONAL COST TO OWNER.

23. THE CONTRACTOR SHALL BE RESPONSIBLE FOR OBTAINING ALL APPLICABLE PERMITS REQUIRED BY ALL GOVERNING AGENCIES.

24. THE CONTRACTOR IS RESPONSIBLE FOR THE COMPLETION AND SUBMISSION OF ALL APPLICABLE STATE AND FEDERAL FORMS REQUIRED FOR STORM WATER POLLUTION PREVENTION. THE CONTRACTOR SHALL BE RESPONSIBLE FOR CONSTRUCTION, IMPLEMENTATION, MAINTENANCE, AND INSPECTION OF STORM WATER POLLUTION PREVENTION CONTROL MEASURES INCLUDING, BUT NOT LIMITED TO, EROSION AND SEDIMENT CONTROLS, STORM WATER MANAGEMENT PLANS, WASTE COLLECTION AND DISPOSAL, OFF-SITE VEHICLE TRACKING, AND OTHER PRACTICES.

25. THE CONTRACTOR SHALL COMPLY WITH OSHA REGULATIONS AND STATE OF TEXAS LAW CONCERNING EXCAVATION, TRENCHING AND SHORING.

26. THE CONTRACTOR SHALL DESIGN AND PROVIDE A TRENCH SAFETY SYSTEM TO MEET THE APPROPRIATE REQUIREMENTS ESTABLISHED IN OCCUPATIONAL SAFETY AND HEALTH ADMINISTRATION (OSHA) SAFETY & HEALTH REGULATIONS,29 CFR 1926, SUBPART P- EXCAVATIONS, TRENCHING AND SHORING, AND OSHA'S PROPOSED STANDARDS ON TRENCHING, EXCAVATION PUBLISHED IN VOLUME 52, NO. 72 OF THE FEDERAL REGISTER, APRIL 15,1987, PAGES 12288-12339. SHOULD THE REFERENCED OSHA STANDARDS BE MODIFIED OR AMENDED, THE MORE STRINGENT REQUIREMENTS SHALL APPLY.

27. CONTRACTOR SHALL PROVIDE SHEETING, SHORING AND BRACING AS NECESSARY TO PROTECT WORKMEN AND EXISTING UTILITIES DURING ALL PHASES OF CONSTRUCTION.

28. IN ORDER TO COMPLY WITH HANDICAP REGULATIONS, THE CONTRACTOR SHALL ENSURE THAT THE SLOPE OF THE SIDEWALK AND AND/OR PAVING IN THE FIRST FIVE FEET OUTSIDE ANY DOOR DOES NOT EXCEED 2% IN ANY DIRECTION.

29. NO CONSTRUCTION WHICH BLOCKS THE TRAFFIC ON ANY STREET, ALLEY, OR DRIVEWAY WILL BE ALLOWED DURING THE HOURS OF 6:30 A.M.- 8:30 A.M. AND 2:30 P.M.-6:30 P.M.

30. THE CONTRACTOR MUST CLEAN MUD, DIRT OR DEBRIS TRACKED ONTO EXISTING STREETS BY HIMSELF OR SUBCONTRACTOR'S VEHICLES AND EQUIPMENT IN A TIMELY MANNER.

31. CONDITION OF THE ROAD AND/OR RIGHT-OF-WAY, UPON COMPLETION OF JOB SHALL BE AS GOOD OR BETTER THAN PRIOR TO STARTING WORK.

32. ALL AREAS DISTURBED BY CONSTRUCTION WHICH ARE NOT TO BE REPAVED OR OTHERWISE COVERED SHALL BE HYDROMULCHED.

33. CONTRACTOR SHALL STRIP AND STOCKPILE TOPSOIL. TOPSOIL SHALL BE SPREAD OVER ALL AREAS RECEIVING SOD AND OR HYDROMULCH. CONTRACTOR IS RESPONSIBLE FOR ESTABLISHING A STAND OF GRASS WITH NO AREAS OF EROSION BEFORE FINAL ACCEPTANCE.

34. THE CONTRACTOR SHALL BE RESPONSIBLE FOR THE REMOVAL AND DISPOSAL OF ALL WASTE MATERIAL GENERATED DURING CONSTRUCTION. WASTE MATERIAL MUST BE REMOVED FROM THE WORK SITE AND DISPOSED OF IN SUCH A MANNER AS TO NOT CAUSE ANY DAMAGE OR ADDITIONAL COST TO THE OWNER OR OTHER PERSONS.

35. ALL FILL PLACED ON SITE SHALL BE ENGINEERED FILL PER THE RECOMMENDATION OF THE SPECIFICATIONS.

36. FINISH GRADE ELEVATIONS INDICATE FINAL GRADE OF PROPOSED MATERIAL (I.E. SOD, DIRT, MULCH ETC.) LANDSCAPE AREAS ADJACENT TO BUILDING, INCLUDING, DIRT, MULCH AND/OR BEDDING MATERIALS SHALL NOT COVER WEEPHOLES. AREAS ADJACENT TO BUILDING, LANDSCAPED, OR OTHERWISE SHALL SHEET FLOW AWAY FROM BUILDING WITH NO AREAS OF STANDING WATER ADJACENT TO BUILDING.

37. GRADING AROUND BUILDINGS INCLUDING WALKWAYS SHALL BE COORDINATED WITH THE ENGINEER AND FINAL APPROVAL OF GRADES IN GRASS AREAS AND SWALES SHALL BE APPROVED BY ENGINEER PRIOR TO INSTALLATION OF LANDSCAPING MATERIAL.

38. AFTER INSTALLATION OF DRAINAGE SYSTEM, CONTRACTOR SHALL PERFORM FINAL GRADING AS SHOWN ON THE PLANS AND/OR AS DIRECTED BY ENGINEER OR OWNER TO INSURE POSITIVE DRAINAGE OF ENTIRE SITE. FINAL GRADING SHALL BE APPROVED BY ENGINEER PRIOR TO INSTALLATION OF GRASS.

39. CONTRACTOR IS RESPONSIBLE FOR ESTABLISHING FINAL GRADES TO ENSURE POSITIVE DRAINAGE.

40. ALL STRUCTURES AND SEWER PIPE UNDER OR WITHIN TWO (2) FEET OF PROPOSED OR FUTURE PAVEMENT SHALL BE BEDDED AND BACKFILLED WITH CEMENT STABILIZED SAND UP TO THE BOTTOM OF THE PAVEMENT SUBGRADE.

41. CEMENT-SAND BACKFILL SHALL CONSIST OF NOT LESS THAN 1-1/2 SACKS OF CEMENT PER TON OF SAND WITH SUFFICIENT WATER TO HYDRATE THE CEMENT. THE MATERIAL SHALL BE PLACED IN LAYERS EIGHT(8) INCHES THICK MAXIMUM AND COMPACTED TO 95% STANDARD PROCTOR DENSITY.

42. CONCRETE SHALL HAVE MINIMUM OF FIVE AND ONE-HALF SACKS OF CEMENT PER CUBIC YARD AND SHALL HAVE A MINIMUM COMPRESSIVE STRENGTH OF 3500 PSI AT 28 DAYS.

43. ALL STEEL REINFORCEMENT SHALL CONFORM TO ASTM A615 GRADE 60.

44. DETAILING AND FABRICATION OF CONCRETE REINFORCEMENT AND ACCESSORIES SHALL BE IN ACCORDANCE WITH ACI-318 LATEST EDITION.

45. LAP ALL CONTINUOUS REINFORCING STEEL 36 DIAMETERS AT SPLICES, TEES, AND CORNERS UNLESS NOTED OTHERWISE ON PLANS.

46. A FIBERBOARD EXPANSION JOINT SHALL BE PLACED BETWEEN THE BUILDING FOUNDATION AND THE CONCRETE PAVEMENT.

47. THE CONTRACTOR SHALL VERIFY LOCATION AND ELEVATION OF ALL PROPOSED UTILITIES TO EXISTING BUILDING PRIOR TO COMMENCING WORK ON SITE UTILITIES. UPON ANY DISCREPANCIES, ENGINEER IS TO BE NOTIFIED.

48. ALL EXISTING STORM SEWER MANHOLES OR STRUCTURES ON SITE SHALL BE ADJUSTED TO FINISH GRADE.

49. CONTRACTOR SHALL TAKE NECESSARY PRECAUTIONS TO PROTECT ROOT SYSTEMS OF SHRUBS, PLANTS AND TREES ALONG THE AREA OF EXCAVATION.

STORM SEWER CONSTRUCTION NOTES

1. ON SITE STORM SEWERS 10-INCH DIAMETER AND LESS SHALL BE HDPE (HIGH DENSITY POLYETHYLENE) PIPE MEETING AASHTO M252 & 12-INCH TO 24-INCH DIAMETER SHALL BE HDPE PIPE MEETING AASHTO M294 SPECIFICATIONS.

2. ANY CONCRETE PIPE USED ON THIS PROJECT SHALL BE REINFORCED CONCRETE MEETING ASTM C-76 CLASS III, AND HAVE BELL AND SPIGOT JOINTS WITH RUBBER GASKETS. CONCRETE PIPE IS ONLY TO BE USED WHERE REQUIRED IN PUBLIC RIGHT-OF-WAY AND/OR AT TIES TO PUBLIC STORM SEWER SYSTEMS. BEDDING BACKFILLING AND INSTALLATION OF PIPE AND CONSTRUCTION OF APPURTENANCES SHALL BE IN ACCORDANCE WITH THE CIVIL SHEET DETAILS.

3. THE CONTRACTOR SHALL USE PRECAST STORM SEWER MANHOLES AND INLETS. INLET BOTTOM SHALL BE FILLED WITH CONCRETE AND SLOPED TO INSURE POSITIVE DRAINAGE FROM INLET TO STORM SEWER LINE WITH NO STANDING WATER IN INLET. BRICK MANHOLES AND/OR INLETS MAY BE USED AS APPROVED BY THE ENGINEER WHEN SETTING STRUCTURES ON EXISTING UTILITY LINE. BRICK STRUCTURES MUST BE MORTARED INSIDE AND OUT. COORDINATE EACH INCIDENT WITH ENGINEER.

4. ALL INLETS, MANHOLES, CLEANOUTS, AND HEADWALLS SHALL BE BACKFILLED WITH CEMENT STABILIZED SAND. CEMENT STABILIZED SAND FILL SHALL BE AT LEAST 12" ON BOTTOM OF STRUCTURE AND 12" AROUND OUTSIDE OF STRUCTURE.

5. NO CORNER CONNECTIONS WILL BE ALLOWED TO ANY INLETS, JUNCTION BOXES OR BOX MANHOLES.

6. CONTRACTOR SHALL CUT OFF PIPE FLUSH WITH INSIDE FACE OF INLETS AND MANHOLES.

7. CONCRETE FOR DRAINAGE STRUCTURE SHALL HAVE A MINIMUM COMPRESSIVE STRENGTH OF 4500 PSI AT 28 DAYS.

8. CULVERTS LARGER THAN SINGLE 30-INCH DIAMETER (OR LARGER THAN MULTIPLE 24-INCH DIAMETER CULVERTS) SHALL REQUIRE SAFETY END TREATMENTS (SETs).

9. CONTRACTOR SHALL FLUSH AND CLEAN ALL STORM SEWER LINES AND STRUCTURES PRIOR TO ACCEPTANCE. ALL STORM LINES SHALL ALSO BE INSPECTED VIA CAMERA.

10. TIE-INS TO EXISTING MANHOLES SHALL BE MADE SUCH THAT THE FINAL CONDITIONS UPON COMPLETION OF THE JOB SHALL BE AS GOOD OR BETTER THAN PRIOR TO STARTING WORK.

SANITARY SEWER CONSTRUCTION NOTES

1. SANITARY SEWER SHALL BE PVC (POLY-VINYL CHLORIDE) PIPE MEETING A.S.T.M. SPECIFICATION, D1785 UNLESS OTHERWISE SHOWN ON PLANS. BEDDING BACKFILLING AND INSTALLATION OF PIPE AND CONSTRUCTION OF APPURTENCES SHALL BE IN ACCORDANCE WITH THE CIVIL DETAIL SHEETS.

2. THE CONTRACTOR SHALL USE PRECAST SANITARY SEWER MANHOLES.

3. ALL MANHOLES AND CLEANOUTS SHALL BE BACKFILLED WITH CEMENT STABILIZED SAND. CEMENT STABILIZED SAND FILL SHALL BE AT LEAST 12" ON BOTTOM OF STRUCTURE AND 12" AROUND OUTSIDE OF STRUCTURE.

4. CONTRACTOR SHALL CUT OFF PIPE FLUSH WITH INSIDE FACE OF MANHOLES.

5. CONTRACTOR SHALL SEAL INTERIOR SURFACE OF PROPOSED SANITARY SEWER MANHOLES WITH RAVEN LINER 405, OR APPROVED EQUAL AS PER MANUFACTURER'S SPECIFICATIONS.

6. ALL SANITARY SEWER SHALL BE VACUUM TESTED.

7. ALL SANITARY SEWER LINES SHALL BE MANDREL AND AIR TESTED. ALL SANITARY SEWER LINES SHALL ALSO BE INSPECTED VIA CAMERA.

8. UTILITIES ARE TO BE TAKEN TO WITHIN FIVE (5) FEET OF BUILDING. SEE PLUMBING SHEETS FOR CONTINUATION OF SERVICE CONNECTIONS INTO BUILDINGS.

9. TIE-INS TO EXISTING MANHOLES SHALL BE MADE SUCH THAT THE FINAL CONDITIONS UPON COMPLETION OF THE JOB SHALL BE AS GOOD OR BETTER THAN PRIOR TO STARTING WORK.

10. THE CONTRACTOR IS TO INSTALL WATER-TIGHT ADAPTORS OF A TYPE COMPATIBLE WITH THE MATERIALS BEING JOINED AT THE POINT OF CONNECTION OF THE SERVICE LINE TO THE BUILDING PLUMBING. NO CEMENT GROUT MATERIAL ARE PERMITTED.

11. THE CONTRACTOR IS TO INSTALL EACH CLEANOUT SO THAT IT OPENS IN A DIRECTION OPPOSITE TO THE FLOW OF THE WASTE AND, EXCEPT IN CASE OF "WYE" BRANCH AND END-OF-THE-LINE CLEANOUTS, CLEANOUTS WILL BE INSTALLED VERTICALLY ABOVE THE FLOW LINE OF THE PIPE. CLEANOUT WILL BE MADE WITH AIR-TIGHT MECHANICAL PLUG.

WATER LINE CONSTRUCTION NOTES

1. DOMESTIC OR FIRE WATER LINES 3" AND LARGER SHALL BE POLYVINYL CHLORIDE (PVC), SCHEDULE 80, CONFORMING TO AWWA C900 OR C905, AS CURRENTLY AMENDED UNLESS OTHERWISE NOTED ON THE PLANS.

2. ALL VALVES SHALL BE LEFT HAND (COUNTERCLOCKWISE) OPEN.

3. SEE DETAIL SHEET FOR THRUST BLOCK DETAILS.

4. CONTRACTOR SHALL INSTALL METALLIC TRACER WIRE ON ALL UNDERGROUND PVC PIPING AND SECURE WIRE ENDS AT ALL VALVE BOXES.

5. CONTRACTOR SHALL ADJUST ELEVATION OF WATER LINES REQUIRED TO CLEAR OTHER UTILITIES. ADJUSTMENT MUST MEET TCEQ REQUIREMENTS FOR MINIMUM CLEARANCES, TYPE OF PIPE, ETC.

6. MINIMUM VERTICAL CLEARANCE BETWEEN WATER LINES AND OTHER UTILITIES SHALL BE TWELVE INCHES, UNLESS OTHERWISE NOTED ON THE PLANS.

7. EXISTING WATER SERVICES SHALL NOT BE INTERRUPTED DURING CONSTRUCTION.

8. NO CONNECTIONS SHALL BE MADE TO EXISTING WATERLINES UNTIL ALL PROPOSED WATER LINES HAVE BEEN THOROUGHLY CLEANED, TESTED, DISINFECTED AND APPROVED. ALL TESTING PROCEDURES SHALL CONFORM TO THE GOVERNING AGENCY.

9. UTILITIES ARE TO BE TAKEN WITHIN FIVE (5) FEET OF BUILDING. SEE PLUMBING SHEETS FOR CONTINUATION OF SERVICE CONNECTIONS INTO BUILDING.

HOUSTON AIRPORT SYSTEM

APPROVED

HOUSTON AIRPORT SYSTEM DIRECTOR OR DESIGNATED PDC REPRESENTATIVE — DATE

JACOBS

5985 Rogerdale Road
Houston, Texas
77072

P 832.351.6000
F 281.776.2501
W www.jacobs.com

TBPE Firm #2966

iSani CONSULTANTS

3143 YELLOWSTONE BLVD
HOUSTON, TX 77054
TEL: (713) 747-2399 FAX: (713) 748-3748
TBPE FIRM REG. No. F-4575

Seals:

INTERIM REVIEW ONLY
DOCUMENT INCOMPLETE: NOT INTENDED FOR PERMIT, BIDDING OR CONSTRUCTION.
ENGINEER: VINCENT N. JACOB
P.E. SERIAL NO.: 98325
DATE: 08-04-2015

Project Client:
Houston Airport System
Project Address

Program Management Office

George Bush
Intercontinental Airport (IAH)

115 Standifer St.
Humble, TX 77338

Number	Description	Date
	95% REVIEW OF BRIDGING DOCS	21 MAY 2015
	100% BRIDGING DOCUMENTS	4 AUG 2015

Project No.:

Copyright: 2015 Jacobs Engineering

TDLR #:

Drawing Sheet Title:

GENERAL NOTES

Drawing Sheet Number:

C0.01

Owner's Drawing Sheet No.:

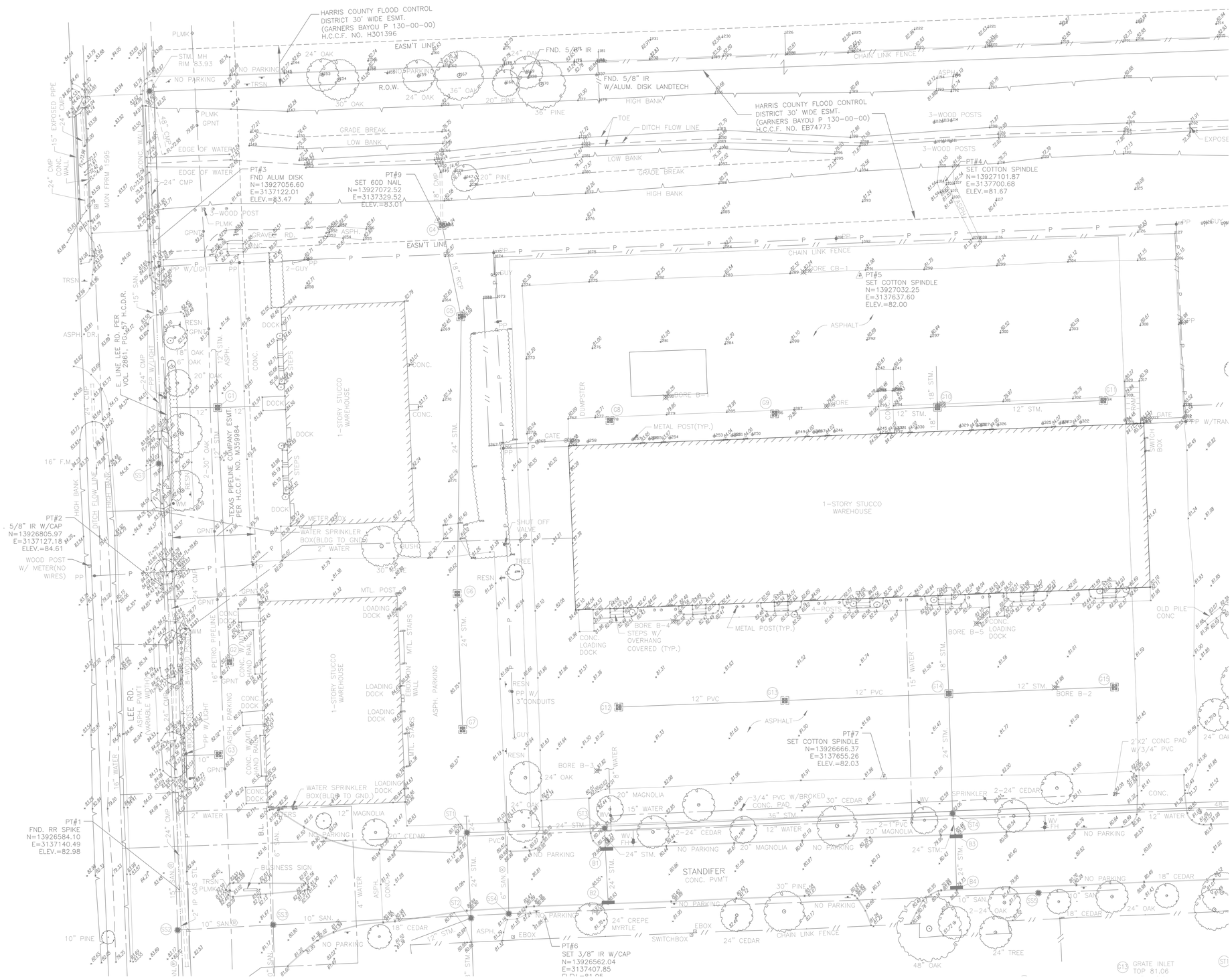

HOUSTON AIRPORT SYSTEM

APPROVED

HOUSTON AIRPORT SYSTEM DIRECTOR OR DESIGNATED PDC REPRESENTATIVE	DATE

JACOBS

5985 Rogerdale Road
Houston, Texas
77072

P 832.351.6000
F 281.776.2501
W www.jacobs.com

TBPE Firm #2966

iSani CONSULTANTS

3143 YELLOWSTONE BLVD
HOUSTON, TX 77054
TEL: (713) 747-2399 FAX: (713) 748-3748
TBPE FIRM REG. No. F-4575

Seals:

INTERIM REVIEW ONLY
DOCUMENT INCOMPLETE: NOT INTENDED FOR PERMIT, BIDDING OR CONSTRUCTION.
ENGINEER: VINCENT N. JACOB
P.E. SERIAL NO.: 98325
DATE: 08-04-2015

15 0 7.5 15 30
SCALE: 1" = 30'-0"

LEGEND:

	MB	MAILBOX
	PP	POWER POLE
	GUY	DOWN GUY
	STLT	STREET LIGHT
	TRSN	TRAFFIC SIGN
	RESN	RESERVED SIGN
	FH	FIRE HYDRANT
	WV	WATER VALVE
	WM	WATER METER
		GRATE INLET
		TYPE "BB" INLET
	MH	MANHOLE
	PLMK	PIPELINE MARKER
	GPNT	GAS PAINT MARKER
	MTPL	METER POLE
	EBOX	ELECTRIC BOX
		BUSH

NOTES:

1. ALL COORDINATES ARE REFERENCED TO THE TEXAS COORDINATE SYSTEM OF 1983, SOUTH CENTRAL ZONE, NAD 83 (2011), EPOCH 2010.00. NGS MONUMENT "ZHU B", PRIMARY AIRPORT CONTROL STATION WAS HELD FOR PROJECT CONTROL. HORIZONTAL CONTROL SURVEY WAS PERFORMED USING GPS AND THE GEOID 12A MODEL. NGS GRID COORDINATES: N=13,912,033.65; E=3,129,527.22. UNIT OF MEASURE = U. S. SURVEY FOOT.

2. ALL COORDINATES SHOWN HEREON HAVE BEEN SCALED UP TO SURFACE VALUES USING A SURFACE ADJUSTMENT FACTOR OF 0.999923616683. TO CONVERT TO GRID COORDINATES USE THE FOLLOWING FORMULA: SURFACE X 0.999923616683 = GRID.

3. ALL ELEVATIONS ARE REFERENCED TO NAVD 88, 2001 ADJUSTMENT. HARRIS COUNTY FLOOD PLAIN REFERENCE MARK 150495 WAS HELD FOR PROJECT CONTROL. VERTICAL CONTROL SURVEY WAS PERFORMED USING GPS AND CLOSED LEVEL LOOP PROCEDURE. ELEV.=83.45

Project Client:
Houston Airport System
Project Address

Program Management Office

George Bush Intercontinental Airport (IAH)

115 Standifer St.
Humble, TX 77338

Number	Description	Date
	95% REVIEW OF BRIDGING DOCS	21 MAY 2015
	100% BRIDGING DOCUMENTS	4 AUG 2015

Project No.:

Copyright: 2015 Jacobs Engineering

TDLR #:

Drawing Sheet Title:

EXISTING CONDITIONS

Drawing Sheet Number:

C0.02

Owner's Drawing Sheet No.:

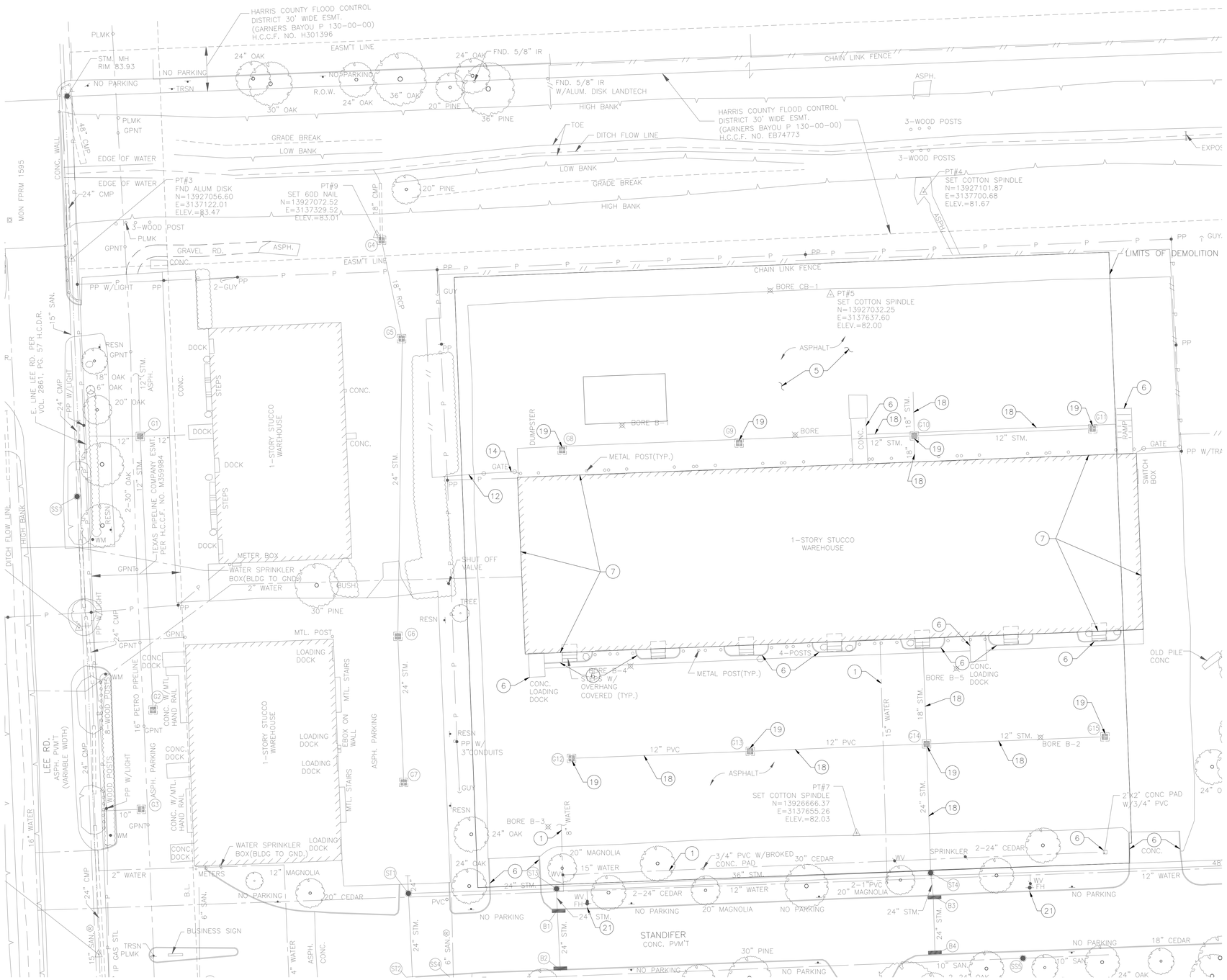

LEGEND:

	MB	MAILBOX
	PP	POWER POLE
	GUY	DOWN GUY
	STLT	STREET LIGHT
	TRSN	TRAFFIC SIGN
	RESN	RESERVED SIGN
	FH	FIRE HYDRANT
	WV	WATER VALVE
	WM	WATER METER
		GRATE INLET
		TYPE 'BB' INLET
	MH	MANHOLE
	PLMK	PIPELINE MARKER
	GPNT	GAS PAINT MARKER
	MTPL	METER POLE
	EBOX	ELECTRIC BOX
		BUSH

DEMOTION LEGEND:

1. REMOVE EXISTING WATER LINES
2. PLUG EXISTING WATER LINES
3. REMOVE & SALVAGE EXISTING FIRE HYDRANT
4. REMOVE EXISTING POWER POLE, GUY WIRE AND POWER LINES
5. REMOVE EXISTING ASPHALT PAVEMENT, DRIVEWAY
6. REMOVE EXISTING CONCRETE PAVEMENT, SIDEWALK, DRIVEWAY CURB
7. REMOVE EXISTING BUILDING (SEE NOTE NO. 1)
8. EXISTING SANITARY SEWER & MANHOLE TO REMAIN
9. EXISTING ASPHALT PAVEMENT TO REMIAN
10. REMOVE EXISTING WATER METER
11. REMOVE EXISTING CULVERT
12. REMOVE FENCE
13. REMOVE GRAVEL ROAD
14. REMOVE GATE AND GATE OPERATOR
15. ELECTRICAL JUNCTION BOX AND FOC TO REMAIN
16. TREE TO REMAIN
17. FENCE TO REMAIN
18. REMOVE EXISTING STORM SEWER
19. REMOVE EXISTING STORM INLETS AND MANHOLE
20. REMOVE EXISTING SANITARY SEWER
21. EXISTING FIRE HYDRANT TO REMAIN

NOTE:

1. REMOVAL OF BUILDING TO BE SUBJECT TO ASBESTOS AND LEAD BASED PAINT ABATEMENT IF REQUIRED.

HOUSTON AIRPORT SYSTEM

APPROVED

HOUSTON AIRPORT SYSTEM DIRECTOR OR DESIGNATED PDC REPRESENTATIVE — DATE

JACOBS

5985 Rogerdale Road
Houston, Texas
77072

P 832.351.6000
F 281.776.2501
W www.jacobs.com

TBPE Firm #2966

iSani CONSULTANTS

3143 YELLOWSTONE BLVD
HOUSTON, TX 77054
TEL: (713) 747-2399 FAX: (713) 748-3748
TBPE FIRM REG. No. F-4575

Seals:

INTERIM REVIEW ONLY
DOCUMENT INCOMPLETE: NOT INTENDED FOR PERMIT, BIDDING OR CONSTRUCTION.
ENGINEER: VINCENT N. JACOB
P.E. SERIAL NO.: 98325
DATE: 08-04-2015

Project Client:
Houston Airport System
Project Address

Program Management Office

George Bush Intercontinental Airport (IAH)

115 Standifer St.
Humble, TX 77338

Number	Description	Date
	95% REVIEW OF BRIDGING DOCS	21 MAY 2015
	100% BRIDGING DOCUMENTS	4 AUG 2015

Project No.:

Copyright: 2015 Jacobs Engineering

TDLR #:

Drawing Sheet Title:

DEMOLITION PLAN

Drawing Sheet Number:

C1.00

Owner's Drawing Sheet No.:

EXISTING IMPERVIOUS		
SUMMARY	SF	ACRES
PERMANENT BLDG	50,426	1.16
PARKINGS	121,281	2.78
TOTAL	171707	3.94

PROPOSED IMPERVIOUS		
SUMMARY	SF	ACRES
PERMANENT BLDG	43,091	0.99
PARKING & SIDEWALKS	93,693	2.15
TOTAL	136,784	3.14

50 0 25 50 100

SCALE: 1" = 50'-0"

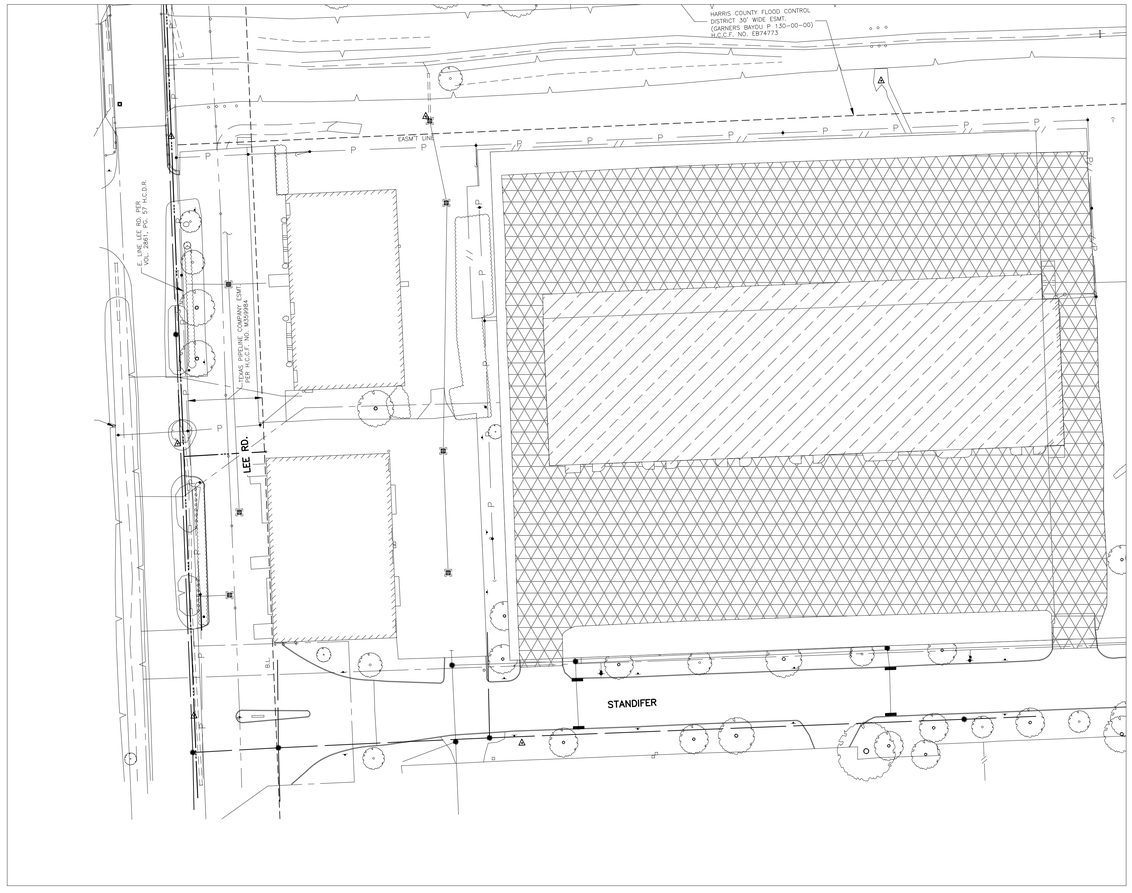

EXISTING IMPERVIOUS

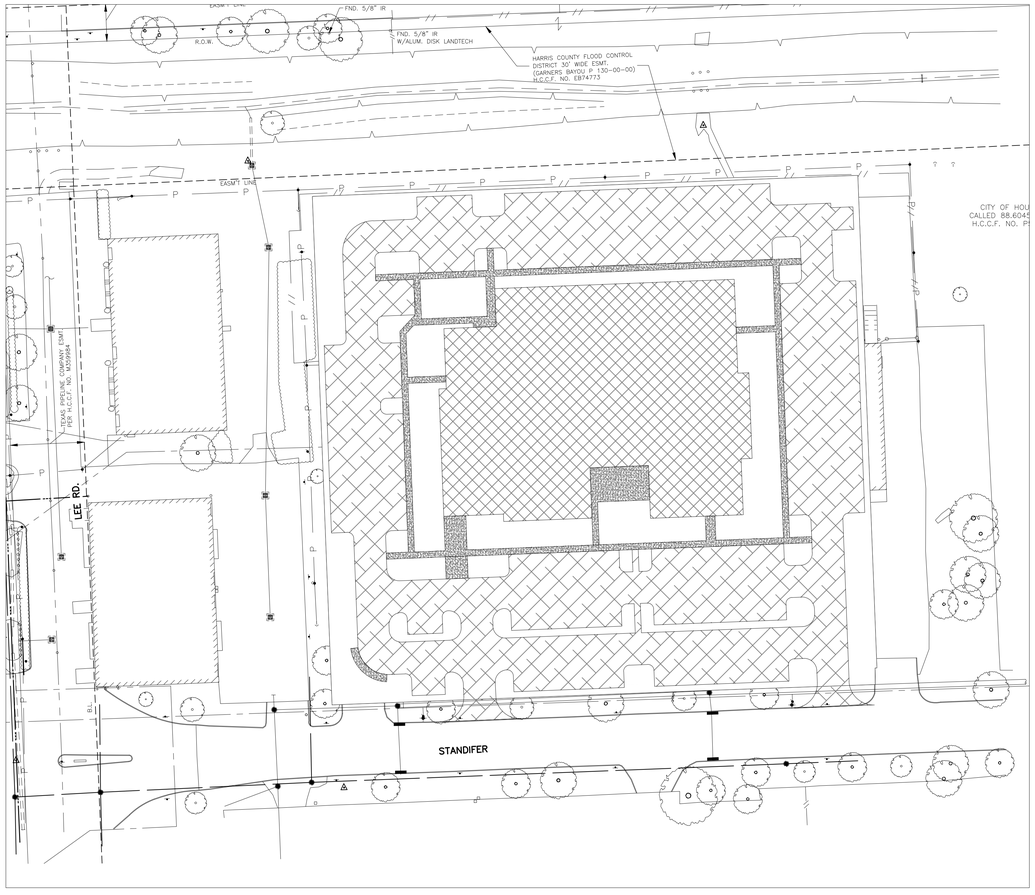

PROPOSED IMPERVIOUS

LEGEND:

○	MB	MAILBOX
●	PP	POWER POLE
⟵	GUY	DOWN GUY
○	STLT	STREET LIGHT
◄	TRSN	TRAFFIC SIGN
◄	RESN	RESERVED SIGN
●	FH	FIRE HYDRANT
●	WV	WATER VALVE
●	WM	WATER METER
▦		GRATE INLET
▬		TYPE "BB" INLET
●	MH	MANHOLE
◇	PLMK	PIPELINE MARKER
○	GPNT	GAS PAINT MARKER
○	MTPL	METER POLE
□	EBOX	ELECTRIC BOX
⬭		BUSH

EXISTING LEGEND

- IMPERVIOUS BUILDING
- IMPERVIOUS PAVEMENT

PROPOSED LEGEND

- IMPERVIOUS BUILDING
- IMPERVIOUS PAVEMENT
- IMPERVIOUS SIDEWALK

HOUSTON AIRPORT SYSTEM

APPROVED

HOUSTON AIRPORT SYSTEM DIRECTOR OR DESIGNATED PDC REPRESENTATIVE — DATE

JACOBS

5985 Rogerdale Road
Houston, Texas
77072

P 832.351.6000
F 281.776.2501
W www.jacobs.com

TBPE Firm #2966

iSani CONSULTANTS
3143 YELLOWSTONE BLVD
HOUSTON, TX 77054
TEL: (713) 747-2399 FAX: (713) 748-3748
TBPE FIRM REG. No. F-4575

Seals:

INTERIM REVIEW ONLY
DOCUMENT INCOMPLETE: NOT INTENDED FOR PERMIT, BIDDING OR CONSTRUCTION.
ENGINEER: VINCENT N. JACOB
P.E. SERIAL NO.: 98325
DATE: 08-04-2015

Project Client:
Houston Airport System
Project Address

Program Management Office

George Bush Intercontinental Airport (IAH)

115 Standifer St.
Humble, TX 77338

Number	Description	Date
	95% REVIEW OF BRIDGING DOCS	21 MAY 2015
	100% BRIDGING DOCUMENTS	4 AUG 2015

Project No.:

Copyright: 2015 Jacobs Engineering

TDLR #:

Drawing Sheet Title:

IMPERVIOUS PLAN

Drawing Sheet Number:

C2.00

Owner's Drawing Sheet No.:

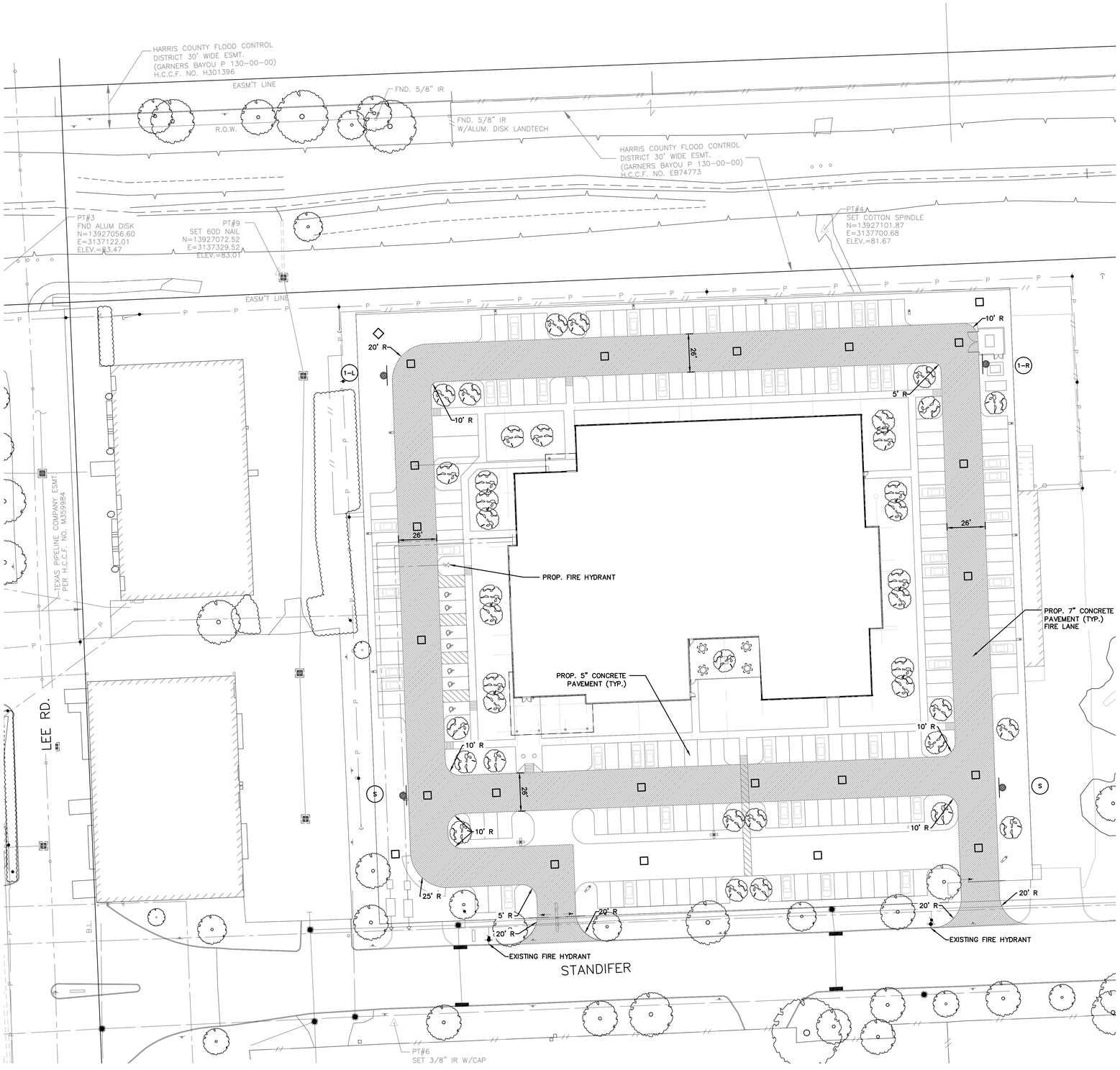

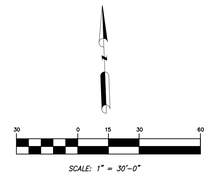

LEGEND:

○	MB	MAILBOX
●	PP	POWER POLE
	GUY	DOWN GUY
○	STLT	STREET LIGHT
	TRSN	TRAFFIC SIGN
	RESN	RESERVED SIGN
●	FH	FIRE HYDRANT
●	WV	WATER VALVE
●	WM	WATER METER
		GRATE INLET
		TYPE 'BB' INLET
●	MH	MANHOLE
◇	PLMK	PIPELINE MARKER
○	GPNT	GAS PAINT MARKER
○	MTPL	METER POLE
□	EBOX	ELECTRIC BOX
		BUSH

1-L

1-R

S

PROPOSED LEGEND

FIRE LANE

HOUSTON AIRPORT SYSTEM

APPROVED

HOUSTON AIRPORT SYSTEM
DIRECTOR OR DESIGNATED
PDC REPRESENTATIVE

DATE

JACOBS

5985 Rogerdale Road
Houston, Texas
77072

P 832.351.6000
F 281.776.2501
W www.jacobs.com

TBPE Firm #2966

iSani CONSULTANTS

3143 YELLOWSTONE BLVD
HOUSTON, TX 77054
TEL: (713) 747-2399 FAX: (713) 748-3748
TBPE FIRM REG. No. F-4575

Seals:

INTERIM REVIEW ONLY
DOCUMENT INCOMPLETE; NOT INTENDED FOR PERMIT, BIDDING OR CONSTRUCTION.
ENGINEER: VINCENT N JACOB
P.E. SERIAL NO.: 98325
DATE: 08-04-2015

Project Client:

Houston Airport System

Project Address

Program Management Office

George Bush
Intercontinental Airport (IAH)

115 Standifer St.
Humble, TX 77338

Number	Description	Date
	95% REVIEW OF BRIDGING DOCS	21 MAY 2015
	100% BRIDGING DOCUMENTS	4 AUG 2015

Project No.:

Copyright: 2015 Jacobs Engineering

TDLR #:

Drawing Sheet Title:

FIRE LANE PLAN

Drawing Sheet Number:

C2.01

Owner's Drawing Sheet No.:

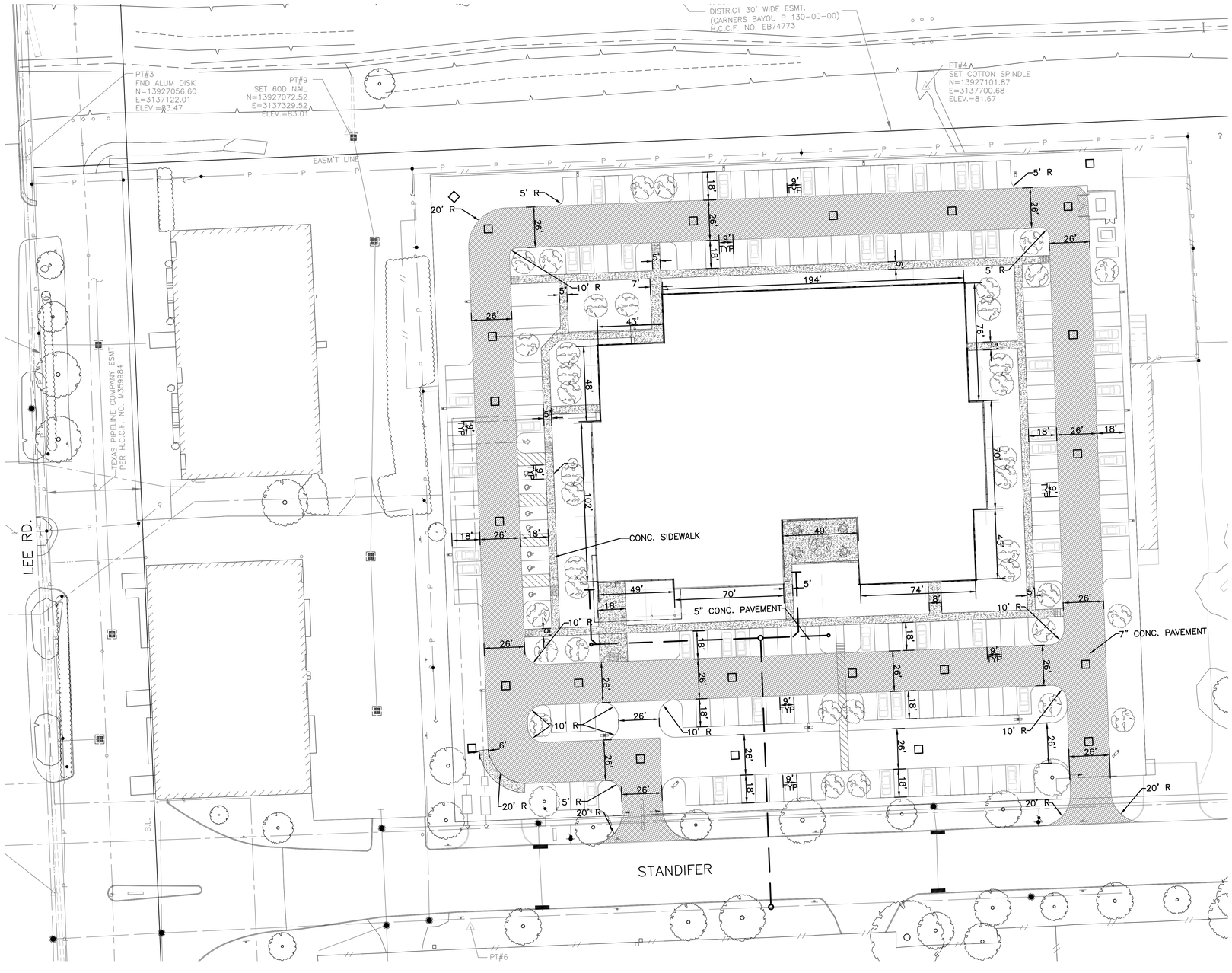

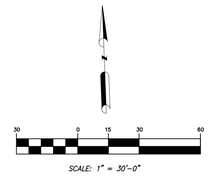

LEGEND:

○	MB	MAILBOX
	PP	POWER POLE
	GUY	DOWN GUY
○	STLT	STREET LIGHT
	TRSN	TRAFFIC SIGN
	RESN	RESERVED SIGN
	FH	FIRE HYDRANT
	WV	WATER VALVE
	WM	WATER METER
		GRATE INLET
		TYPE 'BB' INLET
	MH	MANHOLE
◇	PLMK	PIPELINE MARKER
○	GPNT	GAS PAINT MARKER
	MTPL	METER POLE
□	EBOX	ELECTRIC BOX
		BUSH

HOUSTON AIRPORT SYSTEM

APPROVED

HOUSTON AIRPORT SYSTEM
DIRECTOR OR DESIGNATED
PDC REPRESENTATIVE

DATE

JACOBS

5985 Rogerdale Road
Houston, Texas
77072

P 832.351.6000
F 281.776.2501
W www.jacobs.com

TBPE Firm #2966

iSani CONSULTANTS

3143 YELLOWSTONE BLVD
HOUSTON, TX 77054
TEL: (713) 747-2399 FAX: (713) 748-3748
TBPE FIRM REG. No. F-4575

Seals:

INTERIM REVIEW ONLY
DOCUMENT INCOMPLETE:
NOT INTENDED FOR PERMIT, BIDDING OR CONSTRUCTION.
ENGINEER: VINCENT N. JACOB
P.E. SERIAL NO.: 98325
DATE: 08-04-2015

Project Client:
Houston Airport System
Project Address

Program Management Office

George Bush
Intercontinental Airport (IAH)

115 Standifer St.
Humble, TX 77338

Number	Description	Date
	95% REVIEW OF BRIDGING DOCS	21 MAY 2015
	100% BRIDGING DOCUMENTS	4 AUG 2015

Project No.:

Copyright: 2015 Jacobs Engineering

TDLR #:

Drawing Sheet Title:

DIMENSIONAL LAYOUT PLAN

Drawing Sheet Number:

C2.02

Owner's Drawing Sheet No.:

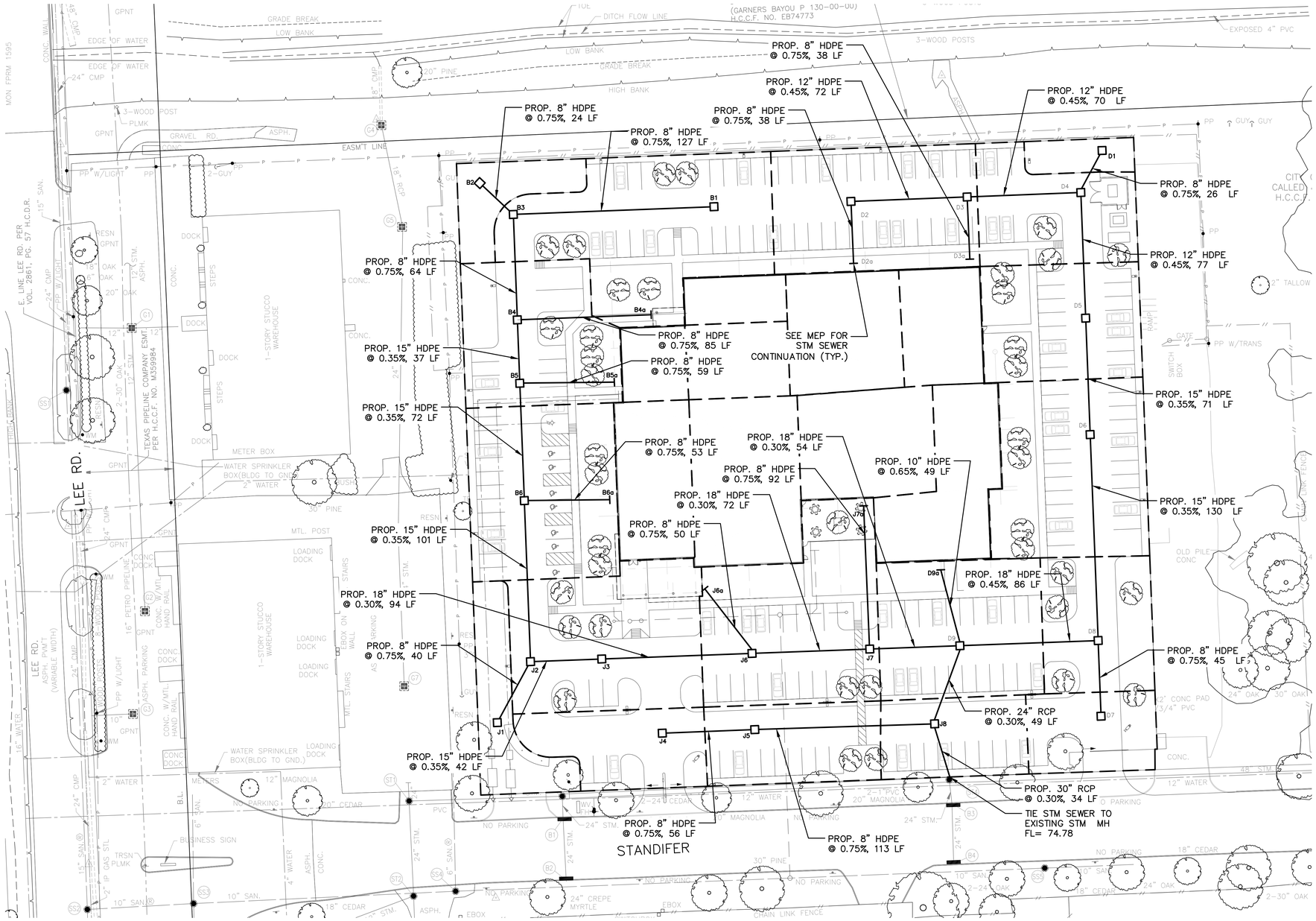

LEGEND:

○	MB	MAILBOX
●	PP	POWER POLE
(—	GUY	DOWN GUY
○	STLT	STREET LIGHT
◄	TRSN	TRAFFIC SIGN
▲	RESN	RESERVED SIGN
●	FH	FIRE HYDRANT
●	WV	WATER VALVE
●	WM	WATER METER
▦		GRATE INLET
▬		TYPE 'BB' INLET
●	MH	MANHOLE
◇	PLMK	PIPELINE MARKER
○	GPNT	GAS PAINT MARKER
○	MTPL	METER POLE
□	EBOX	ELECTRIC BOX
⬡		BUSH

PROPOSED LEGEND

┌ ─ ─ ┐	DRAINAGE BOUNDARY
———	STORM SEWER
A1	DRAINAGE STRUCTURE ID
□	TYPE A INLET
▭	B-B INLET

HOUSTON AIRPORT SYSTEM

APPROVED

HOUSTON AIRPORT SYSTEM DIRECTOR OR DESIGNATED PDC REPRESENTATIVE — DATE

JACOBS

5985 Rogerdale Road
Houston, Texas
77072

P 832.351.6000
F 281.776.2501
W www.jacobs.com

TBPE Firm #2966

iSani CONSULTANTS
3143 YELLOWSTONE BLVD
HOUSTON, TX 77054
TEL: (713) 747-2399 FAX: (713) 748-3748
TBPE FIRM REG. No. F-4575

Seals:

INTERIM REVIEW ONLY
DOCUMENT INCOMPLETE; NOT INTENDED FOR PERMIT, BIDDING OR CONSTRUCTION.
ENGINEER: VINCENT N. JACOB
P.E. SERIAL NO.: 98325
DATE: 08-04-2015

Project Client:
Houston Airport System
Project Address

Program Management Office

George Bush
Intercontinental Airport (IAH)

115 Standifer St.
Humble, TX 77338

Number	Description	Date
	95% REVIEW OF BRIDGING DOCS	21 MAY 2015
	100% BRIDGING DOCUMENTS	4 AUG 2015

Project No.:

Copyright: 2015 Jacobs Engineering

TDLR #:

Drawing Sheet Title:

DRAINAGE PLAN

Drawing Sheet Number:

C3.00

Owner's Drawing Sheet No.:

Inlet From	Inlet To	No.	Area (SF)	Drainage Area: Area (Acres)	Drainage Area: Impervious %	Runoff "C"	Tc (min)	Rainfall Intensity (i)	DA Flows (cfs)	Total DA Acres	Design Flows (cfs)	Reach Length (feet)	Span (ft.)	Dia. or Rise (in.)	Area (ft^2)	Hydraulic Radius	Slope %	Manning "n"	Design Capacity (cfs)	Design Velocity (ft/s)	Fall (feet)	Manhole Drop (feet)	Top EL	Depth	Datum: NAVD 88 (2001 ADJUSTMENT): Flowline Upstream (feet)	Flowline downstream (feet)	Actual Velocity (ft/s)	Hydraulic Gradient %	Headloss (feet)
B1	**B3**	B1	14195	0.33	1.00	0.80	23.21	3.53	0.92	0.326	0.92	127		8	0.349	0.167	0.75%	0.013	**1.05**	**3.01**	0.95		80.50	2.50	78.00	77.05	**2.64**	0.58%	0.73
B2	**B3**	B2	2994	0.07	0.25	0.35	21.24	3.69	0.09	0.069	0.09	24		8	0.349	0.167	0.75%	0.013	**1.05**	**3.01**	0.18		81.30	1.80	79.50	79.32	**0.25**	0.01%	0.00
B3	**B4**	B3	0	0.00	1.00	0.80	15.00	4.29	0.00	0.395	1.01	64		8	0.349	0.167	0.75%	0.013	**1.05**	**3.01**	0.48		81.10	4.05	77.05	76.57	**2.89**	0.70%	0.44
B4a	**B4**	B4a	2092	0.05	1.00	0.80	20.86	3.72	0.14	0.048	0.14	85		8	0.349	0.167	0.75%	0.013	**1.05**	**3.01**	0.64		83.00	4.00	79.00	78.36	**0.41**	0.01%	0.01
B4	**B5**	B4	9035	0.21	1.00	0.80	22.58	3.58	0.59	0.650	1.75	37		15	1.227	0.313	0.35%	0.013	**3.83**	**3.12**	0.13		81.00	4.43	76.57	76.44	**1.42**	0.07%	0.03
B5a	**B5**	B5a	3286	0.08	1.00	0.80	21.34	3.68	0.22	0.075	0.22	59		8	0.349	0.167	0.75%	0.013	**1.05**	**3.01**	0.44		83.00	4.00	79.00	78.56	**0.64**	0.03%	0.02
B5	**B6**	B5	0	0.00	1.00	0.80	15.00	4.29	0.00	0.725	1.97	72		15	1.227	0.313	0.35%	0.013	**3.83**	**3.12**	0.25		80.80	4.36	76.44	76.19	**1.61**	0.09%	0.07
B6a	**B6**	B6a	5148	0.12	1.00	0.80	21.87	3.64	0.34	0.118	0.34	53		8	0.349	0.167	0.75%	0.013	**1.05**	**3.01**	0.40		83.00	4.00	79.00	78.60	**0.99**	0.08%	0.04
B6	**J2**	B6	11053	0.25	1.00	0.80	22.85	3.56	0.72	1.097	3.04	101		15	1.227	0.313	0.35%	0.013	**3.83**	**3.12**	0.35		81.00	4.81	76.19	75.83	**2.47**	0.22%	0.22
J1	**J2**	J1	4324	0.10	0.50	0.50	21.66	3.65	0.18	0.099	0.18	40		8	0.349	0.167	0.75%	0.013	**1.05**	**3.01**	0.30		81.35	3.35	78.00	77.70	**0.52**	0.02%	0.01
J2	**J3**	J2	0	0.00	1.00	0.80	15.00	4.29	0.00	1.197	3.22	42		15	1.227	0.313	0.35%	0.013	**3.83**	**3.12**	0.15		81.20	5.37	75.83	75.69	**2.62**	0.25%	0.10
J3	**J6**	J3	11569	0.27	1.00	0.80	22.92	3.56	0.76	1.462	3.97	94		18	1.767	0.375	0.30%	0.013	**5.77**	**3.26**	0.28		81.00	5.31	75.69	75.40	**2.25**	0.14%	0.13
J4	**J5**	J4	5448	0.13	1.00	0.80	21.93	3.63	0.36	0.125	0.36	56		8	0.349	0.167	0.75%	0.013	**1.05**	**3.01**	0.42		80.70	3.20	77.50	77.08	**1.04**	0.09%	0.05
J5	**J8**	J5	5963	0.14	1.00	0.80	22.05	3.62	0.40	0.262	0.76	113		8	0.349	0.167	0.75%	0.013	**1.05**	**3.01**	0.85		80.50	3.42	77.08	76.23	**2.18**	0.39%	0.45
J6a	**J6**	J6a	7834	0.18	1.00	0.80	22.39	3.60	0.52	0.180	0.52	50		8	0.349	0.167	0.75%	0.013	**1.05**	**3.01**	0.38		83.00	4.00	79.00	78.63	**1.48**	0.18%	0.09
J6	**J7**	J6	12669	0.29	1.00	0.80	23.05	3.55	0.83	1.933	5.32	72		18	1.767	0.375	0.30%	0.013	**5.77**	**3.26**	0.22		81.00	5.60	75.40	75.19	**3.01**	0.25%	0.18
J7a	**J7**	J7a	6240	0.14	1.00	0.80	22.10	3.62	0.41	0.143	0.41	92		8	0.349	0.167	0.75%	0.013	**1.05**	**3.01**	0.69		83.00	4.00	79.00	78.31	**1.19**	0.12%	0.11
J7	**D9**	J7	0	0.00	1.00	0.80	15.00	4.29	0.00	2.076	5.73	54		18	1.767	0.375	0.30%	0.013	**5.77**	**3.26**	0.16		80.80	5.61	75.19	75.03	**3.24**	0.30%	0.16
J8	**ST4**	J8	4992	0.11	1.00	0.80	21.83	3.64	0.33	6.003	16.73	34		30	4.909	0.625	0.30%	0.011	**26.62**	**5.42**	0.10		80.90	6.02	74.88	74.78	**3.41**	0.12%	0.04
D1	**D4**	D1	1573	0.04	0.50	0.50	20.57	3.74	0.07	0.036	0.07	26		8	0.349	0.167	0.75%	0.013	**1.05**	**3.01**	0.19		81.00	2.50	78.50	78.31	**0.19**	0.00%	0.00
D2a	**D2**	D2a	5881	0.14	1.00	0.80	22.03	3.63	0.39	0.135	0.39	38		8	0.349	0.167	0.75%	0.013	**1.05**	**3.01**	0.28		83.00	4.00	79.00	78.72	**1.12**	0.10%	0.04
D3a	**D3**	D3a	4071	0.09	1.00	0.80	21.59	3.66	0.27	0.093	0.27	38		8	0.349	0.167	0.75%	0.013	**1.05**	**3.01**	0.28		83.00	4.00	79.00	78.72	**0.78**	0.05%	0.02
D2	**D3**	D2	10890	0.25	1.00	0.80	22.83	3.56	0.71	0.385	1.10	72		12	0.785	0.250	0.45%	0.013	**2.40**	**3.05**	0.32		80.50	2.50	78.00	77.68	**1.41**	0.10%	0.07
D3	**D4**	D3	0	0.00	1.00	0.80	15.00	4.29	0.00	0.478	1.38	70		12	0.785	0.250	0.45%	0.013	**2.40**	**3.05**	0.31		80.70	3.02	77.68	77.36	**1.75**	0.15%	0.10
D4	**D5**	D4	6872	0.16	1.00	0.80	22.22	3.61	0.46	0.672	1.90	77		12	0.785	0.250	0.45%	0.013	**2.40**	**3.05**	0.35		80.80	3.44	77.36	77.01	**2.42**	0.28%	0.22
D5	**D6**	D5	7921	0.18	1.00	0.80	22.41	3.60	0.52	0.854	2.42	71		15	1.227	0.313	0.35%	0.013	**3.83**	**3.12**	0.25		81.00	3.99	77.01	76.77	**1.98**	0.14%	0.10
D6	**D8**	D6	11479	0.26	1.00	0.80	22.91	3.56	0.75	1.118	3.17	130		15	1.227	0.313	0.35%	0.013	**3.83**	**3.12**	0.45		81.00	4.23	76.77	76.31	**2.59**	0.24%	0.31
D7	**D8**	D7	4400	0.10	0.90	0.74	21.68	3.65	0.27	0.101	0.27	45		8	0.349	0.167	0.75%	0.013	**1.05**	**3.01**	0.34		81.00	3.50	77.50	77.16	**0.78**	0.05%	0.02
D8	**D9**	D8	6425	0.15	1.00	0.80	22.14	3.62	0.43	1.366	3.87	86		18	1.767	0.375	0.45%	0.013	**7.07**	**4.00**	0.39		81.00	4.69	76.31	75.92	**2.19**	0.14%	0.12
D9a	**D9**	D9a	6426	0.15	1.00	0.80	22.14	3.62	0.43	0.148	0.43	49		10	0.545	0.208	0.65%	0.013	**1.77**	**3.25**	0.32		83.00	4.00	79.00	78.68	**0.78**	0.04%	0.02
D9	**J8**	D9	9669	0.22	1.00	0.80	22.67	3.58	0.63	3.812	10.67	49		24	3.142	0.500	0.30%	0.011	**14.68**	**4.67**	0.15		81.00	5.97	75.03	74.88	**3.40**	0.16%	0.08

HOUSTON AIRPORT SYSTEM

APPROVED

HOUSTON AIRPORT SYSTEM
DIRECTOR OR DESIGNATED
PDC REPRESENTATIVE

DATE

JACOBS

5985 Rogerdale Road
Houston, Texas
77072

P 832.351.6000
F 281.776.2501
W www.jacobs.com

TBPE Firm #2966

iSani CONSULTANTS

3143 YELLOWSTONE BLVD
HOUSTON, TX 77054
TEL: (713) 747-2399 FAX: (713) 748-3748
TBPE FIRM REG. No. F-4575

Seals:

INTERIM REVIEW ONLY
DOCUMENT INCOMPLETE; NOT INTENDED FOR PERMIT, BIDDING OR CONSTRUCTION.
ENGINEER: VINCENT N. JACOB
P.E. SERIAL NO.: 98325
DATE: 08-04-2015

Project Client:
Houston Airport System
Project Address

Program Management Office

George Bush
Intercontinental Airport (IAH)

115 Standifer St.
Humble, TX 77338

Number	Description	Date
	95% REVIEW OF BRIDGING DOCS	21 MAY 2015
	100% BRIDGING DOCUMENTS	4 AUG 2015

Project No.:

Copyright: 2015 Jacobs Engineering

TDLR #:

Drawing Sheet Title:

DRAINAGE CALCULATION

Drawing Sheet Number:

C3.01

Owner's Drawing Sheet No.:

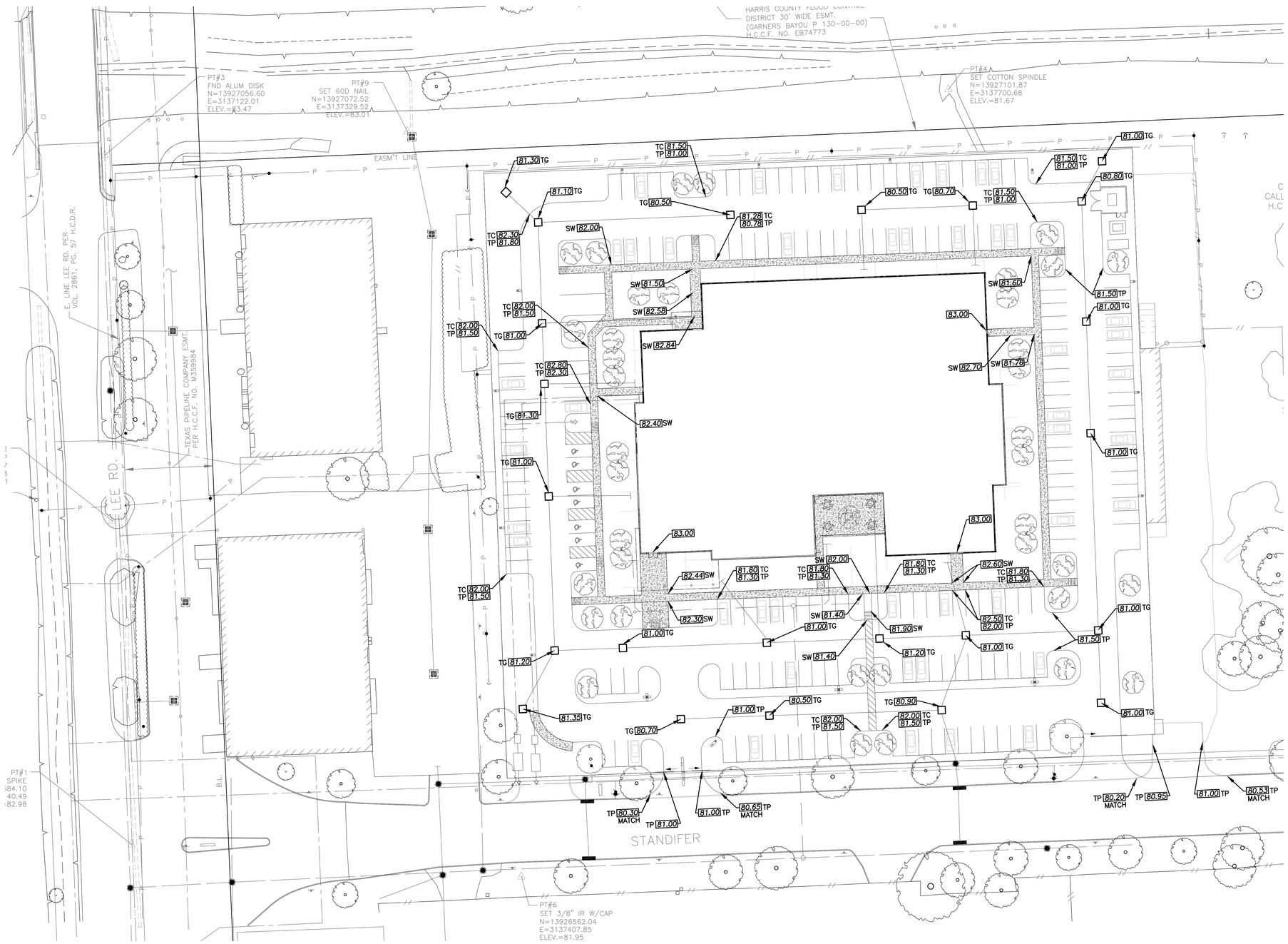

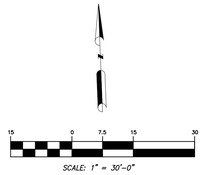

LEGEND:

	MB	MAILBOX
	PP	POWER POLE
	GUY	DOWN GUY
	STLT	STREET LIGHT
	TRSN	TRAFFIC SIGN
	RESN	RESERVED SIGN
	FH	FIRE HYDRANT
	WV	WATER VALVE
	WM	WATER METER
		GRATE INLET
		TYPE "BB" INLET
	MH	MANHOLE
	PLMK	PIPELINE MARKER
	GPNT	GAS PAINT MARKER
	MTPL	METER POLE
	EBOX	ELECTRIC BOX
		BUSH

PROPOSED LEGEND

TC	XX.XX	TOP OF CURB
TG	XX.XX	TOP OF GRATE
TP	XX.XX	TOP OF PAVEMENT
SW	XX.XX	TOP OF SIDEWALK

HOUSTON AIRPORT SYSTEM

APPROVED

HOUSTON AIRPORT SYSTEM DIRECTOR OR DESIGNATED PDC REPRESENTATIVE — DATE

JACOBS

5985 Rogerdale Road
Houston, Texas
77072

P 832.351.6000
F 281.776.2501
W www.jacobs.com

TBPE Firm #2966

iSani CONSULTANTS
3143 YELLOWSTONE BLVD
HOUSTON, TX 77054
TEL: (713) 747-2399 FAX: (713) 748-3748
TBPE FIRM REG. No. F-4575

Seals:

INTERIM REVIEW ONLY
DOCUMENT INCOMPLETE. NOT INTENDED FOR PERMIT, BIDDING OR CONSTRUCTION.
ENGINEER: VINCENT N. JACOB
P.E. SERIAL NO.: 98325
DATE: 08-04-2015

Project Client:
Houston Airport System
Project Address

Program Management Office

George Bush
Intercontinental Airport (IAH)

115 Standifer St.
Humble, TX 77338

Number	Description	Date
	95% REVIEW OF BRIDGING DOCS	21 MAY 2015
	100% BRIDGING DOCUMENTS	4 AUG 2015

Project No.:

Copyright: 2015 Jacobs Engineering

TDLR #:

Drawing Sheet Title:

GRADING PLAN

Drawing Sheet Number:

C3.02

Owner's Drawing Sheet No.:

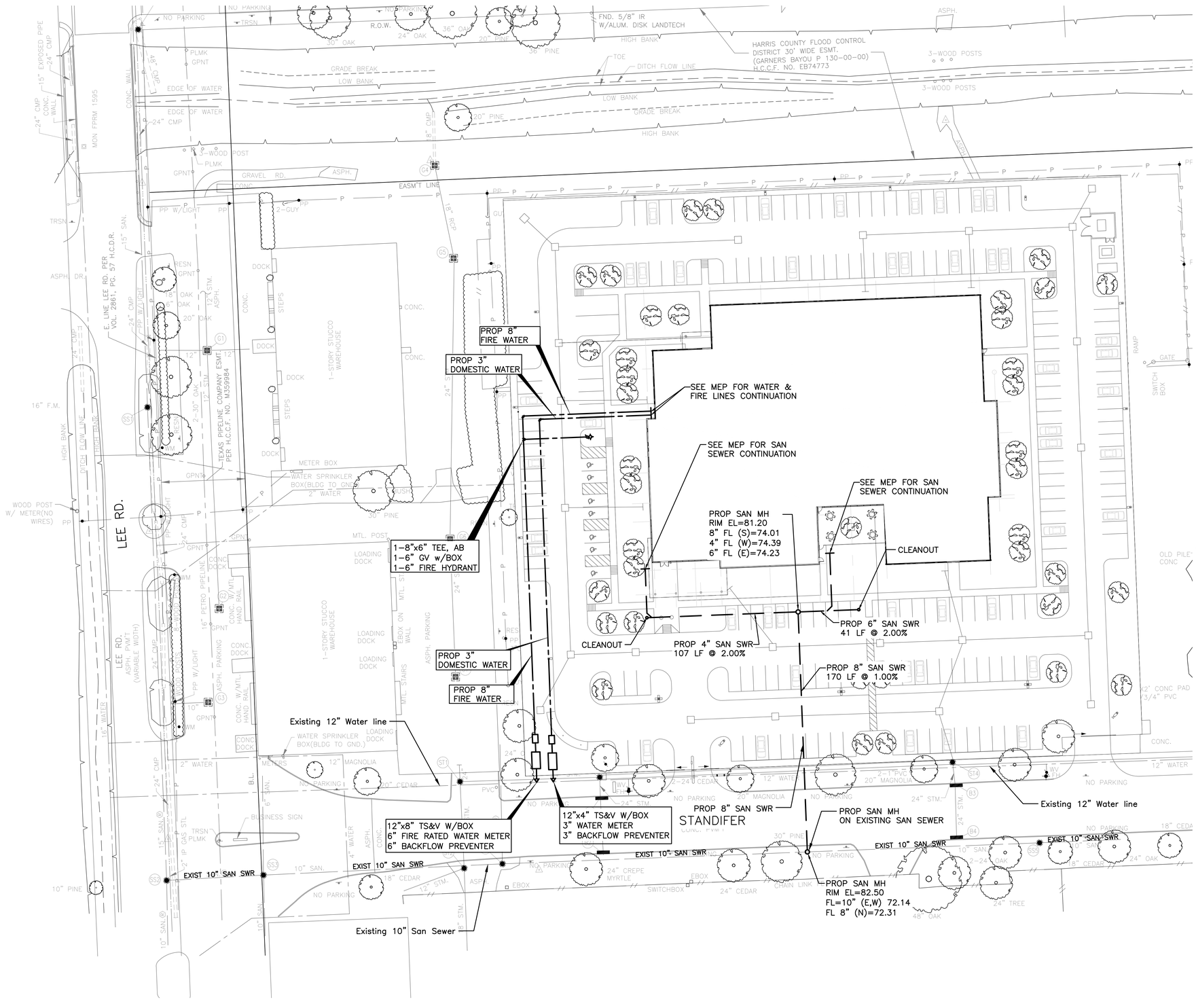

LEGEND:

MB	MAILBOX
PP	POWER POLE
GUY	DOWN GUY
STLT	STREET LIGHT
TRSN	TRAFFIC SIGN
RESN	RESERVED SIGN
FH	FIRE HYDRANT
WV	WATER VALVE
WM	WATER METER
	GRATE INLET
	TYPE "BB" INLET
MH	MANHOLE
PLMK	PIPELINE MARKER
GPNT	GAS PAINT MARKER
MTPL	METER POLE
EBOX	ELECTRIC BOX
	BUSH

PROPOSED LEGEND:

	SANITARY LINE
	WATER LINE
	SANITARY MANHOLE
	CLEANOUT
	TS&V w/BOX

HOUSTON AIRPORT SYSTEM

APPROVED

HOUSTON AIRPORT SYSTEM DIRECTOR OR DESIGNATED PDC REPRESENTATIVE — DATE

JACOBS

5985 Rogerdale Road
Houston, Texas
77072

P 832.351.6000
F 281.776.2501
W www.jacobs.com

TBPE Firm #2966

iSani CONSULTANTS

3143 YELLOWSTONE BLVD
HOUSTON, TX 77054
TEL: (713) 747-2399 FAX: (713) 748-3748
TBPE FIRM REG. No. F-4575

Seals:

INTERIM REVIEW ONLY
DOCUMENT INCOMPLETE: NOT INTENDED FOR PERMIT, BIDDING OR CONSTRUCTION.
ENGINEER: VINCENT N. JACOB
P.E. SERIAL NO.: 98325
DATE: 08-04-2015

Project Client:
Houston Airport System
Project Address

Program Management Office

George Bush Intercontinental Airport (IAH)

115 Standifer St.
Humble, TX 77338

Number	Description	Date
	95% REVIEW OF BRIDGING DOCS	21 MAY 2015
	100% BRIDGING DOCUMENTS	4 AUG 2015

Project No.:

Copyright: 2015 Jacobs Engineering

TDLR #:

Drawing Sheet Title:

UTILITY PLAN

Drawing Sheet Number:

C4.00

Owner's Drawing Sheet No.:

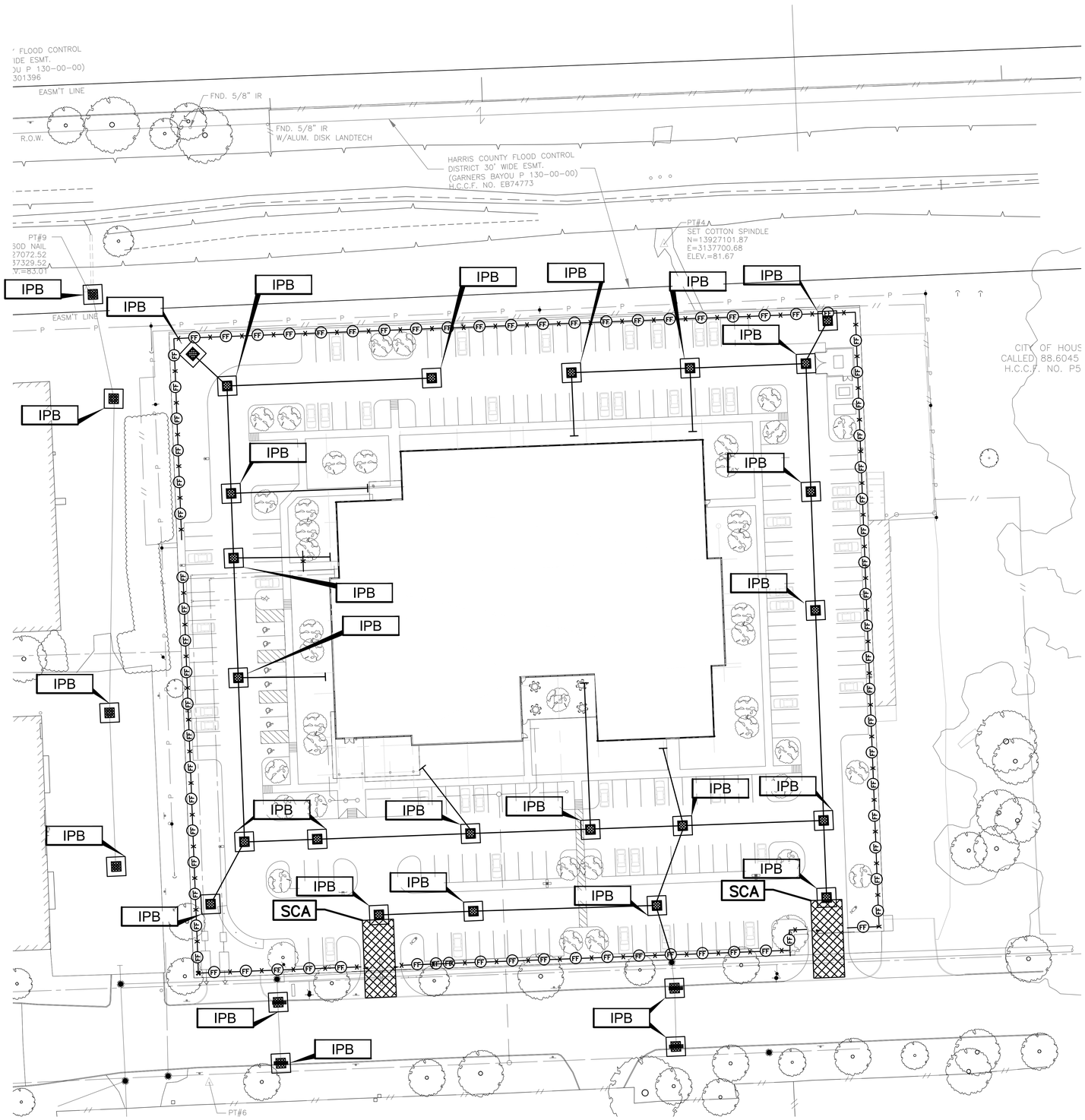

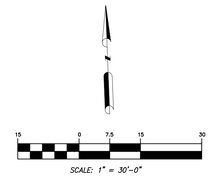

LEGEND:

	MB	MAILBOX
	PP	POWER POLE
	GUY	DOWN GUY
	STLT	STREET LIGHT
	TRSN	TRAFFIC SIGN
	RESN	RESERVED SIGN
	FH	FIRE HYDRANT
	WV	WATER VALVE
	WM	WATER METER
		GRATE INLET
		TYPE 'BB' INLET
	MH	MANHOLE
	PLMK	PIPELINE MARKER
	GPNT	GAS PAINT MARKER
	MTPL	METER POLE
	EBOX	ELECTRIC BOX
		BUSH

LEGEND

RFB	REINFORCED FILTER FABRIC BARRIER.
FF	FILTER FABRIC FENCE
IPB	INLET PROTECTION BARRIER STAGE I AND STAGE II
SCA	STABILIZED CONSTRUCTION ACCESS
F →	FLOW DIRECTION

HOUSTON AIRPORT SYSTEM

APPROVED

HOUSTON AIRPORT SYSTEM DIRECTOR OR DESIGNATED PDC REPRESENTATIVE — DATE

JACOBS

5985 Rogerdale Road
Houston, Texas
77072

P 832.351.6000
F 281.776.2501
W www.jacobs.com

TBPE Firm #2966

iSani CONSULTANTS
3143 YELLOWSTONE BLVD
HOUSTON, TX 77054
TEL: (713) 747-2399 FAX: (713) 748-3748
TBPE FIRM REG. No. F-4575

Seals:

INTERIM REVIEW ONLY
DOCUMENT INCOMPLETE: NOT INTENDED FOR PERMIT, BIDDING OR CONSTRUCTION.
ENGINEER: VINCENT N. JACOB
P.E. SERIAL NO.: 98325
DATE: 08-04-2015

Project Client:
Houston Airport System
Project Address

Program Management Office

George Bush
Intercontinental Airport (IAH)

115 Standifer St.
Humble, TX 77338

Number	Description	Date
	95% REVIEW OF BRIDGING DOCS	21 MAY 2015
	100% BRIDGING DOCUMENTS	4 AUG 2015

Project No.:

Copyright: 2015 Jacobs Engineering

TDLR #:

Drawing Sheet Title:

STORM WATER POLLUTION PREVENTION PLAN

Drawing Sheet Number:

C5.00

Owner's Drawing Sheet No.:

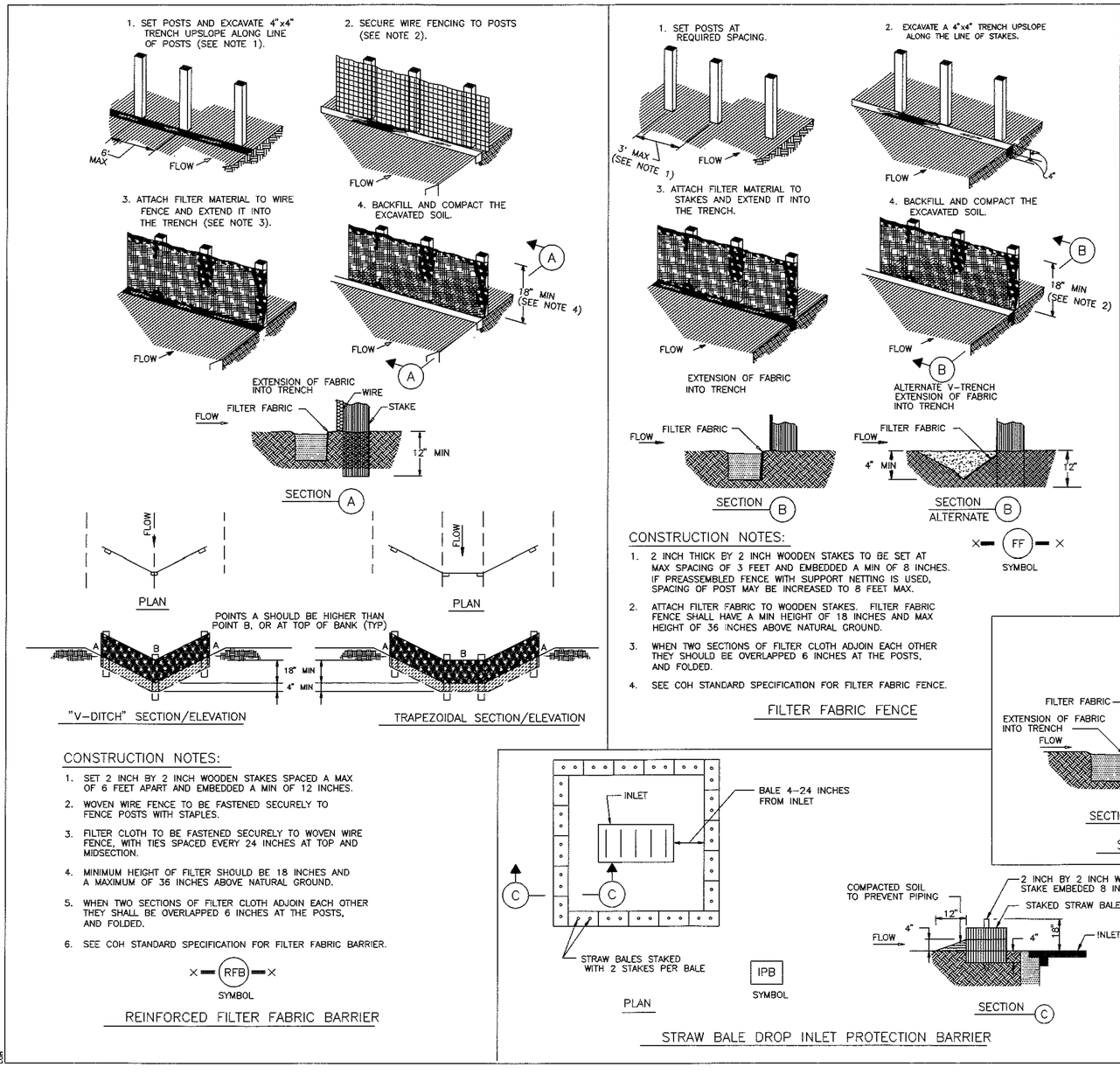

CONSTRUCTION NOTES:

1. 2 INCH THICK BY 2 INCH WOODEN STAKES TO BE SET AT MAX SPACING OF 3 FEET AND EMBEDDED A MIN OF 8 INCHES. IF PREASSEMBLED FENCE WITH SUPPORT NETTING IS USED, SPACING OF POST MAY BE INCREASED TO 8 FEET MAX.
2. ATTACH FILTER FABRIC TO WOODEN STAKES. FILTER FABRIC FENCE SHALL HAVE A MIN HEIGHT OF 18 INCHES AND MAX HEIGHT OF 36 INCHES ABOVE NATURAL GROUND.
3. WHEN TWO SECTIONS OF FILTER CLOTH ADJOIN EACH OTHER THEY SHOULD BE OVERLAPPED 6 INCHES AT THE POSTS, AND FOLDED.
4. SEE COH STANDARD SPECIFICATION FOR FILTER FABRIC FENCE.

FILTER FABRIC FENCE

CONSTRUCTION NOTES:

1. LENGTH SHALL BE AS SHOWN ON THE CONSTRUCTION DRAWINGS, BUT NOT LESS THAN 50 FEET.
2. THICKNESS SHALL BE NOT LESS THAN 8 INCHES.
3. WIDTH SHALL BE NOT LESS THAN FULL WIDTH OF ALL POINTS OF INGRESS OR EGRESS.
4. STABILIZATION FOR OTHER AREAS SHALL HAVE THE SAME AGGREGATE THICKNESS AND WIDTH REQUIREMENTS AS THE STABILIZED CONSTRUCTION EXIT, UNLESS OTHERWISE SHOWN ON THE CONSTRUCTION DRAWINGS.
5. STABILIZED AREA MAY BE WIDENED OR LENGTHENED TO ACCOMODATE A TRUCK WASHING AREA. AN OUTLET SEDIMENT TRAP MUST BE PROVIDED FOR THE TRUCK WASHING AREA.
6. SEE COH STANDARD SPECIFICATION FOR STABILIZED CONSTRUCTION EXIT.
7. STABILIZED CONSTRUCTION EXIT SHALL BE MAINTAINED FREE OF SEDIMENT FOR THE DURATION OF THE PROJECT.

CONSTRUCTION NOTES:

1. SET 2 INCH BY 2 INCH WOODEN STAKES SPACED A MAX OF 6 FEET APART AND EMBEDDED A MIN OF 12 INCHES.
2. WOVEN WIRE FENCE TO BE FASTENED SECURELY TO FENCE POSTS WITH STAPLES.
3. FILTER CLOTH TO BE FASTENED SECURELY TO WOVEN WIRE FENCE, WITH TIES SPACED EVERY 24 INCHES AT TOP AND MIDSECTION.
4. MINIMUM HEIGHT OF FILTER SHOULD BE 18 INCHES AND A MAXIMUM OF 36 INCHES ABOVE NATURAL GROUND.
5. WHEN TWO SECTIONS OF FILTER CLOTH ADJOIN EACH OTHER THEY SHALL BE OVERLAPPED 6 INCHES AT THE POSTS, AND FOLDED.
6. SEE COH STANDARD SPECIFICATION FOR FILTER FABRIC BARRIER.

RFB
SYMBOL

REINFORCED FILTER FABRIC BARRIER

CONSTRUCTION NOTE:

1. SEE CONSTRUCTION NOTES FOR RFB.

CITY OF HOUSTON
DEPARTMENT OF PUBLIC WORKS AND ENGINEERING
ENGINEERING, CONSTRUCTION AND REAL ESTATE DIVISION

STORM WATER POLLUTION PREVENTION PLAN DETAILS

(NOT TO SCALE)

APPROVED BY: CITY ENGINEER	APPROVED BY: DIRECTOR OF PUBLIC WORKS AND ENGINEERING
EFF DATE: OCT-01-2002	DWG NO: 01571-01

COH

HOUSTON AIRPORT SYSTEM

APPROVED

HOUSTON AIRPORT SYSTEM DIRECTOR OR DESIGNATED PDC REPRESENTATIVE — DATE

JACOBS
5985 Rogerdale Road
Houston, Texas
77072

P 832.351.6000
F 281.776.2501
W www.jacobs.com

TBPE Firm #2966

iSani CONSULTANTS
3143 YELLOWSTONE BLVD
HOUSTON, TX 77054
TEL: (713) 747-2399 FAX: (713) 748-3748
TBPE FIRM REG. No. F-4575

Seals:

INTERIM REVIEW ONLY
DOCUMENT INCOMPLETE: NOT INTENDED FOR PERMIT, BIDDING OR CONSTRUCTION.
ENGINEER: VINCENT N. JACOB
P.E. SERIAL NO.: 98325
DATE: 08-04-2015

Project Client:
Houston Airport System
Project Address

Program Management Office

George Bush Intercontinental Airport (IAH)

115 Standifer St.
Humble, TX 77338

Number	Description	Date
	95% REVIEW OF BRIDGING DOCS	21 MAY 2015
	100% BRIDGING DOCUMENTS	4 AUG 2015

Project No.:

Copyright: 2015 Jacobs Engineering

TDLR #:

Drawing Sheet Title:

STORM WATER POLLUTION PREVENTION DETAILS

Drawing Sheet Number:

C5.01

Owner's Drawing Sheet No.:

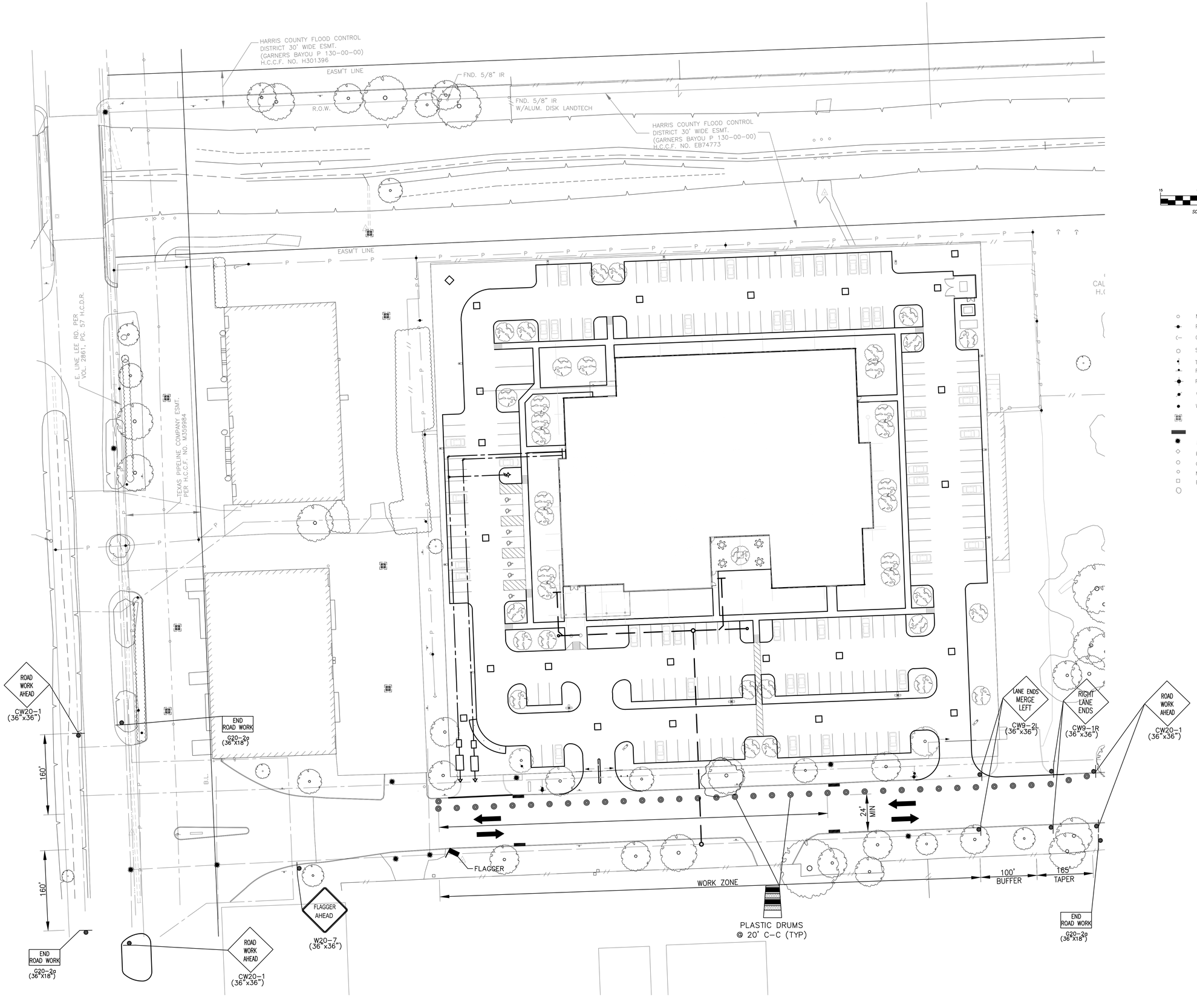

SCALE: 1" = 30'-0"

LEGEND:

	MB	MAILBOX
	PP	POWER POLE
	GUY	DOWN GUY
	STLT	STREET LIGHT
	TRSN	TRAFFIC SIGN
	RESN	RESERVED SIGN
	FH	FIRE HYDRANT
	WV	WATER VALVE
	WM	WATER METER
		GRATE INLET
		TYPE "BB" INLET
	MH	MANHOLE
	PLMK	PIPELINE MARKER
	GPNT	GAS PAINT MARKER
	MTPL	METER POLE
	EBOX	ELECTRIC BOX
		BUSH

HOUSTON AIRPORT SYSTEM

APPROVED

HOUSTON AIRPORT SYSTEM
DIRECTOR OR DESIGNATED
PDC REPRESENTATIVE

DATE

JACOBS

5985 Rogerdale Road
Houston, Texas
77072

P 832.351.6000
F 281.776.2501
W www.jacobs.com

TBPE Firm #2966

iSani CONSULTANTS

3143 YELLOWSTONE BLVD
HOUSTON, TX 77054
TEL: (713) 747-2399 FAX: (713) 748-3748
TBPE FIRM REG. No. F-4575

Seals:

INTERIM REVIEW ONLY
DOCUMENT INCOMPLETE:
NOT INTENDED FOR PERMIT, BIDDING OR CONSTRUCTION.
ENGINEER: VINCENT N. JACOB
P.E. SERIAL NO.: 98325
DATE: 08-04-2015

Project Client:
Houston Airport System
Project Address

Program Management Office

George Bush
Intercontinental Airport (IAH)

115 Standifer St.
Humble, TX 77338

Number	Description	Date
	95% REVIEW OF BRIDGING DOCS	21 MAY 2015
	100% BRIDGING DOCUMENTS	4 AUG 2015

Project No.:

Copyright: 2015 Jacobs Engineering

TDLR #:

Drawing Sheet Title:

TRAFFIC CONTROL PLAN

Drawing Sheet Number:

C6.00

Owner's Drawing Sheet No.:

NOTES:

1. DETAIL TO BE USED WHERE STORM SEWER SIZE IS 24" DIA OR LESS.
2. FOR SEWERS GREATER 24" DIA USE TYPE "C" MANHOLE.

NOTES TO SPECIFIER:

1. WALLS TO BE 6" CONCRETE (WALLS TO BE 8" THICK IF CONSTRUCTED OF BRICK).
2. NOT TO BE USED IN STREET. FOR AREA BETWEEN CURB AND PROPERTY LINE ONLY.

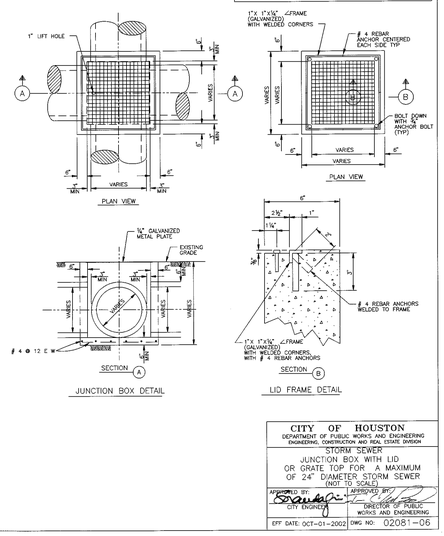

CITY OF HOUSTON
DEPARTMENT OF PUBLIC WORKS AND ENGINEERING
ENGINEERING, CONSTRUCTION AND REAL ESTATE DIVISION

STORM SEWER
JUNCTION BOX WITH LID OR GRATE TOP FOR A MAXIMUM OF 24" DIAMETER STORM SEWER
(NOT TO SCALE)

APPROVED BY: CITY ENGINEER | APPROVED BY: DIRECTOR OF PUBLIC WORKS AND ENGINEERING

EFF DATE: OCT-01-2002 | DWG NO: 02081-06

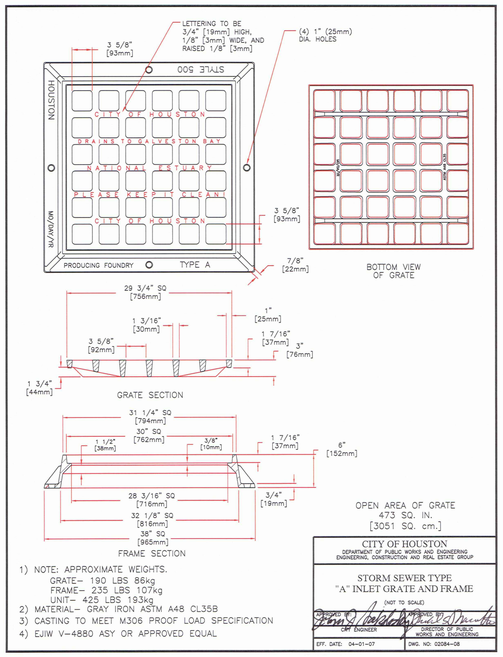

1) NOTE: APPROXIMATE WEIGHTS.
GRATE– 190 LBS 86kg
FRAME– 235 LBS 107kg
UNIT– 425 LBS 193kg
2) MATERIAL– GRAY IRON ASTM A48 CL35B
3) CASTING TO MEET M306 PROOF LOAD SPECIFICATION
4) EJIW V-4880 ASY OR APPROVED EQUAL

OPEN AREA OF GRATE
473 SQ. IN.
[3051 SQ. cm.]

CITY OF HOUSTON
DEPARTMENT OF PUBLIC WORKS AND ENGINEERING
ENGINEERING, CONSTRUCTION AND REAL ESTATE GROUP

STORM SEWER TYPE "A" INLET GRATE AND FRAME
(NOT TO SCALE)

APPROVED BY: CITY ENGINEER | APPROVED BY: DIRECTOR OF PUBLIC WORKS AND ENGINEERING

EFF. DATE: 04-01-07 | DWG. NO: 02084-08

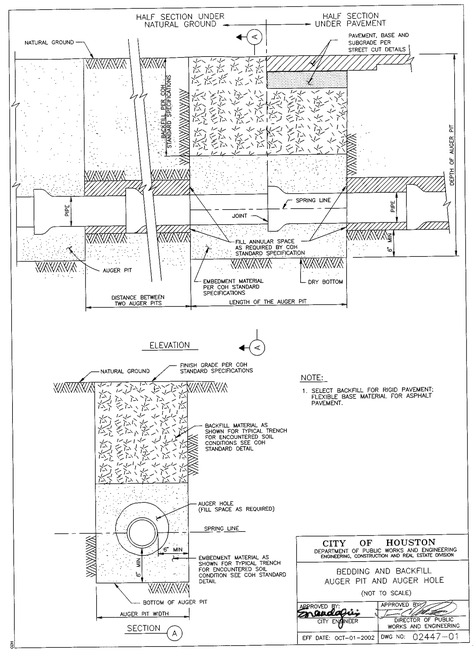

NOTE:
1. SELECT BACKFILL: FOR RIGID PAVEMENT; FLEXIBLE BASE MATERIAL FOR ASPHALT PAVEMENT.

CITY OF HOUSTON
DEPARTMENT OF PUBLIC WORKS AND ENGINEERING
ENGINEERING, CONSTRUCTION AND REAL ESTATE DIVISION

BEDDING AND BACKFILL AUGER PIT AND AUGER HOLE
(NOT TO SCALE)

APPROVED BY: CITY ENGINEER | APPROVED BY: DIRECTOR OF PUBLIC WORKS AND ENGINEERING

EFF DATE: OCT-01-2002 | DWG NO: 02447-01

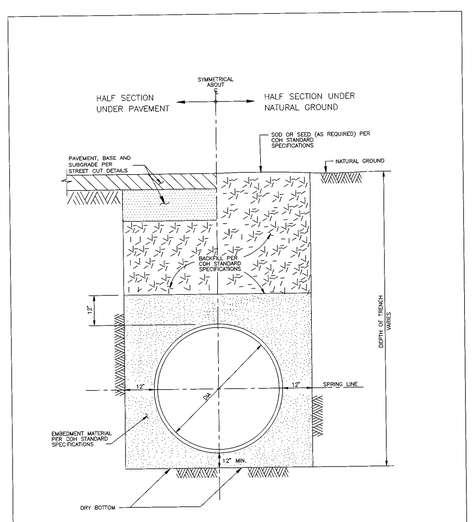

CITY OF HOUSTON
DEPARTMENT OF PUBLIC WORKS AND ENGINEERING
ENGINEERING, CONSTRUCTION AND REAL ESTATE DIVISION

WATER DISTRIBUTION MAIN BEDDING AND BACKFILL FOR OPEN CUT TRENCHES
(NOT TO SCALE)

APPROVED BY: CITY ENGINEER | APPROVED BY: DIRECTOR OF PUBLIC WORKS AND ENGINEERING

EFF DATE: OCT-01-2002 | DWG NO: 02317-04

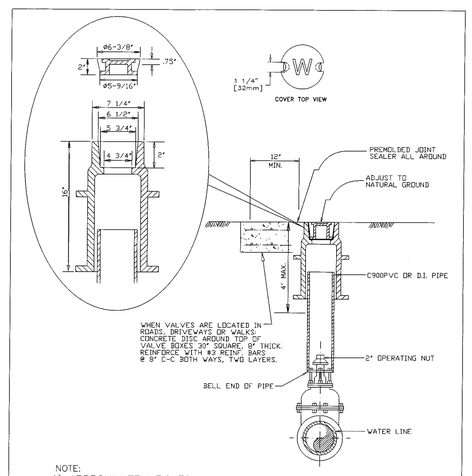

NOTE:
1) APPROXIMATE WEIGHTS.
FRAME– 46 LBS
COVER– 10 LBS
2) MATERIAL– GRAY IRON ASTM A48 CL35B

CITY OF HOUSTON
DEPARTMENT OF PUBLIC WORKS AND ENGINEERING
ENGINEERING, CONSTRUCTION AND REAL ESTATE DIVISION

VALVE BOX A DETAIL
(NOT TO SCALE)

APPROVED BY: CITY ENGINEER | APPROVED BY: DIRECTOR OF PUBLIC WORKS AND ENGINEERING

EFF DATE: OCT-01-2002 | DWG NO: 02085-03

GENERAL NOTES:

1. PROVIDE STEEL TAPPING SLEEVE AS PER WATER MAIN SPECIFICATIONS.
2. WELD SHALL BE AS NOTED IN WELD SYMBOLS.
3. INSULATING KIT IN ACCORDANCE WITH WATER MAIN STANDARD SPECIFICATIONS.
4. REPAIR COATING AS PER WATER MAIN COH STANDARD SPECIFICATIONS.

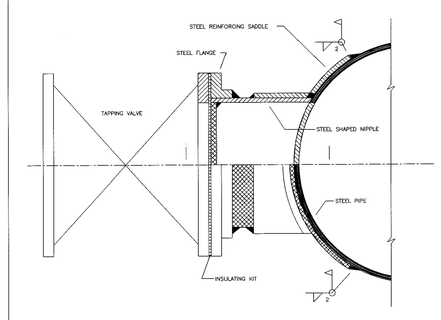

CITY OF HOUSTON
DEPARTMENT OF PUBLIC WORKS AND ENGINEERING
ENGINEERING, CONSTRUCTION AND REAL ESTATE DIVISION

STANDARD TAP TO EXISTING STEEL MAIN
(NOT TO SCALE)

APPROVED BY: CITY ENGINEER | APPROVED BY: DIRECTOR OF PUBLIC WORKS AND ENGINEERING

EFF DATE: OCT-01-2002 | DWG NO: 02512-04

HOUSTON AIRPORT SYSTEM

APPROVED

HOUSTON AIRPORT SYSTEM DIRECTOR OR DESIGNATED PDC REPRESENTATIVE | DATE

JACOBS
5985 Rogerdale Road
Houston, Texas
77072

P 832.351.6000
F 281.776.2501
W www.jacobs.com

TBPE Firm #2966

iSani CONSULTANTS
3143 YELLOWSTONE BLVD
HOUSTON, TX 77054
TEL: (713) 747-2399 FAX: (713) 748-3748
TBPE FIRM REG. No. F-4575

Seals:

INTERIM REVIEW ONLY
DOCUMENT INCOMPLETE: NOT INTENDED FOR PERMIT, BIDDING OR CONSTRUCTION.
ENGINEER: VINCENT N. JACOB
P.E. SERIAL NO.: 98325
DATE: 08-04-2015

Project Client:
Houston Airport System
Project Address

Program Management Office

George Bush Intercontinental Airport (IAH)

115 Standifer St.
Humble, TX 77338

Number	Description	Date
	95% REVIEW OF BRIDGING DOCS	21 MAY 2015
	100% BRIDGING DOCUMENTS	4 AUG 2015

Project No.:

Copyright: 2015 Jacobs Engineering

TDLR #:

Drawing Sheet Title:

COH AND SITE DETAILS

Drawing Sheet Number:

C7.00

Owner's Drawing Sheet No.:

NOTES ON USE OF STANDARD DETAIL 02082-02

NOTES TO SPECIFIER:

1. "–" INDICATES THAT A SPECIAL DESIGN OR THE NEXT LARGER MANHOLE SIZE SHALL BE USED.
2. TABLE 1 IS BASED ON A MIN SEPARATION DISTANCE "S" OF 15.5" OR INTERSECTION PIPE OD/2, WHICHEVER IS GREATER, BETWEEN MAIN AND INTERSECTING PIPES ALONG THE MANHOLE INSIDE WALL ARC.
3. PIPE WALL THICKNESS USED IN TABLE 1 ARE BASED ON RCP. THE DESIGN ENGINEER MAY CALCULATE TO SEE IF THINNER WALL PIPES CAN MEET THE SEPARATION CRITERIA FOR ANGLES SMALLER THAN THE TABLE ALLOWS.

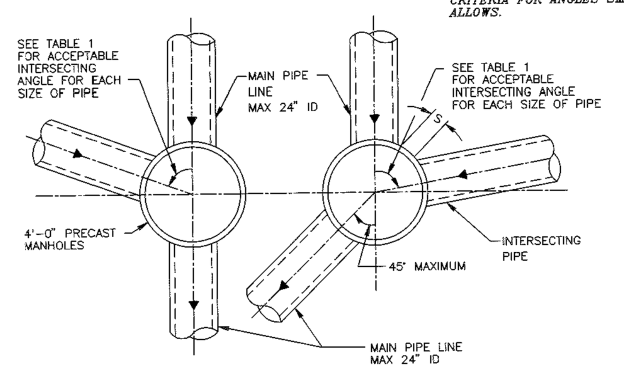

MAX 24" ID MAIN PIPE ALLOWED FOR STRAIGHT THROUGH TO 45° DEFLECTION

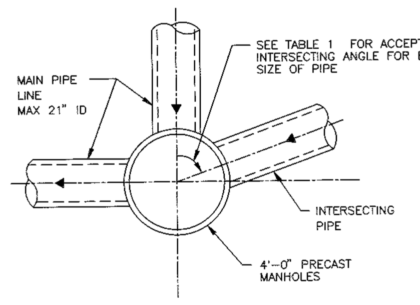

MAX 21" ID MAIN PIPE ALLOWED FOR 45° TO 90° DEFLECTION

TABLE 1

MIN ANGLE AND INTERSECTING PIPE SIZES FOR A 4'-0" DIA MANHOLE

INTERSECTING PIPE SIZE (INCHES)	MIN INTERSECTING ANGLE IN DEGREES FOR VARIOUS MAIN PIPE SIZES IN INCHES							
	6"	8"	10"	12"	15"	18"	21"	24"
6	55	58	60	65	70	75	80	85
8		60	63	68	73	77	82	87
10			66	71	75	80	85	90
12				76	80	85	90	–
15					85	90	–	–
18						–	–	–
21							–	–
24								–

NOT APPLICABLE UNLESS HYDRAULICS DICTATE (INTERSECTING PIPE > MAIN PIPE)

CITY OF HOUSTON
DEPARTMENT OF PUBLIC WORKS AND ENGINEERING
ENGINEERING, CONSTRUCTION AND REAL ESTATE DIVISION

SANITARY SEWER 4'-0" DIAMETER PRECAST CONCRETE MANHOLE NOTES
(NOT TO SCALE)

APPROVED BY: CITY ENGINEER | APPROVED BY: DIRECTOR OF PUBLIC WORKS AND ENGINEERING
EFF DATE: OCT-01-2002 | DWG NO: 02082N-02

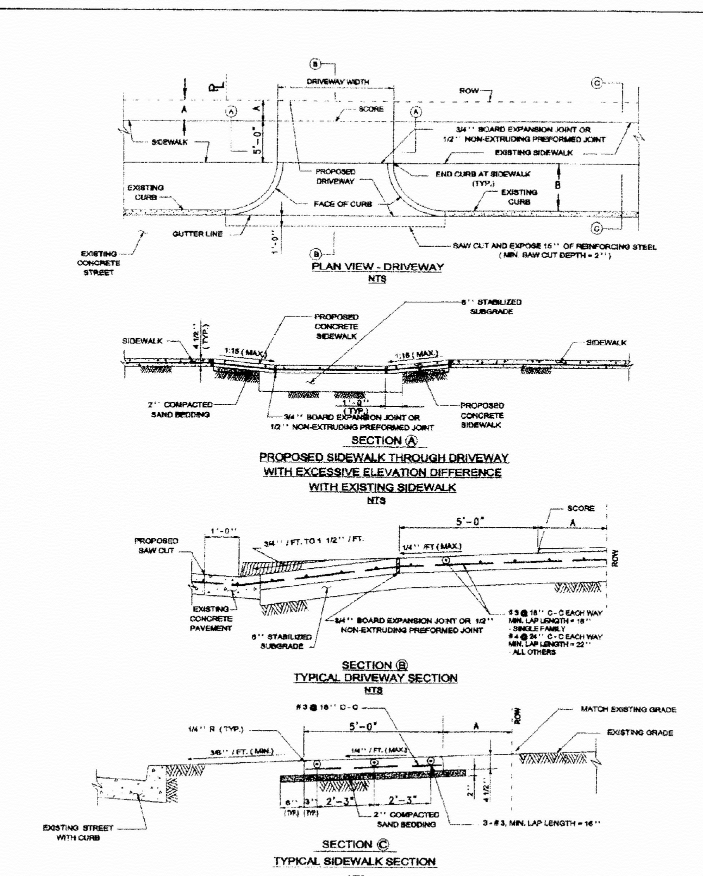

NOTES

1. IF AVAILABLE ROW IS NOT SUFFICIENT TO ACCOMMODATE A 5-FEET SIDEWALK, ENGINEER SHALL OBTAIN A VARIANCE FROM THE CITY ENGINEER FOR A 4-FEET WIDE SIDEWALK.
2. DRIVEWAYS SHALL BE 6" THICK FOR SINGLE FAMILY USE AND 7" THICK FOR ALL OTHERS (I.E. COMMERCIAL, INDUSTRIAL, ETC.)
3. DRIVEWAYS AND SIDEWALKS SHALL BE CONSTRUCTED WITH PORTLAND CEMENT CONCRETE AND INCLUDE 5-1/2 SACKS OF CEMENT PER CUBIC YARD OF CONCRETE.
4. 6X6-W2.9 X W2.9 WELDED WIRE FABRIC MAY BE USED IN LIEU OF THE REINFORCING STEEL.
5. EXPANSION & CONSTRUCTION JOINTS ALONG SIDEWALKS SHALL BE ACCORDING TO DRAWING NO. 02752-02.
6. REFER CHAPTER 10 DESIGN REQUIREMENTS FOR A AND B.

CITY OF HOUSTON
DEPARTMENT OF PUBLIC WORKS AND ENGINEERING

DRIVEWAY DETAIL WITH 6" CURBED STREETS
(NOT TO SCALE)

APPROVED BY: CITY ENGINEER | APPROVED BY: DIRECTOR OF PUBLIC WORKS AND ENGINEERING
EFF DATE: JULY-01-2009 | DWG NO: 02754-01B

NOTES:

1. DEPTH OF MANHOLE DETERMINES SECTIONS REQUIRED.
2. PRECAST CONCRETE RINGS SHALL BE PROVIDED FOR A COMBINED ADJUSTMENT HEIGHT OF AT LEAST 12". THE TOTAL HEIGHT OF THE ADJUSTMENT RINGS SHALL NOT EXCEED 1'-6".
3. MANHOLE WALL THICKNESS FOR DEPTH EXCEEDING 12'-0" SHALL BE DETERMINED TO MEET LOADING CONDITIONS. MIN THICKNESS 5".
4. MANHOLE DROP AND INTERSECTING PIPES SHALL BE INSTALLED ONLY WHEN CALLED FOR IN PLAN AND PROFILE DRAWING.
5. SEAT MANHOLE FRAME IN SEALANT PER COH STANDARD SPECIFICATION.
6. ECCENTRIC PRECAST CONCRETE MANHOLE MAY BE USED.
7. OMIT CEMENT MORTAR WHEN MANHOLE IS LOCATED IN PAVED AREAS.
8. MIN REINFORCING IN THE PRECAST CONCRETE BASE SHALL BE # 5 @ 8 EW.

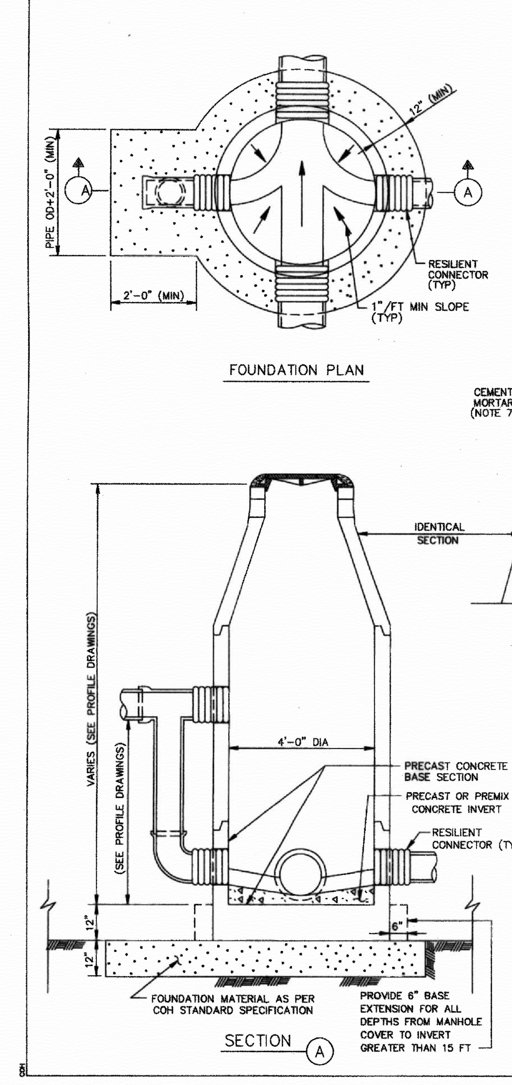

CITY OF HOUSTON
DEPARTMENT OF PUBLIC WORKS AND ENGINEERING

SANITARY SEWER 4'-0" DIAMETER PRECAST CONCRETE MANHOLE
(NOT TO SCALE)

APPROVED BY: CITY ENGINEER | APPROVED BY: DIRECTOR OF PUBLIC WORKS AND ENGINEERING
EFF DATE: JULY-01-2010 | DWG NO: 02082-02

NOTES:

1. THIS DETAIL MAY BE USED ONLY FOR DRY STABLE TRENCH CONDITIONS PER COH STANDARD. SEE COH STANDARD SPECIFICATION FOR REQUIREMENTS IN OTHER CONDITIONS.
2. MIN TRENCH WIDTH SHALL BE PIPE OD PLUS AN ALLOWANCE "A" FOR THE NOMINAL PIPE SIZE:

NOMINAL PIPE SIZE	"A"
18" TO 30"	24"
OVER 30"	36"

3. MAX TRENCH WIDTH SHALL BE NOT GREATER THAN MIN TRENCH WIDTH PLUS 24 INCHES, UNLESS OTHERWISE NOTED.
4. ALTERNATIVE EMBEDMENT BACKFILL MATERIALS FOR FORCE MAINS MAY BE ALLOWED. SEE COH STANDARD SPECIFICATIONS.

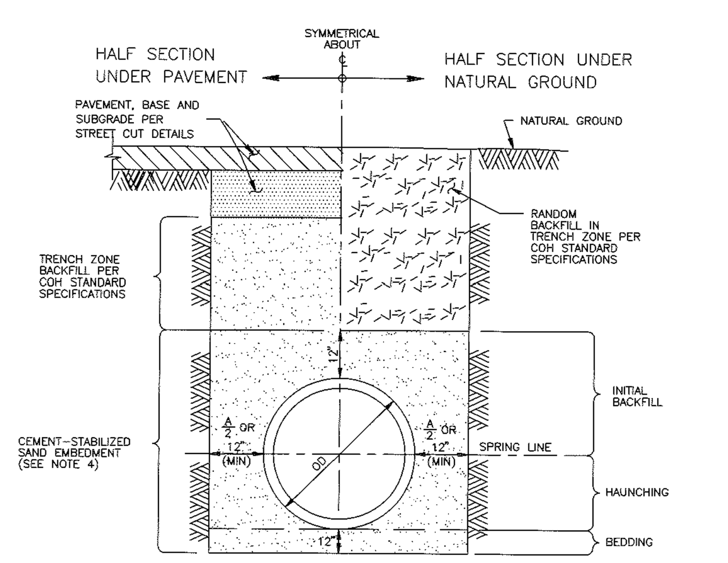

TYPICAL CROSS-SECTION

CITY OF HOUSTON
DEPARTMENT OF PUBLIC WORKS AND ENGINEERING
ENGINEERING, CONSTRUCTION AND REAL ESTATE DIVISION

SANITARY OR STORM SEWER BEDDING AND BACKFILL FOR DRY STABLE TRENCH
(NOT TO SCALE)

APPROVED BY: CITY ENGINEER | APPROVED BY: DIRECTOR OF PUBLIC WORKS AND ENGINEERING
EFF DATE: OCT-01-2002 | DWG NO: 02317-03

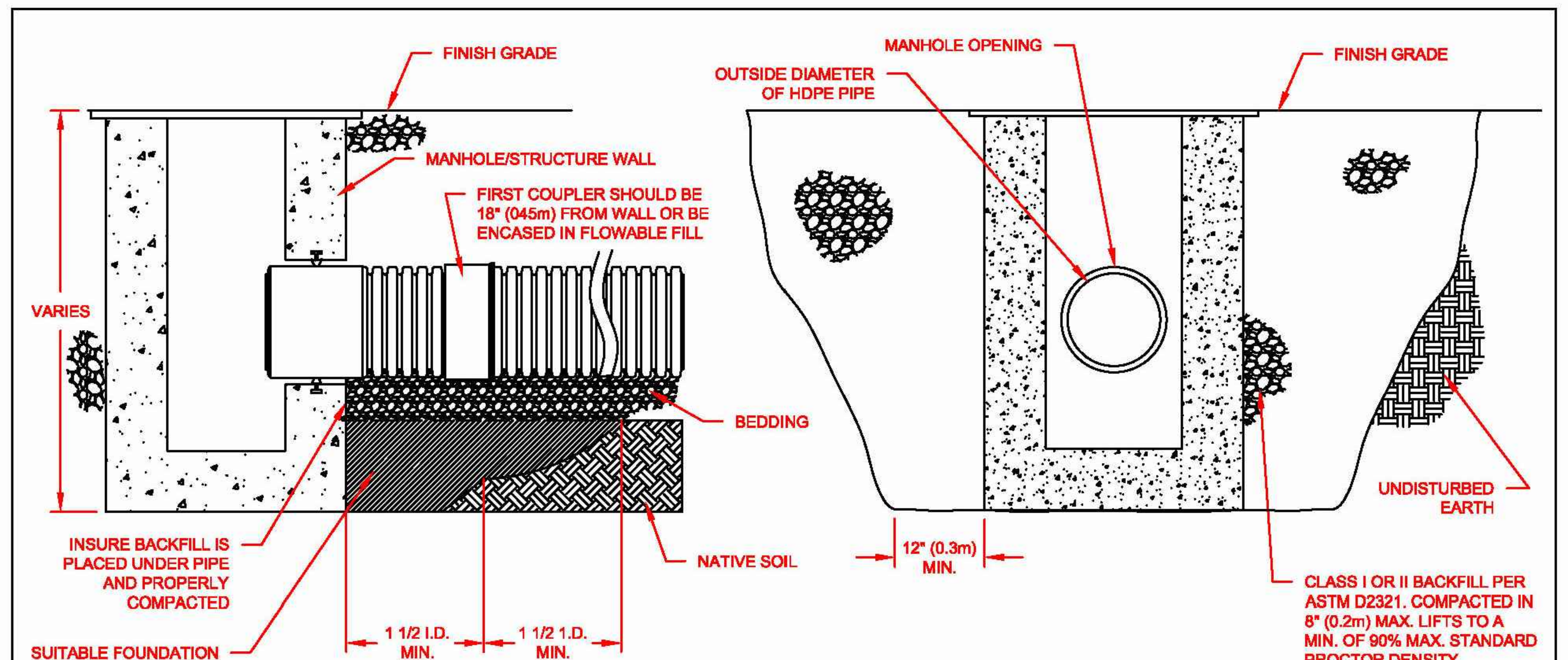

NOTES:

1. MAXIMUM INSERTION ANGLE SHALL NOT EXCEED REQUIREMENTS AS SPECIFIED BY THE MANUFACTURER.
2. SEE STANDARD DETAILS STD-202 (A-B) THROUGH STD-204 (A-E) FOR STRUCTURE CONNECTIONS, PRODUCT INFORMATION AND DIMENSIONAL PIPE DATA. INSTALLATION RECOMMENDATIONS ARE ALSO SPECIFIED IN TECHNICAL NOTE 5.04: HDPE CONNECTIONS TO MANHOLES AND STRUCTURES.
3. PERFORMANCE HIGHLY DEPENDENT ON INSTALLATION. CONTRACTOR MUST INSURE MANHOLE GASKET IS UNIFORMLY SEATED AROUND STRUCTURE ADAPTER. EXTRA PRECAUTIONSMUST BE TAKEN TO PREVENT DIFFERENTIAL SETTLEMENT BETWEEN THE PIPE AND MANHOLE.

© 2007 HANCOR, INC.

REV.	DESCRIPTION	BY	MM/DD/YY	CHK'D
1	UPDATED DRAWING	TJR	02/20/07	CKS

HANCOR, INC. HAS PREPARED THIS DETAIL BASED ON INFORMATION PROVIDED TO HANCOR. THIS DRAWING IS INTENDED TO DEPICT THE COMPONENTS AS REQUESTED. HANCOR HAS NOT PERFORMED ANY ENGINEERING OR DESIGN SERVICES FOR THIS PROJECT, NOR HAS HANCOR INDEPENDENTLY VERIFIED THE INFORMATION SUPPLIED. THE INSTALLATION DETAILS PROVIDED HEREIN ARE GENERAL RECOMMENDATIONS AND ARE NOT SPECIFIC FOR THIS PROJECT. THE DESIGN ENGINEER SHALL REVIEW THESE DETAILS PRIOR TO CONSTRUCTION. IT IS THE DESIGN ENGINEERS RESPONSIBILITY TO ENSURE THE DETAILS PROVIDED HEREIN MEETS OR EXCEEDS THE APPLICABLE NATIONAL, STATE, OR LOCAL REQUIREMENTS AND TO ENSURE THAT THE DETAILS PROVIDED HEREIN ARE ACCEPTABLE FOR THIS PROJECT.

STRUCTURE CONNECTION INSTALLATION DETAIL
DRAWING NUMBER: STD-201

Hancor®
401 OLIVE ST.
FINDLAY, OHIO 45839

CKS | 10/10/06 | NTS | 1 OF 1

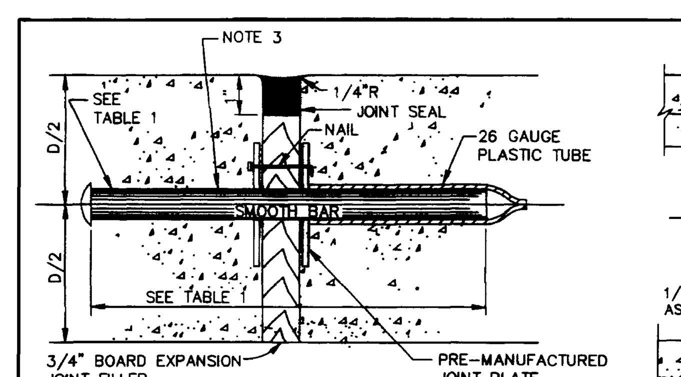

SECTION
DOWEL TYPE EXPANSION JOINT
N.T.S

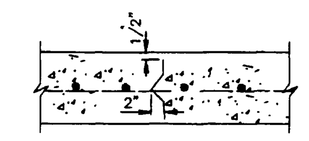

SECTION
DEFORMED METAL STRIP
N.T.S.

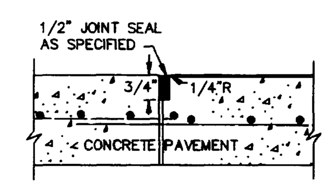

SECTION
CONSTRUCTION JOINT SEAL
N.T.S.

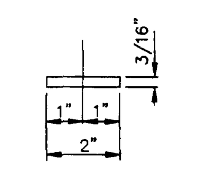

PLAN – JOINT PLATE

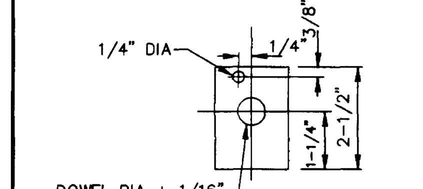

ELEVATION – JOINT PLATE
N.T.S.

NOTES:

1. STEEL TO MEET ASTM STANDARD SPECIFICATIONS FOR CONCRETE REINFORCING BARS. UNITS TO BE SPACED ON 12" CENTERS.
2. EXPANSION JOINT TO BE PLACED AT THE END OF EACH CURB RADIUS.
3. CENTER DOWEL HORIZONTALLY ON JOINT.
4. CENTER DOWEL VERTICALLY IN CONCRETE BASE. EXTEND THICKENED CONCRETE AS NEEDED TO MAINTAIN 3" MIN. COVER.
5. CITY OF HOUSTON APPROVED PRODUCTS MAY BE USED AS JOINT PLATE ALTERNATIVE

TABLE 1

PAVEMENT THICKNESS (IN)	DOWEL SIZES AND SPACINGS		
	DIAMETER (IN)	LENGTH (IN)	SPACING (IN)
6	3/4	18	12
7	1	18	12
8	1	18	12
9	1 1/4	18	12
10	1 1/4	18	12
11	1 1/4	18	12
12	1 1/4	18	12

CITY OF HOUSTON
DEPARTMENT OF PUBLIC WORKS AND ENGINEERING
ENGINEERING, CONSTRUCTION AND REAL ESTATE DIVISION

PAVEMENT EXPANSION AND CONSTRUCTION JOINT DETAILS
(NOT TO SCALE)

APPROVED BY: CITY ENGINEER | APPROVED BY: DIRECTOR OF PUBLIC WORKS AND ENGINEERING
EFF DATE: June-01-2003 | DWG NO: 02752-01

HOUSTON AIRPORT SYSTEM

APPROVED

HOUSTON AIRPORT SYSTEM DIRECTOR OR DESIGNATED PDC REPRESENTATIVE | DATE

JACOBS
5985 Rogerdale Road
Houston, Texas
77072

P 832.351.6000
F 281.776.2501
W www.jacobs.com

TBPE Firm #2966

iSani CONSULTANTS
3143 YELLOWSTONE BLVD
HOUSTON, TX 77054
TEL: (713) 747-2399 FAX: (713) 748-3748
TBPE FIRM REG. No. F-4575

Seals:

INTERIM REVIEW ONLY
DOCUMENT INCOMPLETE: NOT INTENDED FOR PERMIT, BIDDING OR CONSTRUCTION.
ENGINEER: VINCENT N. JACOB
P.E. SERIAL NO.: 98325
DATE: 08-04-2015

Project Client:
Houston Airport System
Project Address

Program Management Office

George Bush Intercontinental Airport (IAH)

115 Standifer St.
Humble, TX 77338

Number	Description	Date
	95% REVIEW OF BRIDGING DOCS	21 MAY 2015
	100% BRIDGING DOCUMENTS	4 AUG 2015

Project No.:
Copyright: 2015 Jacobs Engineering
TDLR #:

Drawing Sheet Title:

COH AND SITE DETAILS

Drawing Sheet Number:

C7.01

Owner's Drawing Sheet No.:

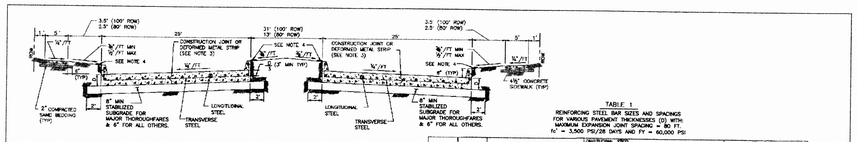

TYPICAL DOUBLE ROADWAY SECTION FOR CONCRETE PAVEMENT WITH CURBS

NOTES:

1. THE MAXIMUM WIDTH BETWEEN LONGITUDINAL JOINTS SHALL NOT EXCEED 15'-0".
2. ALL EARTHEN AREAS ARE TO BE HYDROMULCHED UNLESS SHOWN OTHERWISE ON DRAWINGS.
3. CONTRACTOR MAY SAW CUT IN LIEU OF DEFORMED METAL STRIP.
4. USE STRIP OF SOD GRASS TO PREVENT EROSION UNTIL STAND OF GRASS IS ESTABLISHED.
5. AN EQUAL OR LARGER AREA OF WELDED REINFORCEMENT BAR CONFORMING TO ASTM A497, MAY BE SUBSTITUTED FOR REBARS LISTED IN TABLE 1.
6. IF AVAILABLE ROW IS NOT SUFFICIENT TO ACCOMMODATE A 5-FEET SIDEWALK, ENGINEER SHALL OBTAIN A VARIANCE FROM THE CITY ENGINEER FOR A 4-FEET WIDE SIDEWALK.

TABLE 1
REINFORCING STEEL BAR SIZES AND SPACINGS FOR VARIOUS PAVEMENT THICKNESSES (D) WITH SLAB WIDTHS (W) EQUAL TO SHOWN + 30 FT.
f'_c = 3,500 PSI/28 DAYS AND FY = 60,000 PSI

PAVEMENT THICKNESS D (IN)	PAVEMENT WIDTH (FT)	# 5 BARS NUMBER OF BARS	# 5 BARS SPACING (IN)	# 5 BARS END BAR SPACING (IN)	# 6 BARS NUMBER OF BARS	# 6 BARS SPACING (IN)	# 6 BARS END BAR SPACING (IN)	# 8 BARS NUMBER OF BARS	# 8 BARS SPACING (IN)	# 8 BARS END BAR SPACING (IN)	TRANSVERSE STEEL # 5 BARS SPACING (IN)	TRANSVERSE STEEL # 6 BARS SPACING (IN)	TRANSVERSE STEEL # 8 BARS SPACING (IN)
6	36	17	22.00	4	–	–	–	–	–	–	36	–	–
7	36	17	19.25	4	–	–	–	–	–	–	36	–	–
7	37	21	15.00	3	–	–	–	–	–	–	36	–	–
7	41	23	15.00	3	–	–	–	–	–	–	36	–	–
7	42	25	15.00	3	–	–	–	–	–	–	36	–	–
8	40	21	17.00	3.75	–	–	–	–	–	–	36	–	–
8	41	22	15.50	2.75	13	24.50	4	–	–	–	36	36	–
8	42	23	15.00	3.5	13	24.00	4	–	–	–	36	36	–
8	43	24	15.00	3	14	23.50	4	–	–	–	36	36	–
8	44	25	15.75	3.25	16	22.50	4	–	–	–	36	36	–
8	45	26	15.75	4	22	24.75	5	–	–	–	36	36	–
8	48	30	15.75	3.25	23	24.25	5	–	–	–	36	36	–
9	39	23	14.00	3	14	22.50	4	–	–	–	36	36	–
9	40	24	13.75	3	15	22.50	4.5	–	–	–	36	36	–
9	43	27	13.75	3.75	20	21.50	5.5	–	–	–	36	36	–
9	44	28	13.75	4	21	21.25	5.5	–	–	–	36	36	–
9	45	28	14.00	3.75	20	21.75	5	–	–	–	36	36	–
9	46	29	14.00	4	20	21.25	4.5	–	–	–	36	36	–
9	47	29	14.25	4	17	19.50	4	–	–	–	36	36	36
10	35	19	12.00	3.75	13	19.75	4	–	–	–	30	36	36
10	36	20	12.00	3.5	14	19.50	4.5	–	–	–	30	36	36
10	44	25	12.00	4	20	18.50	4.5	–	–	–	30	36	36
10	45	26	12.00	3	20	19.00	3	–	–	–	24	36	36
11	35	17	11.00	3	17	18.00	3	12	26.75	3	24	36	36
11	36	18	11.00	2.75	17	17.75	3.5	12	26.50	3	24	36	36
11	38	20	11.00	3	20	18.00	3	12	25.75	4	24	36	36
11	39	20	11.00	2.5	20	17.75	3	12	25.00	4	24	36	36
11	44	18	11.125	2.5	20	17.00	3.5	12	26.00	4	24	36	36
11	45	19	11.125	3	20	17.75	4	20	25.50	3	24	36	36
12	35	–	–	–	18	17.25	4	13	24.50	3	24	36	36
12	36	–	–	–	18	16.00	4	13	23.50	4	24	36	36
12	37	–	–	–	20	16.50	3.5	14	23.00	3.5	24	36	36
12	38	–	–	–	21	17.25	3.5	20	22.50	3.5	24	36	36
12	43	–	–	–	23	17.25	3	20	22.00	3	24	36	36
12	48	–	–	–	25	17.25	3	23	22.25	3	24	30	36

MINIMUM LAP LENGTHS (L):
A # 5 BARS: L = 27 INCHES
B # 6 BARS: L = 32 INCHES
C # 8 BARS: L = 32 INCHES

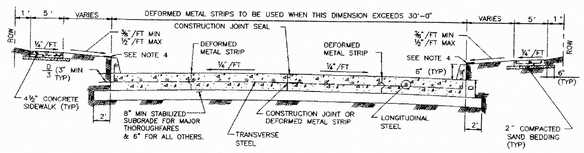

TYPICAL SINGLE ROADWAY SECTION FOR CONCRETE PAVEMENT WITH CURBS

CITY OF HOUSTON
DEPARTMENT OF PUBLIC WORKS AND ENGINEERING

CONCRETE PAVEMENT DETAILS

(NOT TO SCALE)

APPROVED BY: CITY ENGINEER | APPROVED BY: DIRECTOR OF PUBLIC WORKS AND ENGINEERING

EFF DATE:JULY-01-2009 | DWG NO: 02751-01

NOTES:

1. LOCATE FIRE HYDRANTS AT PCs OF THE INTERSECTION CURB RADIUS, 3 FEET BEHIND CURB OR PROJECTED FUTURE CURB.
2. ON OPEN-DITCH ROADWAYS, SET THE FIRE HYDRANTS WITHIN 3 FEET OF RIGHTS-OF-WAY LINES.
3. THE FIRE HYDRANT STEAMER NOZZLE SHALL FACE THE STREET.
4. LOCATE HYDRANT VALVE IMMEDIATELY ADJACENT TO WATER LINE.

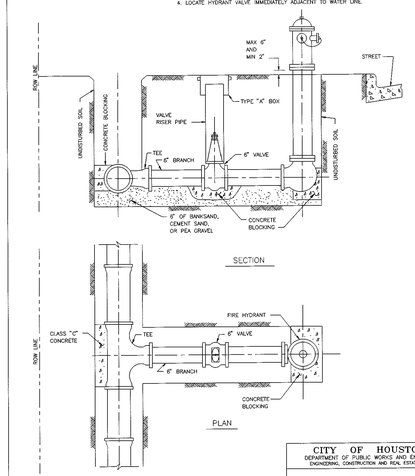

CITY OF HOUSTON
DEPARTMENT OF PUBLIC WORKS AND ENGINEERING
ENGINEERING, CONSTRUCTION AND REAL ESTATE DIVISION

STANDARD FIRE HYDRANT DETAIL

(NOT TO SCALE)

APPROVED BY: CITY ENGINEER | APPROVED BY: DIRECTOR OF PUBLIC WORKS AND ENGINEERING

EFF DATE: OCT-01-2002 | DWG NO: 02520-01

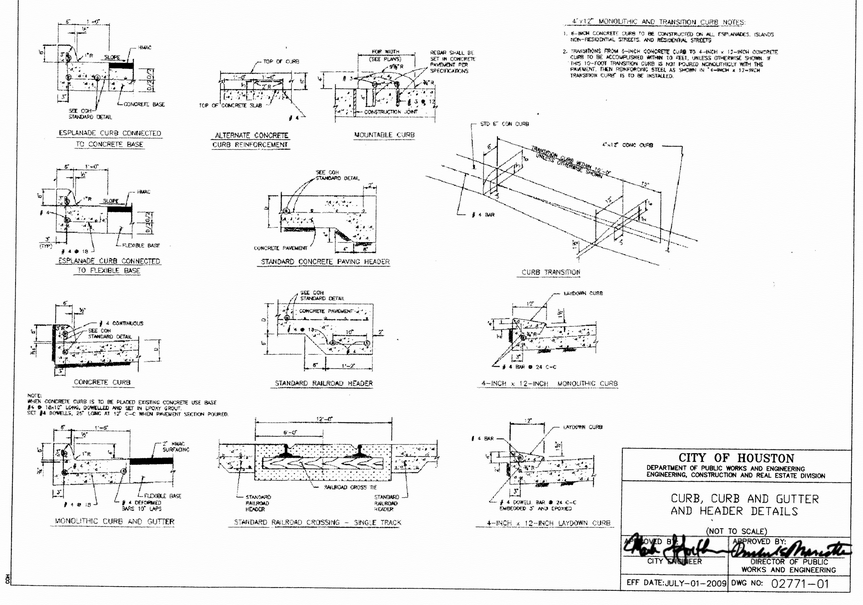

4"x12" MONOLITHIC AND TRANSITION CURB NOTES:

1. 4-INCH CONCRETE CURB TO BE CONSTRUCTED ON ALL ESPLANADES, ISLANDS NON-RESIDENTIAL STREETS, AND RESIDENTIAL STREETS
2. TRANSITIONS FROM 6-INCH CONCRETE CURB TO 4-INCH x 12-INCH CONCRETE CURB TO BE ACCOMPLISHED WITHIN 10 FEET, UNLESS OTHERWISE SHOWN. IF THIS 10-FOOT TRANSITION CURB IS NOT POURED MONOLITHICALLY WITH THE PAVEMENT, THEN REINFORCING STEEL AS SHOWN IN 1 4-INCH x 12-INCH TRANSITION CURB" IS TO BE INSTALLED.

CITY OF HOUSTON
DEPARTMENT OF PUBLIC WORKS AND ENGINEERING
ENGINEERING, CONSTRUCTION AND REAL ESTATE DIVISION

CURB, CURB AND GUTTER AND HEADER DETAILS

(NOT TO SCALE)

APPROVED BY: CITY ENGINEER | APPROVED BY: DIRECTOR OF PUBLIC WORKS AND ENGINEERING

EFF DATE:JULY-01-2009 | DWG NO: 02771-01

HOUSTON AIRPORT SYSTEM

APPROVED

HOUSTON AIRPORT SYSTEM DIRECTOR OR DESIGNATED PDC REPRESENTATIVE | DATE

JACOBS
5985 Rogerdale Road
Houston, Texas
77072

P 832.351.6000
F 281.776.2501
W www.jacobs.com

TBPE Firm #2966

iSani CONSULTANTS
3143 YELLOWSTONE BLVD
HOUSTON, TX 77054
TEL: (713) 747-2399 FAX: (713) 748-3748
TBPE FIRM REG. No. F-4575

Seals:

INTERIM REVIEW ONLY
DOCUMENT INCOMPLETE: NOT INTENDED FOR PERMIT, BIDDING OR CONSTRUCTION.
ENGINEER: VINCENT N. JACOB
P.E. SERIAL NO.: 98325
DATE: 08-04-2015

Project Client:
Houston Airport System
Project Address

Program Management Office

George Bush Intercontinental Airport (IAH)

115 Standifer St.
Humble, TX 77338

Number	Description	Date
	95% REVIEW OF BRIDGING DOCS	21 MAY 2015
	100% BRIDGING DOCUMENTS	4 AUG 2015

Project No.:

Copyright: 2015 Jacobs Engineering

TDLR #:

Drawing Sheet Title:

COH AND SITE DETAILS

Drawing Sheet Number:

C7.02

Owner's Drawing Sheet No.:

GENERAL STRUCTURAL NOTES

PART I - DESIGN CRITERIA

A. GENERAL BUILDING CODE

1. THE CONSTRUCTION DOCUMENTS ARE BASED ON THE REQUIREMENTS OF THE INTERNATIONAL BUILDING CODE 2006.

B. DEAD LOADS

1. HANGING CEILING AND MECHANICAL LOADS: AN ALLOWANCE OF 10 PSF HAS BEEN MADE FOR HANGING CEILING AND MECHANICAL EQUIPMENT LOADS SUCH AS DUCT WORK AND SPRINKLER PIPES.
   a. DESIGN LIVE LOADS ARE BASED ON THE UNIFORM LOAD LISTED BELOW:
      A. ROOFS: 20 PSF

      1) NO LIVE LOAD REDUCTION HAS BEEN APPLIED.

C. LIVE LOADS
D. REDUCTION OF LIVE LOADS:
E. WIND LOADS

1. WIND PRESSURES ARE BASED ON THE AMERICAN SOCIETY OF CIVIL ENGINEERS, MINIMUM DESIGN LOADS FOR BUILDINGS AND OTHER STRUCTURES, ASCE 7-05 AND THE FOLLOWING CRITERIA:
2. BASIC WIND SPEED: 110 MPH (3 SECOND GUST)
3. WIND IMPORTANCE FACTOR (I): 1.0
4. BUILDING CATEGORY: II
5. WIND EXPOSURE CATEGORY: C
6. INTERNAL PRESSURE COEFFICIENT: +0.18/-0.18
7. WIND PRESSURES USED IN THE DESIGN OF THE CLADDING ARE SHOWN ON THE STRUCTURAL DRAWINGS, SHEET S-100.

F. SNOW LOADS

1. SNOW LOADS ARE BASED ON THE AMERICAN SOCIETY OF CIVIL ENGINEERS, MINIMUM DESIGN LOADS FOR BUILDINGS AND OTHER STRUCTURES, ASCE 7-05 AND THE FOLLOWING CRITERIA:
   a. GROUND SNOW LOAD (PG): 0 PSF

G. SEISMIC DESIGN CRITERIA

1. THE STRUCTURE AND COMPONENTS OF THE BUILDING HAVE BEEN DESIGNED IN ACCORDANCE WITH AFOREMENTIONED BUILDING CODE WITH THE FOLLOWING CRITERIA:
   a. 0.2 SEC. SPECTRAL ACCELERATION (SS) (%G): <XX>
   b. 1 SEC. SPECTRAL ACCELERATION (S1) (%G): <XX>
   c. SITE CLASS: D
   d. F. 0.2 SEC SPECTRAL RESPONSE COEFF. (SDS) (%G): <XX>
   e. 1 SEC SPECTRAL RESPONSE COEFF. (SD1) (%G): <XX>
   f. OCCUPANCY CATEGORY: II
   g. OCCUPANCY IMPORTANCE FACTOR, I: 1.0
   h. SEISMIC DESIGN CATEGORY: A

H. BUILDING MOVEMENT AND DEFLECTIONS

1. THE BUILDING MOVEMENT SPECIFIED HEREIN IS ANTICIPATED TO OCCUR AND SHOULD BE CONSIDERED BY THE CONTRACTOR IN THE PERFORMANCE OF THE WORK.
2. SPANDREL BEAM DEFLECTIONS. THE FOLLOWING PROVISION SHOULD BE MADE FOR SUPERIMPOSED LOAD DEFLECTION OF ONE FLOOR RELATIVE TO AN ADJACENT FLOOR IN THE DESIGN, FABRICATION, AND ERECTION OF THE BUILDING CLADDING:
   a. TYPICAL SPANDREL BEAM: 3/8"

   SUPERIMPOSED LOAD DEFLECTION IS DEFINED AS ALL DEFLECTION ANTICIPATED TO OCCUR AFTER THE CLADDING HAS BEEN ERECTED. THE RELATIVE DEFLECTION ABOVE DOES NOT INCLUDE THE FLOOR DEFLECTION CAUSED BY THE WEIGHT OF THE CLADDING ITSELF OR THE DEAD LOAD DEFLECTION OF THE FLOOR FRAMING ITSELF, NOR DOES IT INCLUDE ANY ALLOWANCE FOR FABRICATION OR ERECTION TOLERANCES.
3. 4. LATERAL FRAME WIND DEFLECTION (DRIFT): THE FOLLOWING PROVISION FOR LATERAL FRAME DEFLECTION IN THE PLANE OF THE WALL OF ONE FLOOR RELATIVE TO AN ADJACENT FLOOR SHALL BE MADE IN THE DESIGN, FABRICATION AND INSTALLATION OF THE BUILDING CLADDING:
   a. TYPICAL FLOOR TO FLOOR: FLOOR HEIGHT/400
   THE DEFLECTIONS LISTED ABOVE ARE BASED ON WIND LOADS WITH A 10-YEAR MEAN RECURRENCE INTERVAL.

I. TEXAS ARCHITECTURAL BARRIER ACT STANDARD

1. THE STRUCTURAL STRENGTH OF GRAB BARS, TUB AND SHOWER SEATS, FASTENERS, AND MOUNTING DEVICES SHALL MEET THE FOLLOWING SPECIFICATION:
   a. BENDING STRESS IN A GRAB BAR OR SEAT INDUCED BY THE MAXIMUM BENDING MOMENT FROM THE APPLICATION OF 250 LBF SHALL BE LESS THAN THE ALLOWABLE STRESS FOR THE MATERIAL OF THE GRAB BAR OR SEAT.
   b. SHEAR STRESS INDUCED IN A GRAB BAR OR SEAT BY THE APPLICATION OF 250 LBF SHALL BE LESS THAN THE ALLOWABLE SHEAR STRESS FOR THE MATERIAL OF THE GRAB BAR OR SEAT. IF THE CONNECTION BETWEEN THE GRAB BAR OR SEAT AND ITS MOUNTING BRACKET OR OTHER SUPPORT IS CONSIDERED TO BE FULLY RESTRAINED, THEN DIRECT AND TORSIONAL SHEAR STRESSES SHALL BE TOTALED FOR THE COMBINED SHEAR STRESS, WHICH SHALL NOT EXCEED THE ALLOWABLE SHEAR STRESS.
   c. SHEAR FORCE INDUCED IN A FASTENER OR MOUNTING DEVICE FROM THE APPLICATION OF 250 LBF SHALL BE LESS THAN THE ALLOWABLE LATERAL LOAD OF EITHER THE FASTENER OR MOUNTING DEVICE OR THE SUPPORTING STRUCTURE, WHICHEVER IS THE SMALLER ALLOWABLE LOAD.
   d. TENSILE FORCE INDUCED IN A FASTENER BY A DIRECT TENSION FORCE OF 250 LBF PLUS THE MAXIMUM MOMENT FROM THE APPLICATION OF 250 LBF SHALL BE LESS THAN THE ALLOWABLE WITHDRAWAL LOAD BETWEEN THE FASTENER AND THE SUPPORTING STRUCTURE.
   e. GRAB BARS SHALL NOT ROTATE WITHIN THEIR FITTINGS.

J. HANDRAILS AND GUARDS

1. THE HANDRAIL ASSEMBLIES AND GUARDS SHALL BE DESIGNED FOR 50 PLF OR A CONCENTRATED LOAD OF 200 POUNDS AT ANY POINT APPLIED IN ANY DIRECTION AT THE TOP AND TO TRANSFER THIS LOAD THROUGH THE SUPPORTS TO THE STRUCTURE. THESE LOADS NEED NOT BE ASSUMED TO ACT CONCURRENTLY.

K. ROOFTOP EQUIPMENT ANCHORAGE

1. ALL ROOF TOP EQUIPMENT CURBS, ROOF TOP MECHANICAL EQUIPMENT, EQUIPMENT TIE DOWNS, AND CONNECTIONS OF ALL EQUIPMENT TO BUILDING STRUCTURE FOR WIND LOADING ARE TO BE DESIGNED AND ENGINEERED BY A REGISTERED SPECIALTY ENGINEER RETAINED BY THE MECHANICAL EQUIPMENT SUPPLIER. SIGNED AND SEALED DRAWINGS AND CALCULATIONS ARE TO BE SUBMITTED TO THE ENGINEER OF RECORD FOR REVIEW AND APPROVAL. THE EQUIPMENT MANUFACTURER SHALL PROVIDE THE ATTACHMENT OF THE UNIT TO THE STRUCTURE AND SUBMIT TO THE ENGINEER LOADS, LOCATIONS, AND METHODS OF ATTACHMENT. THE STRUCTURAL ENGINEER WILL MAKE PROVISIONS IN THE DESIGN OF THE PRIMARY STRUCTURAL FRAME TO ACCOMMODATE THE LOADS AND ATTACHMENTS SUBMITTED BY THE MANUFACTURER.

PART II - FOUNDATION

A. GEOTECHNICAL REPORT

1. FOUNDATION DESIGN IS BASED ON THE GEOTECHNICAL INVESTIGATION REPORT AS FOLLOWS "PROGRAM MANAGEMENT OFFICE AT IAH, GEORGE BUSH INTERCONTINENTAL AIRPORT, HOUSTON, TEXAS", MAY 4, 2015, HVJ ASSOCIATES PROJECT NO. HG1213270.
2. THE GEOTECHNICAL REPORT IS AVAILABLE TO THE GENERAL CONTRACTOR UPON REQUEST TO THE OWNER. THE INFORMATION INCLUDED THEREIN MAY BE USED BY THE GENERAL CONTRACTOR FOR HIS GENERAL INFORMATION ONLY. THE ARCHITECT AND ENGINEER WILL NOT BE RESPONSIBLE FOR THE ACCURACY OR APPLICABILITY OF SUCH DATA THEREIN.

B. DEEP FOUNDATION TYPE

1. DRILLED PIER FOUNDATION:
   a. DESIGN PRESSURES
      1) ULTIMATE TIP RESISTANCE: SEE DRILLED SHAFT CAPACITY CURVES
      2) ULTIMATE SKIN FRICTION: SEE DRILLED SHAFT CAPACITY CURVES

C. SHALLOW FOUNDATION TYPE
1. GRADE BEAMS:
   a. GRADE BEAM SIDES. EXCEPT AS NOTED ON THE DRAWINGS, NON-EXPOSED GRADE BEAM SIDES MAY BE EARTH FORMED.
   b. BAR SUPPORTS FOR GRADE BEAM CAGES. GRADE BEAM BOTTOM STEEL SHALL BE CHAIRED AT 5'-0" MAXIMUM CENTERS USING BEAM BOLSTERS PROVIDING 3" BOTTOM COVER TO REINFORCING STEEL. BEAM BOLSTERS USED SHALL BE DESIGNED AND MANUFACTURED FOR SUPPORT ON SOIL.

D. CONSTRUCTION DEWATERING

1. THE CONTRACTOR SHALL DETERMINE THE EXTENT OF CONSTRUCTION DEWATERING REQUIRED FOR THE EXCAVATION. THE CONTRACTOR SHALL SUBMIT TO THE GEOTECHNICAL ENGINEER FOR REVIEW THE PROPOSED PLAN FOR CONSTRUCTION DEWATERING, PRIOR TO BEGINNING THE EXCAVATION.

PART III - REINFORCED CONCRETE

A. CLASSES OF CONCRETE

1. ALL CONCRETE SHALL CONFORM TO THE REQUIREMENTS OF THE "CLASSES OF CONCRETE MATRIX" ON SHEET S-3XX UNLESS NOTED OTHERWISE ON THE DRAWINGS.

B. HORIZONTAL CONSTRUCTION JOINTS IN CONCRETE POURS

1. THERE SHALL BE NO HORIZONTAL CONSTRUCTION JOINTS IN ANY CONCRETE POURS UNLESS SHOWN ON THE DRAWINGS. THE ARCHITECT/ENGINEER SHALL APPROVE ALL DEVIATIONS OR ADDITIONAL JOINTS IN WRITING.

C. REINFORCING STEEL

1. ALL REINFORCING STEEL SHALL BE ASTM A 615 GRADE 60 UNLESS NOTED OTHERWISE ON THE DRAWINGS OR IN THESE NOTES.
2. DEFORMED BAR ANCHORS: AWS D1.1 TYPE C (TABLE 7.1) STUDS MANUFACTURED IN CONFORMANCE WITH SPECIFICATION ASTM A 496 WITH A MINIMUM YIELD STRENGTH 70,000 PSI. REINFORCING BARS SHALL NOT BE SUBSTITUTED FOR DEFORMED BAR ANCHORS.
3. HEADED STUD ANCHORS FOR EMBEDDED PLATES: AWS D1.1 TYPE A STUDS MANUFACTURED IN CONFORMANCE WITH SPECIFICATION ASTM A 108 WITH A MINIMUM TENSILE STRENGTH OF 61,000 PSI.
4. SMOOTH WELDED WIRE REINFORCEMENT: ASTM A 185, YIELD STRENGTH 65,000 PSI.

D. PLACEMENT OF WELDED WIRE REINFORCEMENT

1. WHEREVER WELDED WIRE REINFORCEMENT IS SPECIFIED AS REINFORCEMENT, IT SHALL BE CONTINUOUS ACROSS THE ENTIRE CONCRETE SURFACE AND NOT INTERRUPTED BY BEAMS OR GIRDERS AND PROPERLY LAPPED PER ACI 318, 12.18 AND 12.19.

E. REINFORCEMENT IN TOPPING SLABS

1. PROVIDE MINIMUM REINFORCEMENT AS NOTED BELOW IN ALL TOPPING SLABS UNLESS SPECIFIED OTHERWISE ON THE DRAWINGS.
   a. WELDED SMOOTH WIRE REINFORCEMENT 6X6-W2.9XW2.9.

F. REINFORCING STEEL COVERAGE

1. REINFORCING STEEL COVERAGE SHOULD CONFORM TO THE REQUIREMENTS SPECIFIED IN DETAILS LABELED "TYPICAL CLEAR CONCRETE COVER" ON SHEETS IN S-300 SERIES UNLESS NOTED OTHERWISE ON THE DRAWINGS. COVER SPECIFIED SHALL BE CONSIDERED MINIMUMS THAT MAY REQUIRE INCREASING WHERE REINFORCING STEEL INTERSECTS FOR DIFFERENT MEMBER TYPES. COVER IN STRUCTURAL MEMBERS NOT SPECIFIED IN THE DETAILS SHALL CONFORM TO THE REQUIREMENTS OF ACI 318 UNLESS SPECIFIED OTHERWISE ON THE DRAWINGS. THE REINFORCING STEEL DETAILER SHALL ADJUST REINFORCING STEEL CAGE SIZES AT INTERSECTING STRUCTURAL MEMBERS AS REQUIRED TO ALLOW CLEARANCE FOR INTERSECTING REINFORCING BAR LAYERS WITH MINIMUM SPECIFIED COVER.

G. SPLICES AND HOOKS IN REINFORCING STEEL

1. SPLICE LOCATION AND TYPE AND HOOKS FOR UNSCHEDULED BEAMS, SLABS AND WALLS:
   a. BEAMS AND SLABS. UNSCHEDULED BEAMS AND SLABS, INCLUDING GRADE BEAMS, SHALL HAVE CONTINUOUS TOP BARS LAPPED AT MIDSPAN BETWEEN SUPPORTS WITH A CLASS B TENSION SPLICE. BOTTOM BARS SHALL BE LAPPED AT THE SUPPORTS WITH A CLASS B TENSION SPLICE. ALL BEAM BARS SHALL BE HOOKED AT DISCONTINUOUS END, UNLESS NOTED OTHERWISE.

PART IV - STRUCTURAL STEEL

A. MATERIAL

1. HOT ROLLED STRUCTURAL MEMBERS: ALL HOT ROLLED STEEL PLATES, SHAPES, SHEET PILING, AND BARS SHALL BE NEW STEEL CONFORMING TO ASTM SPECIFICATION A 6.
2. ASTM SPECIFICATION AND GRADE: CLEARLY MARK THE GRADE OF STEEL ON EACH PIECE, WITH A DISTINGUISHING MARK VISIBLE FROM FLOOR SURFACES, FOR THE PURPOSE OF FIELD INSPECTION OF PROPER GRADE OF STEEL. UNLESS NOTED OTHERWISE ON THE DRAWINGS, STRUCTURAL STEEL SHALL BE AS FOLLOWS:
   a. W- AND WT-SHAPES: ASTM A 992.
   b. W-SHAPE BEAMS AND COLUMNS: ASTM A 992.
   c. M- AND S-SHAPES: ASTM A 36 OR ASTM A572, GRADE 50.
   d. C-SHAPES: ASTM A 36 OR ASTM A572, GRADE 50.
   e. L-SHAPES: ASTM A 36 OR ASTM A572, GRADE 50.
   f. ROUND HSS: ASTM A 500, GRADE B (FY=42 KSI).
   g. RECTANGULAR HSS: ASTM A 500, GRADE B (FY=46 KSI).
   h. STEEL PIPES: ASTM A 53 (TYPES E OR S), GRADE B.
   i. BASE PLATES: ALL BASE PLATES SHALL CONFORM TO ASTM A 36 UNLESS NOTED OTHERWISE ON THE DRAWINGS.
   j. EDGE ANGLES, BENT PLATES, ANGLE HANGERS, AND ANGLE KICKERS: ASTM A 36.
   k. CONNECTION MATERIAL:
      1) BEAM COLUMN CONTINUITY PLATES AND DOUBLER PLATES: ASTM A 572, GRADE 50.
      2) ALL CONNECTION MATERIAL, EXCEPT AS NOTED OTHERWISE HEREIN OR ON THE DRAWINGS, INCLUDING BEARING PLATES, GUSSET PLATES, STIFFENER PLATES, FILLER PLATES, ANGLES, ETC. SHALL CONFORM TO ASTM A 36 UNLESS A HIGHER GRADE OF STEEL IS REQUIRED BY STRENGTH AND PROVIDED THE RESULTING SIZES ARE COMPATIBLE WITH THE CONNECTED MEMBERS.

B. CONNECTIONS

1. CONNECTION DETAILS NOT COMPLETELY DETAILED ON THE DRAWINGS INCLUDING MATERIAL GRADE AND SIZES, WELD SIZES, AND NUMBER OF BOLTS SHALL BE DESIGNED BY THE CONTRACTOR PER THE SPECIFICATIONS. CONCEPTUAL CONNECTION DETAILS WITH THE REQUIRED MEMBER DESIGN FORCES ARE SHOWN ON THE DRAWINGS AND ARE APPLICABLE TO ALL CONNECTIONS NOT DESIGNED AND FULLY DETAILED ON THE DRAWINGS. THE CONCEPTUAL DETAILS ARE PROVIDED ONLY TO INDICATE THE CONNECTION TYPE REQUIRED AND MAY NOT FULLY REPRESENT THE COMPLEXITY OF THE CONNECTION AS REQUIRED BY THE FINAL CONNECTION DESIGN FOR THE FORCES THEY MUST RESIST. ADDITIONAL CONNECTION ELEMENTS MAY NOT BE SPECIFICALLY SHOWN IN THE CONCEPTUAL DETAILS BUT MAY BE REQUIRED BY THE FINAL CONNECTION DESIGN, SUCH AS STIFFENER PLATES, DOUBLER PLATES, SUPPLEMENT/ REINFORCING PLATES OR OTHER CONNECTION MATERIAL. THE FABRICATOR IS RESPONSIBLE FOR ENGAGING THE SERVICES OF A CONNECTION SPECIALTY ENGINEER TO PREPARE A FINAL CONNECTION DESIGN FOR SUBMISSION THAT MEETS THE REQUIREMENTS OF THE CONCEPTUAL CONNECTION DETAILS AND RESISTS THE INDICATED DESIGN FORCES.
2. REFER TO THE SPECIFICATIONS FOR ADDITIONAL REQUIREMENTS.
3. REACTIONS NOTED ON THE PLANS ARE BASED ON FACTORED LOADS AND ARE INTENDED FOR USE WITH THE LOAD AND RESISTANCE FACTOR DESIGN METHOD.

C. STRUCTURAL BOLTS AND THREADED FASTENERS

1. A 325 BOLTS: ALL BOLTS IN STRUCTURAL CONNECTIONS SHALL CONFORM TO ASTM A 325 TYPE 1, UNLESS INDICATED OTHERWISE ON THE DRAWINGS.
2. THREADED ROUND STOCK: THREADED RODS SHALL CONFORM TO:
   a. ASTM A 36.
   b. ASTM A 572 GRADE 50 (TO 2 INCHES IN DIAMETER).

D. WELDING

1. UNLESS NOTED OTHERWISE, ELECTRODES FOR WELDING SHALL CONFORM TO E70XX (SMAW), F7XX-EXXX (SAW), ER70S-X (GMAW), OR E7XT-X (FCAW).
2. ELECTRODES FOR GRADE 60 OR GRADE 65 MATERIAL SHALL CONFORM TO E80XX (SMAW), F8XX-EXX-XX (SAW), ER80S-X (GMAW), OR E8XT-X (FCAW).

E. ANCHOR RODS

1. UNLESS INDICATED OTHERWISE IN THE COLUMN SCHEDULE OR ON THE DRAWINGS, ANCHOR RODS SHALL CONFORM TO ASTM F 1554 GRADE 55 (WITH SUPPLEMENTARY REQUIREMENT S1) AND THE SIZE SHALL BE 3/4" DIAMETER AND SHALL EMBED INTO THE CONCRETE FOUNDATION A DISTANCE OF 1'-0" WITH A HEAVY HEX NUT AT THE EMBEDDED END. STRIKE BOLT THREADS AT THE EMBEDDED END AT TWO PLACES BELOW THE NUT.

F. GROUT

1. GROUT BELOW STRUCTURAL STEEL BASE PLATES SHALL BE NON-METALLIC, NON-SHRINK GROUT WITH A MINIMUM STRENGTH OF 6,000 PSI WHEN BEARING ON 3,000 PSI CONCRETE OR LESS, A STRENGTH OF 8,000 PSI WHEN BEARING ON CONCRETE BETWEEN 3,000 AND 4,000 PSI, AND, UNLESS NOTED OTHERWISE ON THE DRAWINGS, A STRENGTH OF 8,000 PSI WHEN BEARING ON CONCRETE GREATER THAN 4,000 PSI.

PART V - STEEL JOISTS AND JOIST GIRDERS

A. FABRICATION AND ERECTION

1. END SUPPORTS AND END ANCHORAGE:
   a. PROVIDE STANDARD DEPTH OF BEARING FOR ALL JOISTS AND JOIST GIRDERS AS SHOWN BELOW UNLESS NOTED OTHERWISE ON THE DRAWINGS:
      1) ALL K SERIES: 2 1/2"
      2) ALL LH SERIES: 5"
   b. PROVIDE FLAT BEARING FOR ALL JOISTS AND JOIST GIRDERS UNLESS NOTED OTHERWISE ON DRAWINGS. INCREASE THE DEPTH OF THE SEAT ON THE HIGH END OF SLOPED JOISTS AS REQUIRED TO PROVIDE CLEARANCE FOR THE CONNECTION.

B. DESIGN

1. ALL JOISTS AND JOIST GIRDERS SHALL CARRY THE DESIGN LOADS AS SPECIFIED IN THE SJI LOAD TABLES AS THE MINIMUM REQUIREMENT. ADDITIONALLY, THE JOISTS AND JOIST GIRDERS SHALL BE DESIGNED TO CARRY ANY OTHER LOAD TYPES AND PATTERNS AS INDICATED ON THE DRAWINGS.
2. STEEL JOISTS,, BRIDGING, AND THEIR CONNECTIONS SHALL BE DESIGNED FOR A NET UPLIFT EQUAL TO THE UPWARD COMPONENT AND CLADDING WIND PRESSURES SHOWN ON THE STRUCTURAL DRAWINGS MINUS 5 PSF OF DEAD LOAD.
3. JOIST GIRDERS SHALL BE DESIGNED FOR THE UPLIFT CONCENTRATED LOADS SHOWN ON THE DRAWINGS.

PART VI - STEEL DECKS

A. ROOF DECK

1. SCHEDULE:

   LOCATION DEPTH GAGE TYPE
HIGH ROOF 1.5" 22 WR

   NOTES:
   NR: NARROW RIB, TYPE A
   IR: INTERMEDIATE RIB, TYPE F
   WR: WIDE RIB, TYPE B
   3DR 3 INCH, DEEP RIB, TYPE N

2. ATTACHMENT OF DECK:
   a. MINIMUM ATTACHMENT AT SUPPORTS: STEEL DECK UNITS SHALL BE FASTENED TO ALL SUPPORT MEMBERS AT EACH RIB (36/7) WITH 3/4" DIAMETER PUDDLE WELDS, UNLESS NOTED OTHERWISE. AT MEMBERS PARALLEL TO DECK SPAN, SPACING OF FASTENERS SHALL BE 6".
   b. MINIMUM ATTACHMENT AT SIDE LAPS: SIDE LAPS OF ADJACENT UNITS SHALL BE FASTENED BY WELDING, SHEET METAL SCREWS, OR BUTTON PUNCHING AT A MAXIMUM OF 12", UNLESS NOTED OTHERWISE.
3. FLAT, RIDGE, AND VALLEY PLATES:
   UNLESS NOTED OTHERWISE, CONTRACTOR SHALL PROVIDE FLAT PLATES (20 GAGE MINIMUM) AT ALL LOCATIONS WHERE ROOF DECK CHANGES DIRECTION AND RIDGE OR VALLEY PLATES (20 GAGE MINIMUM) AT ALL LOCATIONS WHERE ROOF SLOPE EXCEEDS 1/2" PER FOOT.

PART VII - STRUCTURAL OBSERVATION

A. A PRE-CONSTRUCTION MEETING INCLUDING THE ENGINEER RESPONSIBLE FOR THE STRUCTURAL OBSERVATION, THE STRUCTURAL OBSERVER, THE CONTRACTOR, AFFECTED SUBCONTRACTORS, AND DEPUTY INSPECTORS SHALL BE HELD TO REVIEW THE APPROVED STRUCTURAL PLANS AND AGREE UPON INSPECTION SCOPE AND SCHEDULE. THE OWNER OR OWNER'S REPRESENTATIVE SHALL COORDINATE AND CALL THE MEETING, AND THE STRUCTURAL OBSERVER SHALL PRESIDE OVER THE MEETING.

B. THE PURPOSE OF THE PRECONSTRUCTION MEETING SHALL BE TO IDENTIFY THE MAJOR STRUCTURAL ELEMENTS AND CONNECTIONS THAT AFFECT THE VERTICAL AND LATERAL LOAD SYSTEMS OF THE STRUCTURE AND TO REVIEW SCHEDULING OF THE REQUIRED OBSERVATIONS. A RECORD OF THE MEETING SHALL BE INCLUDED IN THE FIRST OBSERVATION REPORT SUBMITTED TO THE SUPERINTENDENT OF BUILDING.

C. OBSERVED DEFICIENCIES SHALL BE REPORTED IN WRITING TO THE OWNER'S REPRESENTATIVE, REGISTERED DEPUTY INSPECTOR, CONTRACTOR AND THE SUPERINTENDENT OF BUILDING.

D. UPON THE FORM PRESCRIBED BY THE SUPERINTENDENT OF BUILDING, THE STRUCTURAL OBSERVER SHALL SUBMIT TO THE SUPERINTENDENT OF BUILDING A WRITTEN STATEMENT AT EACH SIGNIFICANT CONSTRUCTION STAGE STATING THAT THE SITE VISITS HAVE BEEN MADE AND IDENTIFYING ANY REPORTED DEFICIENCIES, WHICH, TO THE BEST OF THE STRUCTURAL OBSERVER'S KNOWLEDGE, HAVE NOT BEEN RESOLVED.

E. A FINAL REPORT BY THE STRUCTURAL OBSERVER, WHICH STATES THAT ALL OBSERVED DEFICIENCIES HAVE BEEN RESOLVED, IS REQUIRED BEFORE ACCEPTANCE OF THE WORK BY THE SUPERINTENDENT OF BUILDING.

F. AT THE CONCLUSION OF THE WORK INCLUDED IN THE PERMIT, THE STRUCTURAL OBSERVER SHALL SUBMIT TO THE SUPERINTENDENT OF BUILDING A WRITTEN STATEMENT THAT THE SITE VISITS HAVE BEEN MADE AND SHALL IDENTIFY ANY REPORTED DEFICIENCIES THAT, TO THE BEST OF THE STRUCTURAL OBSERVER'S KNOWLEDGE, HAVE NOT BEEN RESOLVED.

G. THE STRUCTURAL OBSERVER SHALL PERFORM STRUCTURAL OBSERVATION IN ACCORDANCE WITH THE STRUCTURAL OBSERVATION REPORT FORM AND THE APPROVED PLANS. UPON COMPLETION OF STRUCTURAL OBSERVATION, THE STRUCTURAL OBSERVER OF RECORD SHALL COMPLETE THE OBSERVATION FORM.

H. STRUCTURAL OBSERVATION IS THE VISUAL OBSERVATION OF THE STRUCTURAL SYSTEM, FOR GENERAL CONFORMANCE TO THE APPROVED PLANS AND SPECIFICATIONS, AT SIGNIFICANT CONSTRUCTION STAGES AND AT COMPLETION OF THE STRUCTURAL SYSTEM, WHICH INCLUDES THE LATERAL AND GRAVITY LOAD PATHS.

I. STRUCTURAL OBSERVATION SHALL BE PERFORMED BY THE ENGINEER RESPONSIBLE FOR THE STRUCTURAL DESIGN, OR A LICENSED ENGINEER OR ARCHITECT DESIGNATED BY THE SAID ENGINEER.

J. STRUCTURAL OBSERVATION DOES NOT INCLUDE OR WAIVE THE RESPONSIBILITY FOR THE INSPECTION REQUIRED BY THE BUILDING CODE.

PART VIII - SPECIAL INSPECTIONS

A. THE OWNER'S TESTING LABORATORY SHALL PROVIDE SPECIAL INSPECTION SERVICES IN ACCORDANCE WITH THE INTERNATIONAL BUILDING CODE FOR THE FOLLOWING ITEMS.

1. STEEL CONSTRUCTION:
   a. ALL FIELD WELDING
   b. HIGH-STRENGTH BOLTING
   c. INSPECTION OF STRUCTURAL STEEL, BOLTING, WELDING MATERIAL
   d. WELDING OF STRUCTURAL STEEL
2. CONCRETE CONSTRUCTION:
   a. BOLTS INSTALLED IN CONCRETE
   b. CONCRETE WORK
   c. INSPECTION OF REINFORCING STEEL PLACING
   d. REINFORCING STEEL PLACEMENT
3. SOILS:
   a. PREPARED EARTH FILL
4. DEEP FOUNDATIONS:
   a. PIER FOUNDATIONS
5. SPRAYED FIRE-RESISTANT MATERIALS
6. WIND REQUIREMENTS:
   a. MAIN WINDFORCE-RESISTING SYSTEMS
   b. ROOF CLADDING
   c. WINDFORCE-RESISTING SYSTEM CONNECTIONS TO FOUNDATION
   d. WIND-RESISTING COMPONENTS

B. STATEMENT OF SPECIAL INSPECTIONS

1. SPECIAL INSPECTION IS REQUIRED FOR THE ITEMS LISTED ABOVE. REFER TO SPECIFICATION SECTION 014529 FOR TYPE AND EXTENT OF EACH SPECIAL INSPECTION AND EACH TEST. THE SPECIFICATION ALSO INDICATES WHETHER CONTINUOUS OR PERIODIC INSPECTION IS REQUIRED FOR THE ITEMS LISTED ABOVE ADDITIONAL INFORMATION.

PART IX - SUBMITTALS

A. SUBMITTAL LIST AND SCHEDULE

1. THE GENERAL CONTRACTOR SHALL PREPARE A DETAILED LIST AND SCHEDULE OF ALL SUBMITTAL ITEMS TO BE SENT TO THE STRUCTURAL ENGINEER PRIOR TO THE START OF CONSTRUCTION. THIS LIST SHALL BE UPDATED AND REVISED AND KEPT CURRENT AS THE JOB PROGRESSES. THE SUBMITTAL LIST SHALL BE ORGANIZED AS SHOWN BELOW:
   a. SHOP DRAWINGS
   b. DESIGN CALCULATIONS
   c. PRODUCT DATA, CERTIFICATES, REPORTS, AND OTHER LITERATURE

B. SUBMITTALS TO BE PROVIDED TO STRUCTURAL ENGINEER

1. STRUCTURAL SUBMITTALS: IN ADDITION TO THE SUBMITTALS REQUIRED BY THE STRUCTURAL SPECIFICATIONS, THE FOLLOWING SUBMITTALS SHALL BE PROVIDED:
   a. LAYOUT OF EMBEDDED ITEMS (PLATES, ANGLES, BOLTS, ETC.) OR ITEMS ATTACHED TO THE STRUCTURAL FRAME FOR BUILDING CLADDING ATTACHMENT OR FOR ATTACHMENT OF OTHER ITEMS.
   b. LAYOUT OF GARAGE CABLE VEHICLE BARRIERS.
   c. LAYOUT OF MECHANICAL, ELECTRICAL, AND PLUMBING OPENINGS IN FLAT SLABS.
   d. LAYOUT OF PENETRATIONS IN BEAMS AND JOISTS.
2. DEFERRED SUBMITTALS:
   a. THE FOLLOWING ITEMS ARE CONSIDERED DEFERRED SUBMITTALS BY THE REGISTERED DESIGN PROFESSIONAL IN RESPONSIBLE CHARGE:
      1) EXTERIOR WINDOW WALL SYSTEM (S&S, REC)
      2) FORMWORK, SHORING, AND BACKSHORING (S&S, REC)
      3) METAL BUILDING (S&S)
      4) METAL FABRICATIONS, RAILINGS, AND GRATINGS (S&S)
      5) STEEL JOISTS AND JOIST GIRDERS (S&S)
      6) STEEL STAIRS (S&S)
      7) STRUCTURAL STEEL CONNECTIONS (S&S)
      8) TILT-UP CONCRETE PANELS (S&S)

   NOTES:

   (S&S) ITEMS MARKED THUS SHALL HAVE THE SHOP DRAWINGS AND DELEGATED DESIGN SUBMITTALS (INCLUDING CALCULATIONS) SEALED PER THE PROJECT SPECIFICATIONS BY AN ENGINEER REGISTERED IN THE STATE WHERE THE PROJECT IS LOCATED.

   (REC) ITEMS MARKED THUS SHALL BE SUBMITTED TO ENGINEER FOR RECORD ONLY AND WILL NOT HAVE THE ENGINEER'S SHOP DRAWING STAMP AFFIXED.

   b. DOCUMENTS FOR DEFERRED SUBMITTAL ITEMS SHALL BE SUBMITTED TO THE REGISTERED DESIGN PROFESSIONAL AND SHALL BE FORWARDED TO THE BUILDING OFFICIAL.
   c. DEFERRED SUBMITTAL ITEMS SHALL NOT BE INSTALLED UNTIL THE DEFERRED SUBMITTAL DOCUMENTS HAVE BEEN APPROVED BY THE BUILDING OFFICIAL.
3. SUBMITTALS WITH IMPACT TO STRUCTURE:
   a. ELEVATORS
   b. MECHANICAL EQUIPMENT WEIGHTS
4. SUBMITTAL REQUIREMENTS:
   a. ALL SHOP DRAWINGS MUST BE REVIEWED AND ELECTRONICALLY STAMPED BY THE GENERAL CONTRACTOR PRIOR TO SUBMITTAL.
   b. CONTRACTOR SHALL PROVIDE THE SUBMITTAL IN ELECTRONIC PORTABLE DOCUMENT FORMAT (PDF) PER THE SPECIFICATIONS.
   c. THE OMISSION FROM THE SHOP DRAWINGS OF ANY MATERIALS REQUIRED BY THE CONTRACT DOCUMENTS TO BE FURNISHED SHALL NOT RELIEVE THE CONTRACTOR OF THE RESPONSIBILITY OF FURNISHING AND INSTALLING SUCH MATERIALS, REGARDLESS OF WHETHER THE SHOP DRAWINGS HAVE BEEN REVIEWED AND APPROVED.

C. REPRODUCTION

1. THE USE OF ELECTRONIC FILES OR REPRODUCTIONS OF THESE CONTRACT DOCUMENTS BY ANY CONTRACTOR, SUBCONTRACTOR, ERECTOR, FABRICATOR, OR MATERIAL SUPPLIER IN LIEU OF PREPARATION OF SHOP DRAWINGS SIGNIFIES THEIR ACCEPTANCE OF ALL INFORMATION SHOWN HEREON AS CORRECT, AND OBLIGATES THEMSELVES TO ANY JOB EXPENSE, REAL OR IMPLIED, ARISING DUE TO ANY ERRORS THAT MAY OCCUR HEREON.

PART X - MISCELLANEOUS

A. CONTRACT DOCUMENTS

1. IT IS THE RESPONSIBILITY OF THE GENERAL CONTRACTOR TO OBTAIN ALL CONTRACT DOCUMENTS AND LATEST ADDENDA AND TO SUBMIT SUCH DOCUMENTS TO ALL SUBCONTRACTORS AND MATERIAL SUPPLIERS PRIOR TO THE SUBMITTAL OF SHOP DRAWINGS, FABRICATION OF ANY STRUCTURAL MEMBERS, AND ERECTION IN THE FIELD.
2. THE CONTRACT STRUCTURAL DRAWINGS AND SPECIFICATIONS REPRESENT THE FINISHED STRUCTURE, AND, EXCEPT WHERE SPECIFICALLY SHOWN, DO NOT INDICATE THE METHOD OR MEANS OF CONSTRUCTION. THE CONTRACTOR SHALL SUPERVISE AND DIRECT THE WORK AND SHALL BE SOLELY RESPONSIBLE FOR ALL CONSTRUCTION MEANS, METHODS, PROCEDURES, TECHNIQUES, AND SEQUENCE.
3. OPENINGS THROUGH FLOORS, ROOFS, AND WALLS FOR DUCTS, PIPING, AND/OR CONDUIT SHALL BE COORDINATED BY THE CONTRACTOR. CONTRACTOR SHALL VERIFY SIZES AND LOCATIONS OF HOLES AND OPENINGS WITH THE MECHANICAL, ELECTRICAL, PLUMBING, AND FIRE PROTECTION DRAWINGS AND THE RESPECTIVE SUBCONTRACTORS.
4. REFER TO DRAWINGS OTHER THAN STRUCTURAL FOR COMPLETE INFORMATION INCLUDING: TYPES OF FLOOR SLAB FINISHES AND THEIR LOCATIONS, FLOOR SLAB DEPRESSIONS AND CURBS, OPENINGS IN STRUCTURAL WALLS, ROOFS AND FLOORS REQUIRED BY ARCHITECTURAL AND MEP FEATURES, STAIRS, RAMPS, ETC.
5. WHERE MEMBER LOCATIONS ARE NOT SPECIFICALLY DIMENSIONED, MEMBERS ARE EITHER LOCATED ON COLUMNS LINES OR ARE EQUALLY SPACED BETWEEN LOCATED MEMBERS.
6. IF CERTAIN FEATURES ARE NOT FULLY SHOWN OR SPECIFIED ON THE DRAWINGS OR IN THE SPECIFICATIONS, THEIR CONSTRUCTION SHALL BE OF THE SAME CHARACTER AS SHOWN OR SPECIFIED IN SIMILAR CONDITIONS.

B. DRAWING CONFLICTS

1. THE GENERAL CONTRACTOR SHALL COMPARE THE ARCHITECTURAL AND STRUCTURAL DRAWINGS AND REPORT ANY DISCREPANCY BETWEEN EACH SET OF DRAWINGS AND WITHIN EACH SET OF DRAWINGS TO THE ARCHITECT AND ENGINEER PRIOR TO THE FABRICATION AND INSTALLATION OF ANY STRUCTURAL MEMBERS.

C. CONFLICTS IN STRUCTURAL REQUIREMENTS

1. WHERE CONFLICT EXISTS AMONG THE VARIOUS PARTS OF THE STRUCTURAL CONTRACT DOCUMENTS, STRUCTURAL DRAWINGS, GENERAL NOTES, AND SPECIFICATIONS, THE STRICTEST REQUIREMENTS, AS INDICATED BY THE ENGINEER, SHALL GOVERN.

D. EXISTING CONDITIONS

1. WORK SHOWN ON THE DRAWINGS IS NEW, UNLESS NOTED AS EXISTING.
2. THE CONTRACTOR SHALL VERIFY THE LOCATION OF EXISTING UTILITIES PRIOR TO THE START OF CONSTRUCTION AND TAKE CARE TO PROTECT EXISTING UTILITIES THAT ARE TO REMAIN IN SERVICE.

E. RESPONSIBILITY OF THE CONTRACTOR FOR STABILITY OF THE STRUCTURE DURING CONSTRUCTION

1. ALL STRUCTURAL ELEMENTS OF THE PROJECT HAVE BEEN DESIGNED BY THE STRUCTURAL ENGINEER TO RESIST THE REQUIRED CODE VERTICAL AND LATERAL FORCES THAT COULD OCCUR IN THE FINAL COMPLETED STRUCTURE ONLY. THE ABILITY OF THE STRUCTURAL FRAME TO RESIST THE REQUIRED CODE FORCES DERIVES FROM THE COMPLETE INSTALLATION OF THE LATERAL FORCE RESISTING SYSTEMS AND DIAPHRAGMS DESCRIBED BELOW. IT IS THE RESPONSIBILITY OF THE CONTRACTOR TO PROVIDE ALL REQUIRED BRACING DURING CONSTRUCTION TO MAINTAIN THE STABILITY AND SAFETY OF ALL STRUCTURAL ELEMENTS DURING THE CONSTRUCTION PROCESS UNTIL THE LATERAL-LOAD RESISTING OR STABILITY-PROVIDING SYSTEM IS COMPLETELY INSTALLED AND ALL DESIGNATED CONCRETE ELEMENTS (IF ANY) HAVE REACHED A MINIMUM OF 75% OF THEIR DESIGN STRENGTH. THE REQUIRED STRUCTURAL ELEMENTS ARE:
   a. STEEL FRAMES:
      1) LATERAL-FORCE RESISTING SYSTEM
         a) STEEL MOMENT FRAMES, INDICATED ON THE DRAWINGS AS A SERIES OF STEEL BEAMS THAT ARE RIGIDLY CONNECTED (FIXED JOINTS) TO COLUMNS.
         b) STEEL BRACED FRAMES, INDICATED ON THE DRAWINGS AS A SERIES OF VERTICALLY ORIENTED STEEL TRUSSES CONSISTING OF STEEL DIAGONAL MEMBERS, STEEL COLUMNS AND CONNECTING STEEL FLOOR BEAMS.
      2). DIAPHRAGM
         a) A STEEL DECK DIAPHRAGM THAT IS COMPLETELY ATTACHED TO ALL ROOF MEMBERS ACCORDING TO SPECIFICATIONS AND THAT CREATES A CONTINUOUS ELEMENT LINKING THE LATERAL-FORCE RESISTING SYSTEM TO ALL OTHER COLUMNS.
         b) A SYSTEM OF HORIZONTAL (IN-PLANE) BRACING CONSISTING OF DIAGONALS, CHORDS, AND DRAG/COLLECTOR ELEMENTS THAT CREATES A CONTINUOUS ELEMENT LINKING THE LATERAL-FORCE RESISTING SYSTEM.

F. RESPONSIBILITY OF THE CONTRACTOR FOR CONSTRUCTION LOADS

1. THE STRUCTURE HAS BEEN DESIGNED FOR THE LOADS IDENTIFIED WITHIN THESE STRUCTURAL DRAWINGS THAT ARE ANTICIPATED TO BE APPLIED TO THE FINAL STRUCTURE ONCE COMPLETED AND OCCUPIED. THE CONTRACTOR SHALL NOT OVERLOAD THE STRUCTURE DURING CONSTRUCTION. THE CONTRACTOR SHALL BE RESPONSIBLE FOR CHECKING THE ADEQUACY OF THE STRUCTURE TO SUPPORT ANY APPLIED CONSTRUCTION LOADS, INCLUDING THOSE DUE TO CONSTRUCTION VEHICLES OR EQUIPMENT, MATERIAL HANDLING OR STORAGE,

PART X - MISCELLANEOUS (CONTINUED)

SHORING OR RESHORING, OR ANY OTHER CONSTRUCTION ACTIVITY. THE CONTRACTOR SHALL SUBMIT CALCULATIONS SIGNED AND SEALED BY AN ENGINEER LICENSED IN THE STATE WHERE THE PROJECT IS LOCATED VERIFYING THE ADEQUACY OF THE STRUCTURE FOR ANY PROPOSED CONSTRUCTION LOADS THAT ARE IN EXCESS OF THE STATED DESIGN LOADS. THE STRUCTURAL ENGINEER IS NOT RESPONSIBLE TO DESIGN OR CHECK THE STRUCTURE FOR LOADS APPLIED TO THE STRUCTURE FOR ANY CONSTRUCTION ACTIVITY.

G. CONTRACTOR SUBSTITUTIONS

1. ANY MATERIALS OR PRODUCTS SUBMITTED FOR APPROVAL THAT ARE DIFFERENT FROM THE MATERIAL OR PRODUCTS SPECIFIED IN THE STRUCTURAL CONTRACT DOCUMENTS WILL BE APPROVED ONLY IF THE FOLLOWING CRITERIA ARE SATISFIED:
   a. A COST SAVINGS TO THE OWNER IS DOCUMENTED AND SUBMITTED WITH THE REQUEST.
   b. THE MATERIAL OR PRODUCT HAS BEEN APPROVED BY THE INTERNATIONAL CODE COUNCIL (ICC) AND THE ICC REPORT IS SUBMITTED WITH THE REQUEST.
      1) THE ICC ESR THAT IS SUBMITTED MUST REFERENCE THE BUILDING CODE UNDER WHICH THE PROJECT IS PERMITTED.
      2) ICC REPORTS THAT HAVE BEEN DISCONTINUED AT THE TIME OF PRODUCT INSTALLATION WILL NOT BE ACCEPTED.
2. SUBMITTALS NOT SATISFYING THE ABOVE CRITERIA WILL NOT BE CONSIDERED.

H. MECHANICAL EQUIPMENT WEIGHTS

1. THE GENERAL CONTRACTOR SHALL SUBMIT ACTUAL WEIGHTS OF EQUIPMENT TO BE USED IN THE PROJECT TO THE STRUCTURAL ENGINEER FOR VERIFICATION OF LOADS USED IN THE DESIGN AT LEAST THREE WEEKS PRIOR TO FABRICATION AND CONSTRUCTION OF THE SUPPORTING STRUCTURE.

I. L. THE STRUCTURAL ENGINEER'S ROLE DURING CONSTRUCTION

1. THE ENGINEER SHALL NOT HAVE CONTROL NOR CHARGE OF, AND SHALL NOT BE RESPONSIBLE FOR, CONSTRUCTION MEANS, METHODS, TECHNIQUES, SEQUENCES, OR PROCEDURES, FOR SAFETY PRECAUTIONS AND PROGRAMS IN CONNECTION WITH THE WORK, FOR THE ACTS OR OMISSION OF THE CONTRACTOR, SUBCONTRACTOR, OR ANY OTHER PERSONS PERFORMING ANY OF THE WORK, OR FOR THE FAILURE OF ANY OF THEM TO CARRY OUT THE WORK IN ACCORDANCE WITH THE CONTRACT DOCUMENTS.
2. PERIODIC SITE OBSERVATION BY FIELD REPRESENTATIVES OF HENDERSON + ROGERS, INC. IS SOLELY FOR THE PURPOSE OF BECOMING GENERALLY FAMILIAR WITH THE PROGRESS AND QUALITY OF THE WORK COMPLETED AND DETERMINING, IN GENERAL, IF THE WORK OBSERVED IS BEING PERFORMED IN A MANNER INDICATING THAT THE WORK, WHEN FULLY COMPLETED, WILL BE IN ACCORDANCE WITH THE STRUCTURAL CONTRACT DOCUMENTS. THIS LIMITED SITE OBSERVATION SHOULD NOT BE CONSTRUED AS EXHAUSTIVE OR CONTINUOUS TO CHECK THE QUALITY OR QUANTITY OF THE WORK, BUT RATHER PERIODIC IN AN EFFORT TO KEEP THE OWNER REASONABLY INFORMED ABOUT THE PROGRESS AND QUALITY OF THE PORTION OF THE STRUCTURE COMPLETED.

J. MAINTENANCE STATEMENT

1. ALL STRUCTURES REQUIRE PERIODIC MAINTENANCE TO EXTEND LIFESPAN AND TO ENSURE STRUCTURAL INTEGRITY FROM EXPOSURE TO THE ENVIRONMENT. A PLANNED PROGRAM OF MAINTENANCE SHALL BE ESTABLISHED BY THE BUILDING OWNER. THIS PROGRAM SHALL INCLUDE SUCH ITEMS SUCH AS BUT NOT LIMITED TO PAINTING OF STRUCTURAL STEEL, PROTECTIVE COATING FOR CONCRETE, SEALANTS, CAULKED JOINTS, EXPANSION JOINTS, CONTROL JOINTS, SPALLS AND CRACKS IN CONCRETE, AND PRESSURE WASHING OF EXPOSED STRUCTURAL ELEMENTS EXPOSED TO A SALT ENVIRONMENT OR OTHER HARSH CHEMICALS.

K. SPECIALTY ENGINEER REQUIREMENTS

1. THE FLORIDA STATE BOARD OF PROFESSIONAL ENGINEERS HAS ISSUED RULES ON RESPONSIBILITIES OF PROFESSIONAL ENGINEERS CONCERNING THE DESIGN OF STRUCTURES, PURSUANT TO CHAPTER 61G15-31 OF THE FLORIDA ADMINISTRATIVE CODE. CERTAIN COMPONENTS OF THE STRUCTURE REQUIRE THE WORK OF A SPECIALTY ENGINEER FOR THE DESIGN. ALL PROCEDURES STATED IN THE RULES SHALL APPLY TO THESE SPECIALTY COMPONENTS.

PART XI - DRAWING INTERPRETATION

A. DRAWING VIEWS LABELED AS "TYPICAL"

1. PARTIAL PLANS, ELEVATIONS, SECTIONS, DETAILS, OR SCHEDULES LABELED WITH "TYPICAL" AT THE BEGINNING OF THEIR TITLE SHALL APPLY TO ALL SITUATIONS OCCURRING ON THE PROJECT THAT ARE THE SAME OR SIMILAR TO THOSE SPECIFICALLY SHOWN. THE APPLICABILITY OF THE CONTENT OF THESE VIEWS TO LOCATIONS ON THE PLAN CAN BE DETERMINED FROM THE TITLE OF THE VIEWS. SUCH VIEWS SHALL APPLY WHETHER OR NOT THEY ARE KEYED IN AT EACH LOCATION. DECISIONS REGARDING APPLICABILITY OF THESE "TYPICAL" VIEWS SHALL BE DETERMINED BY THE STRUCTURAL ENGINEER.

B. STRUCTURAL ABBREVIATIONS, SYMBOLS, AND NOTATIONS

1. REFER TO SHEET S-001 FOR ABBREVIATIONS, SYMBOLS, AND NOTATIONS USED ON THE STRUCTURAL DRAWINGS.

COMPONENTS & CLADDING LOADS (0°<0<10°)

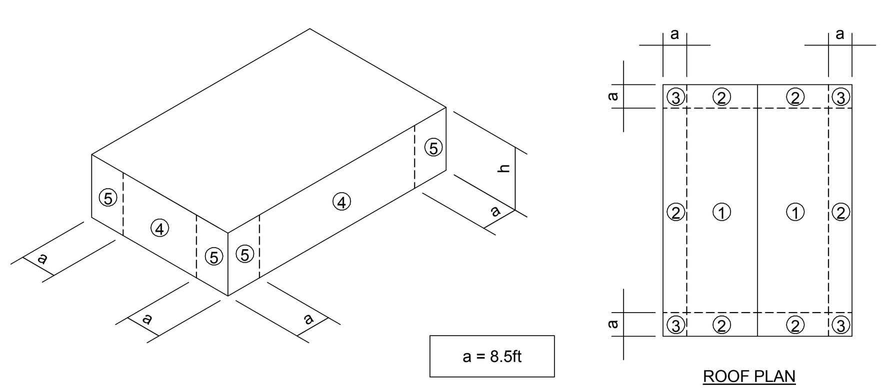

DESIGN LOAD (psf)

ZONE	0-10 sq ft	>100 sq ft
1	+11.5, -28.4	+10.0, -26.0
2	+26.0, -47.6	+22.2, -30.8
3	+26.0, -47.6	+22.2, -30.8
2 (O.H.)	+10.0 , -40.9	+10.0, -38.5
3 (O.H)	+10.0 , -40.9	+10.0, -38.5
ZONE	0-10 sq ft	>500 sq ft
4	+26.0, -28.1	+19.5, -21.6
5	+26.0, -34.6	+19.5, -21.6
4 (PAR)	+64.9, -45.5	+41.6, -32.5
5 (PAR)	+64.9, -52.0	+41.6, -32.5

NOTES

1. (0-10 sq ft) EXAMPLE DENOTES EFFECTIVE WIND AREA.
2. + AND - SIGNS SIGNIFY PRESSURES ACTING TOWARD OR AWAY FROM THE SURFACES,RESPECTIVELY.
3. WIND PRESSURES MAY BE INTERPOLATED FOR EFFECTIVE WIND AREAS BETWEEN THE SPECIFIED RANGES.
4. (O.H.) REFERS TO ROOF OVERHANG. (PAR) REFERS TO PARAPET.
5. USE 5 PSF DEAD LOAD TO REDUCE WIND UPLIST FORCES.

HOUSTON AIRPORT SYSTEM

APPROVED

HOUSTON AIRPORT SYSTEM DIRECTOR OR DESIGNATED PDC REPRESENTATIVE — DATE

JACOBS
5985 Rogerdale Road
Houston, Texas
77072

P 832.351.6000
F 281.776.2501
W www.jacobs.com

TBPE Firm #2966

HENDERSON ROGERS
structural engineers
2603 Augusta, Suite 800
Houston, Texas 77057
713.430.5800 713.430.5888 fax
www.henderson-rogers.com

Seals:

INTERIM REVIEW ONLY
These documents are incomplete, and are released for interim review only and are not intended for regulatory approval, permit, or construction purposes.
Engineer: K. ELAINE ROGERS
Eng. Reg. No.: 65566
TBPE Firm Reg No: 2194
Date: 08/04/2015

Project Client:
Houston Airport System
Project Address

Project Managers Office

George Bush Intercontinental Airport (IAH)

115 Standifer St.
Humble, TX 77338

Number	Description	Date
	100% Bridging Documents	04 Aug 2015

Key Plan — Project North

0 60 120 180
GRAPHIC SCALE: As Noted on Drawings

Project No.:
Copyright: 2015 Jacobs Engineering
TDLR #:

Drawing Sheet Title:

GENERAL NOTES

Drawing Sheet Number:

S-100

Owner's Drawing Sheet No.:

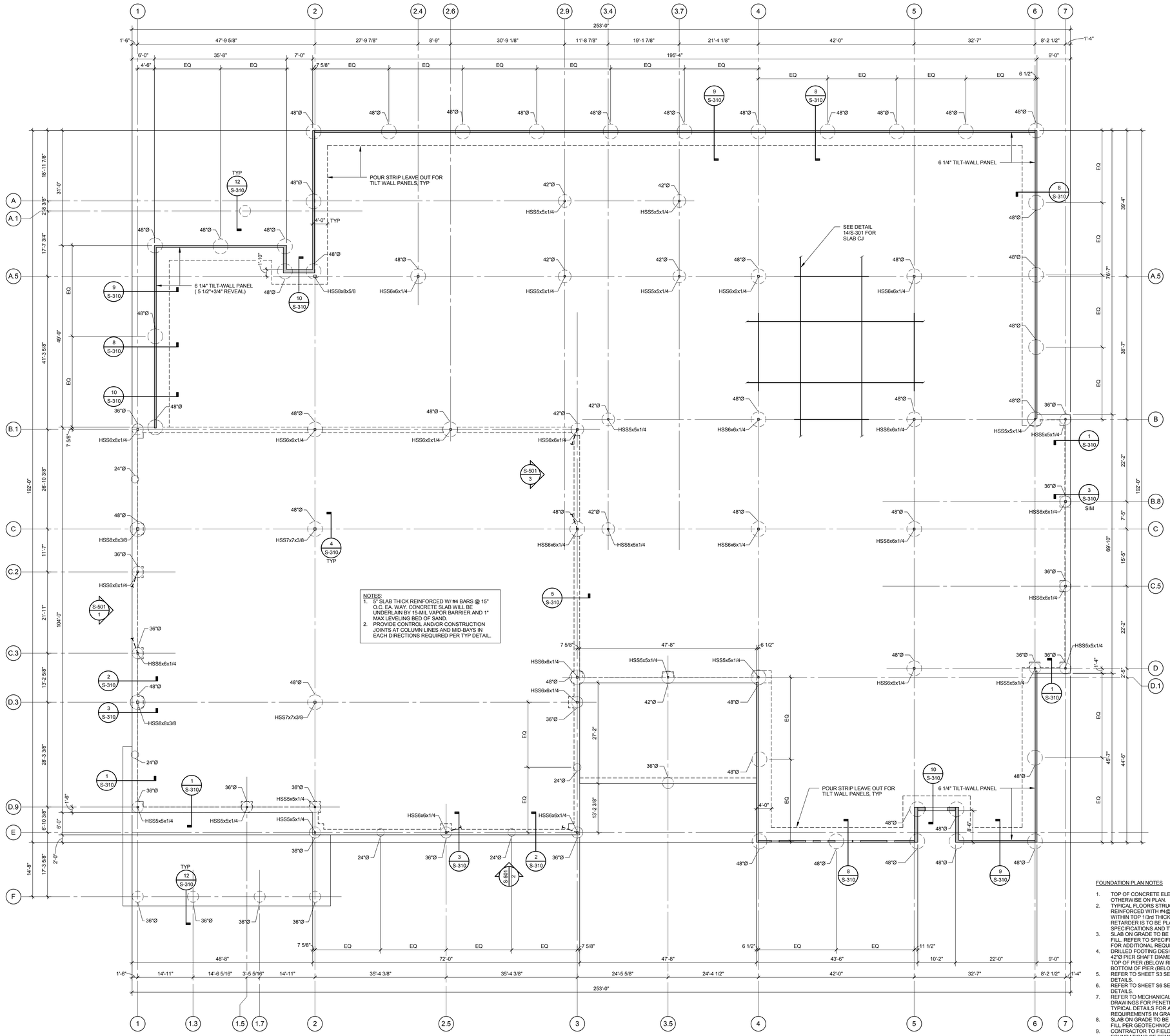

1 FOUNDATION PLAN

3/32" = 1'-0"

FOUNDATION PLAN NOTES

1. TOP OF CONCRETE ELEVATION IS 0'-0", UNLESS NOTED OTHERWISE ON PLAN.
2. TYPICAL FLOORS STRUCTURE IS 6" SLAB ON GRADE REINFORCED WITH #4@12" EW. PLACE REINFORCEMENT WITHIN TOP 1/3rd THICKNESS OF SLAB DEPTH. A VAPOR RETARDER IS TO BE PLACED BELOW SLAB PER SPECIFICATIONS AND TYPICAL DETAILS.
3. SLAB ON GRADE TO BE PLACED ON COMPACTED SELECT FILL. REFER TO SPECIFICATIONS AND GEOTECH REPORT FOR ADDITIONAL REQUIREMENTS.
4. DRILLED FOOTING DESIGNATION:
   42"Ø PIER SHAFT DIAMETER
   TOP OF PIER (BELOW REF ELEVATION 0'-0") WILL BE -3'-0"
   BOTTOM OF PIER (BELOW REF ELEVATION 0'-0") WILL BE -30'-0"
5. REFER TO SHEET S3 SERIES FOR FOUNDATION SECTION AND DETAILS.
6. REFER TO SHEET S6 SERIES FOR TYPICAL TILT WALL PANEL DETAILS.
7. REFER TO MECHANICAL, ELECTRICAL, AND PLUMBING DRAWINGS FOR PENETRATIONS NOT SHOWN. REFER TO TYPICAL DETAILS FOR ADDITIONAL REINFORCEMENT REQUIREMENTS IN GRADE BEAMS.
8. SLAB ON GRADE TO BE PLACED ON MINIMUM 1'-0" OF SELECT FILL PER GEOTECHNICAL RECOMMENDATION.
9. CONTRACTOR TO FIELD VERIFY LOCATION OF EXISTING FOUNDATIONS OF DEMOLISHED BUILDING. CONTRACTOR TO IDENTIFY ANY CONFLICTS BETWEEN EXISTING AND NEW FOUNDATION MEMBERS. CONTRACTOR TO NOTIFY EOR OF ANY POTENTIAL CONFLICTS FOR REVIEW AND CONSIDERATION PRIOR TO CONSTRUCTION OF NEW FOUNDATION.

HOUSTON AIRPORT SYSTEM

APPROVED

HOUSTON AIRPORT SYSTEM DIRECTOR OR DESIGNATED PDC REPRESENTATIVE — DATE

JACOBS

5985 Rogerdale Road
Houston, Texas
77072

P 832.351.6000
F 281.776.2501
W www.jacobs.com

TBPE Firm #2966

HENDERSON ROGERS
structural engineers
2603 Augusta, Suite 800
Houston, Texas 77057
713.430.5800 713.430.5888 fax
www.henderson-rogers.com

Seals:

INTERIM REVIEW ONLY

These documents are incomplete, and are released for interim review only and are not intended for regulatory approval, permit, or construction purposes.

Engineer: K. ELAINE ROGERS
Eng. Reg. No.: 65566
TBPE Firm Reg No: 2194
Date: 08/04/2015

Project Client:
Houston Airport System
Project Address

Project Managers Office

George Bush Intercontinental Airport (IAH)

115 Standifer St.
Humble, TX 77338

Number	Description	Date
	100% Bridging Documents	04 Aug 2015

Key Plan

Project North

0 60 120 180

GRAPHIC SCALE: As Noted on Drawings

Project No.:

Copyright: 2015 Jacobs Engineering

TDLR #:

Drawing Sheet Title:

FOUNDATION PLAN

Drawing Sheet Number:

S-200

Owner's Drawing Sheet No.:

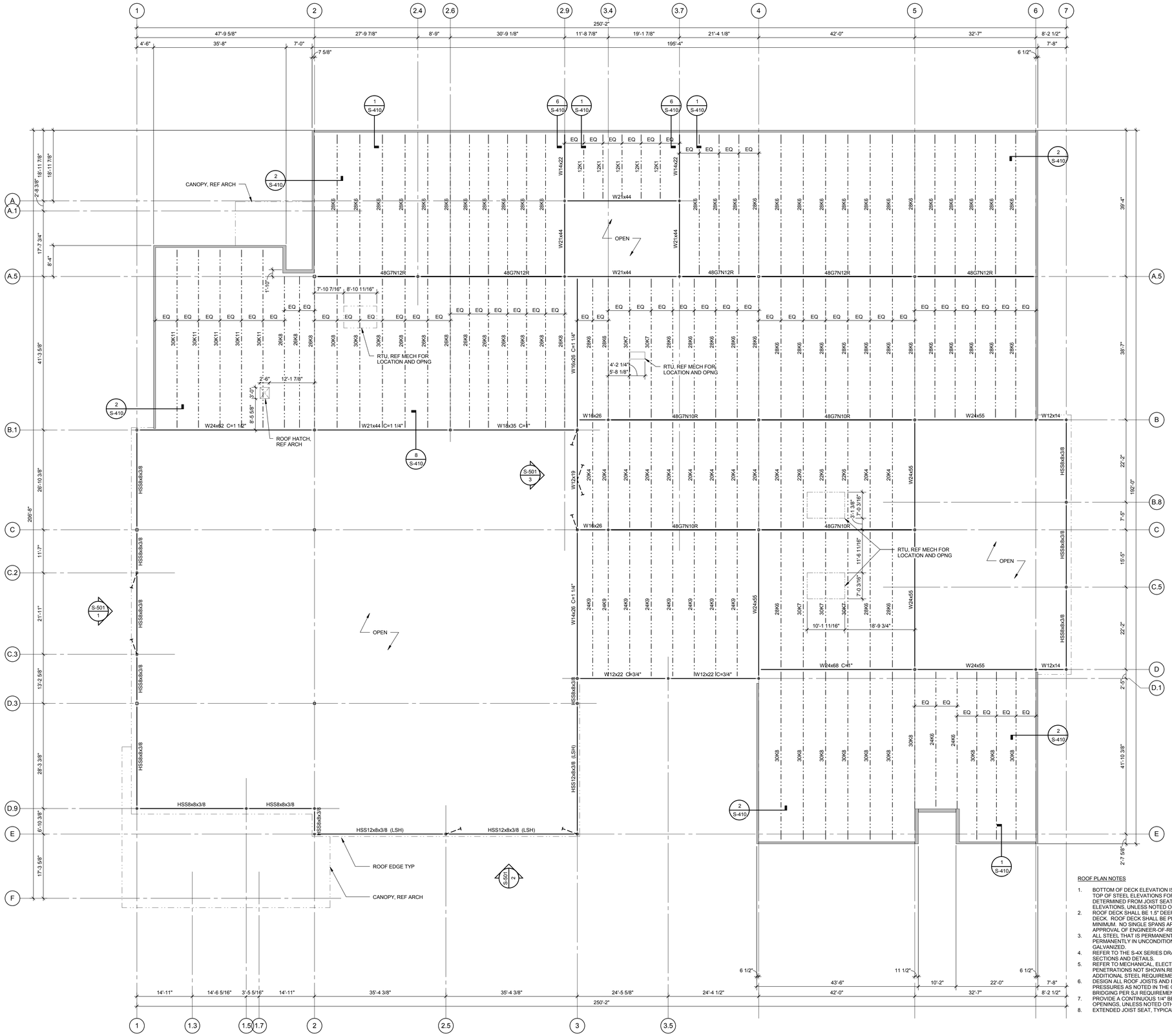

1 LOW ROOF
3/32" = 1'-0"

ROOF PLAN NOTES

1. BOTTOM OF DECK ELEVATION IS 14'-0", UNLESS NOTED OTHERWISE. TOP OF STEEL ELEVATIONS FOR BEAMS AND GIRDERS SHALL BE DETERMINED FROM JOIST SEAT DEPTHS AND BOTTOM OF DECK ELEVATIONS, UNLESS NOTED OTHERWISE.
2. ROOF DECK SHALL BE 1.5" DEEP, TYPE B, 22 GAGE GALV STEEL ROOF DECK. ROOF DECK SHALL BE PLACED WITH A TWO SPAN CONDITION MINIMUM. NO SINGLE SPANS ARE ALLOWED WITHOUT WRITTEN APPROVAL OF ENGINEER-OF-RECORD.
3. ALL STEEL THAT IS PERMANENTLY EXPOSED TO THE EXTERIOR OR IS PERMANENTLY IN UNCONDITIONED SPACE SHALL BE HOT-DIPPED GALVANIZED.
4. REFER TO THE S-4X SERIES DRAWINGS FOR STEEL FRAMING SECTIONS AND DETAILS.
5. REFER TO MECHANICAL, ELECTRICAL, AND PLUMBING DRAWINGS FOR PENETRATIONS NOT SHOWN.REFER TO TYPICAL DETAILS FOR ADDITIONAL STEEL REQUIREMENTS AT OPENINGS.
6. DESIGN ALL ROOF JOISTS AND BRIDGING FOR NET WIND UPLIFT PRESSURES AS NOTED IN THE GENERAL NOTES. PROVIDE JOIST BRIDGING PER SJI REQUIREMENTS.
7. PROVIDE A CONTINUOUS 1/4" BENT PLATE AT ALL ROOF EDGES AND OPENINGS, UNLESS NOTED OTHERWISE.
8. EXTENDED JOIST SEAT, TYPICAL AT PERIMETER.

HOUSTON AIRPORT SYSTEM

APPROVED

HOUSTON AIRPORT SYSTEM
DIRECTOR OR DESIGNATED
PDC REPRESENTATIVE

DATE

JACOBS
5985 Rogerdale Road
Houston, Texas
77072

P 832.351.6000
F 281.776.2501
W www.jacobs.com

TBPE Firm #2966

HENDERSON ROGERS
structural engineers
2603 Augusta, Suite 800
Houston, Texas 77057
713.430.5800 713.430.5888 fax
www.henderson-rogers.com

Seals:

INTERIM REVIEW ONLY

These documents are incomplete, and are released for interim review only and are not intended for regulatory approval, permit, or construction purposes.

Engineer: K. ELAINE ROGERS
Eng. Reg. No.: 65566
TBPE Firm Reg No: 2194
Date: 06/04/2015

Project Client:
Houston Airport System
Project Address

Project Managers Office

George Bush
Intercontinental Airport (IAH)

115 Standifer St.
Humble, TX 77338

Number	Description	Date
	100% Bridging Documents	04 Aug 2015

Key Plan

Project North

0 60 120 180
GRAPHIC SCALE: As Noted on Drawings

Project No.:

Copyright: 2015 Jacobs Engineering

TDLR #:

Drawing Sheet Title:

LOW ROOF PLAN

Drawing Sheet Number:

S-201

Owner's Drawing Sheet No.:

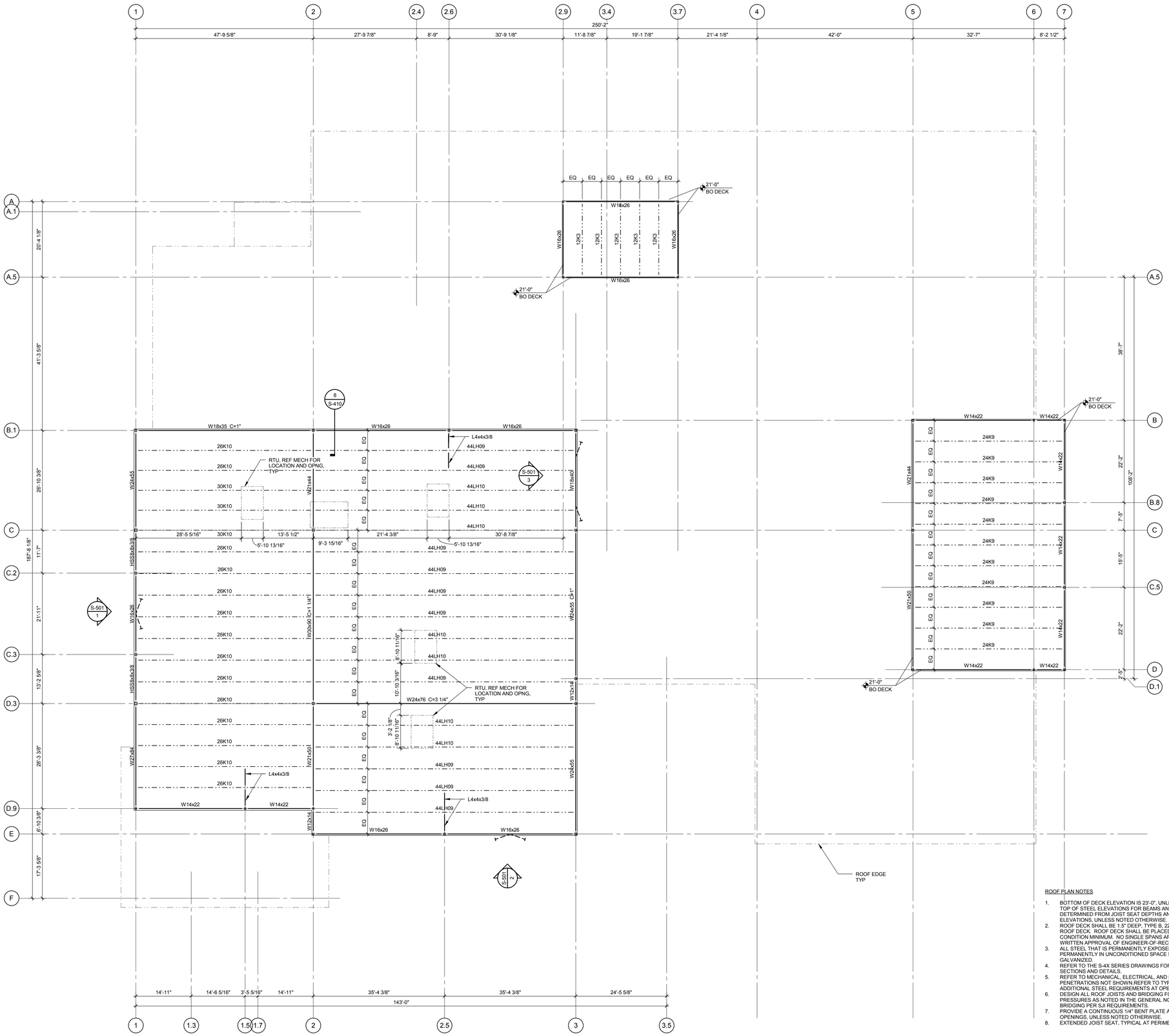

1 HIGH ROOF
3/32" = 1'-0"

ROOF PLAN NOTES

1. BOTTOM OF DECK ELEVATION IS 23'-0", UNLESS NOTED OTHERWISE. TOP OF STEEL ELEVATIONS FOR BEAMS AND GIRDERS SHALL BE DETERMINED FROM JOIST SEAT DEPTHS AND BOTTOM OF DECK ELEVATIONS, UNLESS NOTED OTHERWISE.
2. ROOF DECK SHALL BE 1.5" DEEP, TYPE B, 22 GAGE GALV STEEL ROOF DECK. ROOF DECK SHALL BE PLACED WITH A TWO SPAN CONDITION MINIMUM. NO SINGLE SPANS ARE ALLOWED WITHOUT WRITTEN APPROVAL OF ENGINEER-OF-RECORD.
3. ALL STEEL THAT IS PERMANENTLY EXPOSED TO THE EXTERIOR OR IS PERMANENTLY IN UNCONDITIONED SPACE SHALL BE HOT-DIPPED GALVANIZED.
4. REFER TO THE S-4X SERIES DRAWINGS FOR STEEL FRAMING SECTIONS AND DETAILS.
5. REFER TO MECHANICAL, ELECTRICAL, AND PLUMBING DRAWINGS FOR PENETRATIONS NOT SHOWN.REFER TO TYPICAL DETAILS FOR ADDITIONAL STEEL REQUIREMENTS AT OPENINGS.
6. DESIGN ALL ROOF JOISTS AND BRIDGING FOR NET WIND UPLIFT PRESSURES AS NOTED IN THE GENERAL NOTES. PROVIDE JOIST BRIDGING PER SJI REQUIREMENTS.
7. PROVIDE A CONTINUOUS 1/4" BENT PLATE AT ALL ROOF EDGES AND OPENINGS, UNLESS NOTED OTHERWISE.
8. EXTENDED JOIST SEAT, TYPICAL AT PERIMETER.

HOUSTON AIRPORT SYSTEM

APPROVED

HOUSTON AIRPORT SYSTEM
DIRECTOR OR DESIGNATED
PDC REPRESENTATIVE

DATE

JACOBS

5985 Rogerdale Road
Houston, Texas
77072

P 832.351.6000
F 281.776.2501
W www.jacobs.com

TBPE Firm #2966

HENDERSON ROGERS
structural engineers
2603 Augusta, Suite 800
Houston, Texas 77057
713.430.5800 713.430.5888 fax
www.henderson-rogers.com

Seals:

INTERIM REVIEW ONLY

These documents are incomplete, and are released for interim review only and are not intended for regulatory approval, permit, or construction purposes.

Engineer: K. ELAINE ROGERS
Eng. Reg. No.: 65566
TBPE Firm Reg No: 2194
Date: 08/04/2015

Project Client:
Houston Airport System
Project Address

Project Managers Office

George Bush
Intercontinental Airport (IAH)

115 Standifer St.
Humble, TX 77338

Number	Description	Date
	100% Bridging Documents	04 Aug 2015

Key Plan

Project North

0 60 120 180
GRAPHIC SCALE: As Noted on Drawings

Project No.:

Copyright: 2015 Jacobs Engineering

TDLR #:

Drawing Sheet Title:

HIGH ROOF PLAN

Drawing Sheet Number:

S-202

Owner's Drawing Sheet No.:

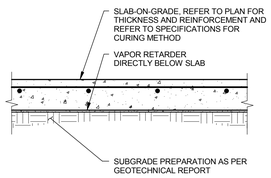

5 TYPICAL SLAB-ON-GRADE SUBGRADE PREPARATION

NO SCALE

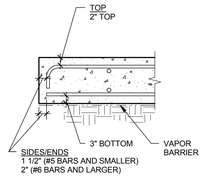

NOTES:
1. REFER TO "NOTES FOR TYPICAL CLEAR CONCRETE COVER FOR REINFORCING STEEL" FOR ADDITIONAL INFORMATION.

4 TYPICAL CLEAR CONCRETE COVER FOR REINFORCING STEEL IN SLABS-ON-GRADE

NO SCALE

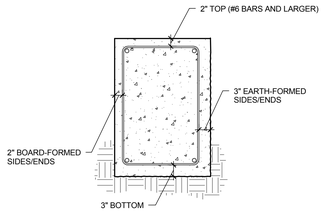

NOTES:
1. REFER TO "NOTES FOR TYPICAL CLEAR CONCRETE COVER FOR REINFORCING STEEL" FOR ADDITIONAL INFORMATION.

3 TYPICAL CLEAR CONCRETE COVER FOR REINFORCING STEEL IN GRADE BEAMS

NO SCALE

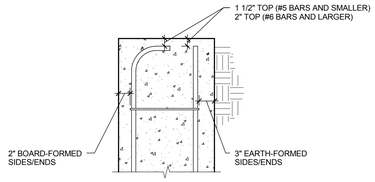

NOTES:
1. REFER TO "NOTES FOR TYPICAL CLEAR CONCRETE COVER FOR REINFORCING STEEL" FOR ADDITIONAL INFORMATION.

2 TYPICAL CLEAR CONCRETE COVER FOR REINFORCING STEEL IN PLINTHS/PILASTERS

NO SCALE

NOTES:
1. CONCRETE PROFILES AND REINFORCING STEEL CONFIGURATIONS ARE SCHEMATIC AND ARE PROVIDED FOR ESTABLISHING TYPICAL CLEAR CONCRETE COVERS ONLY. REFER TO STRUCTURAL PLANS AND DETAILS FOR ALL OTHER INFORMATION.
2. ALL COVERS SHOWN ARE CLEAR FROM THE OUTERMOST SURFACE OF REINFORCING STEEL TO THE CLOSEST OUTER SURFACE OF THE CONCRETE, INCLUDING REVEALS, DRIP GROOVES, OR RUSTICATIONS.
3. WHERE COVERS ARE DIFFERENT AS A FUNCTION OF BAR SIZE, DETAILER SHALL ADJUST LOCATION OF TRANSVERSE REINFORCING STEEL AS REQUIRED SUCH THAT CLEAR COVERS ARE MET FOR BOTH TRANSVERSE AND LONGITUDINAL STEEL.

1 NOTES FOR TYPICAL CLEAR CONCRETE COVER FOR REINFORCING STEEL

NO SCALE

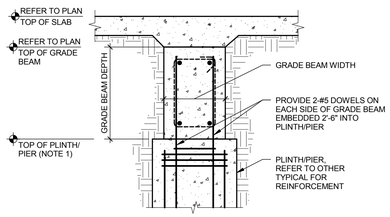

NOTES:
1. WHERE GRADE BEAMS OF UNEQUAL DEPTH FRAME INTO THE SAME SUPPORT, TOP OF SUPPORT SHALL BE AT THE BOTTOM OF DEEPEST GRADE BEAM. POUR SHALLOWER BEAM DOWN ONTO SUPPORT.
2. AT CONTRACTOR'S OPTION, EXTEND PLINTH VERTICAL REINFORCEMENT INTO GRADE BEAM WITHOUT SPLICE (IN LIEU OF DOWELS). WIDEN GRADE BEAM AS REQUIRED TO ENSURE 3" MINIMUM CLEAR COVER ALL AROUND.

10 TYPICAL INTERIOR GRADE BEAM ON CONCRETE PLINTH/PIER (BEAM WIDTH < PLINTH/PIER SIZE)

NO SCALE

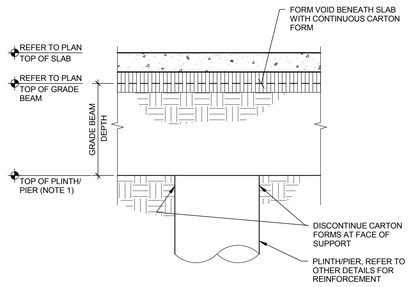

NOTES:
1. WHERE GRADE BEAMS OF UNEQUAL DEPTH FRAME INTO THE SAME SUPPORT, TOP OF SUPPORT SHALL BE AT THE BOTTOM OF THE DEEPEST GRADE BEAM. POUR SHALLOWER BEAM DOWN ONTO SUPPORT.

9 TYPICAL INTERIOR GRADE BEAM ON CONCRETE PLINTH/PIER

NO SCALE

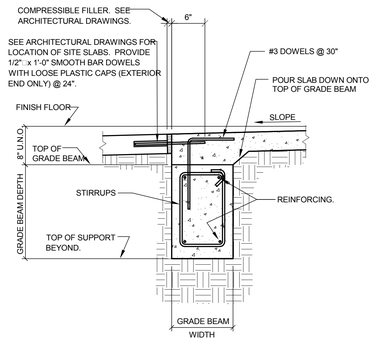

NOTES:
1. WHERE GRADE BEAMS OF UNEQUAL DEPTH FRAME TO THE SAME SUPPORT, TOP OF SUPPORT SHALL BE AT THE BOTTOM OF THE DEEPEST GRADE BEAM.
2. SEE GENERAL NOTES FOR CLEAR COVER AT SIDES, TOP, AND BOTTOM OF BEAM.

8 TYPICAL EXTERIOR GRADE BEAM AT ENTRANCE

12" = 1'-0"

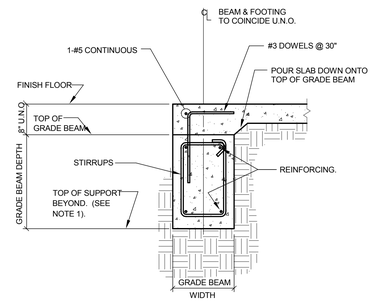

NOTES:
1. WHERE GRADE BEAMS OF UNEQUAL DEPTH FRAME TO THE SAME SUPPORT, TOP OF SUPPORT SHALL BE AT THE BOTTOM OF THE DEEPEST GRADE BEAM.
2. SEE GENERAL NOTES FOR CLEAR COVER AT SIDES, TOP, AND BOTTOM OF BEAM.

7 TYPICAL EXTERIOR GRADE BEAM

12" = 1'-0"

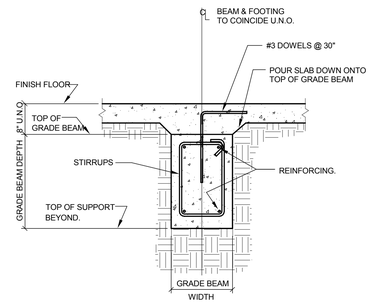

NOTES:
1. WHERE GRADE BEAMS OF UNEQUAL DEPTH FRAME TO THE SAME SUPPORT, TOP OF SUPPORT SHALL BE AT THE BOTTOM OF THE DEEPEST GRADE BEAM.
2. SEE GENERAL NOTES FOR CLEAR COVER AT SIDES, TOP, AND BOTTOM OF BEAM.

6 TYPICAL INTERIOR GRADE BEAM

12" = 1'-0"

DEVELOPMENT LENGTHS OF STANDARD HOOKS IN TENSION GRADE 60 REINFORCEMENT, NORMALWEIGHT CONCRETE													
BAR SIZE	f'c=3000 PSI		f'c=4000 PSI		f'c=5000 PSI		f'c=6000 PSI		f'c=7000 PSI		f'c=8000 PSI		BAR SIZE
	Lhb	0.7 Lhb	Lhb	0.7 Lhb	Lhb	0.7 Lhb	Lhb	0.7 Lhb	Lhb	0.7 Lhb	Lhb	0.7 Lhb	
#3	9	7	8	6	7	6	6	6	6	6	6	6	#3
#4	11	8	10	7	9	7	8	6	8	6	7	6	#4
#5	14	10	12	9	11	8	10	7	9	7	9	7	#5
#6	17	12	15	11	13	10	12	9	11	8	11	8	#6
#7	20	14	17	12	15	11	14	10	13	10	12	9	#7
#8	22	16	19	14	17	12	16	12	15	11	14	10	#8
#9	25	18	22	16	20	14	18	13	17	12	16	12	#9
#10	28	20	25	18	22	16	20	14	19	14	18	13	#10
#11	31	22	27	19	24	17	22	16	21	15	19	14	#11
#14	38	-	33	-	29	-	27	-	25	-	23	-	#14
#18	50	-	43	-	39	-	35	-	33	-	31	-	#18

NOTES:
1. Ldh = DEVELOPMENT LENGTH OF STANDARD HOOKS IN TENSION (INCHES).
2. Ldh = Lhb UNLESS CONDITIONS OF NOTE 3 ARE SATISFIED.
3. Ldh = 0.7Lhb FOR #11 BARS AND SMALLER WHEN SIDE COVER (NORMAL TO PLANE OF HOOK) IS NOT LESS THAN 2 1/2 INCHES AND FOR 90° HOOKS COVER ON BAR EXTENSION BEYOND HOOK IS NOT LESS THAN 2 INCHES.
4. HOOKS ARE NOT CONSIDERED EFFECTIVE FOR DEVELOPING BARS IN COMPRESSION.
5. Ldh SHALL BE MULTIPLIED BY 1.2 FOR EPOXY-COATED HOOKED REINFORCING BARS.

15 TYPICAL DEVELOPMENT LENGTHS OF STANDARD HOOKS IN TENSION

NO SCALE

BEAM AND GIRDER TENSION DEVELOPMENT AND LAP SPLICE LENGTHS GRADE 60 REINFORCEMENT, NORMALWEIGHT CONCRETE													
BAR SIZE	LAP CLASS	f'c = 3000 PSI		f'c = 4000 PSI		f'c = 5000 PSI		f'c = 6000 PSI		f'c = 7000 PSI		f'c = 8000 PSI	
		BOTTOM BARS	OTHER BARS	BOTTOM BARS	OTHER BARS	BOTTOM BARS	OTHER BARS	BOTTOM BARS	OTHER BARS	BOTTOM BARS	OTHER BARS	BOTTOM BARS	OTHER BARS
#3	A	12	13	12	12	12	12	12	12	12	12	12	12
	B	16	17	16	16	16	16	16	16	16	16	16	16
#4	A	16	20	14	18	12	16	12	15	12	14	12	13
	B	21	26	19	24	16	21	16	20	16	19	16	17
#5	A	23	29	20	25	18	23	16	21	15	19	14	18
	B	30	38	26	33	24	30	21	28	20	25	19	24
#6	A	31	40	27	35	24	31	22	28	20	26	19	25
	B	41	52	36	46	32	41	29	37	26	34	25	33
#7	A	46	60	40	52	36	46	33	42	30	39	28	37
	B	60	78	52	68	47	60	43	55	39	51	37	49
#8	A	60	78	52	67	46	60	42	55	39	51	37	48
	B	78	102	68	88	60	78	55	72	51	67	49	63
#9	A	64	84	56	72	50	65	46	59	42	55	40	51
	B	84	110	73	94	65	85	60	77	55	72	52	67
#10	A	72	93	62	81	56	72	51	66	47	61	44	57
	B	94	121	81	106	73	94	67	86	62	80	58	75
#11	A	85	110	74	96	66	86	60	78	56	72	52	68
	B	111	143	97	125	86	112	78	102	73	94	68	89

NOTES:
1. ALL SPLICE LENGTHS ARE IN INCHES.
2. THIS TABLE SHALL BE USED FOR BEAMS AND GIRDERS ONLY. REFER TO OTHER DEVELOPMENT LENGTH TABLES FOR OTHER MEMBERS.
3. THE TENSION DEVELOPMENT LENGTH (Ld) IS EQUAL TO THE SCHEDULED "CLASS A" LAP SPLICE LENGTH.
4. A BOTTOM BAR IS DEFINED AS ANY BAR THAT DOES NOT HAVE MORE THAN 12" OF FRESH CONCRETE BELOW THE BAR.
5. OTHER BARS INCLUDE TOP BARS, FACE BARS, AND ALL OTHER BARS THAT HAVE MORE THAN 12" OF FRESH CONCRETE BELOW THE BAR.
6. FOR EPOXY-COATED BARS, MULTIPLY THE TABULATED SPLICE LENGTHS OF BOTTOM BARS BY 1.5 AND THE TABULATED SPLICE LENGTHS OF OTHER BARS BY 1.3.
7. WHEN LAP SPLICING BARS OF DIFFERENT SIZES, THE LAP LENGTH IS DETERMINED BY THE SMALLER BAR BUT MAY NOT BE LESS THAN THE "CLASS A" SPLICE LENGTH OF THE LARGER BAR.

14 TYPICAL BEAM AND GIRDER TENSION DEVELOPMENT AND LAP SPLICE LENGTHS

NO SCALE

SLAB TENSION DEVELOPMENT AND LAP SPLICE LENGTHS GRADE 60 REINFORCEMENT, NORMALWEIGHT CONCRETE							
BAR SIZE	LAP CLASS	f'c = 3000 PSI		f'c = 4000 PSI		f'c = 5000 PSI	
		BOTTOM BARS	OTHER BARS	BOTTOM BARS	OTHER BARS	BOTTOM BARS	OTHER BARS
#3	A	12	13	12	12	12	12
	B	16	17	16	16	16	16
#4	A	17	22	15	19	13	17
	B	23	29	20	25	17	23
#5	A	25	32	21	28	19	25
	B	33	42	28	37	25	33
#6	A	33	43	29	37	26	34
	B	43	56	38	49	34	45
#7	A	53	69	46	60	42	54
	B	69	90	60	78	55	71
#8	A	66	86	57	74	51	67
	B	86	112	75	97	67	88
#9	A	80	104	69	90	62	81
	B	104	136	90	117	81	106

NOTES:
1. ALL SPLICE LENGTHS ARE IN INCHES.
2. THIS TABLE SHALL BE USED FOR SLABS ONLY. REFER TO OTHER DEVELOPMENT LENGTH TABLES FOR OTHER MEMBERS.
3. THE TENSION DEVELOPMENT LENGTH (Ld) IS EQUAL TO THE SCHEDULED "CLASS A" LAP SPLICE LENGTH.
4. A BOTTOM BAR IS DEFINED AS ANY BAR THAT DOES NOT HAVE MORE THAN 12" OF FRESH CONCRETE BELOW THE BAR.
5. OTHER BARS INCLUDE TOP BARS AND ALL OTHER BARS THAT HAVE MORE THAN 12" OF FRESH CONCRETE BELOW THE BAR. FOR TOP REINFORCEMENT IN SLABS THAT ARE 12" THICK OR LESS, TABULATED SPLICE LENGTHS FOR BOTTOM BARS SHALL BE USED.
6. FOR EPOXY-COATED BARS, MULTIPLY THE TABULATED SPLICE LENGTHS OF BOTTOM BARS BY 1.5 AND THE TABULATED SPLICE LENGTHS OF OTHER BARS BY 1.3.
7. WHEN LAP SPLICING BARS OF DIFFERENT SIZES, THE LAP LENGTH IS DETERMINED BY THE SMALLER BAR BUT MAY NOT BE LESS THAN THE "CLASS A" SPLICE LENGTH OF THE LARGER BAR.

12 TYPICAL SLAB TENSION DEVELOPMENT AND LAP SPLICE LENGTHS

NO SCALE

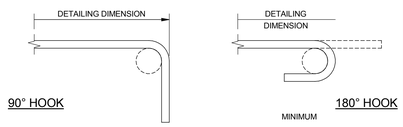

END HOOK DIMENSIONS				
BAR SIZE	FINISHED BEND DIAMETER D, (INCHES)	180° HOOKS		90° HOOK
		A OR G, (INCHES)	J, (INCHES)	A OR G, (INCHES)
#3	2 1/4	5	3	6
#4	3	6	4	8
#5	3 3/4	7	5	10
#6	4 1/2	8	6	12
#7	5 1/4	10	7	14
#8	6	11	8	16
#9	9 1/2	15	11 3/4	19
#10	10 3/4	17	13 1/4	22
#11	12	19	14 3/4	24
#14	18 1/4	27	21 3/4	31
#18	24	36	28 1/2	41

D = INSIDE DIAMETER OF BEND

11 TYPICAL END HOOK TYPES

NO SCALE

HOUSTON AIRPORT SYSTEM

APPROVED

HOUSTON AIRPORT SYSTEM DIRECTOR OR DESIGNATED PDC REPRESENTATIVE — DATE

JACOBS
5985 Rogerdale Road
Houston, Texas
77072

P 832.351.6000
F 281.776.2501
W www.jacobs.com

TBPE Firm #2966

HENDERSON ROGERS
structural engineers
2603 Augusta, Suite 800
Houston, Texas 77057
713.430.5800 713.430.5888 fax
www.henderson-rogers.com

Seals:

INTERIM REVIEW ONLY

These documents are incomplete, and are released for interim review only and are not intended for regulatory approval, permit, or construction purposes.

Engineer: K. ELAINE ROGERS
Eng. Reg. No.: 65566
TBPE Firm Reg No: 2194
Date: 08/04/2015

Project Client:
Houston Airport System
Project Address

Project Managers Office

George Bush Intercontinental Airport (IAH)

115 Standifer St.
Humble, TX 77338

Number	Description	Date
	100% Bridging Documents	04 Aug 2015

Key Plan — Project North

0 60 120 180
GRAPHIC SCALE: As Noted on Drawings

Project No.:

Copyright: 2015 Jacobs Engineering

TDLR #:

Drawing Sheet Title:

FOUNDATION TYPICAL DETAILS

Drawing Sheet Number:

S-300

Owner's Drawing Sheet No.:

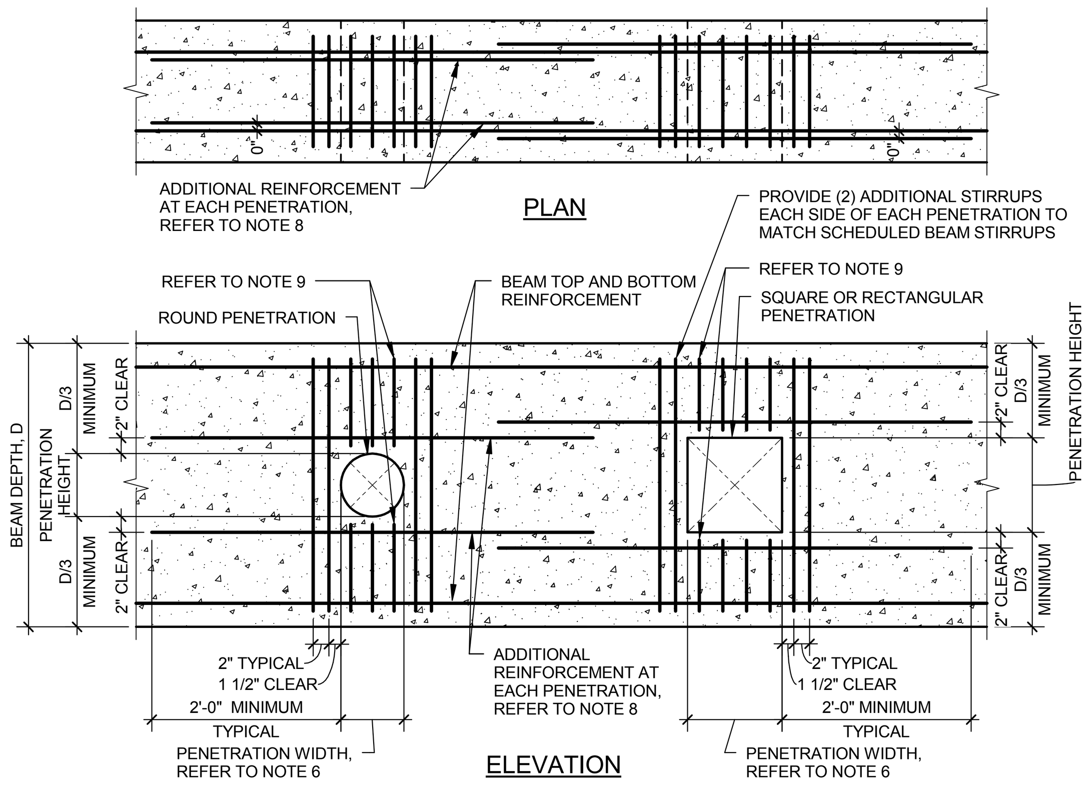

NOTES:
1. GENERAL CONTRACTOR SHALL COORDINATE LOCATION, SIZE, AND ELEVATION AND INCLUDE IN HIS CONTRACT PRICE ALL REQUIRED HORIZONTAL PENETRATIONS THROUGH CONCRETE BEAMS WHETHER SHOWN ON STRUCTURAL DRAWINGS OR NOT.
2. WHERE BEAM PENETRATIONS ARE REQUIRED BUT ARE NOT SPECIFICALLY DETAILED ON THE STRUCTURAL DRAWINGS, CONTRACTOR SHALL SUBMIT DRAWINGS SHOWING DIMENSIONS AND LOCATIONS OF ALL REQUIRED PENETRATIONS FOR REVIEW AND APPROVAL.
3. "D" DENOTES THE DEPTH OF BEAM.
4. CLEAR SPACING BETWEEN PENETRATIONS SHALL BE 24" MINIMUM UNLESS NOTED OTHERWISE BY THE STRUCTURAL ENGINEER.
5. PENETRATIONS SHALL BE LOCATED ACCORDING TO THE FOLLOWING CRITERIA:
   a. FOR BEAMS NOT SUPPORTING INTERSECTING BEAMS LOCATE PENETRATIONS WITHIN TWO FEET EITHER SIDE OF BEAM MIDSPAN.
   b. FOR BEAMS SUPPORTING INTERSECTING BEAMS CHECK WITH STRUCTURAL ENGINEER.
6. PENETRATION WIDTH MUST NOT EXCEED PENETRATION HEIGHT, UNLESS NOTED OTHERWISE ON THE STRUCTURAL DRAWINGS.
7. FOR LOCATIONS AND/OR SIZES OF PENETRATIONS NOT CONFORMING TO THE ABOVE CRITERIA AND NOT OTHERWISE DETAILED ON THE STRUCTURAL DRAWINGS, CONTRACTOR SHALL COORDINATE REQUIRED ADDITIONAL REINFORCEMENT WITH THE STRUCTURAL ENGINEER.
8. PROVIDE THE FOLLOWING REINFORCEMENT AT EACH SLEEVE, UNLESS NOTED OTHERWISE ON THE STRUCTURAL DRAWINGS:
   1-#5 TOP AND BOTTOM AT BEAMS WITH WIDTHS LESS THAN 9".
   2-#5 TOP AND BOTTOM AT BEAMS WITH 2-LEG STIRRUPS.
   4-#5 TOP AND BOTTOM AT BEAMS WITH 4-LEG STIRRUPS.
   "N"-#5 TOP AND BOTTOM AT BEAMS WITH "N"-LEG STIRRUPS.
9. PROVIDE ADDITIONAL STIRRUPS ABOVE AND BELOW PENETRATIONS AT SPACING NOT TO EXCEED ONE HALF OF THE SCHEDULED STIRRUP SPACING, UNLESS DETAILED OTHERWISE ON THE STRUCTURAL DRAWINGS.
10. SCHEDULED BEAM STIRRUPS NOT SHOWN FOR CLARITY.

5 TYPICAL HORIZONTAL PENETRATION IN CONCRETE BEAM

NO SCALE

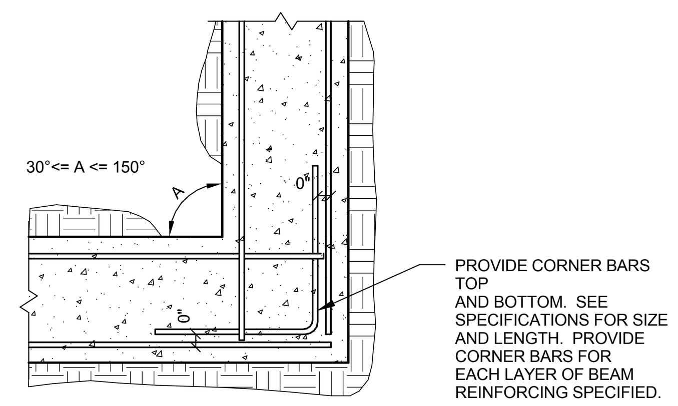

NOTES:
1. GRADE BEAMS SHALL BE POURED MONOLITHICALLY AROUND CORNERS. SEE TYPICAL GRADE BEAM CONSTRUCTION JOINT DETAIL FOR ACCEPTABLE CONSTRUCTION JOINT LOCATIONS.

3 GRADE BEAM REINFORCING - STEEL SPLICE AT CORNERS (PLAN VIEW)

NO SCALE

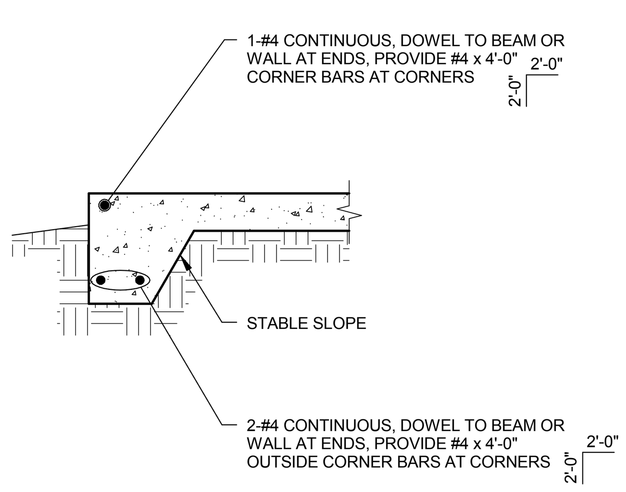

2 TYPICAL EXTERIOR SLAB-ON-GRADE TURNDOWN

NO SCALE

03300-FN-SOG-05
© COPYRIGHT WALTER P. MOORE AND ASSOCIATES, INC. 2010

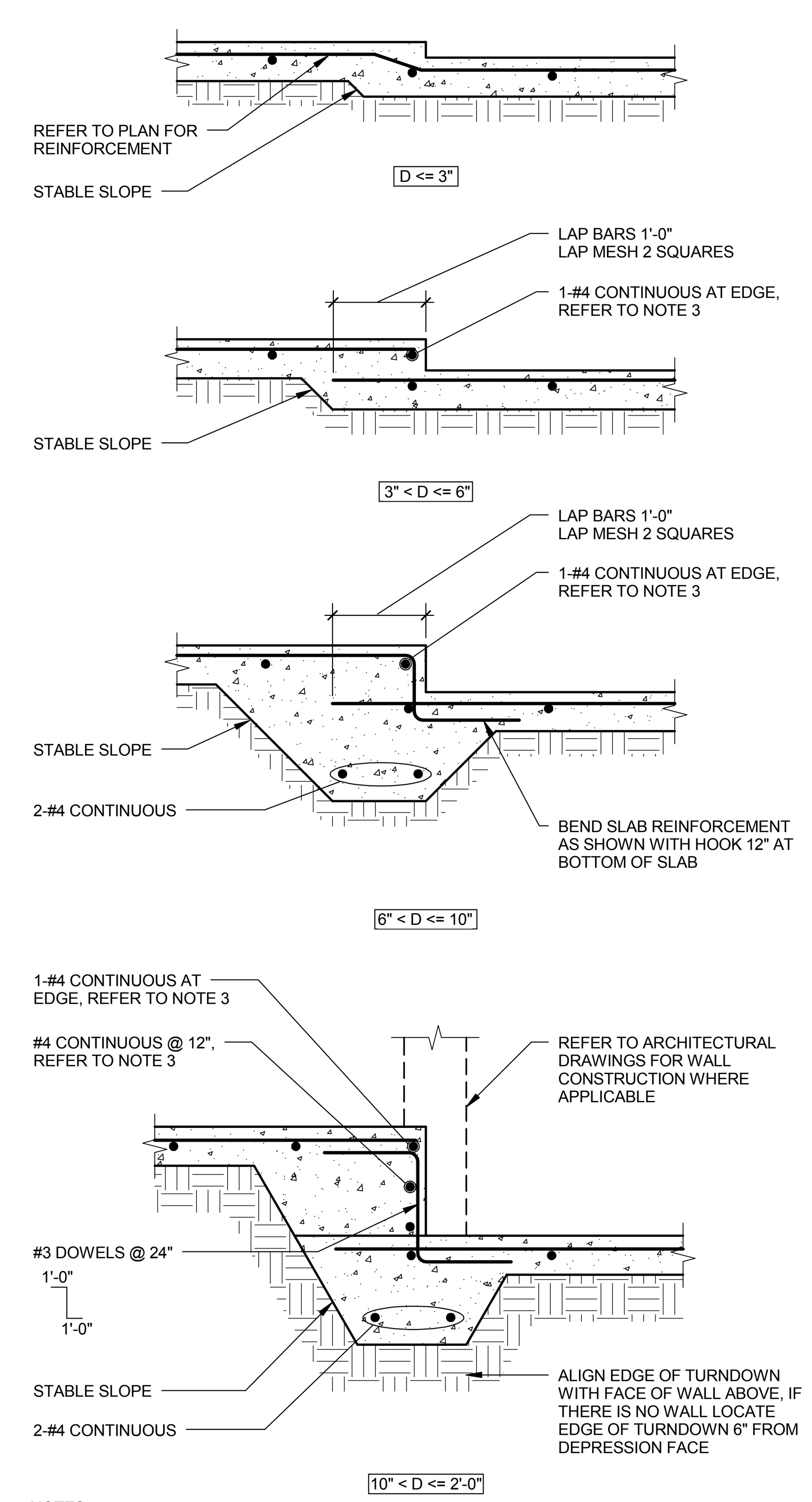

NOTES:
1. CONTRACTOR SHALL COORDINATE DEPTH AND LOCATION OF ALL FLOOR DEPRESSIONS WITH ARCHITECTURAL DRAWINGS.
2. PROVIDE ADDITIONAL 1-#4 x 4'-0" DIAGONAL TOP AT ALL RE-ENTRANT CORNERS.
3. PROVIDE #4x4'-0" CORNER BARS FOR ALL CONTINUOUS EDGE REINFORCEMENT THAT CAN NOT DEVELOP INTO ADJACENT SLAB.

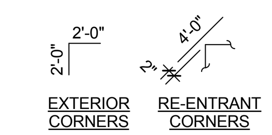

6 TYPICAL SLAB-ON-GRADE DEPRESSIONS

NO SCALE

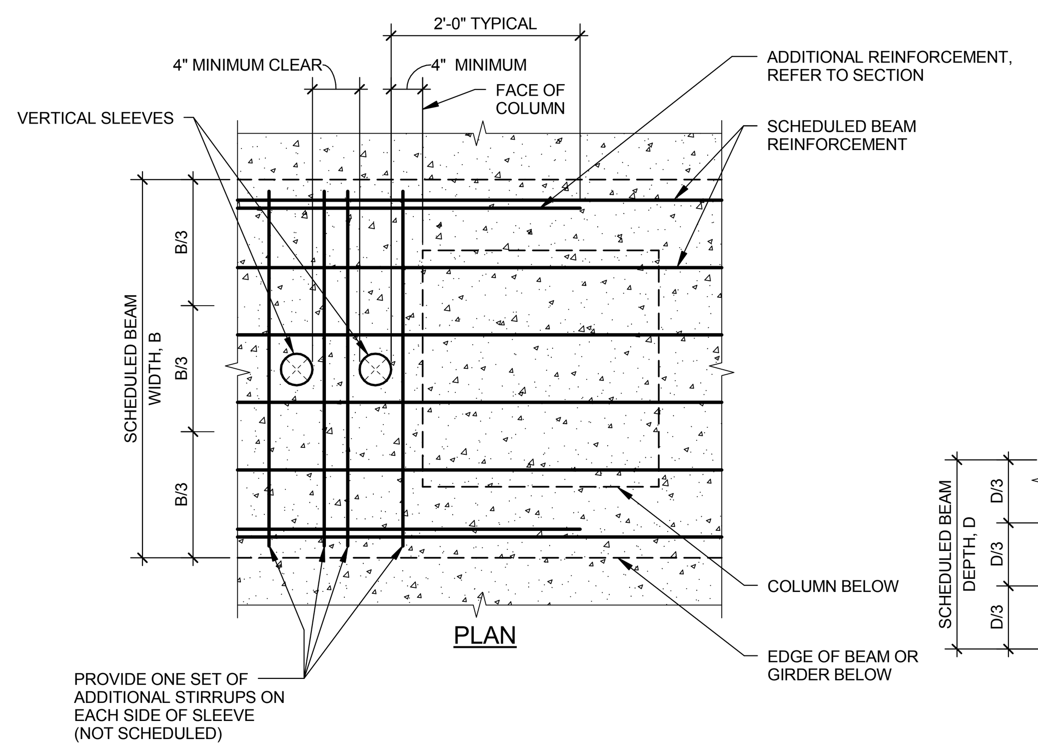

NOTES:
1. GENERAL CONTRACTOR SHALL COORDINATE REQUIRED BEAM SLEEVES WITH MECHANICAL, ELECTRICAL, AND PLUMBING CONTRACTORS. REQUIRED SLEEVES MAY OR MAY NOT BE SHOWN ON THE STRUCTURAL DRAWINGS. GENERAL CONTRACTOR SHALL SUBMIT PLAN SHOWING LAYOUT OF ALL SLEEVES WITH FORMWORK SHOP DRAWING SUBMITTAL.
2. SLEEVES SHALL BE LOCATED WITHIN THE MIDDLE THIRD OF THE SCHEDULED BEAM WIDTH.
3. CONTINUOUS BEAM REINFORCEMENT MAY BE SLIGHTLY DISPLACED (3" MAXIMUM) OR ADJACENT BARS BUNDLED (2 BAR BUNDLES MAXIMUM) TO FACILITATE SLEEVE INSTALLATION. DO NOT CUT, OFFSET, OR BEND REINFORCEMENT.
4. SLEEVES OCCURRING ON OPPOSITE SIDES OF A COLUMN MUST BE IN LINE.
5. THE OUTSIDE DIAMETER OF A SLEEVE MAY NOT EXCEED 15% OF THE SCHEDULED WIDTH OF THE BEAM THROUGH WHICH IT MUST PASS.
6. THE CONTRACTOR SHALL CONTACT THE ENGINEER OF RECORD WHEN A SLEEVE SIZE OR LOCATION DOES NOT MEET THE ABOVE CONDITIONS.
7. SCHEDULED BEAM STIRRUPS NOT SHOWN FOR CLARITY.

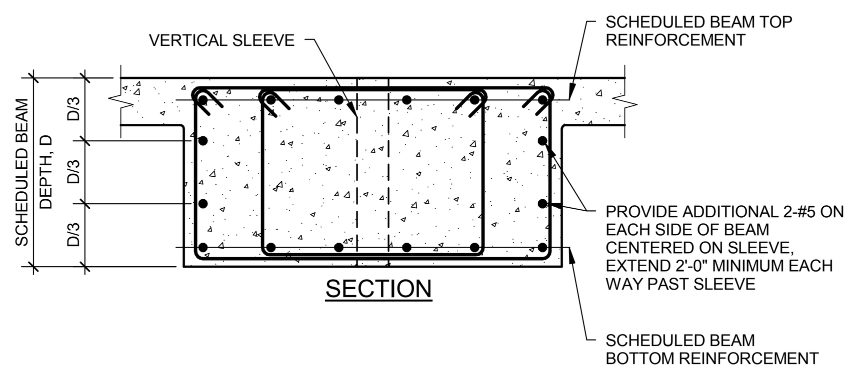

10 TYPICAL VERTICAL PENETRATION IN CONCRETE BEAM

NO SCALE

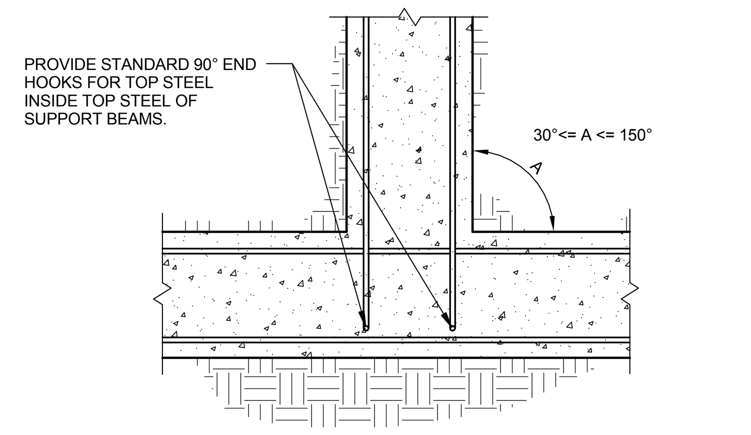

NOTES:
1. GRADE BEAMS SHALL BE POURED MONOLITHICALLY AT INTERSECTIONS. SEE TYPICAL GRADE BEAM CONSTRUCTION JOINT DETAIL FOR ACCEPTABLE CONSTRUCTION JOINT LOCATIONS.

8 GRADE BEAM "T" INTERSECTION TOP BAR PLACEMENT DIAGRAM

NO SCALE

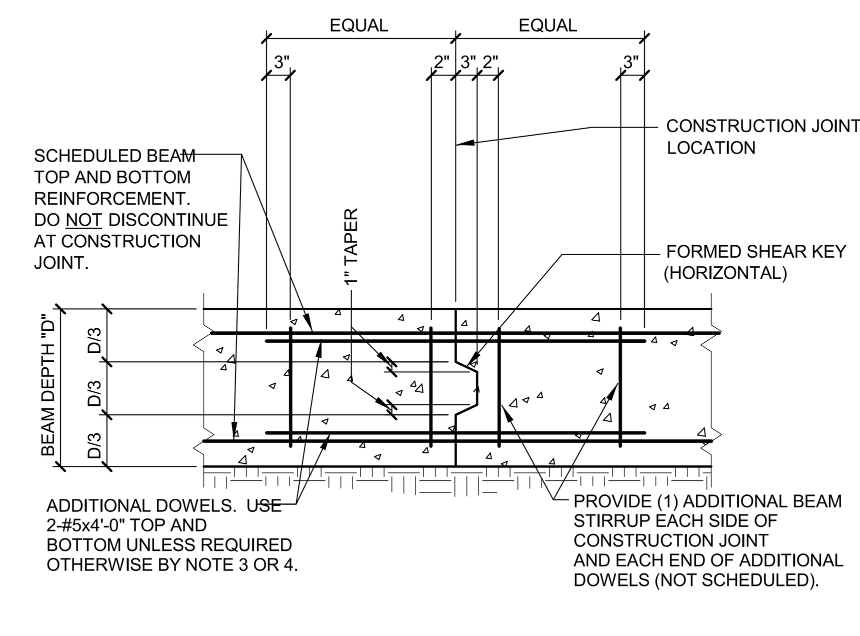

NOTES:
1. GENERAL CONTRACTOR SHALL SUBMIT DESIRED CONSTRUCTION JOINT LAYOUT AS A SHOP DRAWING FOR APPROVAL A MINIMUM OF TWO WEEK PRIOR TO POUR.
2. CONSTRUCTION JOINT LOCATIONS SHALL BE COORDINATED WITH REINFORCING STEEL SUPPLIER AND ERECTOR.
3. ACCEPTABLE JOINT LOCATIONS ARE AS FOLLOWS:
   a. FOR BEAMS NOT SUPPORTING INTERSECTING BEAMS: PLACE JOINT MIDDLE THIRD OF SPAN.
   b. FOR BEAMS SUPPORTING INTERSECTING BEAMS, CHECK WITH STRUCTURAL ENGINEER.
4. FOR JOINT LOCATIONS OTHER THAN WITHIN MIDDLE THIRD OF SPAN, CONTRACTOR SHALL COORDINATE REQUIRED ADDITIONAL REINFORCEMENT WITH THE ENGINEER ON THE SHOP DRAWINGS.

7 TYPICAL DETAIL GRADE BEAM CONSTRUCTION JOINT

NO SCALE

DOWEL SCHEDULE			
SLAB DEPTH (INCHES)	DOWEL SIZE (DIAMETER, INCHES)	DOWEL LENGTH (INCHES)	DOWEL SPACING (INCHES)
5 TO 6	3/4	16	12
6 1/2 TO 8	1	18	12

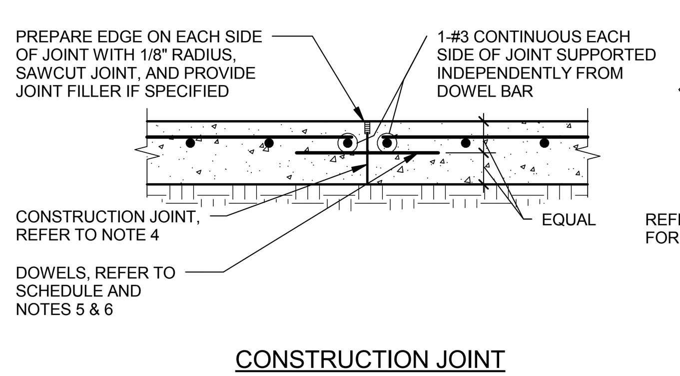

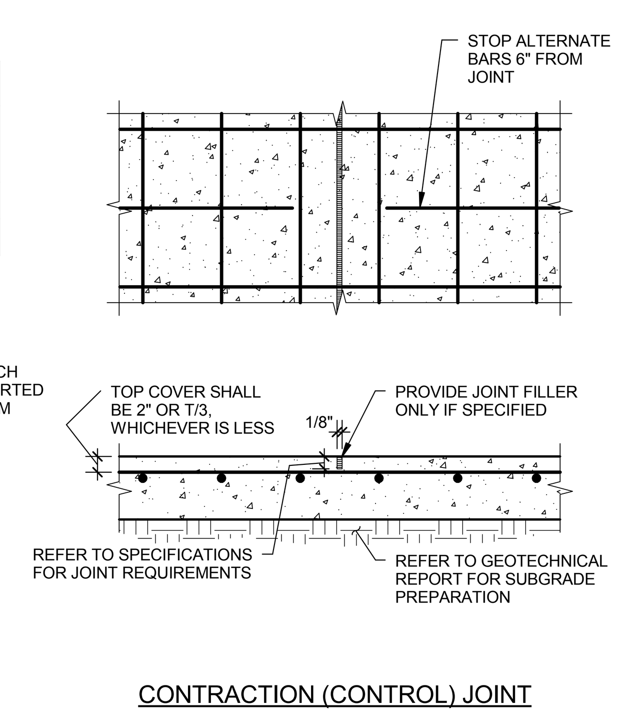

NOTES:
1. REFER TO PLAN FOR SLAB THICKNESS (T) AND REINFORCEMENT.
2. SLAB REINFORCEMENT SHALL BE CHAIRED BY SOIL SUPPORTED SLAB BOLSTERS.
3. LONG STRIP CONSTRUCTION METHOD SHALL BE USED IN PLACING CONCRETE FOR ALL SLABS-ON-GRADE UNLESS NOTED OTHERWISE. REFER TO "TYPICAL LONG STRIP CONSTRUCTION SCHEMATIC JOINT LAYOUT" FOR COMPLETE PLACING SEQUENCE. AT CONTRACTOR'S OPTION, LARGER SLAB AREAS MAY BE POURED PROVIDED THE EARLY-ENTRY DRY-CUT METHOD OF INSTALLING CONTRACTION JOINTS IS USED. REFER TO SPECIFICATIONS.
4. AT CONSTRUCTION JOINTS, BREAK BOND BETWEEN NEW AND PREVIOUSLY PLACED SLAB BY SPRAYING OR PAINTING EXPOSED SIDES OF JOINT WITH A CURING COMPOUND, BONDBREAKER, OR FORM OIL.
5. DOWELS SHOULD BE SMOOTH, ALIGNED, AND SUPPORTED SO THEY WILL REMAIN PARALLEL IN BOTH THE HORIZONTAL AND VERTICAL PLANES.
6. TO PREVENT A BOND BETWEEN THE DOWEL AND THE CONCRETE, LIGHTLY COAT THE EXPOSED END OF THE DOWELS WITH A PARAFFIN-BASED LUBRICANT, ASPHALT EMULSION, FORM OIL, OR GREASE IMMEDIATELY BEFORE PLACING CONCRETE ON THE SECOND SIDE OF THE JOINT. ALTERNATIVELY, USE A PLASTIC OR METAL SLEEVE SPECIFICALLY MANUFACTURED FOR THIS PURPOSE. REFER TO SPECIFICATIONS.
7. AT CONTRACTION (CONTROL) JOINTS, MAKE SAW CUT AS SOON AS SLAB IS ABLE TO SUPPORT WEIGHT OF WORKERS AND SAWING EQUIPMENT WITHOUT DAMAGE TO FINISH SURFACE OF SLAB.
8. PROVIDE CONTRACTION OR CONSTRUCTION JOINTS AT EVERY COLUMN LINE AND IN BETWEEN THE COLUMN LINES SUCH THAT THE JOINT SPACING DOES NOT EXCEED 36 TIMES THE SLAB THICKNESS NOR 16 FEET, WHICHEVER IS LESS.

14 TYPICAL CONSTRUCTION AND CONTROL JOINTS - SLAB-ON-GRADE

NO SCALE

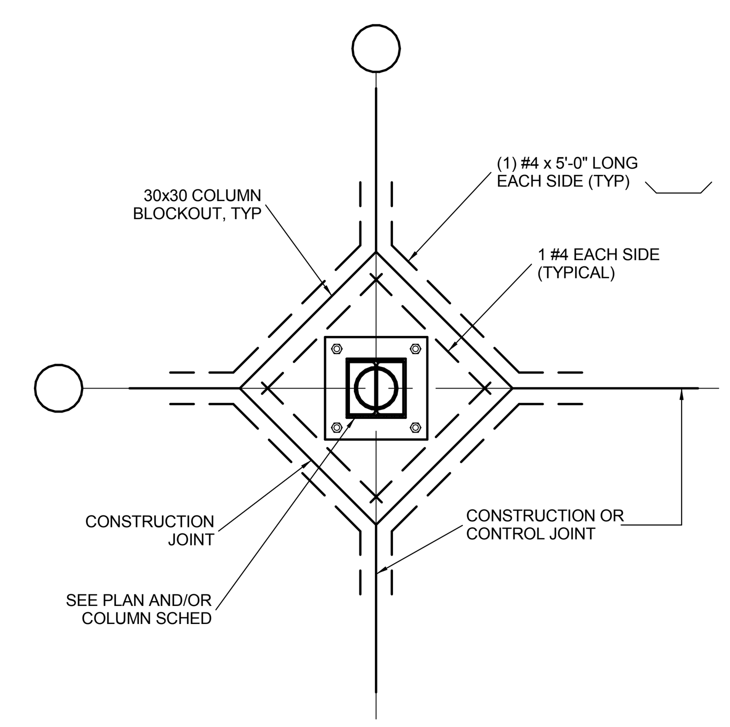

12 STANDARD INTERIOR COL BLOCK-OUT DETAIL

NO SCALE

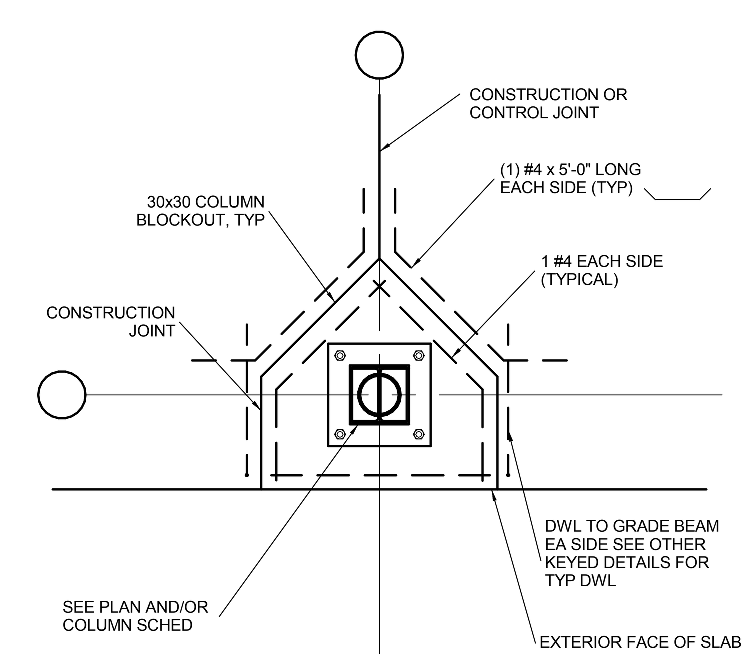

11 STANDARD EXTERIOR COL BLOCK-OUT DETAIL

NO SCALE

HOUSTON AIRPORT SYSTEM

APPROVED

HOUSTON AIRPORT SYSTEM DIRECTOR OR DESIGNATED PDC REPRESENTATIVE	DATE

JACOBS
5985 Rogerdale Road
Houston, Texas
77072

P 832.351.6000
F 281.776.2501
W www.jacobs.com

TBPE Firm #2966

HENDERSON ROGERS
structural engineers
2603 Augusta, Suite 800
Houston, Texas 77057
713.430.5800 713.430.5888 fax
www.henderson-rogers.com

Seals:

INTERIM REVIEW ONLY
These documents are incomplete, and are released for interim review only and are not intended for regulatory approval, permit, or construction purposes.
Engineer: K. ELAINE ROGERS
Eng. Reg. No.: 65566
TBPE Firm Reg No: 2194
Date: 08/04/2015

Project Client:
Houston Airport System
Project Address

Project Managers Office

George Bush Intercontinental Airport (IAH)

115 Standifer St.
Humble, TX 77338

Number	Description	Date
	100% Bridging Documents	04 Aug 2015

Key Plan | Project North

0 60 120 180
GRAPHIC SCALE: As Noted on Drawings

Project No.:
Copyright: 2015 Jacobs Engineering
TDLR #:

Drawing Sheet Title:

FOUNDATION TYPICAL DETAILS

Drawing Sheet Number:

S-301

Owner's Drawing Sheet No.:

GROUT THICKNESS SCHEDULE	
MINIMUM BASE PLATE PLAN DIMENSION	MINIMUM GROUT THICKNESS
18" OR LESS	1"
19" TO 24"	1 1/2"
25" TO 30"	2"
31" TO 36"	2 1/2"
37" TO 42"	3"
43" TO 48"	3 1/2"
GREATER THAN 48"	REFER TO NOTE 2

NOTES:
1. REFER TO SPECIFICATIONS AND GENERAL NOTES FOR GROUT REQUIREMENTS.
2. ADD 1/2" GROUT THICKNESS FOR EACH ADDITIONAL 12" OF MINIMUM PLATE DIMENSION.

5 TYPICAL GROUT THICKNESS SCHEDULE
NO SCALE

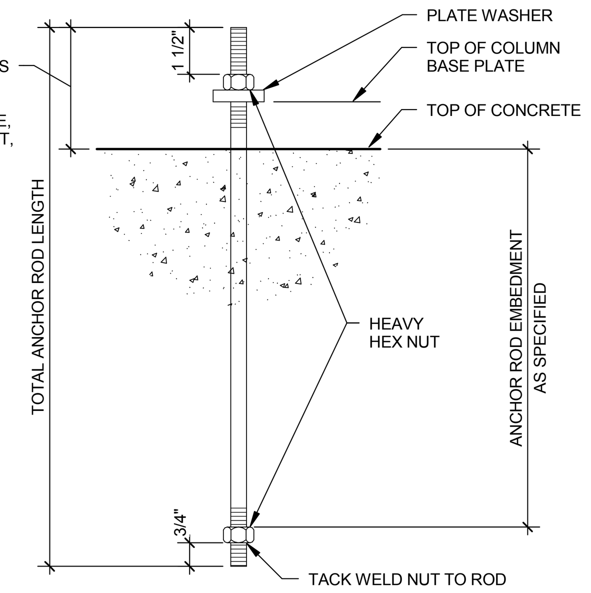

NOTES:
1. REFER TO COLUMN SCHEDULE FOR ANCHOR ROD SIZE AND EMBEDMENT.
2. UNLESS NOTED OTHERWISE, ALL ANCHOR ROD NUTS SHALL BE TIGHTENED TO A "SNUG TIGHT" CONDITION AS DEFINED BY AISC AFTER THE CONCRETE IS AT LEAST 14 DAYS OLD.
3. THE HOLE IN THE PLATE WASHER SHALL BE 1/16" LARGER THAN THE ROD DIAMETER.

05500-FN-ANROD-01
© COPYRIGHT WALTER P. MOORE AND ASSOCIATES, INC. 2009

4 TYPICAL ANCHOR ROD
NO SCALE

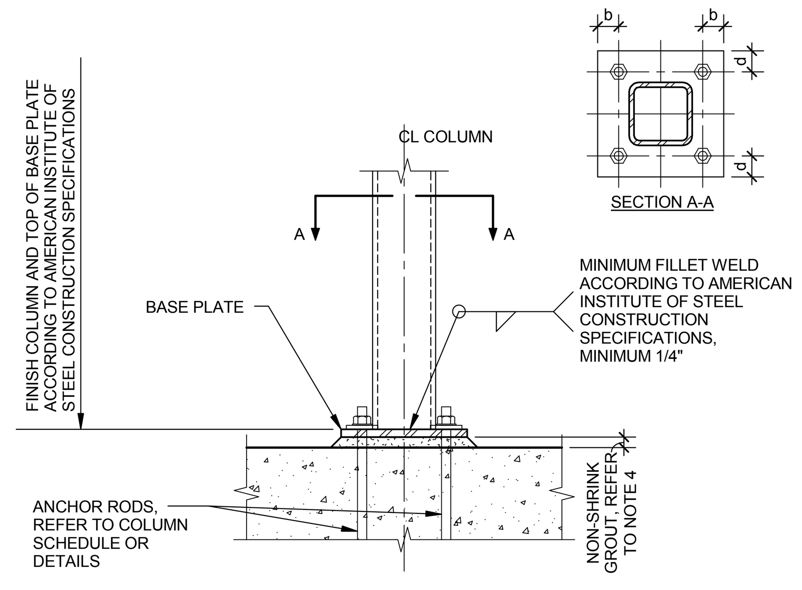

NOTES:
1. USE OVERSIZED HOLES FOR ANCHOR RODS ACCORDING TO AMERICAN INSTITUTE OF STEEL CONSTRUCTION.
2. PLATE WASHERS WITH STANDARD HOLES SHALL BE INSTALLED OVER OVERSIZED HOLES.
3. CONTRACTOR SHALL PROVIDE TEMPLATE FOR ANCHOR ROD INSTALLATION.
4. MINIMUM GROUT THICKNESS IS 1" UNLESS NOTED OTHERWISE ON PLANS, DETAILS, OR IN GROUT THICKNESS SCHEDULE.

3 TYPICAL RECTANGULAR/SQUARE HSS COLUMN BASE CONNECTION
NO SCALE

DRILLED PIER REINFORCEMENT SCHEDULE		
DIAMETER (INCHES)	VERTICAL REINFORCEMENT	TIES
12	3-#4	#3@8"
14, 16	4-#5	#3@10"
18, 20	4-#6	#3@12"
24,26	5-#7	#3@12"
30	5-#8	#3@12"
36	5-#9	#3@12"
42	7-#9	#3@12"
48	7-#10	#3@12"
54	9-#10	#3@12"
60	9-#11	#4@12"
66	11-#11	#4@12"
72	13-#11	#4@12"

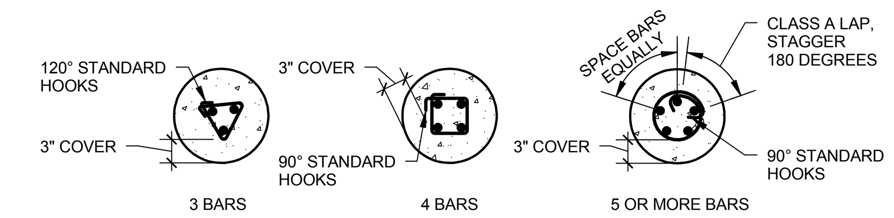

BAR PLACEMENT PLANS

9 DRILLED PIER REINFORCEMENT SCHEDULE
NO SCALE

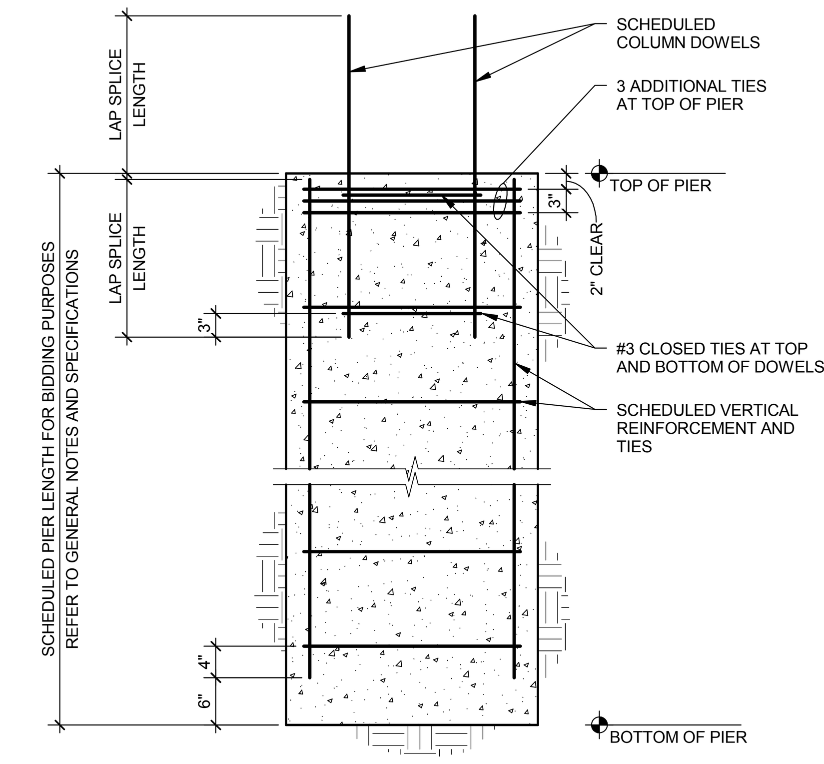

1 TYPICAL DRILLED PIER WITHOUT CAP
NO SCALE

BASE PLATE SCHEDULE										
MARK	COLUMN SIZE	BASE PLATE DIMENSIONS			ANCHOR ROD DIMENSIONS		ANCHOR ROD LAYOUT			REMARKS
		T (in)	B (in)	D (in)	DIAMETER	EMBEDMENT	TYPE	b	d	
A	HSS5x5x1/4	3/4	12	12	3/4"	1'-0"	A	1 1/2"	1 1/2"	
B	HSS6x6x1/4	3/4	12	12	3/4"	1'-0"	A	1 1/2"	1 1/2"	
C	HSS7x7x3/8	1	14	14	3/4"	1'-4"	A	1 1/2"	1 1/2"	
D	HSS8x8x3/8	1	14	14	3/4"	1'-4"	A	1 1/2"	1 1/2"	
E	HSS6x6x1/4	1 1/4	14	12	3/4"	1'-0"	B	1 1/2"	1 1/2"	AT BRACE LOCATION

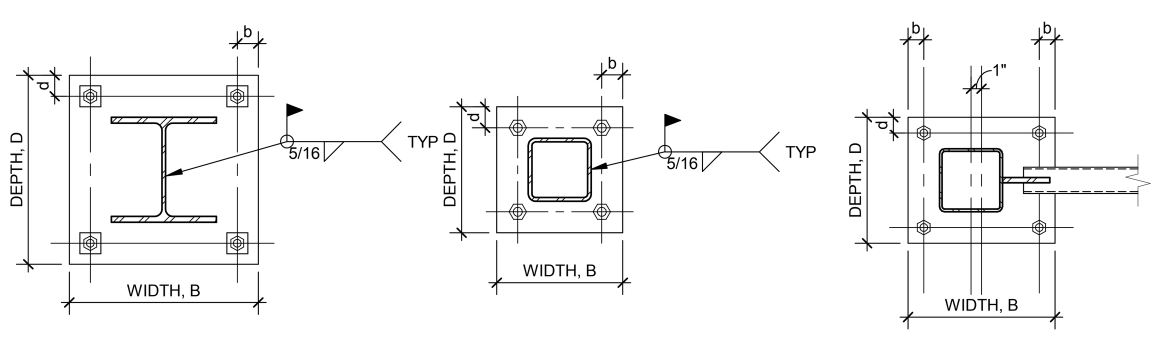

TYPE A

TYPE B

NOTE: REFERENCE DETAIL 3 AND 4/S3.03 FOR ADDITIONAL INFORMATION.

10 BASE PLATE SCHEDULE AND DETAILS
NO SCALE

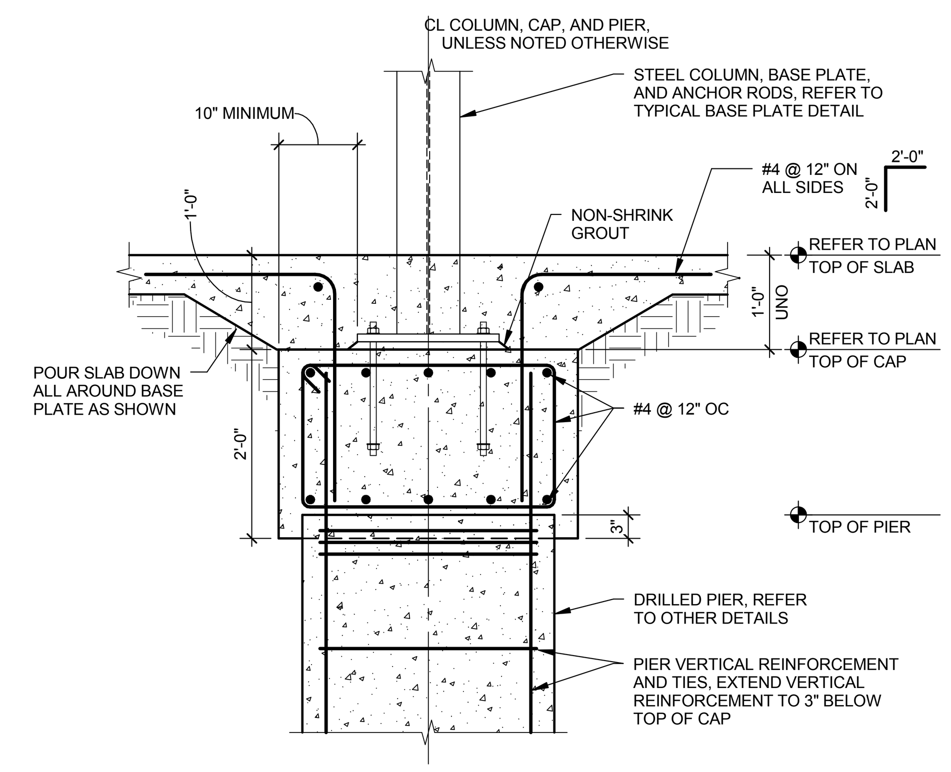

8 TYPICAL STEEL COLUMN ON DRILLED PIER WITH CAP
NO SCALE

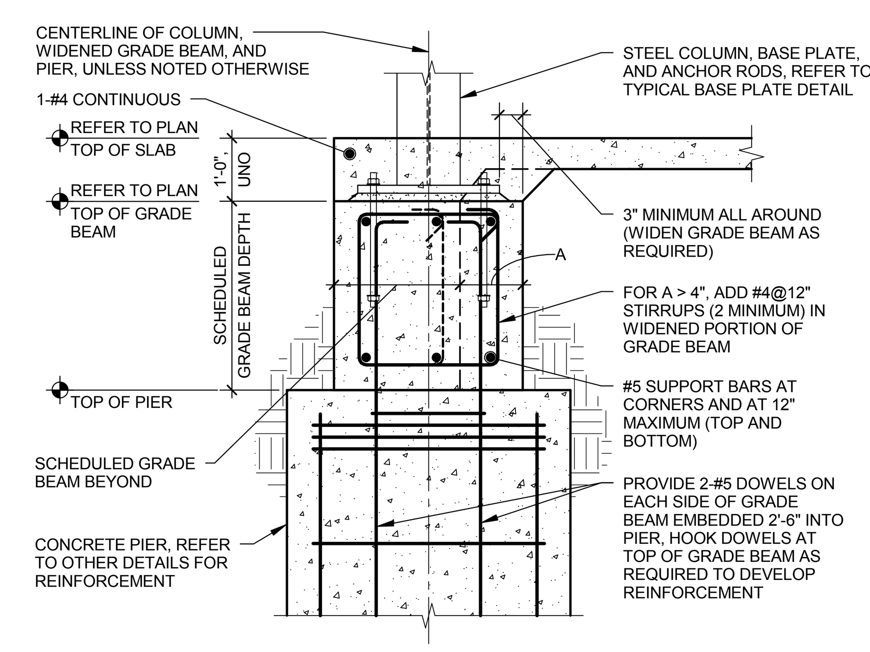

NOTES:
1. AT CONTRACTOR'S OPTION, EXTEND PIER VERTICAL REINFORCEMENT INTO GRADE BEAM WITHOUT SPLICE (IN LIEU OF DOWELS). WIDEN GRADE BEAM AS REQUIRED TO PROVIDE 3" MINIMUM CLEAR COVER ALL AROUND.

7 EXTERIOR GRADE BEAM AT STEEL COLUMN ON CONCRETE PIER
NO SCALE

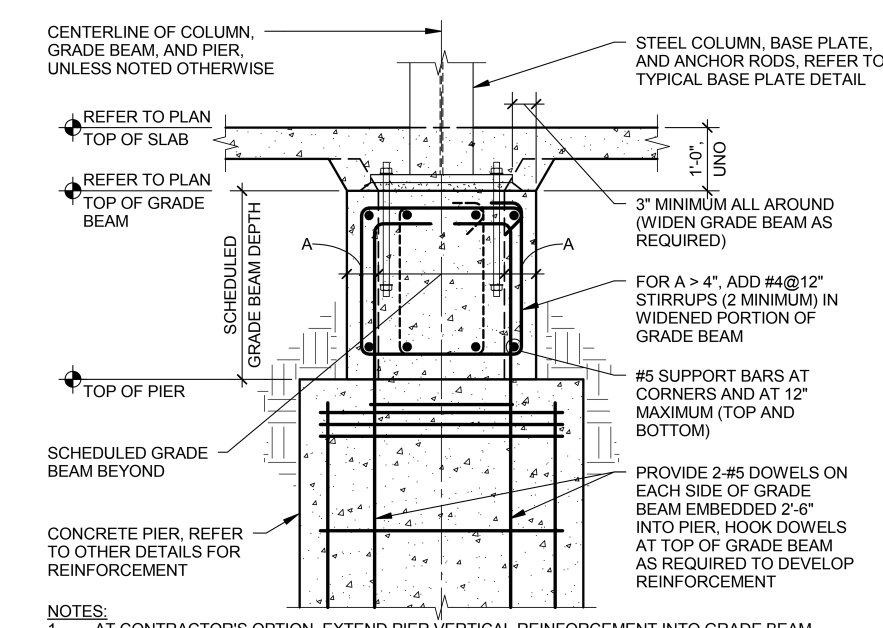

NOTES:
1. AT CONTRACTOR'S OPTION, EXTEND PIER VERTICAL REINFORCEMENT INTO GRADE BEAM WITHOUT SPLICE (IN LIEU OF DOWELS). WIDEN GRADE BEAM AS REQUIRED TO PROVIDE 3" MINIMUM CLEAR COVER ALL AROUND.

6 TYPICAL INTERIOR GRADE BEAM AT STEEL COLUMN ON CONCRETE PIER
NO SCALE

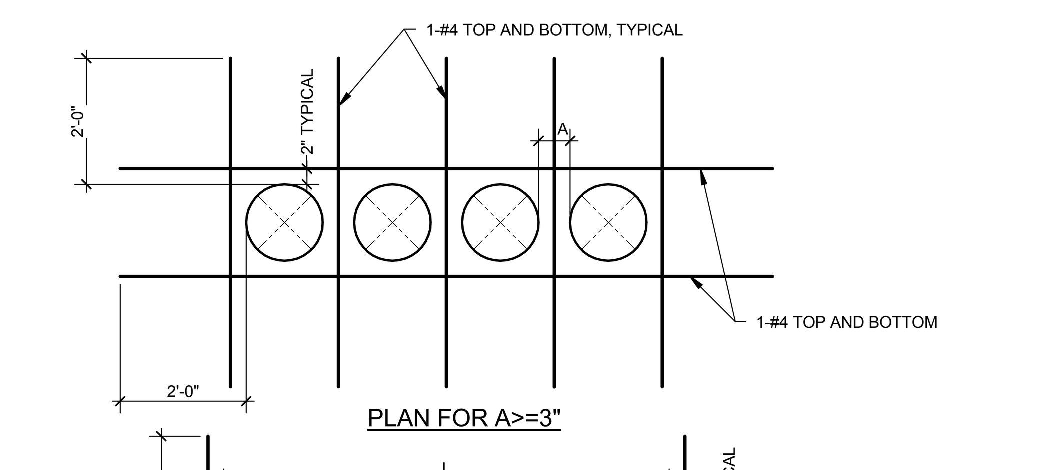

PLAN FOR A>=3"

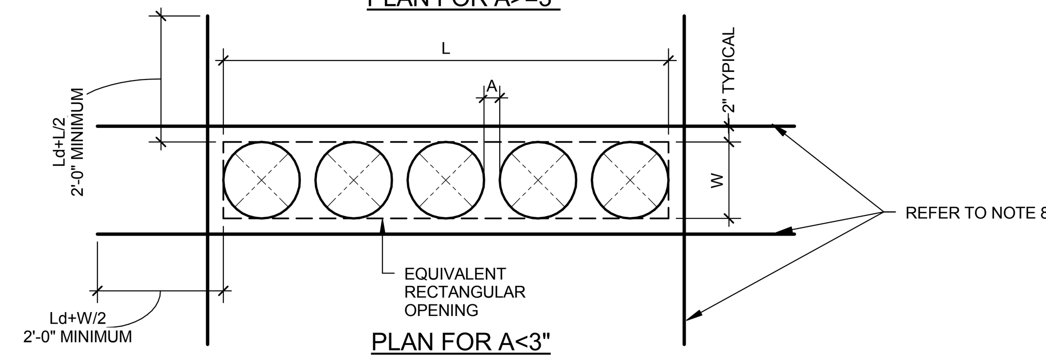

PLAN FOR A<3"

NOTES:
1. WHERE CLEAR SPACING BETWEEN ADJACENT SLEEVES IS LESS THAN 3", THE SLEEVE GROUP SHALL BE TREATED AS AN EQUIVALENT RECTANGULAR OPENING WITH LENGTH "L" AND WIDTH "W" AS SHOWN.
2. WHERE CLEAR SPACING BETWEEN ADJACENT SLEEVES IS GREATER THAN OR EQUAL TO 3", SCHEDULED SLAB BAR REINFORCEMENT SHALL BE OFFSET AS REQUIRED TO MISS SLEEVES.
3. REINFORCEMENT SHOWN IS IN ADDITION TO SCHEDULED SLAB REINFORCEMENT.
4. SCHEDULED SLAB MESH REINFORCEMENT MAY BE CUT AS REQUIRED TO MISS PIPE SLEEVES.
5. REFER TO MECHANICAL, ELECTRICAL, AND PLUMBING DRAWINGS FOR LOCATION AND SIZE OF SLEEVES.
6. ISOLATED PIPE SLEEVES THAT ARE SMALLER THAN 5" AND DO NOT INTERRUPT REINFORCEMENT DO NOT REQUIRE THE USE OF THIS DETAIL.
7. THIS DETAIL SHOULD NOT BE USED FOR OPENING GROUPS WITH DIAMETERS LARGER THAN 12". CONSULT STRUCTURAL ENGINEER FOR FRAMING OF SUCH CONDITIONS.
8. PROVIDE HALF OF INTERRUPTED REINFORCEMENT PLUS ONE ADDITIONAL BAR OF SAME SIZE ON EACH SIDE OF EQUIVALENT RECTANGULAR OPENING. PROVIDE A MINIMUM OF 1-#4 TOP AND BOTTOM EACH SIDE OF OPENING.

14 ADDITIONAL REINFORCEMENT AROUND PIPE SLEEVES
NO SCALE

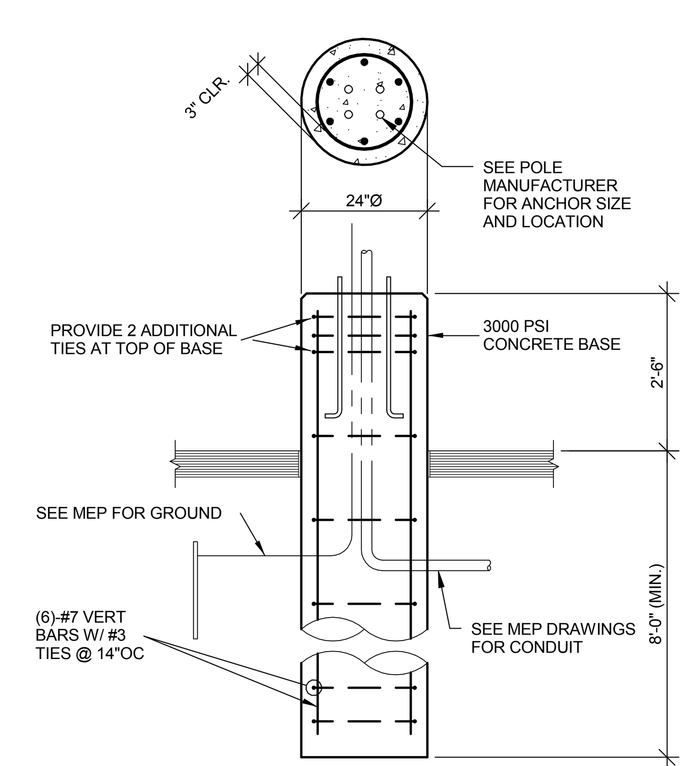

12 LIGHT POLE FOUNDATION
NO SCALE

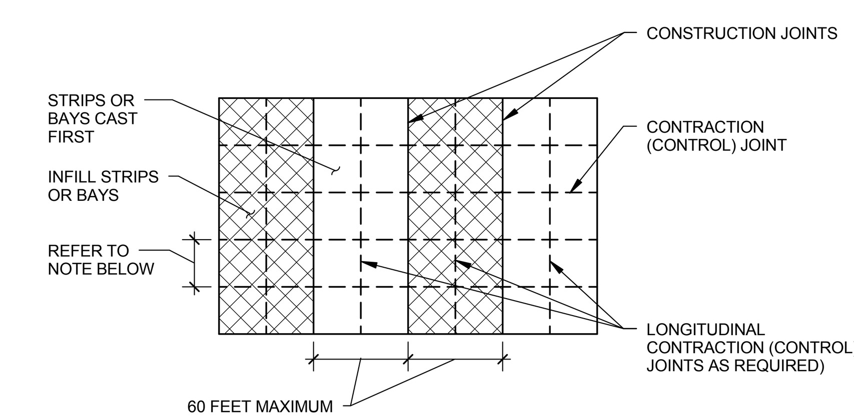

NOTES:
1. REFER TO "TYPICAL CONSTRUCTION AND CONTROL JOINTS - SLAB-ON-GRADE" FOR ADDITIONAL INFORMATION, INCLUDING JOINT SPACING REQUIREMENTS.

11 TYPICAL LONG STRIP CONSTRUCTION SCHEMATIC JOINT LAYOUT
NO SCALE

HOUSTON AIRPORT SYSTEM

APPROVED

HOUSTON AIRPORT SYSTEM DIRECTOR OR DESIGNATED PDC REPRESENTATIVE — DATE

JACOBS
5985 Rogerdale Road
Houston, Texas
77072

P 832.351.6000
F 281.776.2501
W www.jacobs.com

TBPE Firm #2966

HENDERSON ROGERS
structural engineers
2603 Augusta, Suite 800
Houston, Texas 77057
713.430.5800 713.430.5888 fax
www.henderson-rogers.com

Seals:

INTERIM REVIEW ONLY
These documents are incomplete, and are released for interim review only and are not intended for regulatory approval, permit, or construction purposes.
Engineer: K. ELAINE ROGERS
Eng. Reg. No.: 65566
TBPE Firm Reg No: 2194
Date: 08/04/2015

Project Client:
Houston Airport System
Project Address

Project Managers Office

George Bush
Intercontinental Airport (IAH)

115 Standifer St.
Humble, TX 77338

Number	Description	Date
	100% Bridging Documents	04 Aug 2015

Key Plan — Project North

0 60 120 180
GRAPHIC SCALE: As Noted on Drawings

Project No.:
Copyright: 2015 Jacobs Engineering
TDLR #:

Drawing Sheet Title:

FOUNDATION TYPICAL DETAILS

Drawing Sheet Number:

S-302

Owner's Drawing Sheet No.:

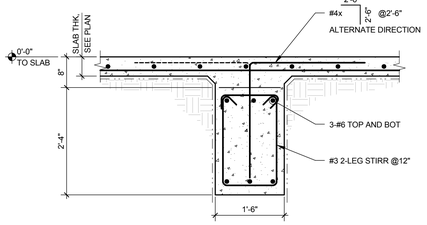

5 SECTION
3/4" = 1'-0"

NOTE:
SEE TYPICAL DETAILS FOR ADD'L INF'O ON SLAB-ON-GRADE BLOCKOUT AROUND STEEL COLUMN.

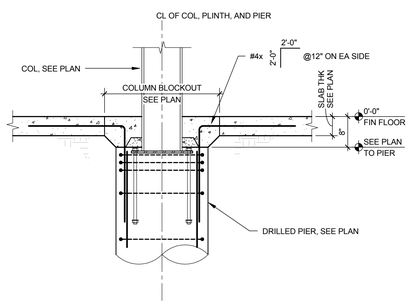

4 SECTION
3/4" = 1'-0"

REFER TO 1 & 2/S-310 FOR ADD'L INFO

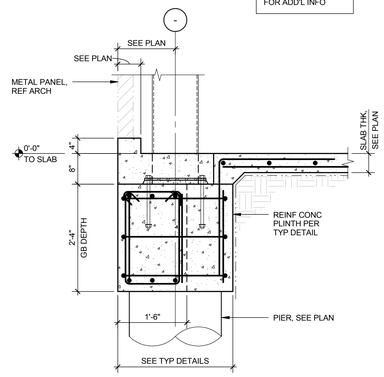

3 SECTION
3/4" = 1'-0"

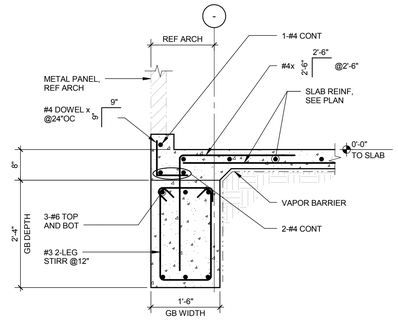

2 SECTION
3/4" = 1'-0"

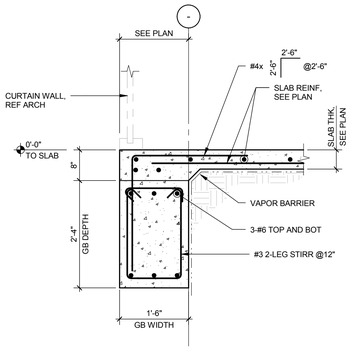

1 SECTION
3/4" = 1'-0"

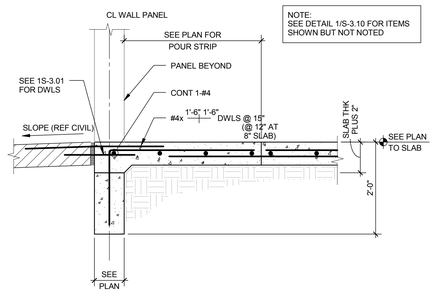

10 SECTION AT DOOR
3/4" = 1'-0"

NOTE:
SEE DETAIL 1/S-3.10 FOR ITEMS SHOWN BUT NOT NOTED

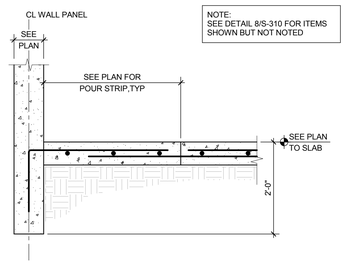

9 SECTION AT MID-SPAN
3/4" = 1'-0"

NOTE:
SEE DETAIL 8/S-310 FOR ITEMS SHOWN BUT NOT NOTED

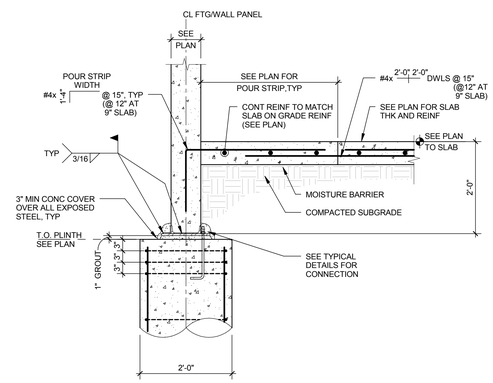

8 SECTION AT PIER
3/4" = 1'-0"

NOTE:
SEE 6/S3.04 FOR ITEMS SHOWN BUT NOT NOTED.

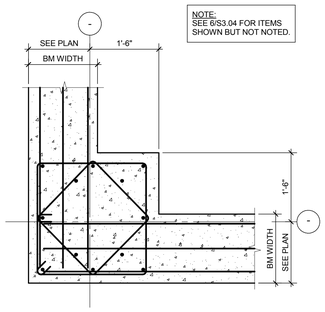

7 TYPICAL AT CORNER CONCRETE PLINTH
3/4" = 1'-0"

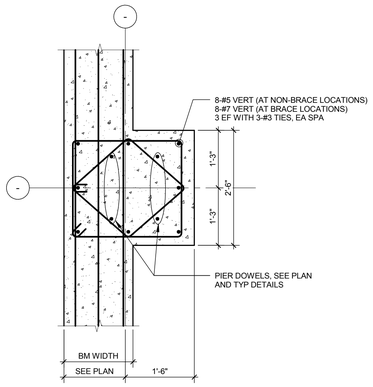

6 TYPICAL AT CONCRETE PLINTH
3/4" = 1'-0"

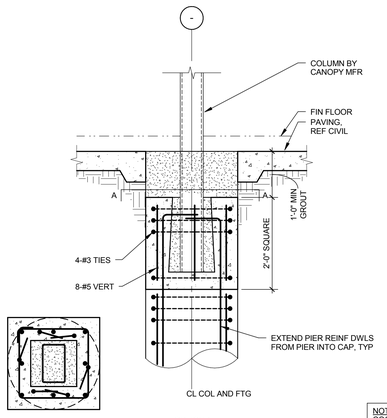

NOTE:
COORDINATE COLUMN ANCHORAGE REQUIREMENTS WITH CANOPY MANUFACTURER.

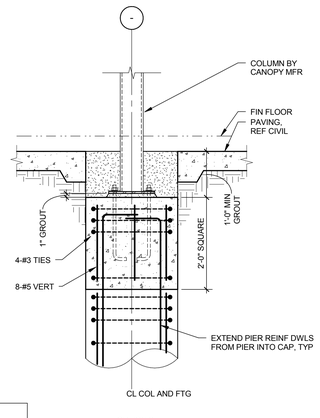

12 CANOPY FOUNDATION
3/4" = 1'-0"

HOUSTON AIRPORT SYSTEM

APPROVED

HOUSTON AIRPORT SYSTEM
DIRECTOR OR DESIGNATED PDC REPRESENTATIVE
DATE

JACOBS
5985 Rogerdale Road
Houston, Texas
77072

P 832.351.6000
F 281.776.2501
W www.jacobs.com

TBPE Firm #2966

HENDERSON ROGERS
structural engineers
2603 Augusta, Suite 800
Houston, Texas 77057
713.430.5800 713.430.5888 fax
www.henderson-rogers.com

Seals:

INTERIM REVIEW ONLY

These documents are incomplete, and are released for interim review only and are not intended for regulatory approval, permit, or construction purposes.

Engineer: K. ELAINE ROGERS
Eng. Reg. No.: 65566
TBPE Firm Reg No: 2194
Date: 08/04/2015

Project Client:
Houston Airport System
Project Address

Project Managers Office

George Bush
Intercontinental Airport (IAH)

115 Standifer St.
Humble, TX 77338

Number	Description	Date
	100% Bridging Documents	04 Aug 2015

Key Plan
Project North

0 60 120 180
GRAPHIC SCALE: As Noted on Drawings

Project No.:

Copyright: 2015 Jacobs Engineering

TDLR #:

Drawing Sheet Title:

FOUNDATION DETAILS

Drawing Sheet Number:

S-310

Owner's Drawing Sheet No.:

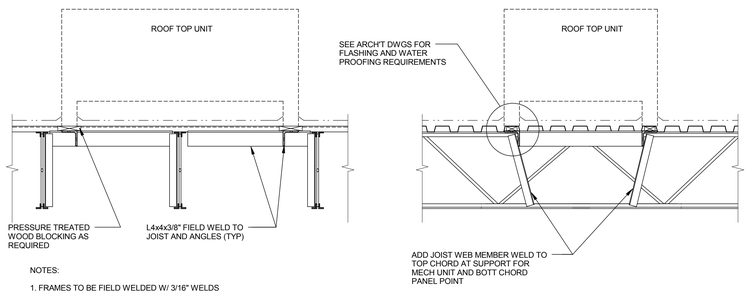

NOTES:

1. FRAMES TO BE FIELD WELDED W/ 3/16" WELDS
2. REFER TO ARCH'T/MECH DRAWINGS FOR LOCATION OF ANGLES AND BLOCKING

5 TYPICAL SUPPORT FOR ROOF TOP UNITS

NTS

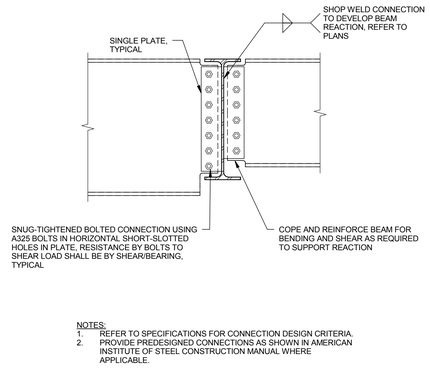

NOTES:

1. REFER TO SPECIFICATIONS FOR CONNECTION DESIGN CRITERIA.
2. PROVIDE PREDESIGNED CONNECTIONS AS SHOWN IN AMERICAN INSTITUTE OF STEEL CONSTRUCTION MANUAL WHERE APPLICABLE.

3 TYPICAL BEAM-TO-BEAM SHEAR CONNECTION

NO SCALE

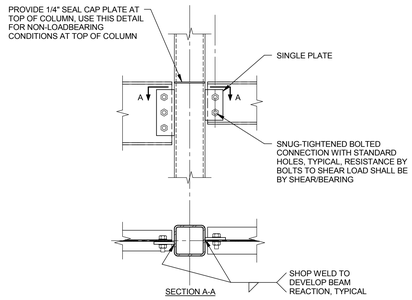

NOTES:

1. REFER TO SPECIFICATIONS FOR CONNECTION DESIGN CRITERIA.
2. REFER TO PLAN FOR CONNECTION DESIGN REACTIONS.

2 TYPICAL SHEAR CONNECTION AT RECTANGULAR/SQUARE HSS COLUMN

NO SCALE

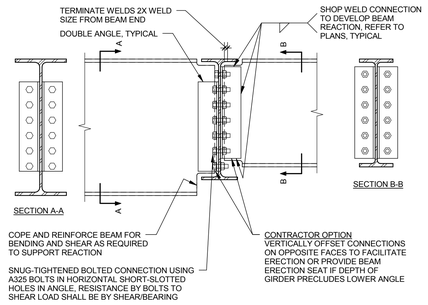

NOTES:

1. REFER TO SPECIFICATIONS FOR CONNECTION DESIGN CRITERIA.
2. PROVIDE PREDESIGNED CONNECTIONS AS SHOWN IN AMERICAN INSTITUTE OF STEEL CONSTRUCTION MANUAL WHERE APPLICABLE.

1 TYPICAL BEAM-TO-BEAM SHEAR CONNECTION

NO SCALE

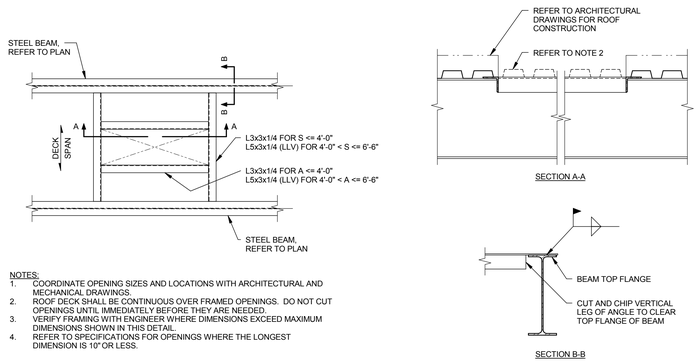

NOTES:

1. COORDINATE OPENING SIZES AND LOCATIONS WITH ARCHITECTURAL AND MECHANICAL DRAWINGS.
2. ROOF DECK SHALL BE CONTINUOUS OVER FRAMED OPENINGS. DO NOT CUT OPENINGS UNTIL IMMEDIATELY BEFORE THEY ARE NEEDED.
3. VERIFY FRAMING WITH ENGINEER WHERE DIMENSIONS EXCEED MAXIMUM DIMENSIONS SHOWN IN THIS DETAIL.
4. REFER TO SPECIFICATIONS FOR OPENINGS WHERE THE LONGEST DIMENSION IS 10"OR LESS.

10 TYPICAL FRAMED OPENING IN ROOF DECK

NO SCALE

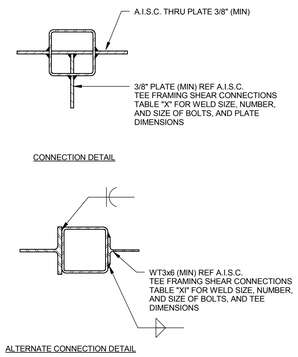

8 HSS COLUMN THRU PLATE CONNECTION

NTS

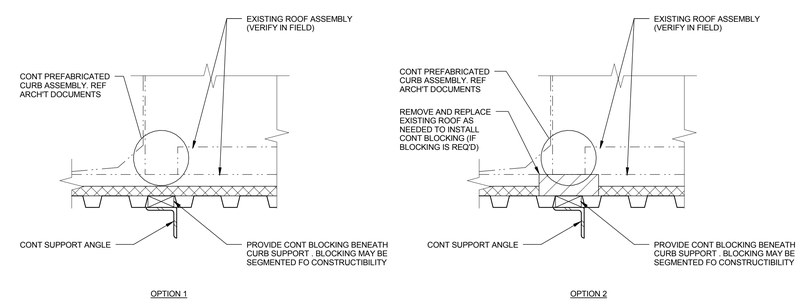

7 BLOCKING AT CURB

NTS

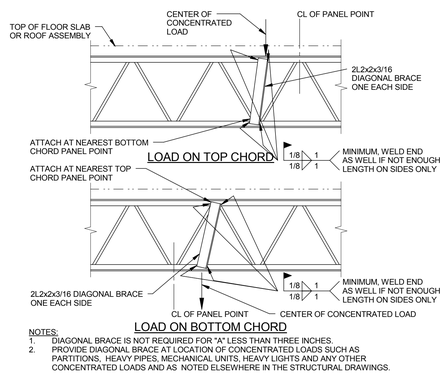

NOTES:

1. DIAGONAL BRACE IS NOT REQUIRED FOR "A" LESS THAN THREE INCHES.
2. PROVIDE DIAGONAL BRACE AT LOCATION OF CONCENTRATED LOADS SUCH AS PARTITIONS, HEAVY PIPES, MECHANICAL UNITS, HEAVY LIGHTS AND ANY OTHER CONCENTRATED LOADS AND AS NOTED ELSEWHERE IN THE STRUCTURAL DRAWINGS.

15 EXAMPLE STIFFENING OF JOIST FOR CONCENTRATED LOADS

NTS

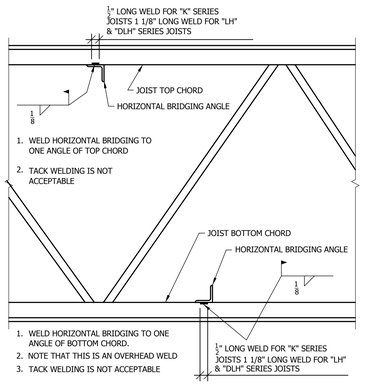

14 HORIZONTAL BRIDGING CONNECTION

NO SCALE

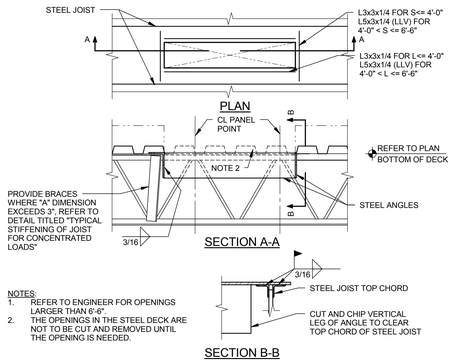

NOTES:

1. REFER TO ENGINEER FOR OPENINGS LARGER THAN 6'-6".
2. THE OPENINGS IN THE STEEL DECK ARE NOT TO BE CUT AND REMOVED UNTIL THE OPENING IS NEEDED.

13 TYPICAL ROOF OPENING FOR JOIST CONSTRUCTION

1" = 1'-0"

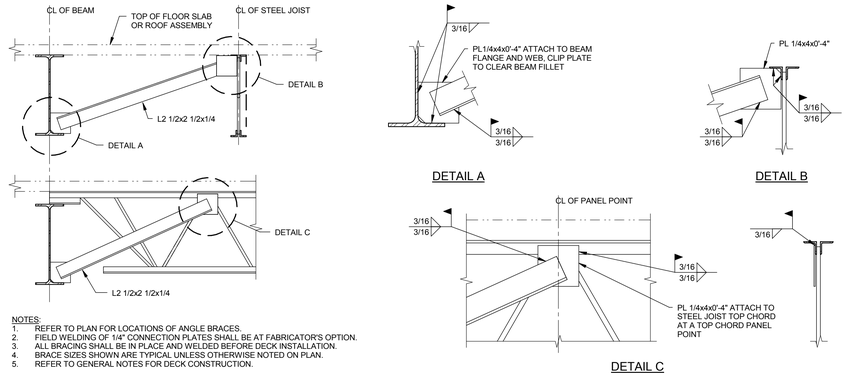

NOTES:

1. REFER TO PLAN FOR LOCATIONS OF ANGLE BRACES.
2. FIELD WELDING OF 1/4" CONNECTION PLATES SHALL BE AT FABRICATOR'S OPTION.
3. ALL BRACING SHALL BE IN PLACE AND WELDED BEFORE DECK INSTALLATION.
4. BRACE SIZES SHOWN ARE TYPICAL UNLESS OTHERWISE NOTED ON PLAN.
5. REFER TO GENERAL NOTES FOR DECK CONSTRUCTION.

12 TYPICAL BEAM BOTTOM FLANGE BRACE (STEEL JOIST CONSTRUCTION)

NO SCALE

HOUSTON AIRPORT SYSTEM

APPROVED

HOUSTON AIRPORT SYSTEM
DIRECTOR OR DESIGNATED PDC REPRESENTATIVE

DATE

JACOBS

5985 Rogerdale Road
Houston, Texas
77072

P 832.351.6000
F 281.776.2501
W www.jacobs.com

TBPE Firm #2966

HENDERSON ROGERS
structural engineers
2603 Augusta, Suite 800
Houston, Texas 77057
713.430.5800 713.430.5888 fax
www.henderson-rogers.com

Seals:

INTERIM REVIEW ONLY

These documents are incomplete, and are released for interim review only and are not intended for regulatory approval, permit, or construction purposes.

Engineer: K. ELAINE ROGERS
Eng. Reg. No.: 65566
TBPE Firm Reg No: 2194
Date: 08/04/2015

Project Client:
Houston Airport System
Project Address

Project Managers Office

George Bush Intercontinental Airport (IAH)

115 Standifer St.
Humble, TX 77338

Number	Description	Date
	100% Bridging Documents	04 Aug 2015

Key Plan

Project North

0 60 120 180
GRAPHIC SCALE: As Noted on Drawings

Project No.:

Copyright: 2015 Jacobs Engineering

TDLR #:

Drawing Sheet Title:

FRAMING TYPICAL DETAILS

Drawing Sheet Number:

S-400

Owner's Drawing Sheet No.:

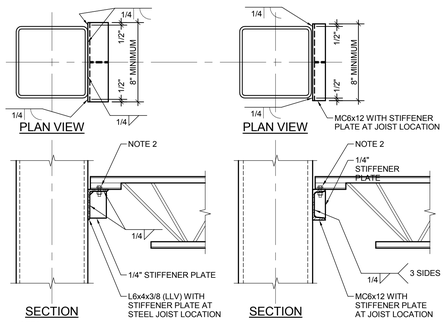

NOTES:
1. THIS DETAIL FOR USE WITH K SERIES JOISTS ONLY.
2. PROVIDE BOLTED CONNECTION AS PER STEEL JOIST INSTITUTE SPECIFICATIONS.
3. ALL JOIST SEAT WELDS AS PER AISC MINIMUM OR AS REQUIRED TO DEVELOP JOIST REACTION, WHICHEVER IS GREATER.

5 TYPICAL DETAIL JOIST SEAT AT COLUMN
NTS

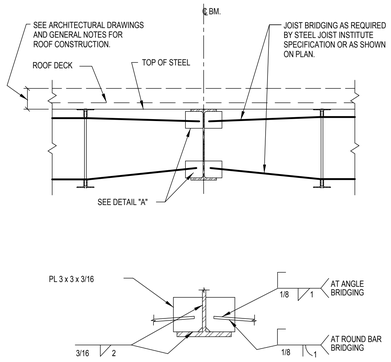

NOTE:
1. ROOF CONSTRUCTION NOT SHOWN FOR CLARITY.

TYPICAL DETAIL
OPEN WEB STEEL JOIST AT INTERIOR
TIE BEAM, ROOF (ROOF DECK)

4 .
NTS

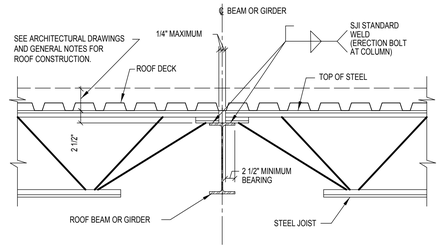

NOTES:
1. ROOF CONSTRUCTION NOT SHOWN FOR CLARITY.
2. WHEN WIDTH OF BEAM FLANGE IS LESS THAN 5", OFFSET THE LOCATION OF JOISTS ON ONE SIDE OF BEAM.

TYPICAL DETAIL
OPEN WEB STEEL JOIST AT INTERIOR
STEEL BEAM, ROOF (ROOF DECK)

3 .
NTS

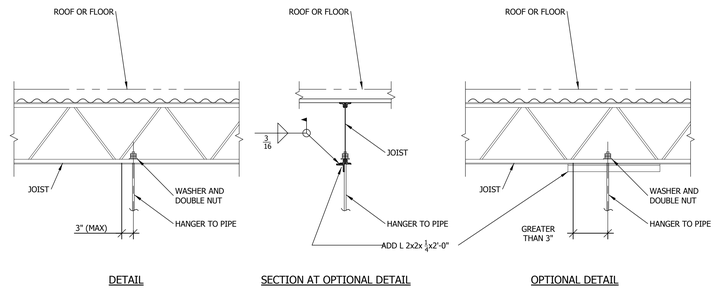

2 TYPICAL JOIST HANGER DETAIL
NO SCALE

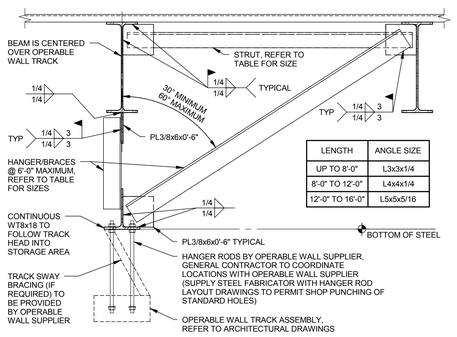

LENGTH	ANGLE SIZE
UP TO 8'-0"	L3x3x1/4
8'-0" TO 12'-0"	L4x4x1/4
12'-0" TO 16'-0"	L5x5x5/16

10 OPERABLE WALL SUPPORT AT ROOF BEAM
NO SCALE

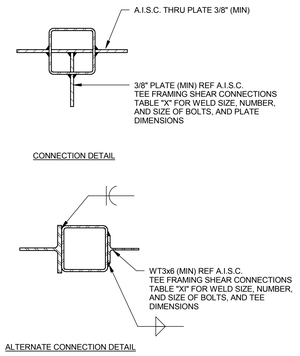

9 HSS COLUMN THRU PLATE CONNECTION
NTS

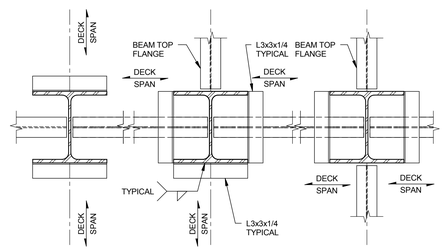

8 TYPICAL STEEL DECK SUPPORT AT STEEL COLUMNS
NO SCALE

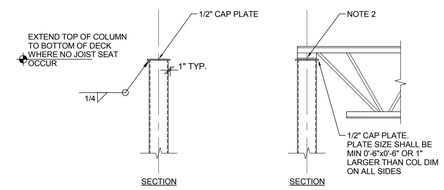

NOTES:
1. THIS DETAIL FOR USE WITH K SERIES JOISTS ONLY.
2. PROVIDE BOLTED CONNECTION AS PER STEEL JOIST INSTITUTE SPECIFICATIONS.
3. ALL JOIST SEAT WELDS AS PER AISC MINIMUM OR AS REQUIRED TO DEVELOP JOIST REACTION, WHICHEVER IS GREATER.

7 TYPICAL JOIST SEAT AT HSS COLUMN
3/4" = 1'-0"

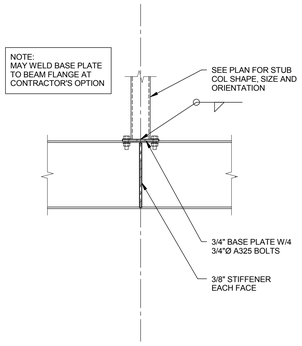

6 STANDARD STUB COLUMN DETAIL
3/4" = 1'-0"

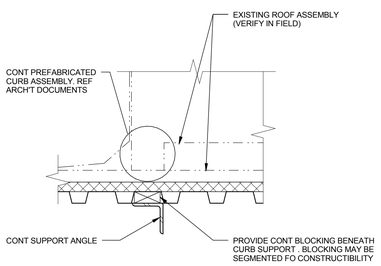

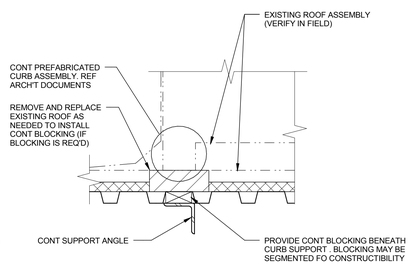

14 BLOCKING AT CURB
NTS

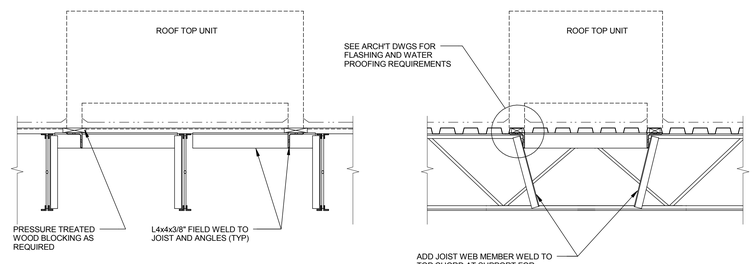

NOTES:
1. FRAMES TO BE FIELD WELDED W/ 3/16" WELDS
2. REFER TO ARCH'T/MECH DRAWINGS FOR LOCATION OF ANGLES AND BLOCKING

12 TYPICAL SUPPORT FOR ROOF TOP UNITS
NTS

HOUSTON AIRPORT SYSTEM

APPROVED

HOUSTON AIRPORT SYSTEM
DIRECTOR OR DESIGNATED PDC REPRESENTATIVE
DATE

JACOBS
5985 Rogerdale Road
Houston, Texas
77072

P 832.351.6000
F 281.776.2501
W www.jacobs.com

TBPE Firm #2966

HENDERSON ROGERS
structural engineers
2603 Augusta, Suite 800
Houston, Texas 77057
713.430.5800 713.430.5888 fax
www.henderson-rogers.com

Seals:

INTERIM REVIEW ONLY
These documents are incomplete, and are released for interim review only and are not intended for regulatory approval, permit, or construction purposes.
Engineer: K. ELAINE ROGERS
Eng. Reg. No.: 65566
TBPE Firm Reg No: 2194
Date: 06/04/2015

Project Client:
Houston Airport System
Project Address

Project Managers Office

George Bush Intercontinental Airport (IAH)

115 Standifer St.
Humble, TX 77338

Number	Description	Date
	100% Bridging Documents	04 Aug 2015

Key Plan
Project North

0 60 120 180
GRAPHIC SCALE: As Noted on Drawings

Project No.:

Copyright: 2015 Jacobs Engineering

TDLR #:

Drawing Sheet Title:

FRAMING TYPICAL DETAILS

Drawing Sheet Number:

S-401

Owner's Drawing Sheet No.:

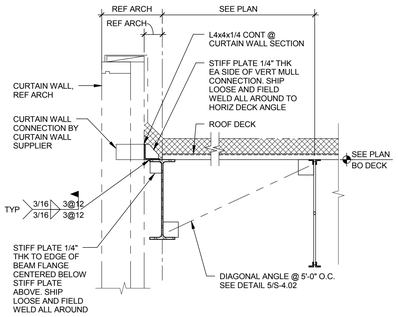

5 SECTION
3/4" = 1'-0"

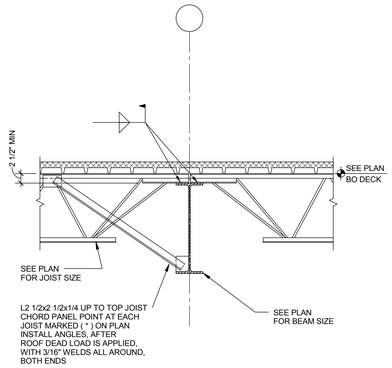

4 SECTION
3/4" = 1'-0"

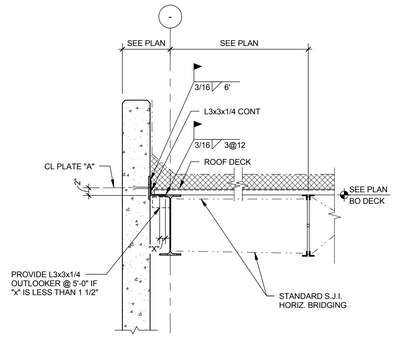

3 SECTION
3/4" = 1'-0"

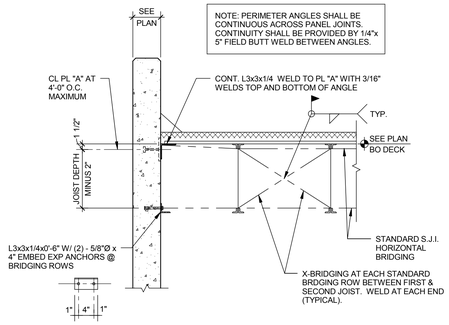

2 SECTION
3/4" = 1'-0"

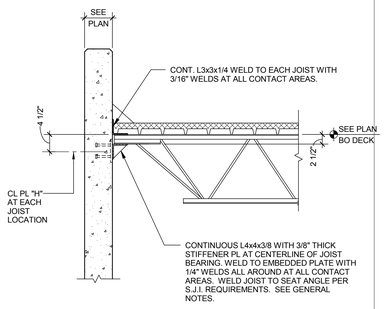

1 SECTION
3/4" = 1'-0"

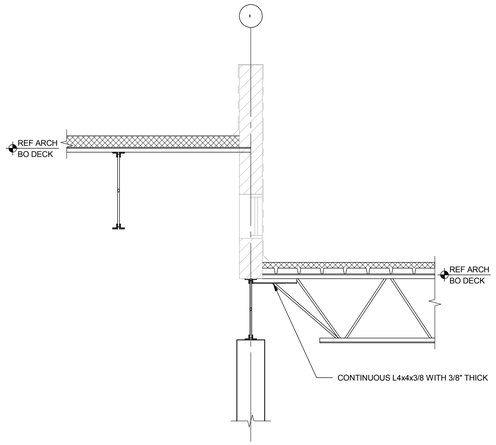

8 SECTION
3/4" = 1'-0"

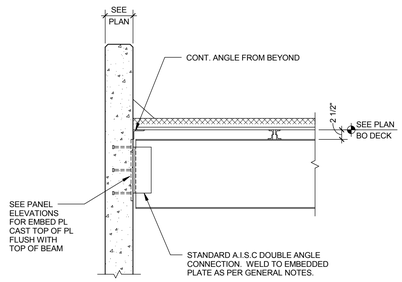

7 SECTION
3/4" = 1'-0"

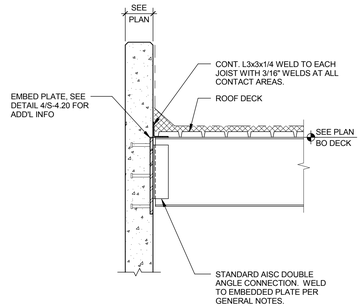

6 SECTION
3/4" = 1'-0"

HOUSTON AIRPORT SYSTEM

APPROVED

HOUSTON AIRPORT SYSTEM
DIRECTOR OR DESIGNATED PDC REPRESENTATIVE

DATE

JACOBS
5985 Rogerdale Road
Houston, Texas
77072

P 832.351.6000
F 281.776.2501
W www.jacobs.com

TBPE Firm #2966

HENDERSON ROGERS
structural engineers
2603 Augusta, Suite 800
Houston, Texas 77057
713.430.5800 713.430.5888 fax
www.henderson-rogers.com

Seals:

INTERIM REVIEW ONLY

These documents are incomplete, and are released for interim review only and are not intended for regulatory approval, permit, or construction purposes.

Engineer: K. ELAINE ROGERS
Eng. Reg. No.: 65566
TBPE Firm Reg No: 2194
Date: 08/04/2015

Project Client:
Houston Airport System
Project Address

Project Managers Office

George Bush Intercontinental Airport (IAH)

115 Standifer St.
Humble, TX 77338

Number	Description	Date
	100% Bridging Documents	04 Aug 2015

Key Plan

Project North

0 60 120 180
GRAPHIC SCALE: As Noted on Drawings

Project No.:

Copyright: 2015 Jacobs Engineering

TDLR #:

Drawing Sheet Title:

ROOF FRAMING DETAILS

Drawing Sheet Number:

S-410

Owner's Drawing Sheet No.:

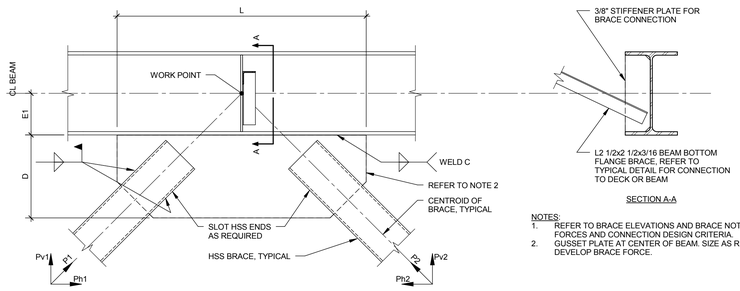

NOTES:
1. REFER TO BRACE ELEVATIONS AND BRACE NOTES FOR FORCES AND CONNECTION DESIGN CRITERIA.
2. GUSSET PLATE AT CENTER OF BEAM. SIZE AS REQUIRED TO DEVELOP BRACE FORCE.

5 BRACED FRAME CONNECTION

NO SCALE

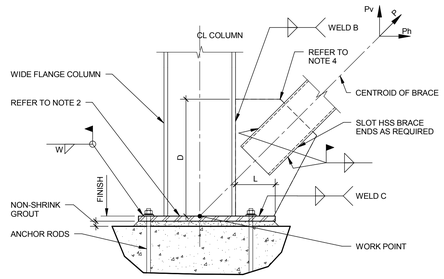

NOTES:
1. REFER TO COLUMN SCHEDULE, PLANS, OR DETAILS FOR ELEVATION OF BASE PLATE.
2. REFER TO TYPICAL COLUMN BASE PLATE DETAIL FOR ADDITIONAL INFORMATION.
3. REFER TO BRACE ELEVATIONS AND BRACE NOTES FOR FORCES AND CONNECTION DESIGN CRITERIA.
4. GUSSET PLATE AT CENTER OF COLUMN. SIZE AS REQUIRED TO DEVELOP BRACE FORCE.

3 BRACED FRAME CONNECTION AT FOUNDATION

NO SCALE

BRACED FRAME NOTES:

1. CONNECTION DESIGN FORCES. FORCES SHOWN ON THE BRACED FRAME ELEVATIONS ARE LOAD AND RESISTANCE FACTOR (LRFD) DESIGN FORCES. DO NOT REDUCE FORCES OR INCREASE LIMIT STRENGTH FOR WIND OR EARTHQUAKE.

2. DEFINITIONS:

   P = BRACE FORCE, TENSION OR COMPRESSION (KIPS)

   Pv = VERTICAL COMPONENT OF BRACE FORCE (KIPS)

   Ph = HORIZONTAL COMPONENT OF BRACE FORCE (KIPS)

   H = HORIZONTAL TRANSFER FORCE (KIPS). THIS IS THE HORIZONTAL FORCE THAT MUST BE TRANSFERRED THROUGH THE COLUMN. WHERE "H" IS NOT SHOWN ON THE BRACED FRAME ELEVATION, ASSUME "H" IS EQUAL TO ZERO.

   R = BRACE BEAM REACTION (KIPS). REFER TO BRACED FRAME ELEVATIONS OR PLAN. WHERE "R" IS NOT SHOWN ON THE DRAWINGS, USE SIMPLE BEAM REACTION EQUAL TO ONE-HALF THE UNIFORM LOAD CAPACITY FROM THE "TABLE OF UNIFORM LOAD CONSTANTS," AISC MANUAL, PART 2 FOR GIVEN SHAPE, SPAN, AND GRADE OF STEEL. FOR CHEVRON OR INVERTED V BRACING, THE BEAM SPAN SHALL BE TAKEN AS ONE HALF THE DISTANCE BETWEEN COLUMNS.

   NOTE THAT FORCES "H" AND "R" ARE NOT THE HORIZONTAL AND VERTICAL COMPONENTS OF THE BRACE FORCE.

3. BRACE TENSION MEMBERS. TENSION MEMBERS HAVE BEEN PROPORTIONED ASSUMING 85 PERCENT OF THE GROSS AREA OF THE MEMBER. CONNECTIONS REMOVING MORE THAN 15 PERCENT OF THE GROSS MEMBER AREA AT ANY CROSS SECTION SHALL BE REINFORCED WITH STEEL PLATES. THE REINFORCING PLATES SHALL BE EXTENDED ALONG THE MEMBER LENGTH BEYOND THE END OF THE CONNECTION AND WELDED TO THE MAIN MEMBER AS REQUIRED TO DEVELOP THE TENSILE STRENGTH OF THE REINFORCING PLATE.

4. CONNECTION DETAILS. CONNECTION DETAILS ARE SHOWN ON THE DRAWINGS. IT IS THE INTENT OF THE PLANS AND SPECIFICATIONS THAT, UNLESS SPECIFICALLY NOTED OTHERWISE, SHOP CONNECTIONS SHALL BE WELDED OR BOLTED AND THAT FIELD CONNECTIONS SHALL BE BOLTED. THE FABRICATOR SHALL SUBMIT DETAILS OF PROPOSED TYPICAL CONNECTIONS FOR ENGINEER REVIEW PRIOR TO PREPARATION OF DETAILED SHOP DRAWINGS.

5. CALCULATIONS. THE FABRICATOR SHALL SUBMIT CONNECTION DESIGN CALCULATIONS SIGNED AND SEALED BY A PROFESSIONAL ENGINEER REGISTERED IN THE STATE WHERE THE PROJECT IS LOCATED.

6. CONNECTION DESIGN. IN GENERAL, FOLLOW THE RECOMMENDATIONS IN THE PAPER "BRACING CONNECTIONS FOR HEAVY CONSTRUCTION," AISC JOURNAL, THIRD QUARTER 1984, VOL. 21. CONNECTION DESIGN CALCULATIONS SHALL INCLUDE BUT NOT NECESSARILY BE LIMITED TO THE FOLLOWING CHECKS.

   a. BRACE BEAM TO COLUMN CONNECTION

      1) "DOUBLE ANGLE A" TO COLUMN BOLTED CONNECTION. DESIGN BOLTS FOR COMBINED SHEAR "R" AND TENSION "H" INCLUDING THE EFFECTS OF PRYING ACTION CAUSED BY BENDING IN THE OUTSTANDING LEGS OF THE ANGLES.

      2) "DOUBLE ANGLE A" TO BEAM WEB WELDED CONNECTION. DESIGN THE C-SHAPED "WELD A" FOR THE COMBINED EFFECTS OF SHEAR "R", TENSION "H", AND MOMENT "M = R x E", WHERE "E" IS THE DISTANCE FROM THE END OF THE ANGLE ON THE COLUMN SIDE TO THE CENTROID OF THE C-SHAPED WELD.

      3) "DOUBLE ANGLES A". DESIGN DOUBLE ANGLES FOR SHEAR "R" AND TENSION "H". THE ANGLE LEG THICKNESS SHALL BE ADEQUATE FOR BENDING CAUSED BY PRYING ACTION.

      4) COLUMN FLANGE BENDING. FOR CASES WHERE THE BRACE BEAM FRAMES TO THE COLUMN FLANGE, THE COLUMN FLANGE THICKNESS SHALL BE CHECKED FOR BENDING STRESSES RESULTING FROM PRYING ACTION DUE TO TENSION FORCE "H". REDUCE THE BOLT GAGE, INCREASE BOLT SPACING OR NUMBER OF BOLTS, OR PROVIDE COLUMN FLANGE STIFFENERS IF REQUIRED TO CORRECT COLUMN FLANGE BENDING PROBLEMS.

      5) BEAM WEB. CHECK BEAM WEB FOR COMBINED SHEAR "R" AND TENSION "H". INCREASE ANGLE LENGTH, ANGLE LEG, AND/OR PROVIDE DOUBLER PLATES IN BEAM WEB IF REQUIRED TO CORRECT BEAM WEB STRENGTH DEFICIENCIES.

   b. GUSSET PLATE TO COLUMN CONNECTION

      1) "DOUBLE ANGLE B" TO COLUMN BOLTED CONNECTION

         a) FOR GUSSET PLATE TO COLUMN WEB CONNECTIONS AND GUSSET PLATE TO COLUMN FLANGE CONNECTIONS WHERE THE BRACE WORK POINT IS LOCATED AT THE COLUMN FACE, BOLTS SHALL BE DESIGNED FOR SHEAR "Pv" WITHOUT REGARD TO ECCENTRICITY. "DOUBLE ANGLES B" SHALL BE CHECKED FOR SHEAR IN GROSS AND NET SECTION.

         b) FOR GUSSET PLATE TO COLUMN FLANGE CONNECTIONS WHERE THE BRACE WORK POINT IS LOCATED AT THE COLUMN CENTERLINE, BOLTS SHALL BE DESIGNED FOR COMBINED SHEAR "Pv" AND TENSION DUE TO MOMENT "M = Pv x E3" WHERE E3 IS EQUAL TO ONE HALF THE COLUMN DEPTH. THE MAGNITUDE OF THE DESIGN BOLT TENSION SHALL CONSIDER THE MAGNIFICATION EFFECT OF PRYING ACTION. "DOUBLE ANGLES B" SHALL BE CHECKED FOR SHEAR IN GROSS AND NET SECTION AS WELL AS MOMENT "M = Pv x (E3 + 1)". ADDITIONALLY, THE ANGLE LEG THICKNESS SHALL BE CHECKED FOR BENDING STRESSES RESULTING FROM PRYING ACTION.

      2) "DOUBLE ANGLE B" TO GUSSET PLATE WELDED CONNECTION. DESIGN THE C-SHAPED "WELD B" FOR THE COMBINED EFFECTS OF SHEAR "Pv" AND MOMENT "M = Pv x E4". THE ECCENTRICITY "E4" IS EQUAL TO THE HORIZONTAL DISTANCE FROM THE WORK POINT TO THE CENTROID OF THE C-SHAPED WELD.

      3) COLUMN FLANGE BENDING. FOR CASES WHERE THE GUSSET PLATE CONNECTS TO THE COLUMN FLANGE AND THE BRACE WORK POINT IS AT THE CENTERLINE OF THE COLUMN, THE COLUMN FLANGE THICKNESS SHALL BE CHECKED FOR BENDING STRESSES RESULTING FROM PRYING ACTION DUE TO MOMENT "M = Pv x E3". REDUCE THE BOLT GAGE, INCREASE BOLT SPACING OR NUMBER OF BOLTS, OR PROVIDE FLANGE STIFFENERS IF REQUIRED TO CORRECT COLUMN FLANGE BENDING PROBLEMS.

   c. GUSSET PLATE TO BEAM FLANGE CONNECTION

      1) GUSSET PLATE TO BEAM FLANGE WELDED CONNECTION. DESIGN "WELD C" FOR THE COMBINED EFFECTS OF SHEAR "Ph" AND MOMENT "M = Ph x E1" WHERE "E1" IS EQUAL TO ONE HALF THE BEAM DEPTH.

      2) BEAM WEB

         a) CHECK BEAM WEB FOR HORIZONTAL SHEAR AT A SECTION LOCATED JUST PAST THE BEAM FLANGE AND HAVING A LENGTH EQUAL TO THE HORIZONTAL DIMENSION OF THE GUSSET PLATE. THE BEAM WEB HORIZONTAL SHEAR SHALL BE EQUAL TO "Ph x (1-AF/A)" WHERE "AF" IS THE AREA OF ONE BEAM FLANGE AND "A" IS THE TOTAL BEAM CROSS SECTIONAL AREA. INCREASE GUSSET PLATE HORIZONTAL DIMENSION OR PROVIDE DOUBLER PLATES AS REQUIRED TO CORRECT BEAM HORIZONTAL SHEAR PROBLEMS.

         b) CHECK BEAM WEB FOR WEB CRIPPLING AT THE END OF THE GUSSET PLATE. INCREASE GUSSET PLATE HORIZONTAL DIMENSION AND/OR PROVIDE DOUBLER PLATES OR STIFFENER PLATES AS REQUIRED TO CORRECT BEAM WEB CRIPPLING PROBLEMS.

   d. GUSSET PLATE AT BRACE/BEAM/COLUMN CONNECTION

      1) AT THE CONNECTION TO THE COLUMN, CHECK THE GUSSET PLATE FOR VERTICAL SHEAR "Pv". FOR CASES WHERE THE GUSSET PLATE CONNECTS TO THE COLUMN FLANGE AND THE BRACE WORK POINT IS LOCATED AT THE COLUMN CENTERLINE, ADDITIONALLY CHECK THE GUSSET PLATE FOR MOMENT "M = Pv x E4".

      2) AT THE BEAM CONNECTION, CHECK THE GUSSET PLATE FOR HORIZONTAL SHEAR "Ph" AND MOMENT "M = Ph x E1".

      3) THE GUSSET PLATE THICKNESS SHALL ADDITIONALLY BE CHECKED FOR BOLT BEARING WHERE APPLICABLE, TEAR OUT, AND YIELDING AND/OR BUCKLING AT THE WHITMORE SECTION.

   e. "V" OR "K" BRACE CONNECTION TO BEAM BETWEEN COLUMNS

      THESE NOTES APPLY TO CONDITIONS IN WHICH TWO BRACES OF THE "CHEVRON" OR "K" TYPE OR OF THE INVERTED "V" TYPE CONNECT TO THE BRACE BEAM SOMEWHERE IN THE BEAM SPAN AWAY FROM THE COLUMNS.

      1) GUSSET PLATE TO BEAM FLANGE WELDED CONNECTION. DESIGN "WELD C" FOR THE COMBINED EFFECTS OF SHEAR "Ph1 + Ph2" AND MOMENT "M = (Ph1 + Ph2) x E1".

      2) GUSSET PLATE

         a) DESIGN THE GUSSET PLATE FOR THE COMBINED EFFECTS OF HORIZONTAL SHEAR "Ph1 + Ph2" AND MOMENT "M = (Ph1 + Ph2) x E1". THE HORIZONTAL SHEAR AND MOMENT SHALL BE RESISTED OVER THE GUSSET PLATE LENGTH "L".

         b) DESIGN THE GUSSET PLATE TO DEVELOP THE CONNECTION VERTICAL SHEAR WHICH SHALL BE TAKEN AS THE LARGER OF "Pv1" AND "Pv2". THE VERTICAL SHEAR SHALL BE RESISTED OVER THE GUSSET PLATE DEPTH "D".

         c) THE GUSSET PLATE THICKNESS SHALL ADDITIONALLY BE CHECKED FOR BOLT BEARING WHERE APPLICABLE, TEAR OUT, AND YIELDING AND/OR BUCKLING AT THE WHITMORE SECTION.

      3) BEAM WEB

         a) CHECK BEAM WEB FOR HORIZONTAL SHEAR AT A SECTION LOCATED JUST PAST THE BEAM FLANGE AND HAVING A LENGTH EQUAL TO THE HORIZONTAL DIMENSION OF THE GUSSET PLATE "L". THE BEAM WEB HORIZONTAL SHEAR SHALL BE EQUAL TO "(Ph1 + Ph2) x (1 - AF/A)" WHERE "AF" IS THE AREA OF ONE BEAM FLANGE AND "A" IS THE TOTAL BEAM CROSS SECTIONAL AREA. INCREASE GUSSET PLATE HORIZONTAL DIMENSION OR PROVIDE DOUBLER PLATES AS REQUIRED TO CORRECT BEAM HORIZONTAL SHEAR PROBLEM.

         b) CHECK BEAM WEB FOR WEB CRIPPLING AT THE END OF THE GUSSET PLATE. INCREASE GUSSET PLATE HORIZONTAL DIMENSION AND/OR PROVIDE DOUBLER PLATES OR STIFFENER PLATES AS REQUIRED TO CORRECT BEAM WEB CRIPPLING PROBLEMS.

   f. BRACE MEMBER CONNECTION TO GUSSET PLATE

      1) PROVIDE WELDED OR BOLTED CONNECTIONS AS INDICATED ON THE DETAILS ON THE DRAWINGS TO DEVELOP BRACE FORCE.

      2) FOR BOLTED CONNECTIONS REMOVING MORE THAN 15% OF THE BRACE MEMBER SECTION, CHECK BRACE STRENGTH IN THE NET SECTION AND REINFORCE AS REQUIRED. REFER TO NOTE 3 ABOVE.

7 TYPICAL BRACED FRAME NOTES

NO SCALE

HOUSTON AIRPORT SYSTEM

APPROVED

HOUSTON AIRPORT SYSTEM DIRECTOR OR DESIGNATED PDC REPRESENTATIVE — DATE

JACOBS
5985 Rogerdale Road
Houston, Texas
77072

P 832.351.6000
F 281.776.2501
W www.jacobs.com

TBPE Firm #2966

HENDERSON ROGERS
structural engineers
2603 Augusta, Suite 800
Houston, Texas 77057
713.430.5800 713.430.5888 fax
www.henderson-rogers.com

Seals:

INTERIM REVIEW ONLY
These documents are incomplete, and are released for interim review only and are not intended for regulatory approval, permit, or construction purposes.
Engineer: K. ELAINE ROGERS
Eng. Reg. No.: 65566
TBPE Firm Reg No: 2194
Date: 08/04/2015

Project Client:
Houston Airport System
Project Address

Project Managers Office

George Bush Intercontinental Airport (IAH)

115 Standifer St.
Humble, TX 77338

Number	Description	Date
	100% Bridging Documents	04 Aug 2015

Key Plan — Project North

0 60 120 180
GRAPHIC SCALE: As Noted on Drawings

Project No.:

Copyright: 2015 Jacobs Engineering

TDLR #:

Drawing Sheet Title:

BRACING TYPICAL DETAILS

Drawing Sheet Number:

S-500

Owner's Drawing Sheet No.:

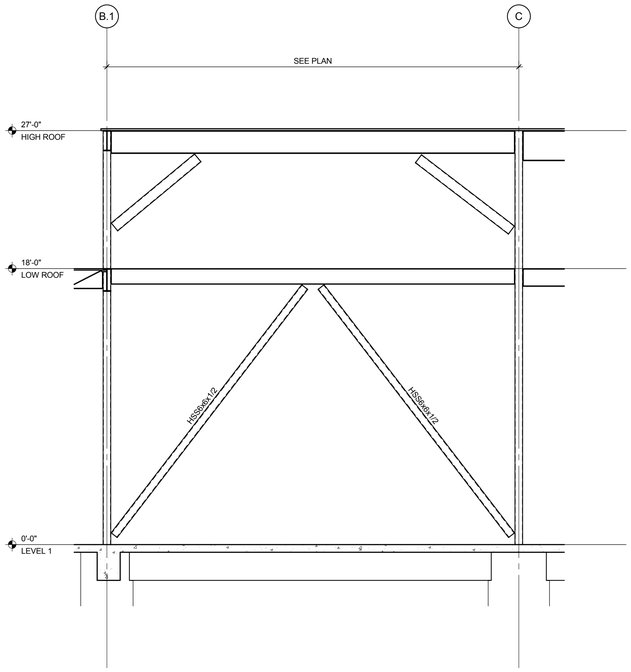

3 ELEVATION ALONG GRID 3

1/4" = 1'-0"

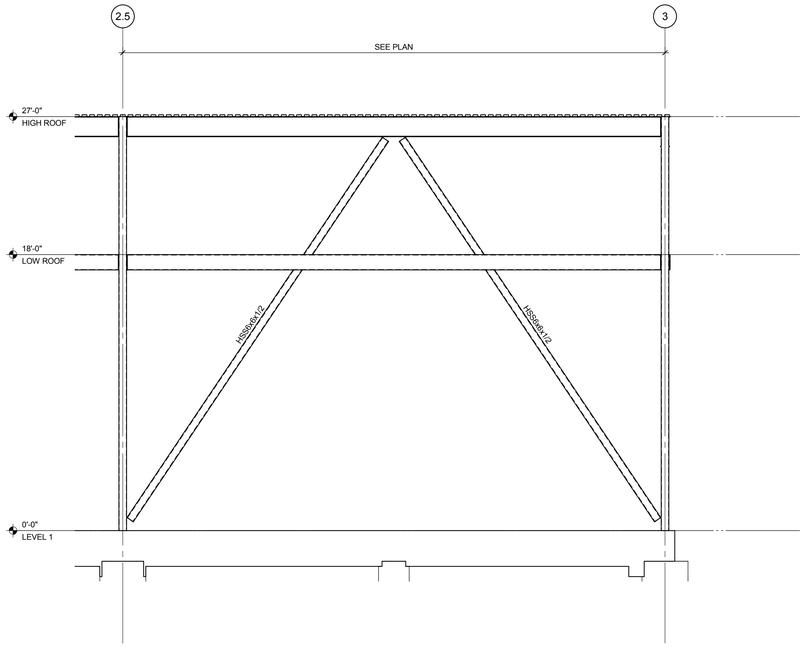

2 ELEVATION ALONG GRID E

1/4" = 1'-0"

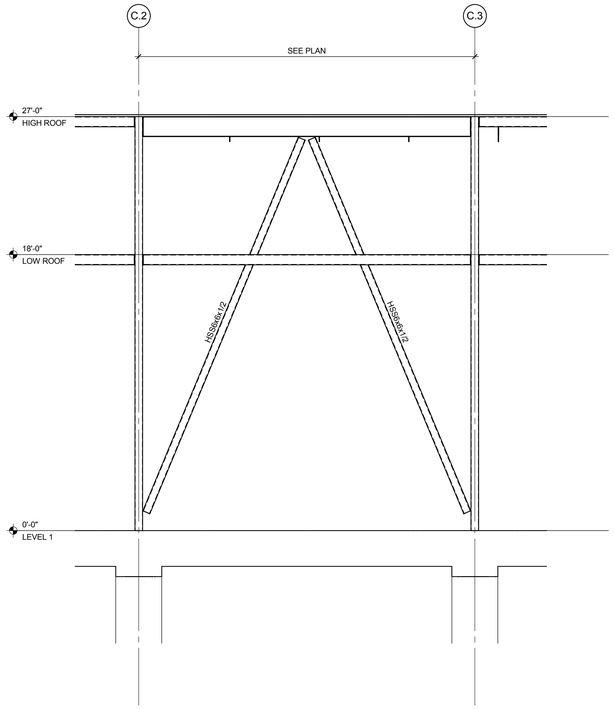

1 ELEVATION ALONG GRID 1

1/4" = 1'-0"

HOUSTON AIRPORT SYSTEM

APPROVED

HOUSTON AIRPORT SYSTEM
DIRECTOR OR DESIGNATED PDC REPRESENTATIVE

DATE

JACOBS

5985 Rogerdale Road
Houston, Texas
77072

P 832.351.6000
F 281.776.2501
W www.jacobs.com

TBPE Firm #2966

HENDERSON ROGERS
structural engineers
2603 Augusta, Suite 800
Houston, Texas 77057
713.430.5800 713.430.5888 fax
www.henderson-rogers.com

Seals:

INTERIM REVIEW ONLY

These documents are incomplete, and are released for interim review only and are not intended for regulatory approval, permit, or construction purposes.

Engineer: K. ELAINE ROGERS
Eng. Reg. No.: 65566
TBPE Firm Reg No: 2194
Date: 08/04/2015

Project Client:
Houston Airport System
Project Address

Project Managers Office

George Bush
Intercontinental Airport (IAH)

115 Standifer St.
Humble, TX 77338

Number	Description	Date
	100% Bridging Documents	04 Aug 2015

Key Plan

Project North

0 60 120 180
GRAPHIC SCALE: As Noted on Drawings

Project No.:

Copyright: 2015 Jacobs Engineering

TDLR #:

Drawing Sheet Title:

BRACE
ELEVATIONS

Drawing Sheet Number:

S-501

Owner's Drawing Sheet No.:

BEARING CHANNEL SCHEDULE

PNL SIZE	CHANNEL SIZE	PNL SIZE	CHANNEL SIZE
5 1/2"	C6x8.2	8"	C8x11.5
6 1/4"	C6x8.2	8 1/2"	C8x11.5
6 1/2"	C6x8.2	8 3/4"	C9x13.4
6 3/4"	C6x8.2	9 1/4"	C9x13.4
7 1/4"	C7x9.8	10"	C10x15.3
7 1/2"	C7x9.8	11 1/4"	C12x20.7
7 3/4"	C8x11.5	12 3/4"	C12x20.7

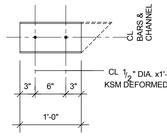

NOTES TO CONTRACTOR:

1. PROVIDE 3" (MIN) CONCRETE COVER OVER ALL EXPOSED STEEL.
2. CHANNEL FLANGE TO BE FLUSH WITH EXTERIOR FACE OF PANEL.
3. NO SHIMS ALLOWED WITHOUT PRIOR APPROVAL OF STRUCTURAL ENGINEER.

5 DETAIL
NTS

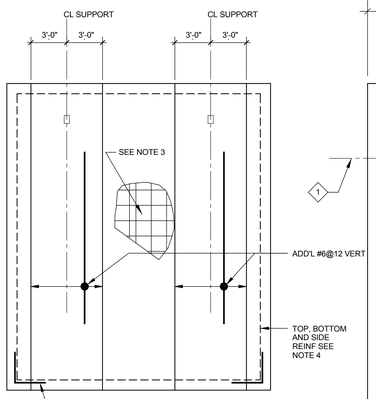

NOTE:
1. SEE DETAILS AND SITE CAST TILT-UP CONCRETE WALL PANEL NOTES FOR OTHER REINFORCING AND PLATE LOCATIONS.

TYPICAL REINFORCING PLACEMENT FOR TYPICAL TILT-UP SPANDREL PANEL

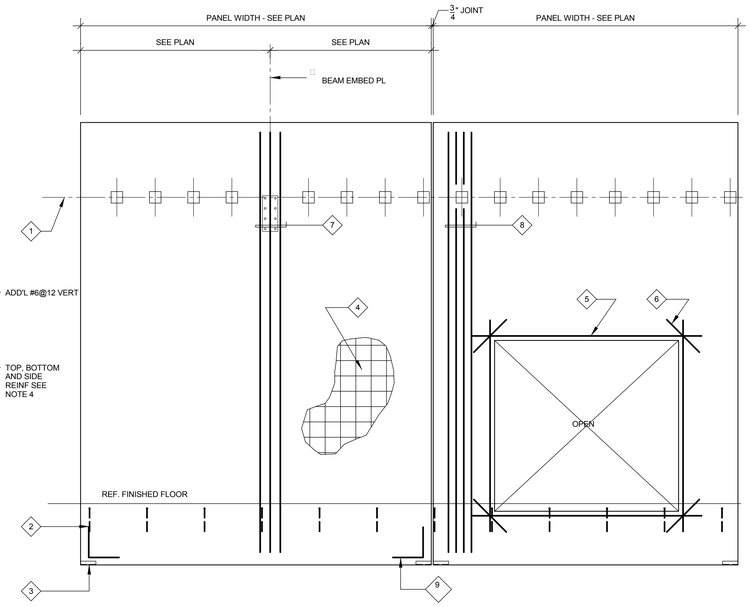

TYPICAL PANEL REINFORCEMENT PLACEMENT

1. SEE PANEL ELEVATIONS FOR PLATE SIZES AND LOCATIONS.
2. #4 DOWELS TO SLAB (SEE FOUNDATION DETAILS)
3. BEARING CHANNEL (SEE PANEL DETAILS)
4. PANEL MAT REINFORCEMENT SHALL BE AS FOLLOWS:

PANEL STRUCTURAL THICKNESS	REINFORCEMENT
5 1/2" TO 6 3/4" INCLUSIVE	#4 AT 12" O.C. VERTICAL #4 AT 15" O.C. HORIZONTAL
7" TO 8 1/4" INCLUSIVE	#4 AT 12" O.C. VERTICAL #4 AT 12" O.C. HORIZONTAL
8 1/2" TO 11 1/4" INCLUSIVE (TWO MATS)	#4 AT 10" O.C. VERTICAL #4 AT 15" O.C. HORIZONTAL

THE CENTERLINE OF THE VERTICAL BARS SHALL COINCIDE WITH THE CENTERLINE OF THE STRUCTURAL THICKNESS OF THE PANEL FOR SINGLE-LAYER MATS. PANELS WITH TWO LAYERS OF MAT STEEL SHALL HAVE A MAT 1 1/2" CLEAR OF EACH FACE. SEE PANEL ELEVATIONS FOR ADDITIONAL REINFORCEMENT REQUIREMENTS.

5. PROVIDE (1) - #5 (FOR EACH MAT OF STEEL) CONTINUOUS AT THE TOP, BOTTOM AND SIDES OF EACH PANEL, AT THE HEAD, JAMBS AND SILL OF EACH OPENING AND EACH FUTURE KNOCK-OUT OPENING IN THE PANEL. PROVIDE (2) - #5 (1 NS & 1 FS) THAT EXTEND AT LEAST 24 INCHES BEYOND THE LIMITS OF THE OPENING.
6. PROVIDE (1) - #5 X 4'-0" (FOR EACH MAT OF STEEL), PLACED DIAGONALLY AT THE CORNER OF EACH OPENING, FUTURE KNOCK-OUT OPENING AND AT THE CORNER OF NOTCHES IN THE PANEL.
7. UNLESS OTHERWISE NOTED ON THE PANEL DETAILS, PROVIDE (3)-#6 VERTICAL BARS FULL HEIGHT AT THE BEAM/JOIST GIRDER LOCATIONS ONE AND ONE-HALF (1 1/2 ") INCHES CLEAR OF EXTERIOR PANEL FACE.
8. ALL PANEL LEGS LESS THAN 3'-0" WIDE (THAT ARE REMAINING AROUND SIDES OF OPENINGS) ARE TO BE REINFORCED WITH (5)-#6 VERTICAL BARS FULL HEIGHT UNLESS OTHER PANEL LEG REINFORCING IS SHOWN ON THE PANEL DETAIL. THESE VERTICAL BARS ARE TO BE TIED TO THE MAT STEEL TOWARD THE EXTERIOR FACE OF THE WALL PANEL.
9. PROVIDE (1) - #5 x 4'-0" (FOR EACH MAT OF STEEL), WITH A 90 DEGREE BEND AT THE MIDPOINT, AT EACH BOTTOM CORNER OR EACH SPANDREL PANEL AND EACH FULL HEIGHT PANEL MORE THAN 15'-0" WIDE.

4 DETAIL
NTS

SITE CAST TILT-UP CONCRETE WALL PANEL NOTES:

1. UNLESS NOTED OTHERWISE, PANELS SHOWN ON DRAWINGS ARE TO BE CAST ON SITE, TILT-UP CONCRETE WALL PANELS.
2. SEE GENERAL NOTES SECTIONS: "CONCRETE" AND "STRUCTURAL STEEL" FOR SPECIFICATIONS ON CONCRETE, REINFORCEMENT BARS, AND EMBEDDED PLATES. UNLESS NOTED OTHERWISE, PANEL REINFORCEMENT SHOWN ON PANEL ELEVATIONS IS ADDITIONAL TO THAT CALLED FOR IN THE NOTES.
3. THE GENERAL CONTRACTOR SHALL REVIEW AND VERIFY ALL PANEL DIMENSIONS, OPENINGS, BEAM AND WELD PLATE LOCATIONS, AND REPORT ANY DISCREPANCIES TO THE STRUCTURAL ENGINEER PRIOR TO CASTING PANELS.
4. THE PANELS ARE DRAWN VIEWED FROM THE INTERIOR, UNLESS NOTED OTHERWISE, AND SHALL BE CAST WITH THE EXTERIOR FACE DOWN.
5. EXPOSED EDGES OF PANELS SHALL BE CHAMFERED, EXCEPT AT THE INSIDE FACE OF OVERHEAD DOORS. SEE ARCHITECTURAL DRAWINGS FOR PANEL FINISHES, REVEALS, CHAMFERS, ETC.
6. THE PANELS HAVE BEEN DESIGNED FOR THE IN-SERVICE CONDITIONS ONLY. ADDITIONAL REINFORCEMENT, STRONG-BACKS, ETC. MAY BE REQUIREDFOR LIFTING. THE GENERAL CONTRACTOR SHALL BE RESPONSIBLE FOR THE PANEL LIFTING DESIGN AND METHOD. CONTRACTOR SHALL DISTRIBUTE CRANE LOADS TO THE SLAB ON GRADE IN SUCH A MANNER SO AS NOTTO CRACK THE SLAB.
7. LIFTING INSERTS VISIBLE AFTER FINAL CONSTRUCTION SHALL BE PATCHED AND FINISHED TO MEET THE ARCHITECT'S APPROVAL.
8. TEMPORARY BRACING OF PANELS SHALL NOT BE REMOVED UNTIL AFTER THE SLAB LEAVE OUT HAS BEEN POURED AND THE ROOF CONSTRUCTION HAS BEEN COMPLETED.
9. PROPOSED EMBEDDED CONDUIT PLACEMENT IN TILT-UP PANELS SHALL BE SUBMITTED TO THE STRUCTURAL ENGINEER FOR REVIEW.
10. (N.S.) INDICATES NEAR SIDE OF PANEL. (F.S.) INDICATES FAR SIDE OF PANEL.

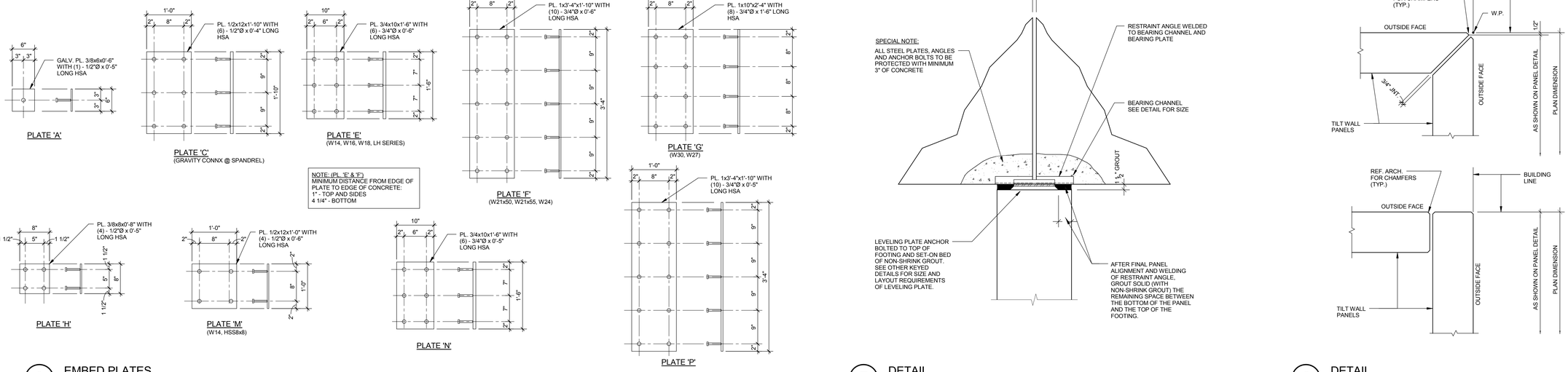

9 EMBED PLATES
NTS

7 DETAIL
NTS

6 DETAIL
NTS

PANEL THICKNESS	BEARING PLATE
5 1/2" - 7 1/4"	1/2" x 13" x 1'-1"
7 1/2" - 8 1/2"	1/2" x 13" x 1'-2"
8 3/4" - 11 1/4"	1/2" x 13" x 1'-3"

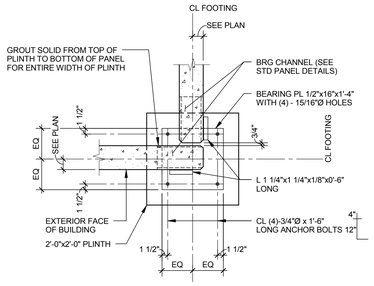

15 DETAIL
3/4" = 1'-0"

PANEL THICKNESS	BEARING PLATE
5 1/2" - 7 1/4"	1/2" x 13" x 1'-1"
7 1/2" - 8 1/2"	1/2" x 13" x 1'-2"
8 3/4" - 11 1/4"	1/2" x 13" x 1'-3"

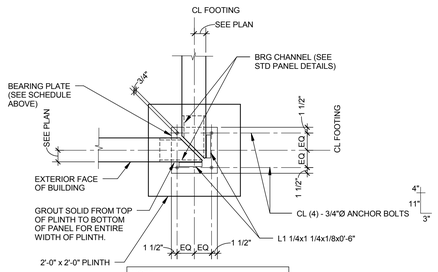

14 DETAIL
3/4" = 1'-0"

PANEL THICKNESS	BEARING PLATE
5 1/2" - 7 1/4"	1/2" x 13" x 1'-1"
7 1/2" - 8 1/2"	1/2" x 13" x 1'-2"
8 3/4" - 11 1/4"	1/2" x 13" x 1'-3"

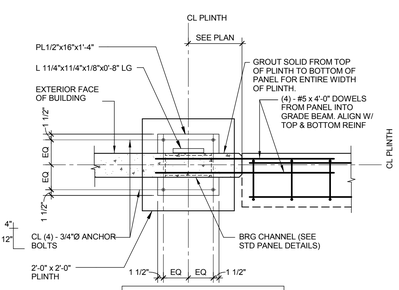

13 DETAIL
3/4" = 1'-0"

PANEL THICKNESS	BEARING PLATE
5 1/2" - 7 1/4"	1/2" x 13" x 1'-1"
7 1/2" - 8 1/2"	1/2" x 13" x 1'-2"
8 3/4" - 11 1/4"	1/2" x 13" x 1'-3"

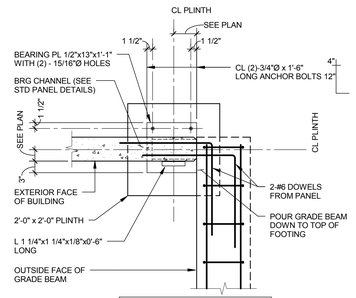

12 DETAIL
3/4" = 1'-0"

PANEL THICKNESS	BEARING PLATE
5 1/2" - 7 1/4"	1/2" x 13" x 1'-1"
7 1/2" - 8 1/2"	1/2" x 13" x 1'-2"
8 3/4" - 11 1/4"	1/2" x 13" x 1'-3"

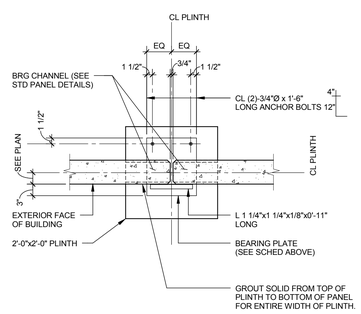

11 DETAIL
3/4" = 1'-0"

HOUSTON AIRPORT SYSTEM

APPROVED

HOUSTON AIRPORT SYSTEM DIRECTOR OR DESIGNATED PDC REPRESENTATIVE — DATE

JACOBS
5985 Rogerdale Road
Houston, Texas
77072

P 832.351.6000
F 281.776.2501
W www.jacobs.com

TBPE Firm #2966

HENDERSON ROGERS
structural engineers
2603 Augusta, Suite 800
Houston, Texas 77057
713.430.5800 713.430.5888 fax
www.henderson-rogers.com

Seals:

INTERIM REVIEW ONLY
These documents are incomplete, and are released for interim review only and are not intended for regulatory approval, permit, or construction purposes.
Engineer: K. ELAINE ROGERS
Eng. Reg. No.: 65566
TBPE Firm Reg No: 2194
Date: 08/04/2015

Project Client:
Houston Airport System
Project Address

Project Managers Office

George Bush Intercontinental Airport (IAH)

115 Standifer St.
Humble, TX 77338

Number	Description	Date
	100% Bridging Documents	04 Aug 2015

Key Plan — Project North

GRAPHIC SCALE: As Noted on Drawings

Project No.:

Copyright: 2015 Jacobs Engineering

TDLR #:

Drawing Sheet Title:

TYPICAL PANEL DETAILS

Drawing Sheet Number:

S-600

Owner's Drawing Sheet No.:

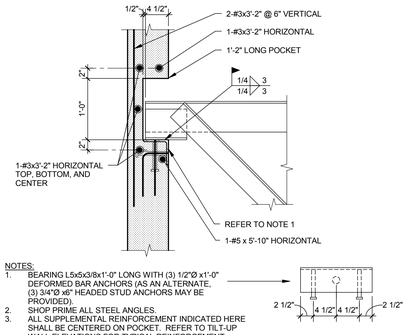

NOTES:
1. BEARING L5x5x3/8x1'-0" LONG WITH (3) 1/2"Ø x1'-0" DEFORMED BAR ANCHORS (AS AN ALTERNATE, (3) 3/4"Ø x6" HEADED STUD ANCHORS MAY BE PROVIDED).
2. SHOP PRIME ALL STEEL ANGLES.
3. ALL SUPPLEMENTAL REINFORCEMENT INDICATED HERE SHALL BE CENTERED ON POCKET. REFER TO TILT-UP WALL ELEVATIONS FOR TYPICAL REINFORCEMENT (NOT SHOWN).

4 TYPICAL CONCRETE TILT-UP WALL PANEL STEEL JOIST GIRDER POCKET BEARING

NO SCALE

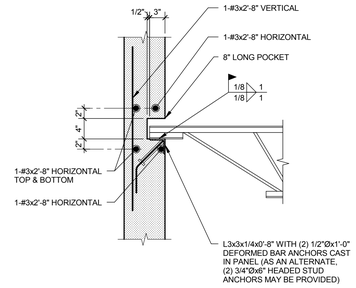

NOTES:
1. SHOP PRIME ALL STEEL ANGLES.
2. ALL SUPPLEMENTAL REINFORCEMENT INDICATED HERE SHALL BE CENTERED ON POCKET. REFER TO TILT-UP WALL ELEVATIONS FOR TYPICAL REINFORCEMENT (NOT SHOWN).

3 TYPICAL CONCRETE TILT-UP WALL PANEL STEEL JOIST POCKET BEARING

NO SCALE

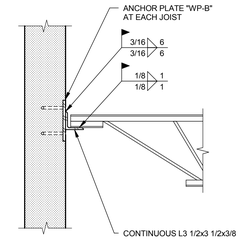

NOTES:
1. SHOP PRIME ALL STEEL ANGLES AND PLATES.

2 TYPICAL CONCRETE TILT-UP WALL PANEL STEEL JOIST ANGLE BEARING

NO SCALE

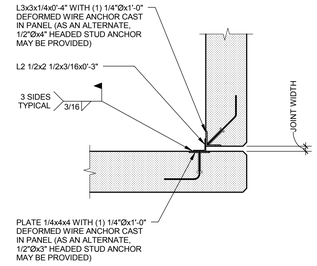

NOTES:
1. PROVIDE LATERAL CONNECTION BETWEEN ALL CORNER PANELS AS SHOWN AT 2'-0" BELOW TOP OF STEEL AT EACH LEVEL.
2. SHOP PRIME ALL STEEL ANGLES AND PLATES.

1 TYPICAL CONCRETE TILT-UP WALL PANEL CONNECTION AT CORNER

NO SCALE

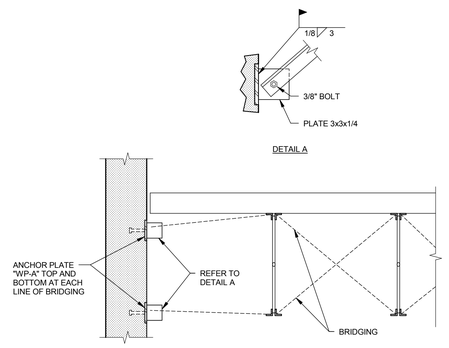

8 TYPCIAL STEEL JOIST DIAGONAL BRIDGING TO TILT-UP WALL PANEL

NO SCALE

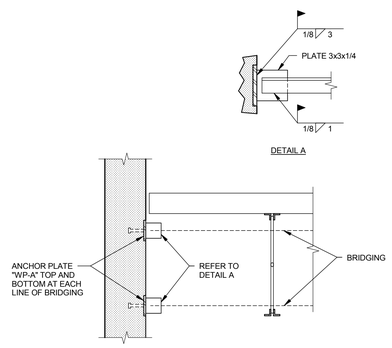

7 TYPICAL STEEL JOIST PARALLEL BRIDGING TO TILT-UP WALL PANEL

NO SCALE

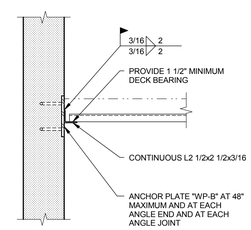

NOTES:
1. SHOP PRIME ALL STEEL ANGLES AND PLATES.

6 TYPICAL CONCRETE TILT-UP WALL PANEL STEEL DECK BEARING AT ROOF

NO SCALE

HOUSTON AIRPORT SYSTEM

APPROVED

HOUSTON AIRPORT SYSTEM
DIRECTOR OR DESIGNATED PDC REPRESENTATIVE
DATE

JACOBS
5985 Rogerdale Road
Houston, Texas
77072

P 832.351.6000
F 281.776.2501
W www.jacobs.com

TBPE Firm #2966

HENDERSON ROGERS
structural engineers
2603 Augusta, Suite 800
Houston, Texas 77057
713.430.5800 713.430.5888 fax
www.henderson-rogers.com

Seals:

INTERIM REVIEW ONLY

These documents are incomplete, and are released for interim review only and are not intended for regulatory approval, permit, or construction purposes.

Engineer: K. ELAINE ROGERS
Eng. Reg. No.: 65566
TBPE Firm Reg No: 2194
Date: 08/04/2015

Project Client:
Houston Airport System
Project Address

Project Managers Office

George Bush Intercontinental Airport (IAH)

115 Standifer St.
Humble, TX 77338

Number	Description	Date
	100% Bridging Documents	04 Aug 2015

Key Plan

Project North

0 60 120 180
GRAPHIC SCALE: As Noted on Drawings

Project No.:

Copyright: 2015 Jacobs Engineering

TDLR #:

Drawing Sheet Title:

TYPICAL PANEL DETAILS

Drawing Sheet Number:

S-601

Owner's Drawing Sheet No.:

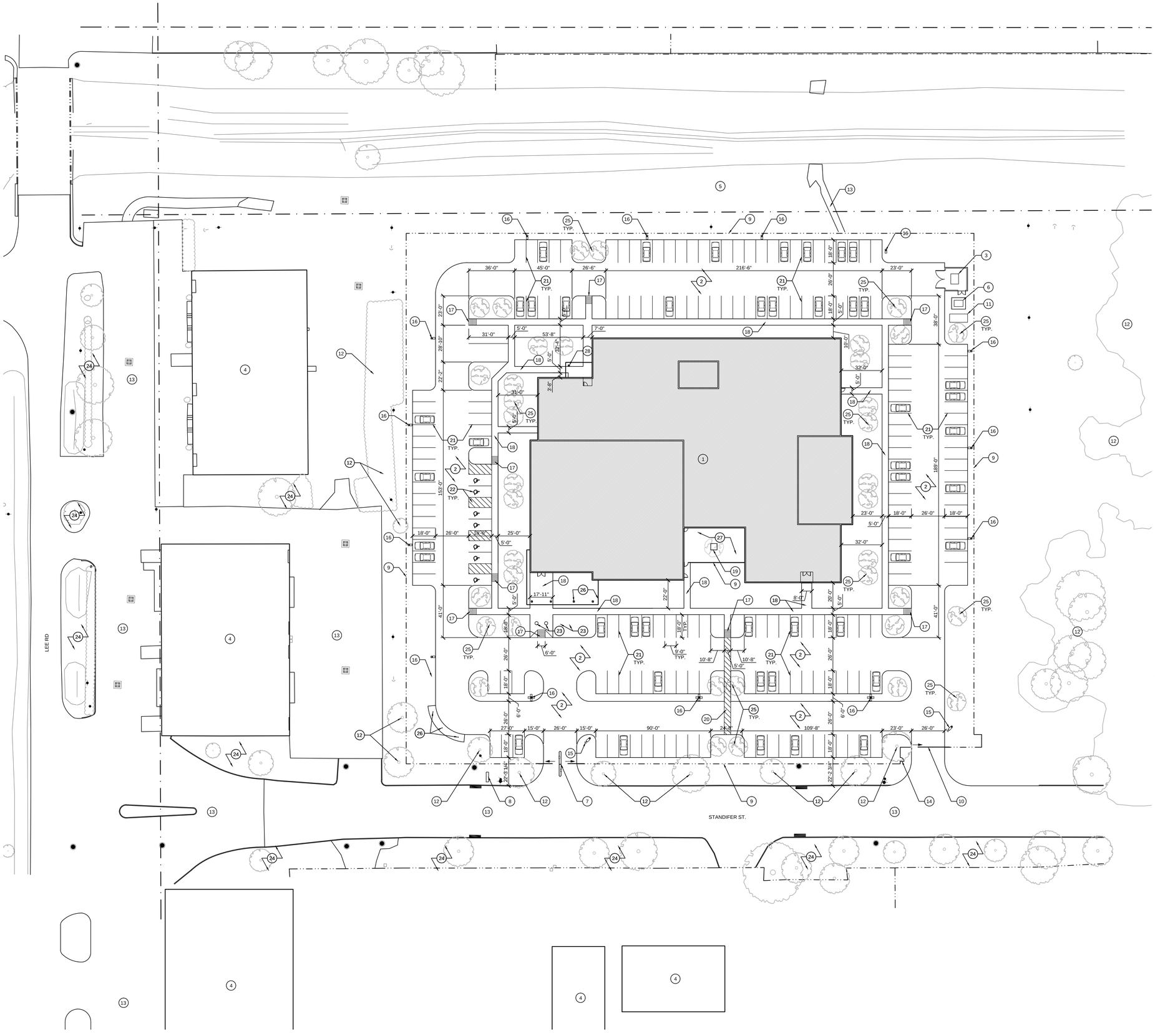

ARCHITECTURAL SITE PLAN — 1" = 30'-0" (7)

1. NEW 42,960 S.F. PROGRAM MANAGEMENT OFFICE
2. PARKING LOT PAVING, RE: CIVIL
3. DUMPSTER LOCATION
4. EXISTING BUILDING, NOT IN SCOPE
5. 30' MAINTENANCE BERM
6. NEW PAD MOUNT TRANSFORMER, RE: ELECTRICAL
7. SLIDING ELECTRICAL GATE, CALL BOXES, AND CARD READERS
8. MONUMENT SIGN
9. NEW 7'-0" TALL FENCE
10. SLIDING GATE (MANUAL)
11. GENERATOR
12. EXISTING TREES & VEGETATION TO REMAIN
13. EXISTING PAVEMENT, NOT IN SCOPE
14. 3'-0" WIDE MAN GATE IN NEW FENCE
15. NEW SECURITY CAMERA ON 15' TALL POLE
16. NEW SITE LIGHTING FIXTURE ON 30' TALL POLE WITH 18" DIA. X 36" TALL CONCRETE BASE, RE: CIVIL
17. ADA ACCESSIBLE CURB RAMP, RE: CIVIL
18. CONCRETE SIDEWALK, RE: CIVIL,TO BE 5'-0" WIDE UNLESS NOTED OTHERWISE
19. PLANTER BOX AND LANDSCAPING
20. CROSSWALK STRIPING, RE: CIVIL
21. 4" WIDE PARKING STALL STRIPING, TYP., RE: CIVIL
22. 9'-0" X 18'-0" ACCESSIBLE PARKING STALL STRIPING, TYP., RE: CIVIL
23. 30" DIA. SPHERICAL BOLLARDS, RE: CIVIL
24. EXISTING LANDSCAPING AND VEGETATION, NOT IN SCOPE
25. NEW LANDSCAPING, TYP.
26. 25 FT. TALL ANODIZED FLAGPOLE, TYP. OF 3
27. 3" X 18" CONCRETE PAVERS AT COURTYARD.
28. PREFINISHED ALUM. ENTRY CANOPY AND COLUMNS.

SHEET KEYNOTES — NO SCALE (3)

1. REFER TO CIVIL DRAWINGS FOR ADDITIONAL SITEWORK SCOPE AND DETAILS.
2. COORDINATE SITEWORK WITH BUILDING PAD.
3. CONTRACTOR SHALL BE RESPONSIBLE FOR VERIFYING ACCURACY OF INFORMATION AND REPORTING ANY DISCREPANCY THAT MIGHT AFFECT CONSTRUCTION OF THE INTENDED IMPROVEMENTS PRIOR TO BEGINNING CONSTRUCTION. SURVEYS MAY NOT ACCOUNT FOR ALL BELOW GRADE CONDITIONS. PRIOR TO UNDERTAKING ANY EXCAVATION, CONTRACTOR SHALL CONFIRM LOCATIONS OF ALL UNDERGROUND UTILITIES WITH LOCAL PROVIDER AND/OR OWNER.
4. ALL DIMENSIONS ARE FROM BACK OF CURB OR FACE OF BUILDING, UNLESS NOTED OTHERWISE. CONTRACTOR SHALL BRING ANY DIMENSIONAL DISCREPENCIES TO THE ATTENTION OF THE ARCHITECT.
5. REFER TO CIVIL DRAWINGS FOR OVERALL SITE DIMENSIONAL CONTROL AND MASS GRADING.
6. REFER TO CIVIL DRAWINGS FOR ALL PAVEMENT LAYOUTS AND MARKINGS.
7. UNLESS SPECIFICALLY DEPICTED HEREIN, REFER TO STRUCTURAL DRAWINGS FOR ALL CONCRETE REINFORCING.
8. THE RUNNING SLOPE OF WALKING SURFACES SHALL NOT EXCEED 1:20. THE CROSS SLOPE OF WALKING SURFACES SHALL NOT EXCEED 1:48.
9. THE SLOPE OF ACCESSIBLE PARKING SPACES AND AISLES SHALL NOT EXCEED 1:48 IN ANY DIRECTION
10. THE RUNNING SLOPE OF ALL CURB RAMPS SHALL NOT EXCEED 1:12. THE SLOPE OF FLARED SIDES SHALL NOT EXCEED 1:10.
11. TYPICAL PARKING SPACES ARE 9'-0" WIDE BY 18'-0" LONG. ACCESSIBLE PARKING SPACES ARE 9'-0" WIDE BY 18'-0" LONG WITH A MINIMUM 8'-0" WIDE ACCESS AISLE OF EQUAL LENGTH.

GENERAL NOTES — NO SCALE (1)

HOUSTON AIRPORT SYSTEM

APPROVED

HOUSTON AIRPORT SYSTEM
DIRECTOR OR DESIGNATED
PDC REPRESENTATIVE

DATE

JACOBS

5985 Rogerdale Road
Houston, Texas
77072

P 832.351.6000
F 281.776.2501
W www.jacobs.com

TBPE Firm #2966

Seals:

THESE DOCUMENTS ARE FOR INTERIM REVIEW AND NOT FOR CONSTRUCTION, BIDDING OR PERMIT PURPOSES.

RESPONSIBLE ARCHITECT
CHRISTOPHER M. CASEY
24309
8-4-15

Project Client:
Houston Airport System
Project Address

Program Management Office

George Bush
Intercontinental Airport (IAH)

115 Standifer St.
Humble, TX 77338

Number	Description	Date
	95% REVIEW OF BRIDGING DOCUMENTS	21 MAY 2015
	100% BRIDGING DOCUMENTS	4 AUG 2015

Key Plan

Project North

0 30 60 90
GRAPHIC SCALE: 1" = 30'

Project No.:

Copyright: 2015 Jacobs Engineering

TDLR #:

Drawing Sheet Title:

ARCHITECTURAL
SITE PLAN

Drawing Sheet Number:

AS-100

Owner's Drawing Sheet No.:

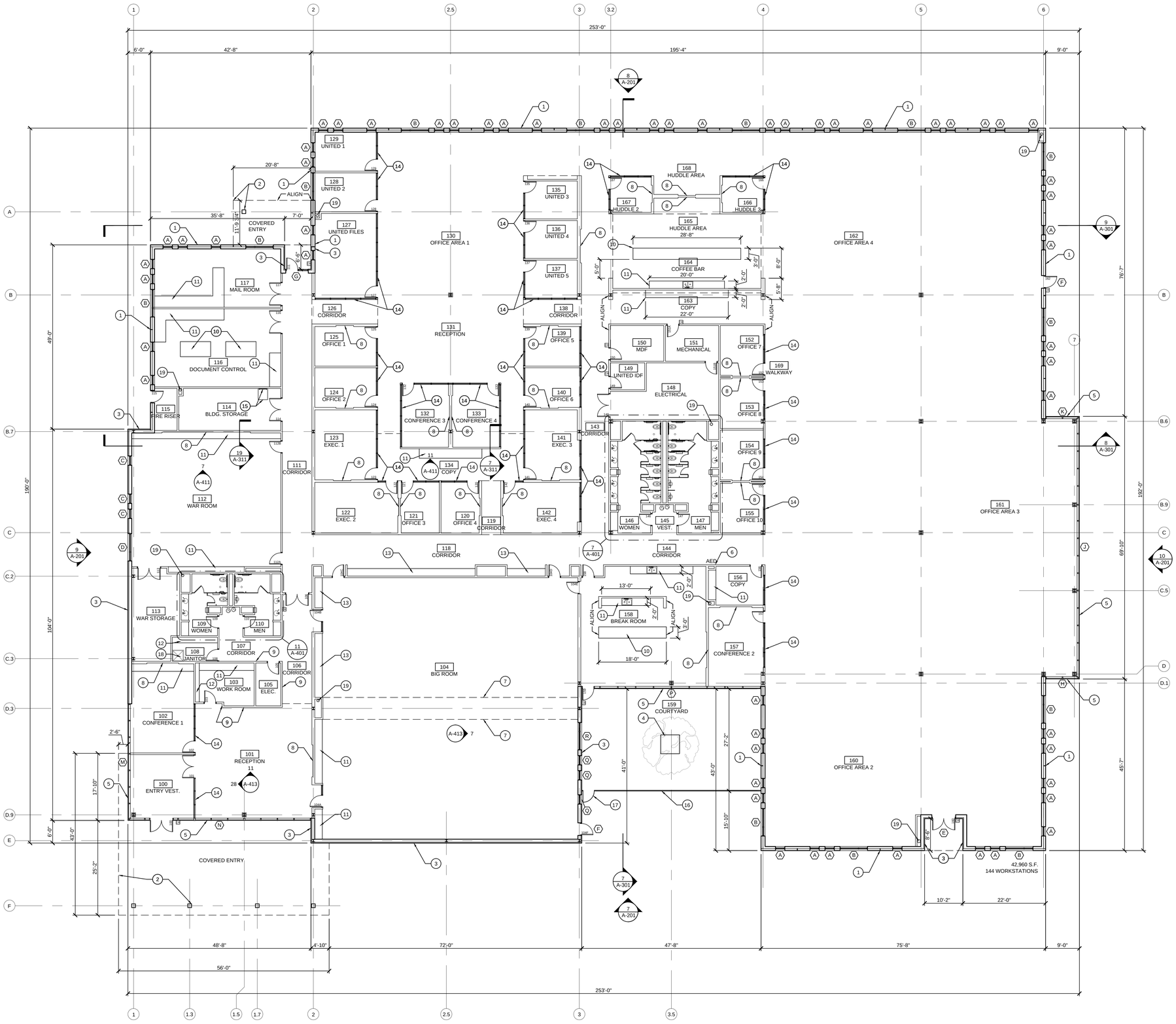

1. CONCRETE TILT WALL, RE: A-211 FOR LAYOUT
2. 12" X 12" PREFINISHED ALUM. COLUMNS & ENTRY CANOPY ABOVE
3. METAL PANEL WALL
4. COURTYARD TREE IN PLANTER BOX
5. GLASS CURTAIN WALL
6. RECESSED AED CABINET
7. EDGE OF VERTICALLY FOLDING ROOM PARTITION HOUSING ABOVE
8. 3" RECESSED NICHE FOR WALL MOUNTED MONITOR
9. LOCATION OF FEATURE WALL (DIMENSIONAL WALL PANEL), RE: 11/A-413
10. 38" TALL MILLWORK COUNTERTOP TABLE AND STORAGE
11. 36" TALL MILLWORK COUNTERTOP AND STORAGE
12. MILLWORK SHELVING
13. 36" HIGH COUNTERTOP
14. GLASS STOREFRONT PARTITION
15. ROOF HATCH (ABOVE) AND LADDER
16. 9'-0" TALL ORNAMENTAL STEEL FENCE
17. 3'-0" WIDE ORNAMENTAL STEEL GATE
18. JANITORS MOP SINK; RE: PLUMBING
19. LOCATION OF ROOF DRAIN DOWNSPOUT, RE: PLUMBING

SHEET KEYNOTES

NO SCALE 3

1. REFER TO G-001 FOR DIMENSION STANDARDS.
2. REFER TO A-602 FOR ROOM FINISH SCHEDULE.
3. REFER TO A-603 FOR FINISH LEGEND.
4. REFER TO A-604 FOR DOOR SCHEDULES AND TYPES.
5. REFER TO A-607 FOR WINDOW AND GLAZING TYPES AND SCHEDULES.
6. REFER TO A-607 FOR WINDOW SHADE LOCATIONS AND SCHEDULES.
7. REFER TO A-121 FOR REFLECTED CEILING PLAN.
8. COORDINATE AND PROVIDE FIRE RATED BLOCKING FOR ALL CASEWORK/MILLWORK AND ITEMS ATTACHED OR MOUNTED TO WALLS AND CEILINGS.
9. COORDINATE ALL MILLWORK INSTALLATIONS WITH SUBCONTRACTORS. ALL "BUILT-IN" MILLWORK SHALL BE SCRIBED TO ADJOINING WALLS, FLOORS, AND CEILING WITHOUT ADDITIONAL OVERLAYS. CAULK ALL JOINTS WITH ALL WALLS.
10. PROVIDE 4'X8'X1/2" FIRE TREATED PLYWOOD PANEL FOR PHONE BOARD AND DATA EQUIPMENT. ATTACH TO WALL WITH BOTTOM EDGE AT 1'-0" A.F.F. PAINT TO MATCH ADJACENT WALL.
11. PROVIDE PORTABLE FIRE EXTINGUISHERS WITH A RATING OF NOT LESS THAN 2A WITHIN 75 FOOT TRAVEL DISTANCE TO ALL PORTIONS OF THE BUILDING ON THIS FLOOR. ADDITIONAL EXTINGUISHERS AS REQUIRED BY THE FIRE DEPARTMENT FIELD INSPECTOR OR BUILDING DEPARTMENT INSPECTOR.
12. COORDINATE ALL DATA, TELECOM, AND IT WITH OWNER REPRESENTATIVE.
13. DOOR CLOSERS AND GATE CLOSERS SHALL BE ADJUSTED SO THAT FROM AN OPEN POSITION OF 90 DEGREES, THE TIME REQUIRED TO MOVE THE DOOR TO A POSITION OF 12 DEGREES FROM THE LATCH IS 5 SECONDS.
14. FIRE DOORS SHALL HAVE A MINIMUM OPENING FORCE ALLOWABLE BY THE APPROPRIATE ADMINISTRATIVE AUTHORITY. THE FORCE FOR PUSHING OR PULLING OPEN A DOOR OR GATE OTHER THAN FIRE DOORS SHALL BE AS FOLLOWS:
    A. INTERIOR HINGED DOORS AND GATES: 5 POUNDS MAXIMUM
    B. SLIDING OR FOLDING DOORS: 5 POUNDS MAXIMUM
15. AUTOMATIC DOORS AND AUTOMATIC GATES SHALL COMPLY WITH TAS SECTION 404.3. FULL POWERED AUTOMATIC DOORS SHALL COMPLY WITH ANSI/BHMA A156.10. LOW ENERGY AND POWER-ASSISTED DOORS SHALL COMPLY WITH ANSI/BHMA A156.19 (1997 OR 2002 EDITION).

GENERAL NOTES

NO SCALE 1

ARCHITECTURAL FLOOR PLAN

3/32" = 1'-0" 7

HOUSTON AIRPORT SYSTEM

APPROVED

HOUSTON AIRPORT SYSTEM
DIRECTOR OR DESIGNATED
PDC REPRESENTATIVE

DATE

JACOBS

5985 Rogerdale Road
Houston, Texas
77072

P 832.351.6000
F 281.776.2501
W www.jacobs.com

TBPE Firm #2966

Seals:

THESE DOCUMENTS ARE FOR INTERIM REVIEW AND NOT FOR CONSTRUCTION, BIDDING OR PERMIT PURPOSES.

RESPONSIBLE ARCHITECT
CHRISTOPHER M. CASEY
24309
8-4-15

Project Client:
Houston Airport System
Project Address

Program Management Office

George Bush
Intercontinental Airport (IAH)

115 Standifer St.
Humble, TX 77338

Number	Description	Date
	95% REVIEW OF BRIDGING DOCUMENTS	21 MAY 2015
	100% BRIDGING DOCUMENTS	4 AUG 2015

Key Plan

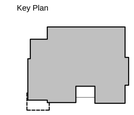

Project North

0 8 16 32
GRAPHIC SCALE: 3/32" = 1'-0"

Project No.:

Copyright: 2015 Jacobs Engineering

TDLR #:

Drawing Sheet Title:

ARCHITECTURAL
FLOOR PLAN

Drawing Sheet Number:

A-101

Owner's Drawing Sheet No.:

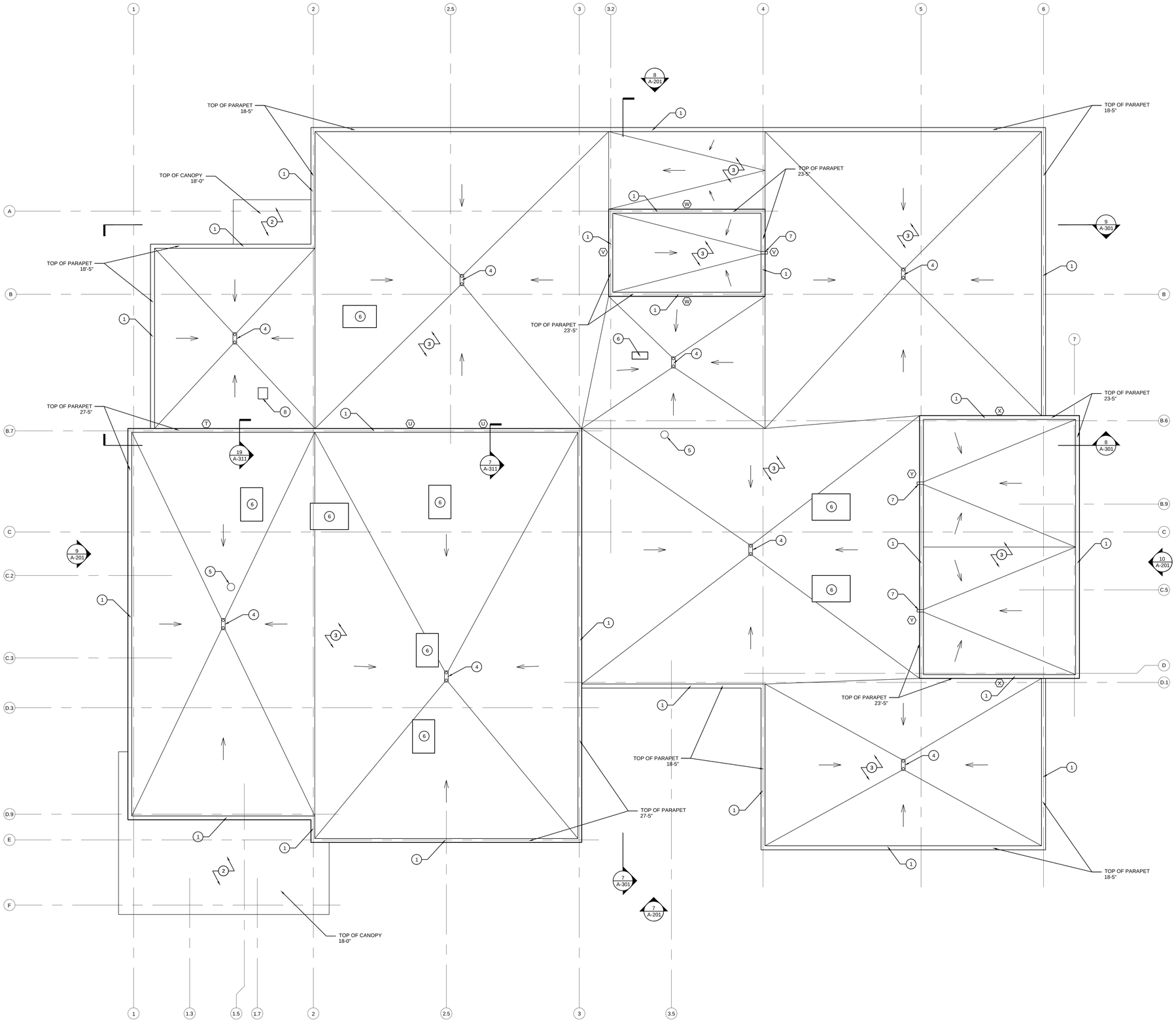

ARCHITECTURAL ROOF PLAN

3/32" = 1'-0" **7**

1. METAL PARAPET CAP
2. PREFINISHED ALUMINUM ENTRY CANOPY BELOW
3. 60 MIL REINFORCED FULLY ADHERED PVC SINGLE PLY ROOFING SYSTEM, TYP.
4. ROOF DRAIN AND OVERFLOW DRAIN, RE: PLUMBING
5. EXHAUST FAN, RE: MECHANICAL
6. ROOFTOP HVAC UNIT, RE: MECHANICAL
7. DRAINAGE SCUPPER AND DOWNSPOUT TO LOWER ROOF BELOW
8. ROOF HATCH

SHEET KEYNOTES

NO SCALE **2**

1. REFER TO G-002 FOR SHEET GENERAL INFORMATION, GRAPHIC SYMBOLS AND ABBREVIATIONS.
2. REFER TO MECHANICAL, ELECTRICAL AND PLUMBING DRAWINGS FOR ADDITIONAL ROOF PENETRATION INFORMATION.
3. CONTRACTOR SHALL IMMEDIATELY NOTIFY ARCHITECT OF ANY DISCREPANCY IN CONDITIONS OR DRAWINGS & SHALL NOT CONTINUE WITH THAT PORTION OF THE WORK UNTIL THE DISCREPANCY IS RESOLVED.
4. PROVIDE 1/4" PER FT SLOPE MINIMUM AT ROOF FIELD, SLOPE TO DRAIN. PROVIDE 1/4" PER FT SLOPE MINIMUM AT ALL CRICKETS AND TAPERED INSULATION.
5. PAINT ALL EXPOSED METAL SURFACES ON ROOF, INCLUDING PRIMED SURFACES.
6. ALL ROOF PENETRATIONS TO RECEIVE CONTINUOUS FLASHING OR TO USE SELF-FLASHING HARDWARE

GENERAL NOTES

NO SCALE **1**

HOUSTON AIRPORT SYSTEM

APPROVED

HOUSTON AIRPORT SYSTEM DIRECTOR OR DESIGNATED PDC REPRESENTATIVE — DATE

JACOBS
5985 Rogerdale Road
Houston, Texas
77072

P 832.351.6000
F 281.776.2501
W www.jacobs.com

TBPE Firm #2966

Seals:

THESE DOCUMENTS ARE FOR INTERIM REVIEW AND NOT FOR CONSTRUCTION, BIDDING OR PERMIT PURPOSES.

RESPONSIBLE ARCHITECT
CHRISTOPHER M. CASEY
24309
8-4-15

Project Client:
Houston Airport System
Project Address

Program Management Office

George Bush
Intercontinental Airport (IAH)

115 Standifer St.
Humble, TX 77338

Number	Description	Date
	95% REVIEW OF BRIDGING DOCUMENTS	21 MAY 2015
	100% BRIDGING DOCUMENTS	4 AUG 2015

Key Plan

Project North

0 8 16 32
GRAPHIC SCALE: 3/32" = 1'-0"

Project No.:

Copyright: 2015 Jacobs Engineering

TDLR #:

Drawing Sheet Title:

ARCHITECTURAL ROOF PLAN

Drawing Sheet Number:

A-111

Owner's Drawing Sheet No.:

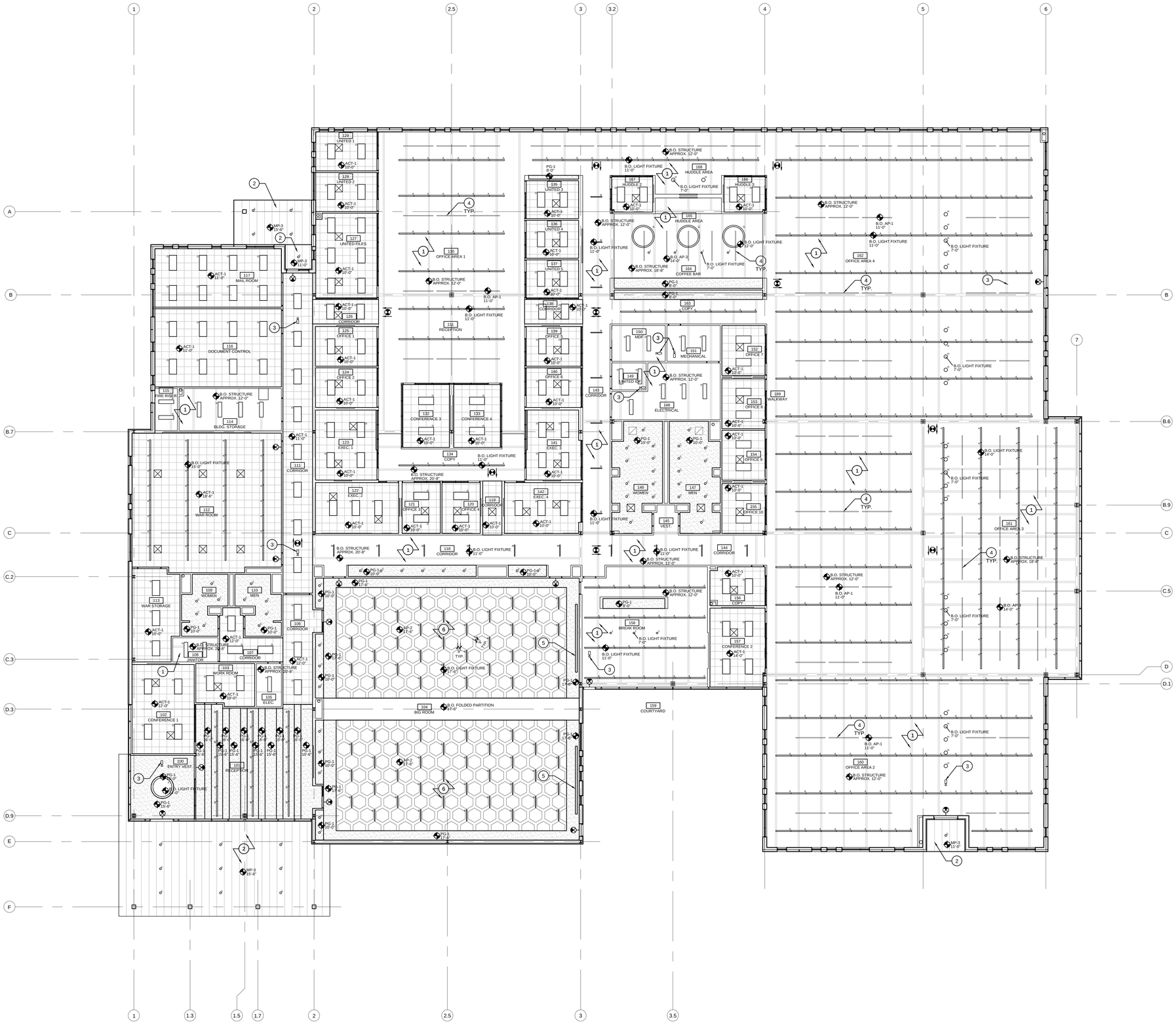

LEGEND

NO SCALE **4**

- EXIT SIGN, RE: FIRE SAFETY DRAWINGS
- M — RECESSED LED LIGHT FIXTURE
- J, H — SUSPENDED LED PENDANT LIGHT FIXTURE
- C, L — 6" DIA. RECESSED LED DOWNLIGHT
- A, B — SUSPENDED LED LIGHT FIXTURE
- F — SUSPENDED LED LIGHT FIXTURE
- G — SUSPENDED LED LIGHT FIXTURE
- K — 1' X 4' SUSPENDED LED LIGHT FIXTURE
- D — 2' X 4' RECESSED LED LIGHT FIXTURE
- HVAC GRILLE (RE: MECHANICAL DRAWINGS)
- 2' X 2' LAY-IN ACOUSTICAL CEILING TILE GRID
- PAINTED GYPSUM BOARD CEILING
- PAINTED EXPOSED STRUCTURE (RE: STRUCTURAL DRAWINGS)
- SUSPENDED ACOUSTICAL PANEL
- SUSPENDED VERTICAL ACOUSTICAL PANEL

SHEET KEYNOTES

NO SCALE **3**

1. AREA OPEN TO STRUCTURE
2. METAL PANEL SOFFIT
3. SECURITY CAMERA, RE: TECHNOLOGY
4. SUSPENDED 94" LONG BY 22" TALL BY 2" THICK VERTICAL ACOUSTICAL PANEL
5. RECESSED MOTORIZED PROJECTION SCREEN, RE: TECHNOLOGY
6. SUSPENDED HEXAGON SHAPED ACOUSTICAL PANEL LAYOUT WITH 9" SPACE TYP. BETWEEN PANELS ON ALL SIDES. OPEN TO STRUCTURE ABOVE PANELS.

GENERAL NOTES

NO SCALE **1**

1. RECESSED LIGHT FIXTURES ARE LOCATED CENTER OF CEILING TILE, EACH WAY, UNLESS NOTED OTHERWISE
2. REFER TO ELECTRICAL LEGEND FOR FIXTURE SCHEDULE AND SPECIFICATIONS
3. LOCATE REGISTERS WITHIN THE GRID LINES AND COORDINATE WITH LIGHT FIXTURE LAYOUT; REFER TO MECHANICAL DRAWINGS FOR REGISTER LOCATIONS
4. FINISH OF HVAC DIFFUSERS, RA GRILLES, DRAPERY POCKETS, AND SPEAKER GRILLES SHALL MATCH ADJACENT CEILING FINISH, UNLESS NOTED OTHERWISE
5. SPRINKLER HEADS ARE TO BE LOCATED CENTER OF EACH CEILING TILE, EACH WAY. COORDINATE WITH LIGHT FIXTURE LAYOUT.
6. SPRINKLER CONTRACTOR TO SUBMIT LOCATION DIAGRAM TO ARCHITECT FOR APPROVAL PRIOR TO STARTING WORK
7. SUSPENDED CEILING FRAMING SYSTEMS SHALL BE DESIGNED TO RESIST A LATERAL FORCE OF 20% OF THE WEIGHT OF THE CEILING ASSEMBLY AND ANY LOADS TRIBUTARY TO THE SYSTEM; USE A MINIMUM CEILING WEIGHT OF 5 POUNDS PER SQUARE FOOT TO DETERMINE THE LATERAL FORCE
8. WHERE CEILING LOADS DO NOT EXCEED 5 POUNDS PER SQUARE FOOT AND WHERE PARTITIONS ARE NOT CONNECTED TO THE CEILING SYSTEM, THE FOLLOWING BRACING METHODS MAY BE EMPLOYED:
   - 8.1. PROVIDE A LATERAL SUPPORT BY FOUR WIRES OF MINIMUM NO. 12 GA, SPLAYED IN FOUR DIRECTIONS 90 DEGREES APART AND CONNECTED TO THE MAIN RUNNER WITHIN 2" OF THE CROSS RUNNER AND TO THE STRUCTURE ABOVE AT AN ANGLE NOT EXCEEDING 45 DEGREES FROM PLANE OF CEILING; PROVIDE THESE LATERAL SUPPORT POINTS 12 FEET ON CENTER, EACH WAY, WITH THE FIRST POINT WITHIN 4' FROM EACH WALL
   - 8.2. ALL FOR LATERAL MOVEMENT OF THE SYSTEM, ATTACH MAIN RUNNERS AND CROSS RUNNERS AT TWO ADJACENT WALLS; MAINTAIN CLEARANCE BETWEEN THE WALL AND THE RUNNERS AT THE OTHER TWO WALLS
   - 8.3. PROVIDE VERTICAL SUPPORTS AS REQUIRED BY THE BUILDING CODE; IN ADDITION, VERTICALLY SUPPORT ENDS OF RUNNERS WITHIN 8" DISCONTINUITIES SUCH AS MAY OCCUR WHERE THE CEILING IS INTERRUPTED BY A WALL
   - 8.4. SUPPORT LIGHT FIXTURES AND AIR DIFFUSERS DIRECTLY BY WIRES TO THE STRUCTURE ABOVE
9. ALL CEILING REVEALS SHALL TURN UP TO MEET CEILING ABOVE
10. ALL DIMENSIONS ARE TO CENTER OF LIGHT AND/OR CEILING MOUNTED FIXTURES, UNLESS NOTED OTHERWISE
11. UNDERSIDE OF ROOF DECK, ALL EXPOSED STRUCTURE, AND WALLS ABOVE SUSPENDED ACOUSTICAL PANELS TO BE PAINTED WHITE (OTS-1).
12. REFER TO STRUCTURAL DRAWINGS FOR LOCATIONS OF FRAMING MEMBERS.

ARCHITECTURAL REFLECTED CEILING PLAN

3/32" = 1'-0" **7**

HOUSTON AIRPORT SYSTEM

APPROVED

HOUSTON AIRPORT SYSTEM DIRECTOR OR DESIGNATED PDC REPRESENTATIVE — DATE

JACOBS

5985 Rogerdale Road
Houston, Texas
77072

P 832.351.6000
F 281.776.2501
W www.jacobs.com

TBPE Firm #2966

Seals:

THESE DOCUMENTS ARE FOR INTERIM REVIEW AND NOT FOR CONSTRUCTION, BIDDING OR PERMIT PURPOSES.

RESPONSIBLE ARCHITECT
CHRISTOPHER M. CASEY
24309
8-4-15

Project Client:
Houston Airport System
Project Address

Program Management Office

George Bush Intercontinental Airport (IAH)

115 Standifer St.
Humble, TX 77338

Number	Description	Date
	95% REVIEW OF BRIDGING DOCUMENTS	21 MAY 2015
	100% BRIDGING DOCUMENTS	4 AUG 2015

Key Plan

Project North

0 8 16 32
GRAPHIC SCALE: 3/32" = 1'-0"

Project No.:

Copyright: 2015 Jacobs Engineering

TDLR #:

Drawing Sheet Title:

ARCHITECTURAL REFLECTED CEILING PLAN

Drawing Sheet Number:

A-121

Owner's Drawing Sheet No.:

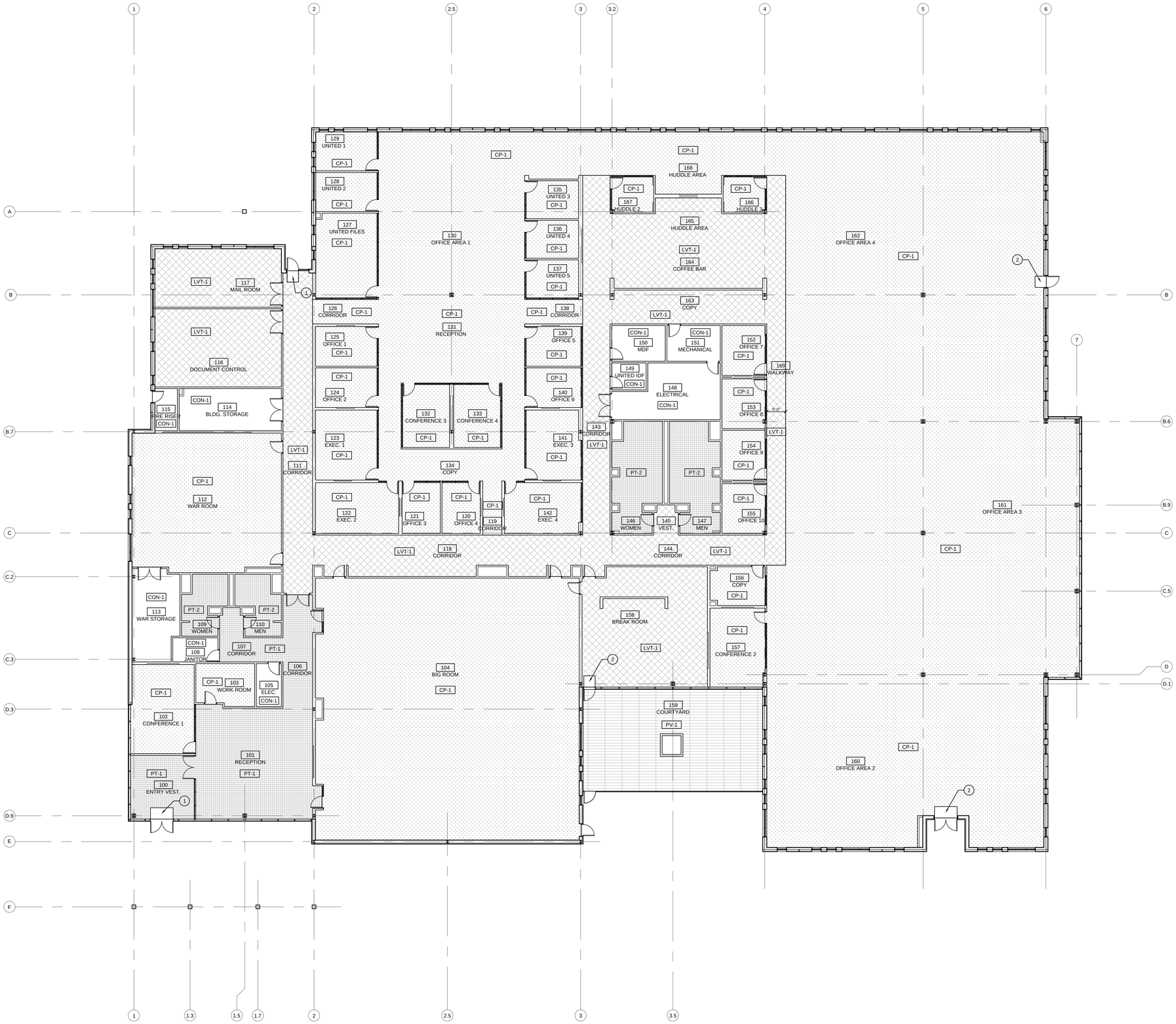

LEGEND

NO SCALE 3

- CONCRETE PAVERS
- LVT
- CARPET
- PORCELAIN TILE
- FINISHED CONCRETE

SHEET KEYNOTES

NO SCALE 2

1. RECESSED METAL GRILLE WALK-OFF MAT
2. STANDARD WALK-OFF MAT

GENERAL NOTES

NO SCALE 1

1. REFER TO A-602 FOR ROOM FINISH SCHEDULE.
2. REFER TO A-603 FOR FINISH LEGEND.

ARCHITECTURAL FLOOR FINISH PLAN

3/32" = 1'-0" 7

HOUSTON AIRPORT SYSTEM

APPROVED

HOUSTON AIRPORT SYSTEM DIRECTOR OR DESIGNATED PDC REPRESENTATIVE — DATE

JACOBS

5985 Rogerdale Road
Houston, Texas
77072

P 832.351.6000
F 281.776.2501
W www.jacobs.com

TBPE Firm #2966

Seals:

THESE DOCUMENTS ARE FOR INTERIM REVIEW AND NOT FOR CONSTRUCTION, BIDDING OR PERMIT PURPOSES.

RESPONSIBLE ARCHITECT
CHRISTOPHER M. CASEY
24309
8-4-15

Project Client:
Houston Airport System

Project Address

Program Management Office

George Bush Intercontinental Airport (IAH)

115 Standifer St.
Humble, TX 77338

Number	Description	Date
	95% REVIEW OF BRIDGING DOCUMENTS	21 MAY 2015
	100% BRIDGING DOCUMENTS	4 AUG 2015

Key Plan

Project North

0 8 16 32
GRAPHIC SCALE: 3/32" = 1'-0"

Project No.:

Copyright: 2015 Jacobs Engineering

TDLR #:

Drawing Sheet Title:

ARCHITECTURAL FLOOR FINISH PLAN

Drawing Sheet Number:

A-131

Owner's Drawing Sheet No.:

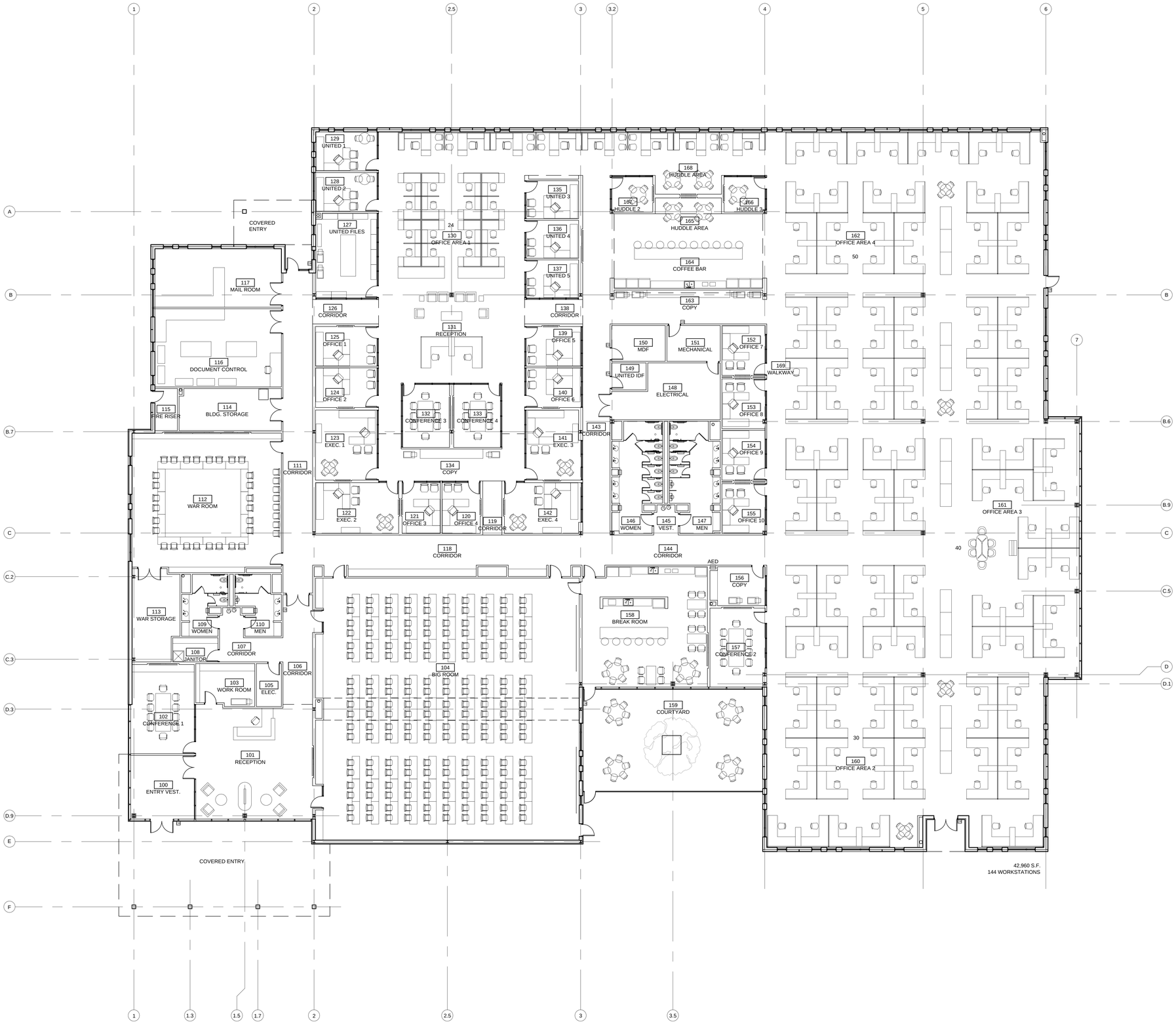

1. FURNITURE AND EQUIPMENT BY OWNER (NOT IN SCOPE). LAYOUT IS PROVIDED FOR REFERENCE ONLY

ARCHITECTURAL FURNITURE AND EQUIPMENT PLAN (NOT IN SCOPE, FOR REFERENCE ONLY) | 3/32" = 1'-0" | 7

GENERAL NOTES | NO SCALE | 1

HOUSTON AIRPORT SYSTEM

APPROVED

HOUSTON AIRPORT SYSTEM DIRECTOR OR DESIGNATED PDC REPRESENTATIVE — DATE

JACOBS
5985 Rogerdale Road
Houston, Texas
77072

P 832.351.6000
F 281.776.2501
W www.jacobs.com

TBPE Firm #2966

Seals:

THESE DOCUMENTS ARE FOR INTERIM REVIEW AND NOT FOR CONSTRUCTION, BIDDING OR PERMIT PURPOSES.

RESPONSIBLE ARCHITECT
CHRISTOPHER M. CASEY
24309
8-4-15

Project Client:
Houston Airport System
Project Address

Program Management Office

George Bush Intercontinental Airport (IAH)

115 Standifer St.
Humble, TX 77338

Number	Description	Date
	95% REVIEW OF BRIDGING DOCUMENTS	21 MAY 2015
	100% BRIDGING DOCUMENTS	4 AUG 2015

Key Plan

Project North

0 8 16 32
GRAPHIC SCALE: 3/32" = 1'-0"

Project No.:

Copyright: 2015 Jacobs Engineering

TDLR #:

Drawing Sheet Title:

ARCHITECTURAL FURNITURE AND EQUIPMENT PLAN (FOR REFERENCE ONLY)

Drawing Sheet Number:

A-141

Owner's Drawing Sheet No.:

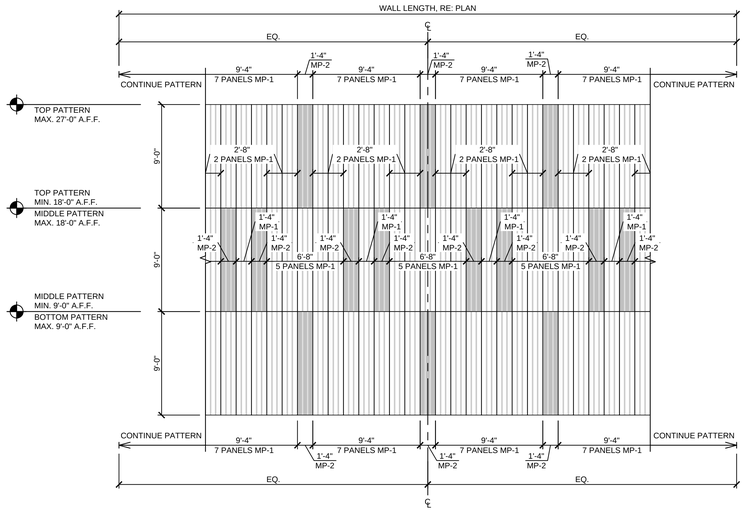

ENLARGED TYP. METAL PANEL PATTERN 3/16" = 1'-0" 11

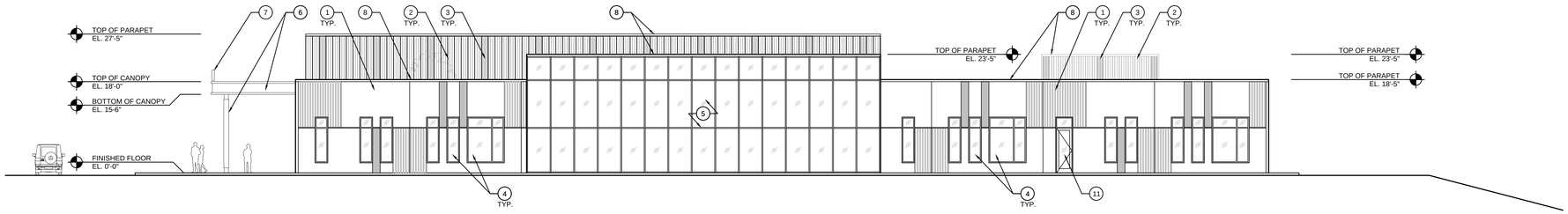

EAST EXTERIOR ELEVATION 3/32" = 1'-0" 10

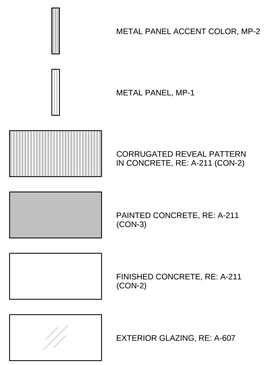

LEGEND NO SCALE 4

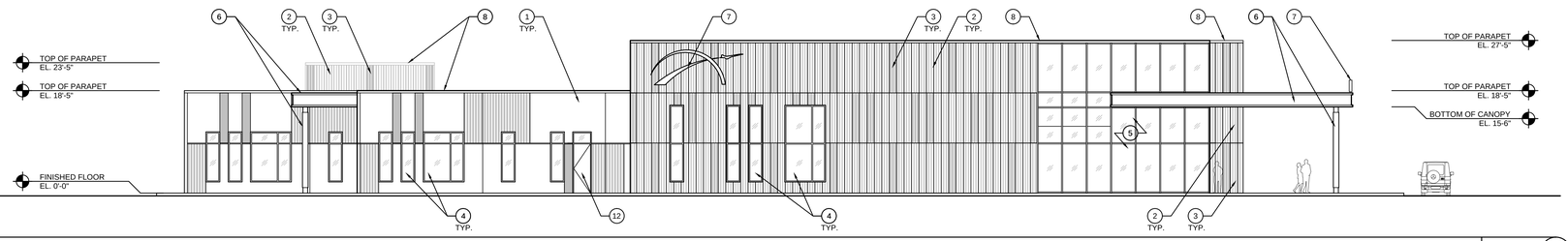

WEST EXTERIOR ELEVATION 3/32" = 1'-0" 9

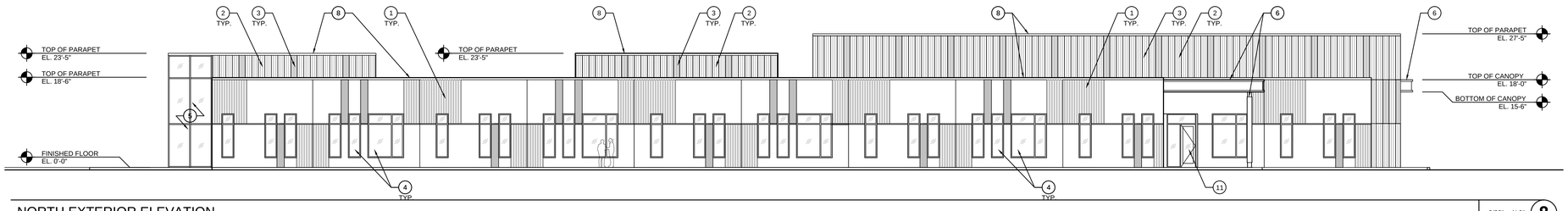

NORTH EXTERIOR ELEVATION 3/32" = 1'-0" 8

1. CONCRETE TILT WALL, RE: A-211 FOR LAYOUT
2. METAL PANEL FIELD COLOR, TYP. (MP-1)
3. METAL PANEL ACCENT COLOR, TYP. (MP-2)
4. WINDOW AND GLAZING, RE: A-607
5. CURTAIN WALL GLAZING, RE: A-607
6. PREFINISHED ALUMINUM CANOPY AND COLUMNS
7. BUILDING SIGNAGE
8. METAL PARAPET CAP, TYP.
9. 9'-0" TALL ORNAMENTAL STEEL FENCE
10. 3'-0" WIDE ORNAMENTAL STEEL FENCE
11. ALUMINUM DOOR AND GLAZING, RE: A-604 AND A-607
12. HOLLOW METAL DOOR AND GLAZING, RE: A-604 AND A-607

SHEET KEYNOTES NO SCALE 2

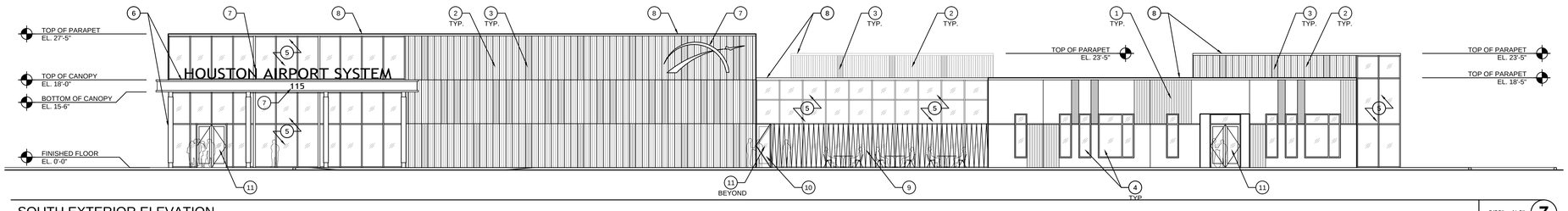

SOUTH EXTERIOR ELEVATION 3/32" = 1'-0" 7

1. REFER TO A-101 FOR WINDOW TYPES AND DOOR LOCATIONS.
2. REFER TO A-211 FOR TILT WALL PANEL LAYOUT AND TYPES.
3. REFER TO A-603 FOR FINISH LEGEND.
4. REFER TO A-604 FOR DOOR SCHEDULES AND TYPES.
5. REFER TO A-607 FOR WINDOW AND GLAZING TYPES AND SCHEDULES.

GENERAL NOTES NO SCALE 1

HOUSTON AIRPORT SYSTEM

APPROVED

HOUSTON AIRPORT SYSTEM DIRECTOR OR DESIGNATED PDC REPRESENTATIVE — DATE

JACOBS

5985 Rogerdale Road
Houston, Texas
77072

P 832.351.6000
F 281.776.2501
W www.jacobs.com

TBPE Firm #2966

Seals:

THESE DOCUMENTS ARE FOR INTERIM REVIEW AND NOT FOR CONSTRUCTION, BIDDING OR PERMIT PURPOSES.

RESPONSIBLE ARCHITECT
CHRISTOPHER M. CASEY
24309
8–4–15

Project Client:
Houston Airport System
Project Address

Program Management Office

George Bush Intercontinental Airport (IAH)

115 Standifer St.
Humble, TX 77338

Number	Description	Date
	95% REVIEW OF BRIDGING DOCUMENTS	21 MAY 2015
	100% BRIDGING DOCUMENTS	4 AUG 2015

Key Plan

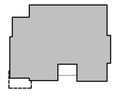

Project North

0 8 16 32
GRAPHIC SCALE: 3/32" = 1'-0"

Project No.:

Copyright: 2015 Jacobs Engineering

TDLR #:

Drawing Sheet Title:

EXTERIOR ELEVATIONS

Drawing Sheet Number:

A-201

Owner's Drawing Sheet No.:

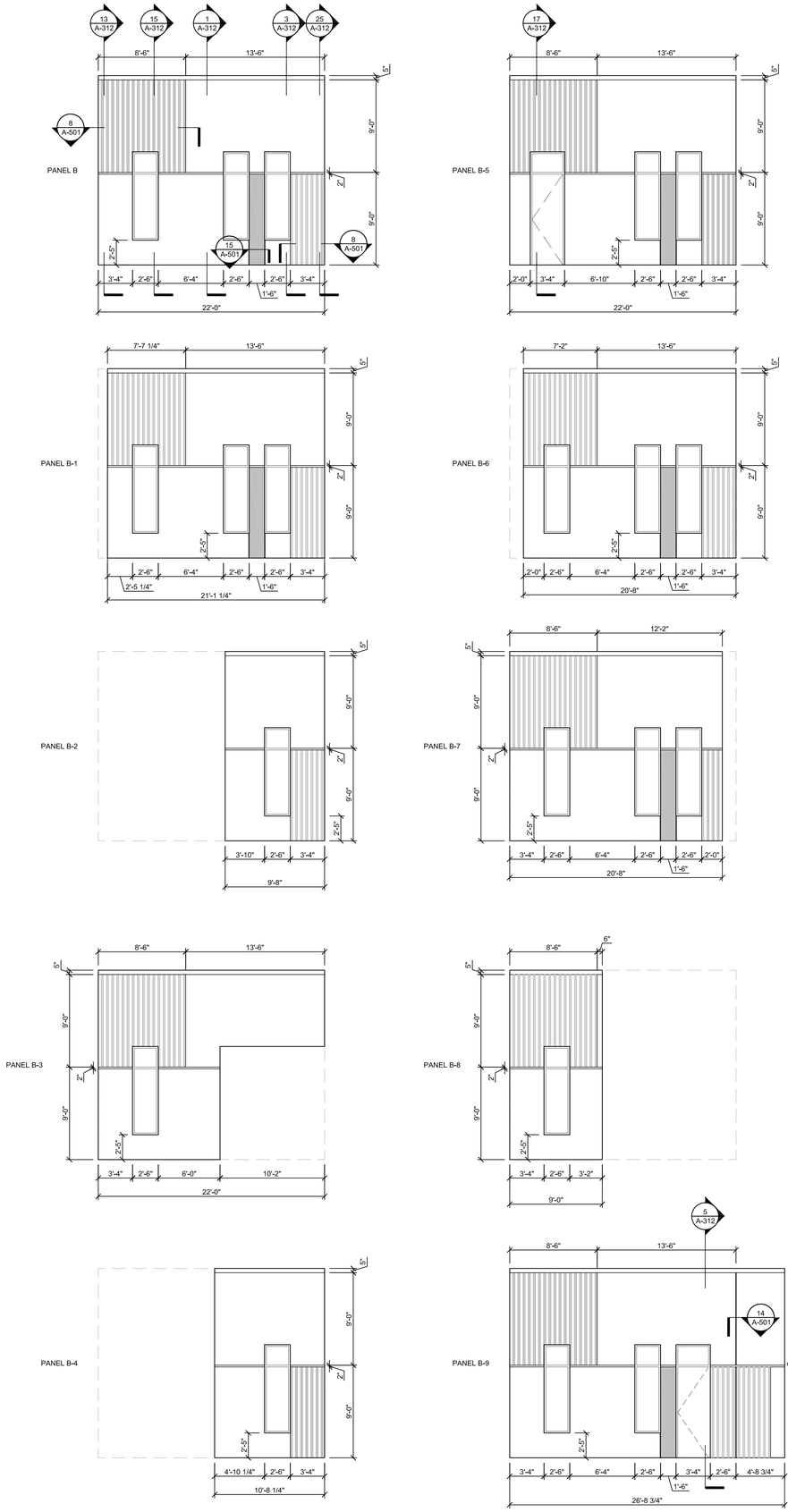

TILT WALL PANEL TYPES

3/16" = 1'-0" 7

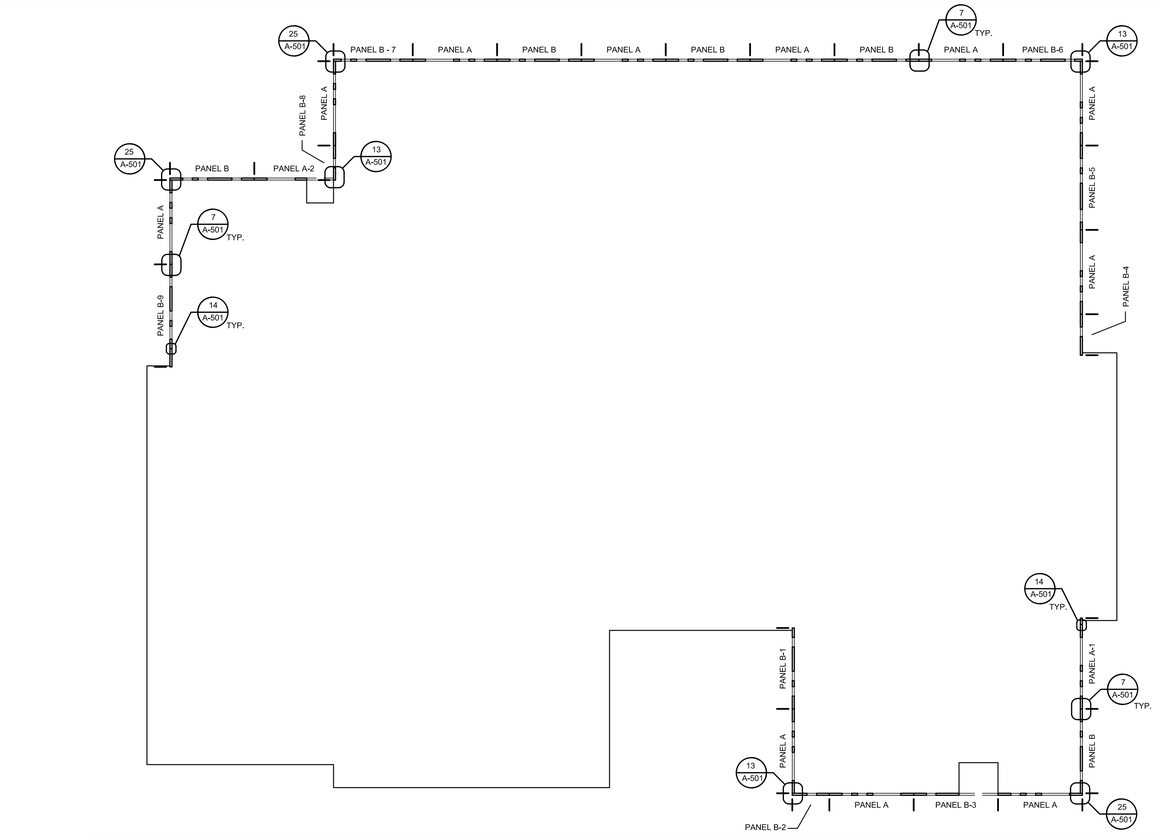

TILT WALL PANEL LAYOUT PLAN

1/16" = 1'-0" 4

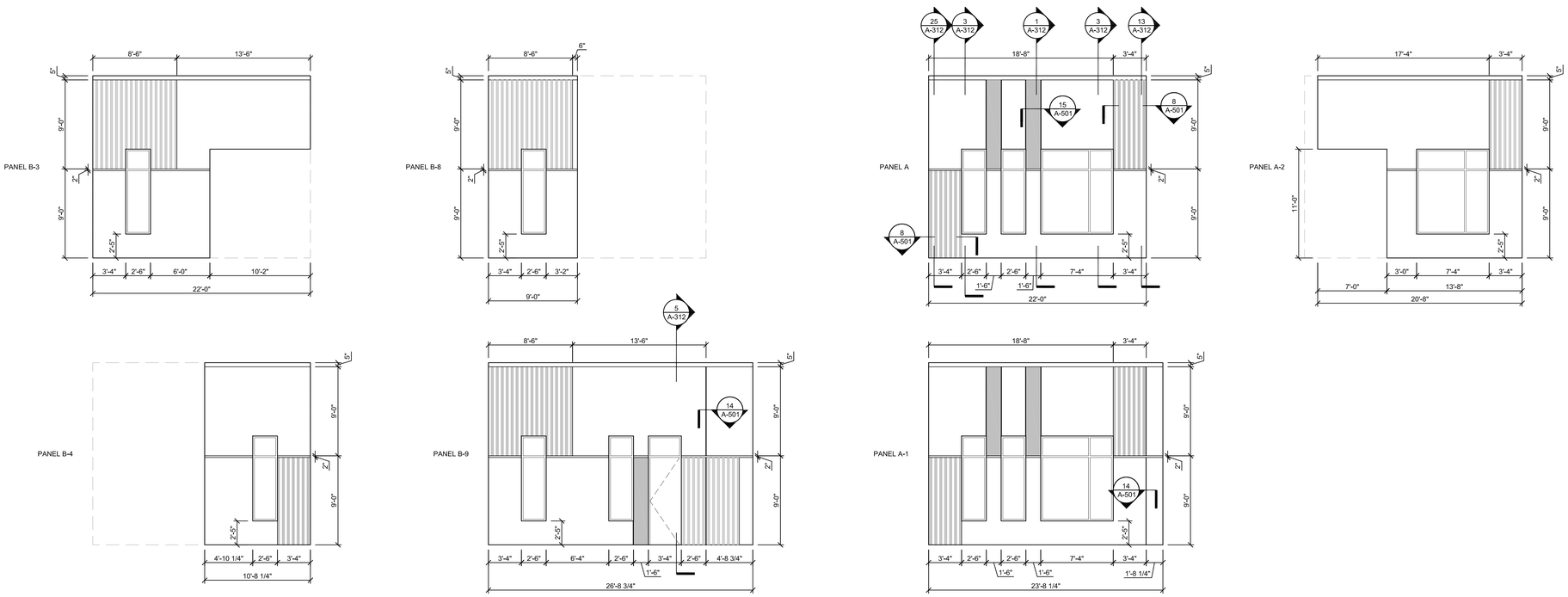

PAINTED CONCRETE (CON-3)

CORRUGATED REVEAL PATTERN IN PANEL SURFACE, FORMED BY MBCI PBU METAL PANEL IN FORMWORK (CON-2)

FINISHED CONCRETE (CON-2)

LEGEND

NO SCALE 1

1. REFER TO A-312 FOR TILT WALL SECTIONS.
2. REFER TO A-501 FOR TILT WALL PLAN DETAILS.
3. REFER TO A-511 FOR TILT WALL SECTION DETAILS.
4. FIELD VERIFY ALL EXISTING SLAB DIMENSIONS PRIOR TO FABRICATION.

GENERAL NOTES

NO SCALE 1

HOUSTON AIRPORT SYSTEM

APPROVED

HOUSTON AIRPORT SYSTEM DIRECTOR OR DESIGNATED PDC REPRESENTATIVE — DATE

JACOBS

5985 Rogerdale Road
Houston, Texas
77072

P 832.351.6000
F 281.776.2501
W www.jacobs.com

TBPE Firm #2966

Seals:

THESE DOCUMENTS ARE FOR INTERIM REVIEW AND NOT FOR CONSTRUCTION, BIDDING OR PERMIT PURPOSES.

RESPONSIBLE ARCHITECT
CHRISTOPHER M. CASEY
24309
8-4-15

Project Client:
Houston Airport System
Project Address

Program Management Office

George Bush
Intercontinental Airport (IAH)

115 Standifer St.
Humble, TX 77338

Number	Description	Date
	95% REVIEW OF BRIDGING DOCUMENTS	21 MAY 2015
	100% BRIDGING DOCUMENTS	4 AUG 2015

Key Plan

Project North

0 16 32 48

GRAPHIC SCALE: 1/16" = 1'-0"

Project No.:

Copyright: 2015 Jacobs Engineering

TDLR #:

Drawing Sheet Title:

TILT WALL PANEL LAYOUT AND TYPES

Drawing Sheet Number:

A-211

Owner's Drawing Sheet No.:

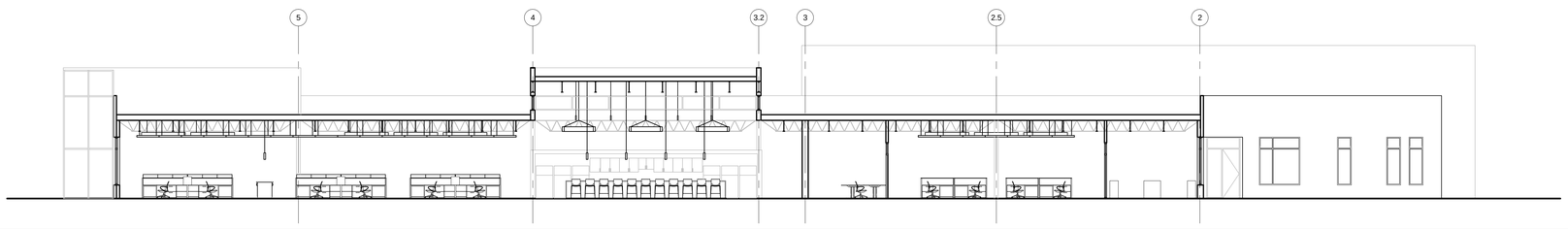

BUILDING SECTION

3/32" = 1'-0" **9**

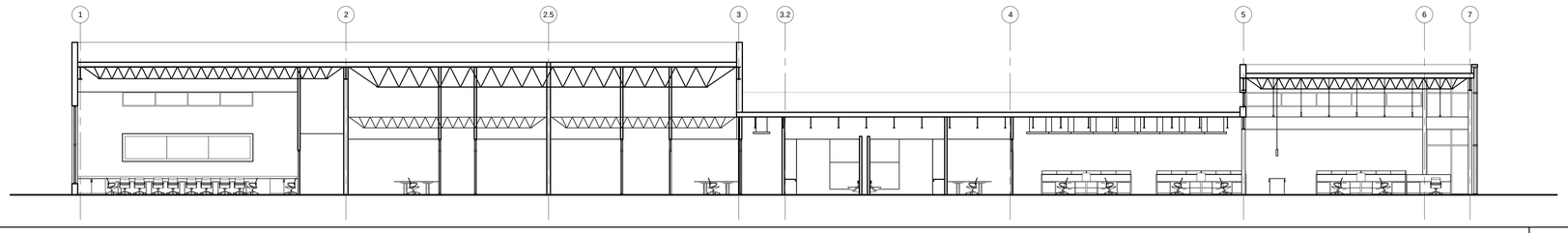

BUILDING SECTION

3/32" = 1'-0" **8**

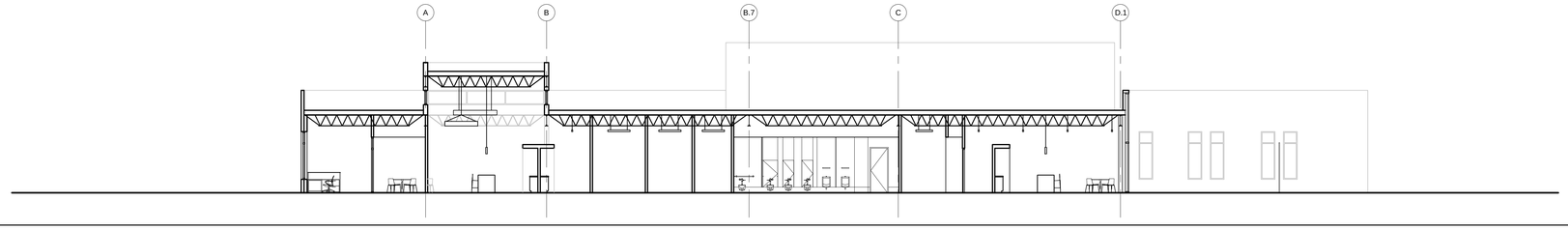

BUILDING SECTION

3/32" = 1'-0" **7**

1. REFER TO A-101 FOR COLUMN GRID, WINDOW TYPES AND DOOR LOCATIONS.
2. REFER TO A-211 FOR TILT WALL PANEL LAYOUT AND TYPES.
3. REFER TO A-603 FOR FINISH LEGEND.
4. REFER TO A-604 FOR DOOR SCHEDULES AND TYPES.
5. REFER TO A-607 FOR WINDOW AND GLAZING TYPES AND SCHEDULES.

GENERAL NOTES

NO SCALE **1**

HOUSTON AIRPORT SYSTEM

APPROVED

HOUSTON AIRPORT SYSTEM
DIRECTOR OR DESIGNATED
PDC REPRESENTATIVE

DATE

JACOBS

5985 Rogerdale Road
Houston, Texas
77072

P 832.351.6000
F 281.776.2501
W www.jacobs.com

TBPE Firm #2966

Seals:

THESE DOCUMENTS ARE FOR INTERIM REVIEW AND NOT FOR CONSTRUCTION, BIDDING OR PERMIT PURPOSES.

RESPONSIBLE ARCHITECT
CHRISTOPHER M. CASEY
24309

8-4-15

Project Client:

Houston Airport System

Project Address

Program Management Office

George Bush
Intercontinental Airport (IAH)

115 Standifer St.
Humble, TX 77338

Number	Description	Date
	95% REVIEW OF BRIDGING DOCUMENTS	21 MAY 2015
	100% BRIDGING DOCUMENTS	4 AUG 2015

Key Plan

Project North

0 8 16 32

GRAPHIC SCALE: 3/32" = 1'-0"

Project No.:

Copyright: 2015 Jacobs Engineering

TDLR #:

Drawing Sheet Title:

BUILDING SECTIONS

Drawing Sheet Number:

A-301

Owner's Drawing Sheet No.:

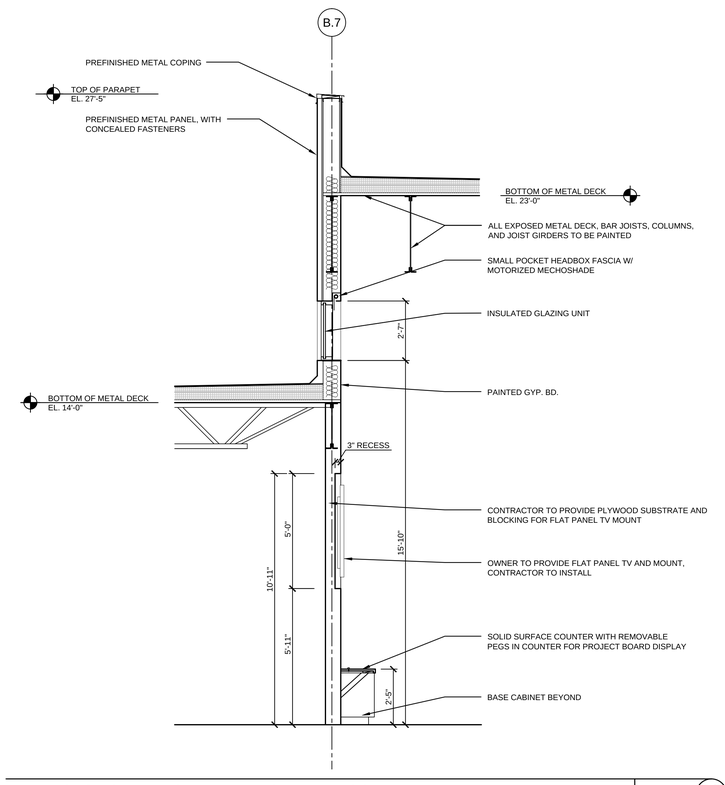

WALL SECTION AT NORTH WALL OF WAR ROOM 3/8" = 1'-0" 19

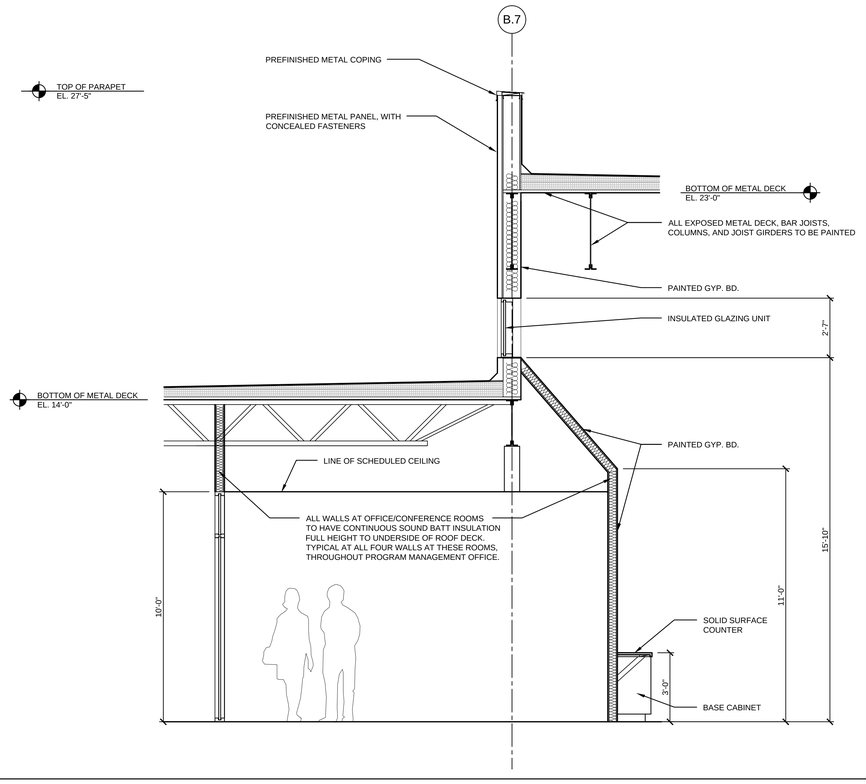

WALL SECTION AT COPY 134 & CONFERENCE ROOMS 132/133 3/8" = 1'-0" 1

HOUSTON AIRPORT SYSTEM

APPROVED

HOUSTON AIRPORT SYSTEM
DIRECTOR OR DESIGNATED
PDC REPRESENTATIVE

DATE

JACOBS

5985 Rogerdale Road
Houston, Texas
77072

P 832.351.6000
F 281.776.2501
W www.jacobs.com

TBPE Firm #2966

Seals:

THESE DOCUMENTS ARE
FOR INTERIM REVIEW AND NOT
FOR CONSTRUCTION, BIDDING
OR PERMIT PURPOSES.

RESPONSIBLE ARCHITECT
CHRISTOPHER M. CASEY
24309

8-4-15

Project Client:

Houston Airport System

Project Address

Program Management Office

George Bush
Intercontinental Airport (IAH)

115 Standifer St.
Humble, TX 77338

Number	Description	Date
	95% REVIEW OF BRIDGING DOCUMENTS	21 MAY 2015
	100% BRIDGING DOCUMENTS	4 AUG 2015

Project No.:

Copyright: 2015 Jacobs Engineering

TDLR #:

Drawing Sheet Title:

WALL SECTIONS

Drawing Sheet Number:

A-311

Owner's Drawing Sheet No.:

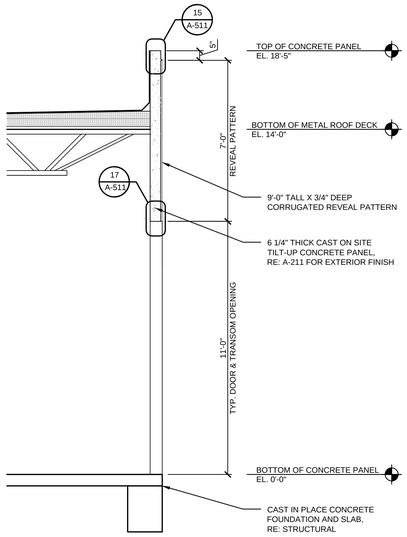

SECTION AT TYP. TILT WALL PANEL DOOR OPENING AT HIGH REVEAL PATTERN

3/8" = 1'-0" **17**

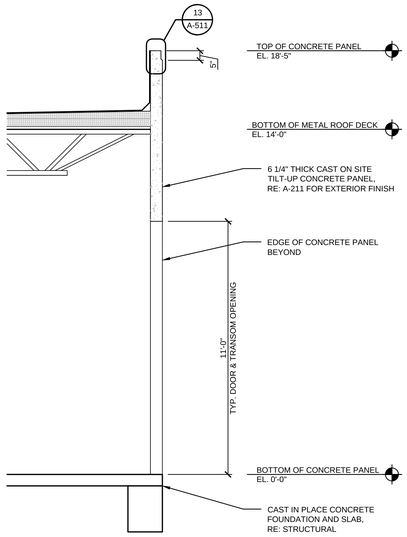

SECTION AT TYP. TILT WALL PANEL DOOR OPENING

3/8" = 1'-0" **5**

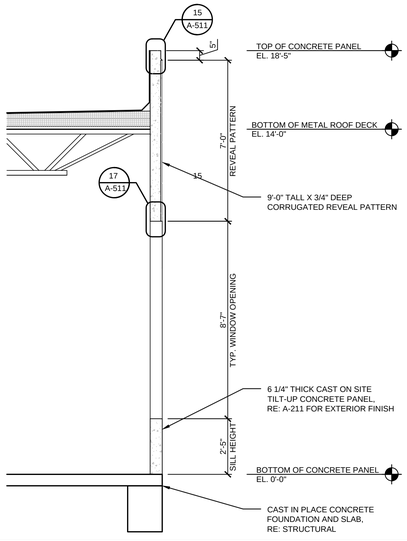

SECTION AT TYP. TILT WALL PANEL WINDOW OPENING AT HIGH REVEAL PATTERN

3/8" = 1'-0" **15**

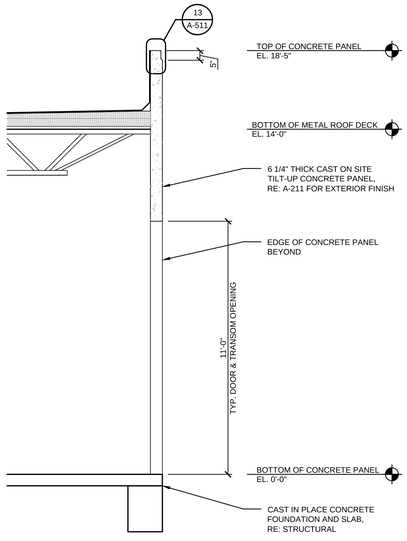

SECTION AT TYP. TILT WALL PANEL WINDOW OPENING

3/8" = 1'-0" **3**

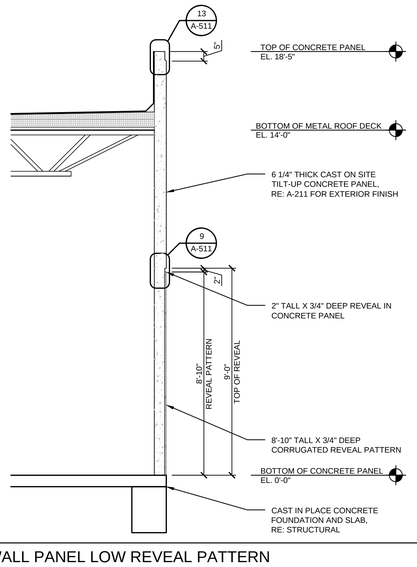

SECTION AT TYP. TILT WALL PANEL LOW REVEAL PATTERN

3/8" = 1'-0" **25**

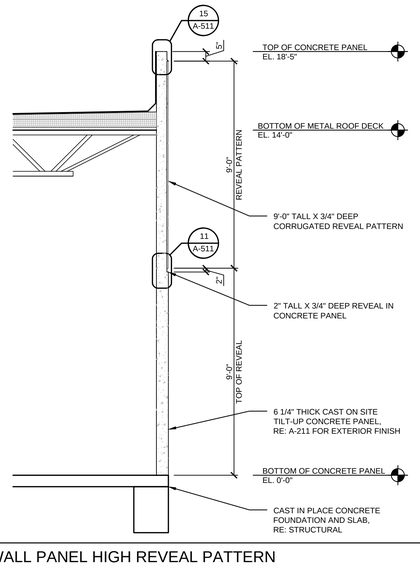

SECTION AT TYP. TILT WALL PANEL HIGH REVEAL PATTERN

3/8" = 1'-0" **13**

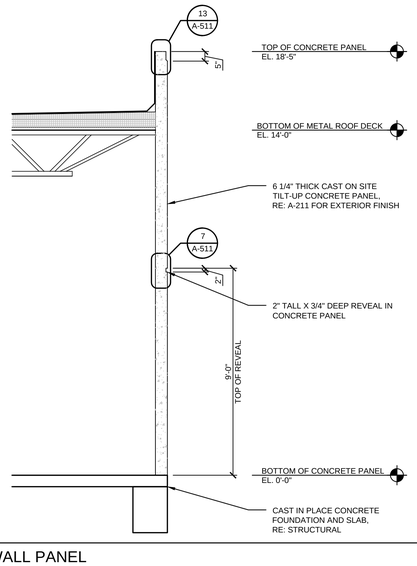

SECTION AT TYP. TILT WALL PANEL

3/8" = 1'-0" **1**

HOUSTON AIRPORT SYSTEM

APPROVED

HOUSTON AIRPORT SYSTEM
DIRECTOR OR DESIGNATED
PDC REPRESENTATIVE

DATE

JACOBS

5985 Rogerdale Road
Houston, Texas
77072

P 832.351.6000
F 281.776.2501
W www.jacobs.com

TBPE Firm #2966

Seals:

THESE DOCUMENTS ARE FOR INTERIM REVIEW AND NOT FOR CONSTRUCTION, BIDDING OR PERMIT PURPOSES.

RESPONSIBLE ARCHITECT
CHRISTOPHER M. CASEY
24309

8-4-15

Project Client:

Houston Airport System

Project Address

Program Management Office

George Bush
Intercontinental Airport (IAH)

115 Standifer St.
Humble, TX 77338

Number	Description	Date
	95% REVIEW OF BRIDGING DOCUMENTS	21 MAY 2015
	100% BRIDGING DOCUMENTS	4 AUG 2015

Project No.:

Copyright: 2015 Jacobs Engineering

TDLR #:

Drawing Sheet Title:

WALL SECTIONS

Drawing Sheet Number:

A-312

Owner's Drawing Sheet No.:

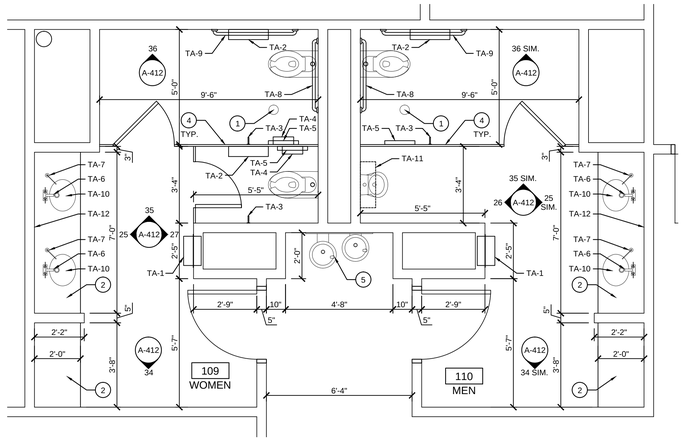

RESTROOMS 109 & 110 — 3/8" = 1'-0" — 11

TA-1	RECESSED AUTOMATIC PAPER TOWEL DISPENSER AND WASTE RECEPTACLE (BOBRICK B-3974)
TA-2	SURFACE MOUNTED TOILET TISSUE DISPENSER (BOBRICK B-2892)
TA-3	COAT HOOK (BOBRICK B-212)
TA-4	SANITARY NAPKIN DISPOSAL (BOBRICK B-254)
TA-5	SURFACE MOUNTED TOILET SEAT COVER DISPENSER (BOBRICK B-221)
TA-6	FAUCET
TA-7	SURFACE MOUNTED SOAP DISPENSER (SLOAN SJS-1750)
TA-8	36" GRAB BAR (BOBRICK B-5806)
TA-9	42" GRAB BAR (BOBRICK B-5806)
TA-10	UNDERCOUNTER MOUNTED LAVATORY
TA-11	24" LONG SHELF (BOBRICK B-298)
TA-12	CONTINUOUS FRAMELESS MIRROR

NOTE: GRAB BAR STRUCTURAL STRENGTH AND MOUNTING DEVICE SHALL WITHSTAND MIN. 250 LBS. FORCE

TOILET ACCESSORIES — NO SCALE — 5

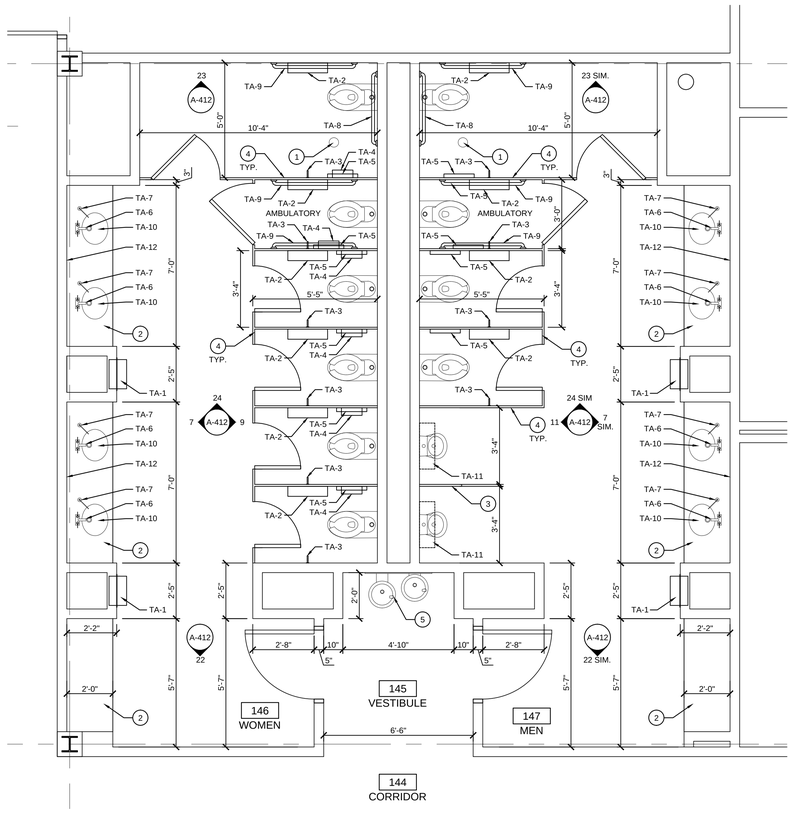

RESTROOMS 146 & 147 — 3/8" = 1'-0" — 7

1. ALL MANUFACTURERS AND MODEL NUMBERS ARE PROVIDED AS THE BASIS OF DESIGN. PERFORMANCE OF FINISHES SHALL MEET OR EXCEED SPECIFICATIONS.
2. REFER TO SHEET G-010 FOR MOUNTING HEIGHTS AND LOCATIONS OF ACCESSIBILITY FIXTURES.

GENERAL NOTES — NO SCALE — 1

1. FLOOR DRAIN, RE: PLUMBING
2. 34" HIGH SOLID SURFACE COUNTERTOP
3. 22" DEEP X 42" TALL STAINLESS STEEL URINAL PARTITION
4. BRADLEY SERIES 600 CEILING HUNG STAINLESS STEEL PARTITION
5. WALL MOUNTED ACCESSIBLE ELECTRIC DRINKING FOUNTAIN

SHEET KEYNOTES — NO SCALE — 2

HOUSTON AIRPORT SYSTEM

APPROVED

HOUSTON AIRPORT SYSTEM DIRECTOR OR DESIGNATED PDC REPRESENTATIVE — DATE

JACOBS

5985 Rogerdale Road
Houston, Texas
77072

P 832.351.6000
F 281.776.2501
W www.jacobs.com

TBPE Firm #2966

Seals:

THESE DOCUMENTS ARE FOR INTERIM REVIEW AND NOT FOR CONSTRUCTION, BIDDING OR PERMIT PURPOSES.

RESPONSIBLE ARCHITECT
CHRISTOPHER M. CASEY
24309
8-4-15

Project Client:
Houston Airport System
Project Address

Program Management Office

George Bush Intercontinental Airport (IAH)

115 Standifer St.
Humble, TX 77338

Number	Description	Date
	95% REVIEW OF BRIDGING DOCUMENTS	21 MAY 2015
	100% BRIDGING DOCUMENTS	4 AUG 2015

Key Plan

Project North

0 1 2 4 8
GRAPHIC SCALE: 3/8" = 1'-0"

Project No.:

Copyright: 2015 Jacobs Engineering

TDLR #:

Drawing Sheet Title:

ENLARGED FLOOR PLANS

Drawing Sheet Number:

A-401

Owner's Drawing Sheet No.:

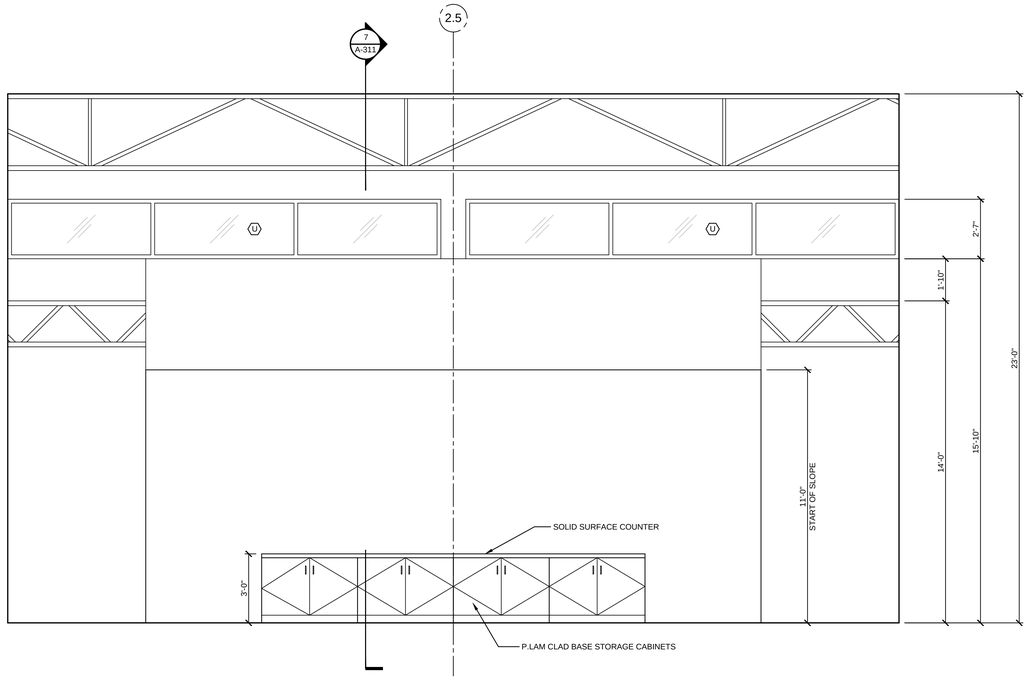

COPY 134 NORTH WALL

3/8" = 1'-0" **11**

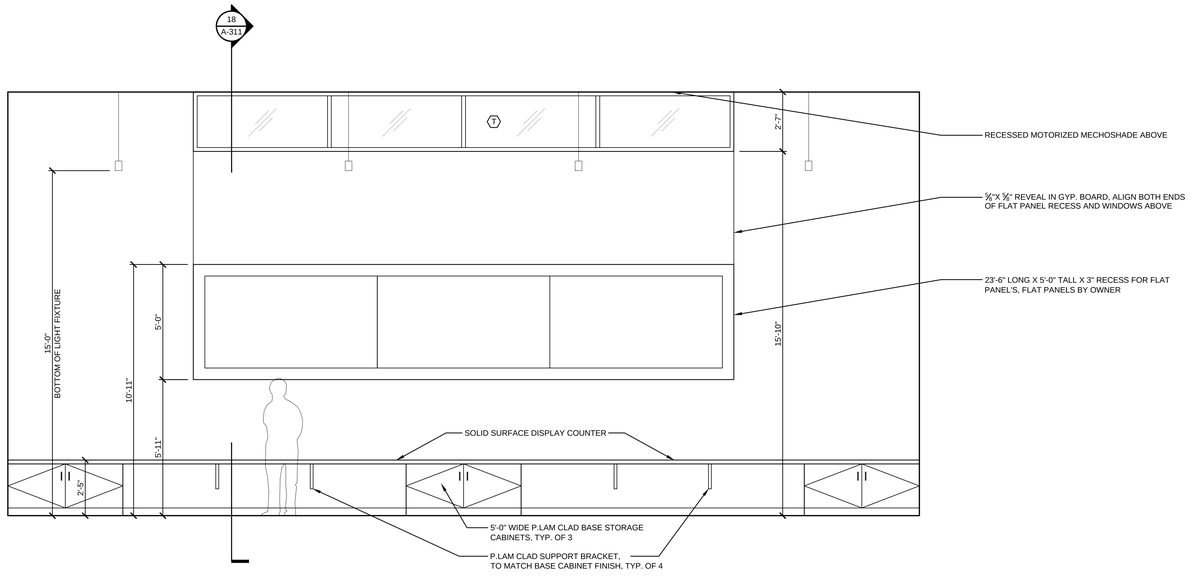

WAR ROOM NORTH WALL

3/8" = 1'-0" **7**

1. REFER TO A-602 FOR ROOM FINISH SCHEDULE.
2. REFER TO A-603 FOR MATERIALS LEGEND.
3. REFER TO A-604 FOR DOOR SCHEDULE AND TYPES.
4. REFER TO A-607 FOR WINDOW AND GLAZING TYPES AND SCHEDULES.

GENERAL NOTES

NO SCALE **1**

HOUSTON AIRPORT SYSTEM

APPROVED

HOUSTON AIRPORT SYSTEM DIRECTOR OR DESIGNATED PDC REPRESENTATIVE — DATE

JACOBS

5985 Rogerdale Road
Houston, Texas
77072

P 832.351.6000
F 281.776.2501
W www.jacobs.com

TBPE Firm #2966

Seals:

Project Client:

Houston Airport System

Project Address

Program Management Office

George Bush
Intercontinental Airport (IAH)

115 Standifer St.
Humble, TX 77338

Number	Description	Date
	95% REVIEW OF BRIDGING DOCUMENTS	21 MAY 2015
	100% BRIDGING DOCUMENTS	4 AUG 2015

Project No.:

Copyright: 2015 Jacobs Engineering

TDLR #:

Drawing Sheet Title:

INTERIOR ELEVATIONS

Drawing Sheet Number:

A-411

Owner's Drawing Sheet No.:

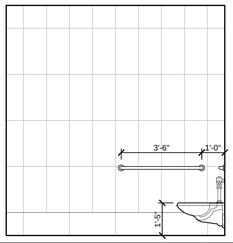

RR 109 NORTH WALL @ ADA STALL (RESTROOM 110 OPP. H.) 3/8" = 1'-0" **36**

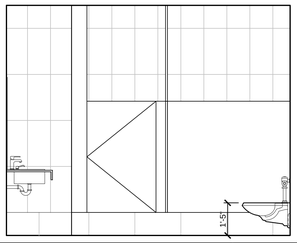

RESTROOM 109 NORTH WALL (RESTROOM 110 OPP. H.) 3/8" = 1'-0" **35**

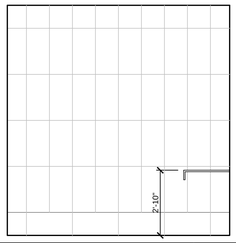

RESTROOM 109 SOUTH WALL (RESTROOM 110 OPP. H.) 3/8" = 1'-0" **34**

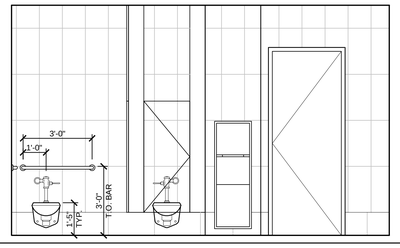

RESTROOM 109 EAST WALL 3/8" = 1'-0" **27**

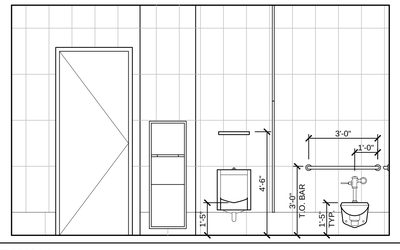

RESTROOM 110 WEST WALL 3/8" = 1'-0" **26**

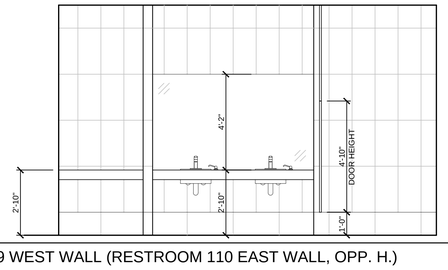

RESTROOM 109 WEST WALL (RESTROOM 110 EAST WALL, OPP. H.) 3/8" = 1'-0" **25**

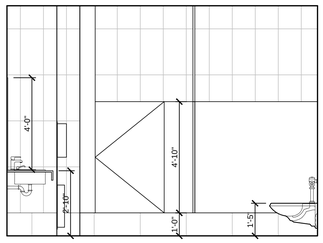

RESTROOM 146 NORTH WALL (RESTROOM 147 OPP. H.) 3/8" = 1'-0" **24**

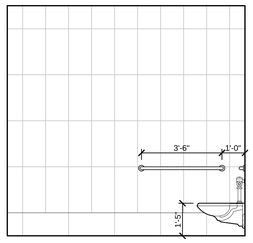

RR 146 NORTH WALL @ ADA STALL (RR 147 OPP. H.) 3/8" = 1'-0" **23**

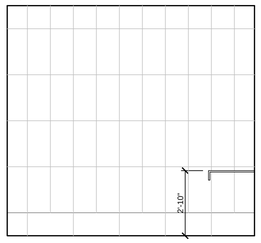

RESTROOM 146 SOUTH WALL (RESTROOM 147 OPP. H.) 3/8" = 1'-0" **22**

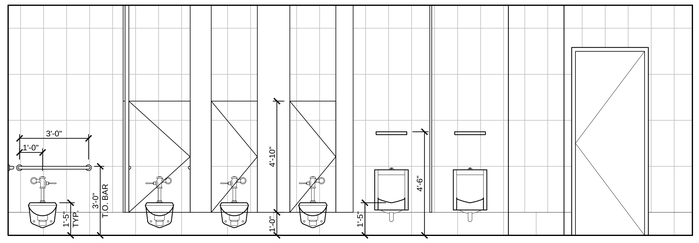

RESTROOM 147 WEST WALL 3/8" = 1'-0" **11**

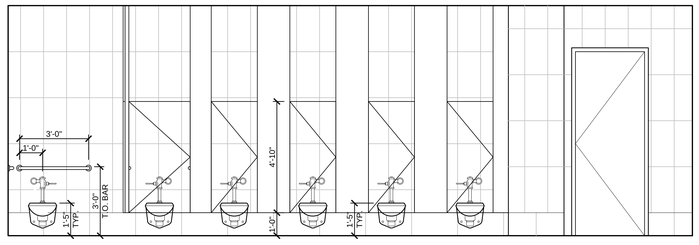

RESTROOM 146 EAST WALL 3/8" = 1'-0" **9**

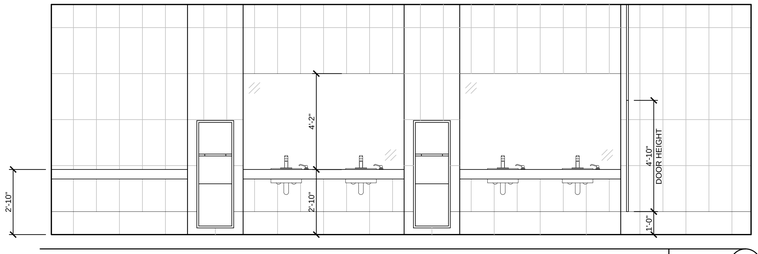

RESTROOM 146 WEST WALL (RESTROOM 147 EAST WALL, OPP. H.) 3/8" = 1'-0" **7**

1. REFER TO A-602 FOR ROOM FINISH SCHEDULE.
2. REFER TO A-603 FOR MATERIALS LEGEND.
3. REFER TO A-604 FOR DOOR SCHEDULE AND TYPES.
4. REFER TO A-607 FOR WINDOW AND GLAZING TYPES AND SCHEDULES.

GENERAL NOTES NO SCALE **1**

HOUSTON AIRPORT SYSTEM

APPROVED

HOUSTON AIRPORT SYSTEM DIRECTOR OR DESIGNATED PDC REPRESENTATIVE — DATE

JACOBS

5985 Rogerdale Road
Houston, Texas
77072

P 832.351.6000
F 281.776.2501
W www.jacobs.com

TBPE Firm #2966

Seals:

THESE DOCUMENTS ARE FOR INTERIM REVIEW AND NOT FOR CONSTRUCTION, BIDDING OR PERMIT PURPOSES.

RESPONSIBLE ARCHITECT
CHRISTOPHER M. CASEY
24309
8-4-15

Project Client:
Houston Airport System
Project Address

Program Management Office

George Bush Intercontinental Airport (IAH)

115 Standifer St.
Humble, TX 77338

Number	Description	Date
	95% REVIEW OF BRIDGING DOCUMENTS	21 MAY 2015
	100% BRIDGING DOCUMENTS	4 AUG 2015

Project No.:

Copyright: 2015 Jacobs Engineering

TDLR #:

Drawing Sheet Title:

INTERIOR ELEVATIONS

Drawing Sheet Number:

A-412

Owner's Drawing Sheet No.:

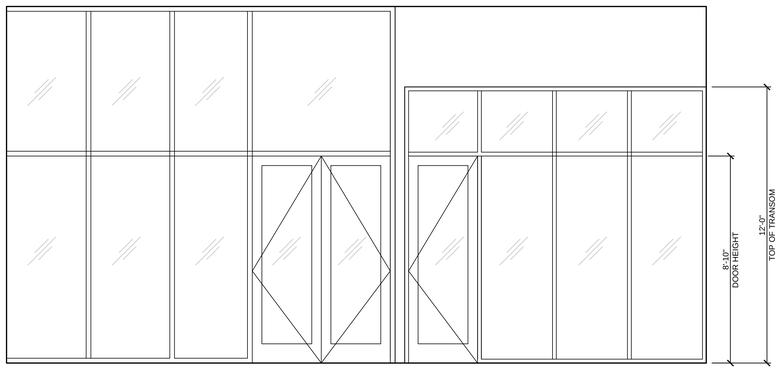

RECEPTION SOUTH WALL 3/8" = 1'-0" 28

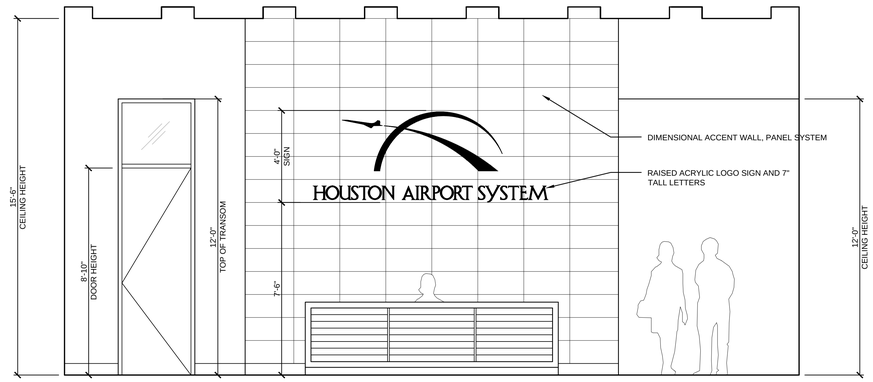

RECEPTION NORTH WALL 3/8" = 1'-0" 10

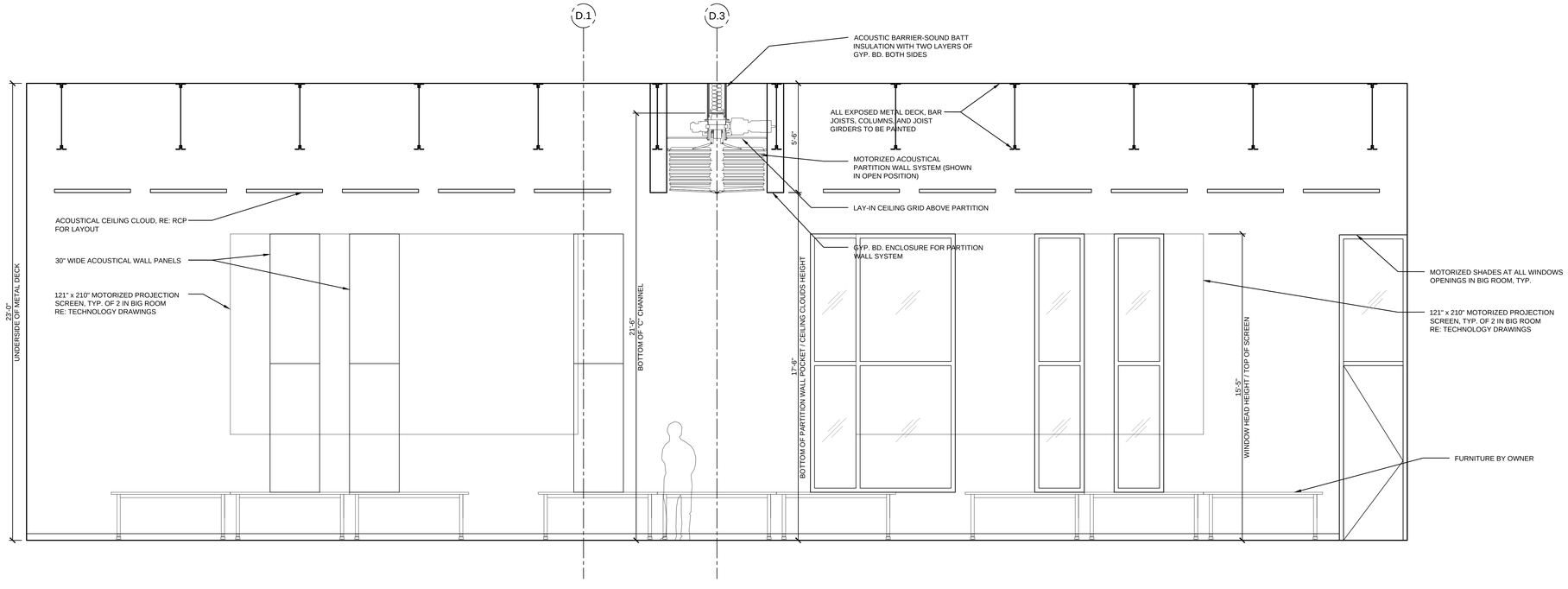

BIG ROOM EAST WALL 3/8" = 1'-0" 7

1. REFER TO A-602 FOR ROOM FINISH SCHEDULE.
2. REFER TO A-603 FOR MATERIALS LEGEND.
3. REFER TO A-604 FOR DOOR SCHEDULE AND TYPES.
4. REFER TO A-607 FOR WINDOW AND GLAZING TYPES AND SCHEDULES.

GENERAL NOTES NO SCALE 1

HOUSTON AIRPORT SYSTEM

APPROVED

HOUSTON AIRPORT SYSTEM DIRECTOR OR DESIGNATED PDC REPRESENTATIVE — DATE

JACOBS

5985 Rogerdale Road
Houston, Texas
77072

P 832.351.6000
F 281.776.2501
W www.jacobs.com

TBPE Firm #2966

Seals:

THESE DOCUMENTS ARE FOR INTERIM REVIEW AND NOT FOR CONSTRUCTION, BIDDING OR PERMIT PURPOSES.

RESPONSIBLE ARCHITECT
CHRISTOPHER M. CASEY
24309
8-4-15

Project Client:
Houston Airport System
Project Address

Program Management Office

George Bush Intercontinental Airport (IAH)

115 Standifer St.
Humble, TX 77338

Number	Description	Date
	95% REVIEW OF BRIDGING DOCUMENTS	21 MAY 2015
	100% BRIDGING DOCUMENTS	4 AUG 2015

Project No.:

Copyright: 2015 Jacobs Engineering

TDLR #:

Drawing Sheet Title:

INTERIOR ELEVATIONS

Drawing Sheet Number:

A-413

Owner's Drawing Sheet No.:

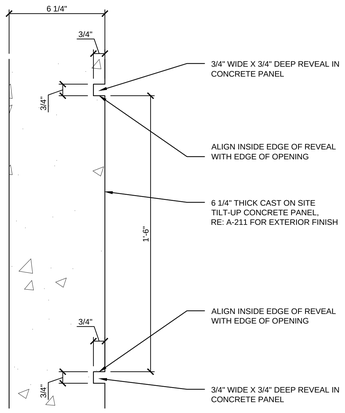

VERTICAL REVEALS BETWEEN WINDOWS (CONC.) 3" = 1'-0" 15

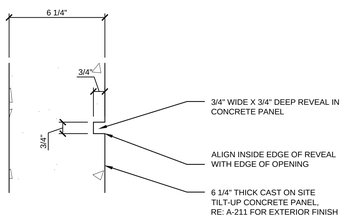

TYP. VERTICAL REVEAL (CONC.) 3" = 1'-0" 14

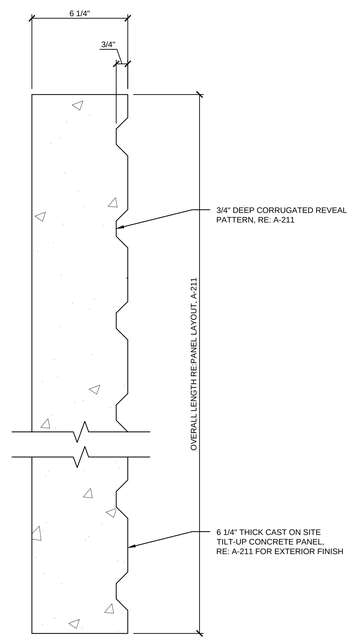

CORRUGATED REVEL PATTERN 3" = 1'-0" 8

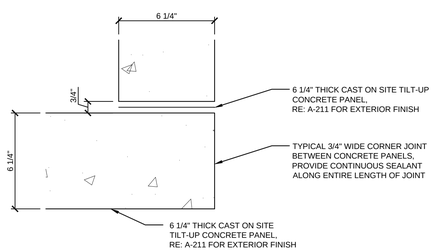

CONCRETE PANEL CORNER JOINT 3" = 1'-0" 25

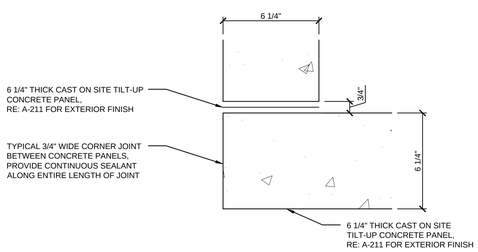

CONCRETE PANEL CORNER JOINT 3" = 1'-0" 13

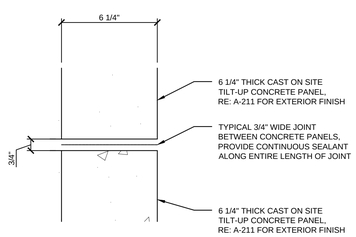

TYP. CONC. PANEL JOINT 3" = 1'-0" 7

1. REFER TO A-211 FOR TILT WALL PANEL LAYOUT AND TYPES.
2. REFER TO A-312 FOR TILT WALL SECTIONS.
3. FIELD VERIFY ALL EXISTING SLAB DIMENSIONS PRIOR TO FABRICATION

GENERAL NOTES NO SCALE 1

HOUSTON AIRPORT SYSTEM

APPROVED

HOUSTON AIRPORT SYSTEM DIRECTOR OR DESIGNATED PDC REPRESENTATIVE — DATE

JACOBS

5985 Rogerdale Road
Houston, Texas
77072

P 832.351.6000
F 281.776.2501
W www.jacobs.com

TBPE Firm #2966

Seals:

THESE DOCUMENTS ARE FOR INTERIM REVIEW AND NOT FOR CONSTRUCTION, BIDDING OR PERMIT PURPOSES.

RESPONSIBLE ARCHITECT
CHRISTOPHER M. CASEY
24309
8-4-15

Project Client:
Houston Airport System
Project Address

Program Management Office

George Bush Intercontinental Airport (IAH)

115 Standifer St.
Humble, TX 77338

Number	Description	Date
	95% REVIEW OF BRIDGING DOCUMENTS	21 MAY 2015
	100% BRIDGING DOCUMENTS	4 AUG 2015

0 16 32 48
GRAPHIC SCALE: 1/16"=1'-0"

Project No.:

Copyright: 2015 Jacobs Engineering

TDLR #:

Drawing Sheet Title:

PLAN DETAILS

Drawing Sheet Number:

A-501

Owner's Drawing Sheet No.:

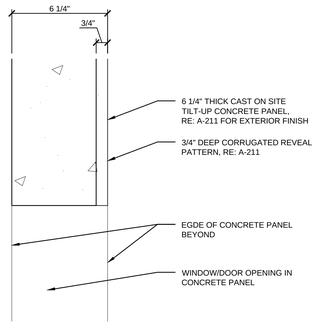

CONC. PANEL HIGH CORR. REVEAL PATTERN AT OPENING | 3" = 1'-0" | 17

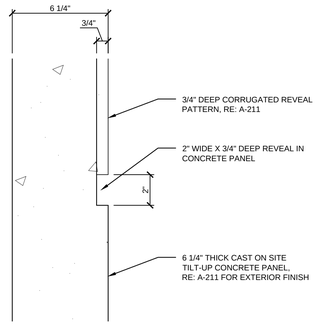

CONC. PANEL HORIZONTAL REVEAL AT HIGH CORR. REVEAL PATTERN | 3" = 1'-0" | 11

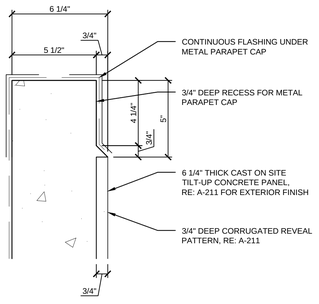

CONC. PANEL PARAPET AT HIGH CORR. REVEAL PATTERN | 3" = 1'-0" | 15

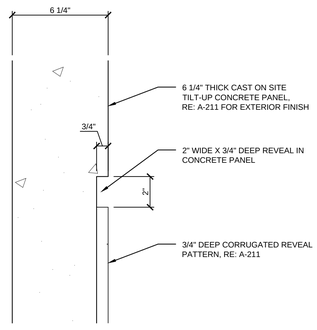

CONC, PANEL HORIZONTAL REVEAL AT LOW CORR. REVEAL PATTERN | 3" = 1'-0" | 9

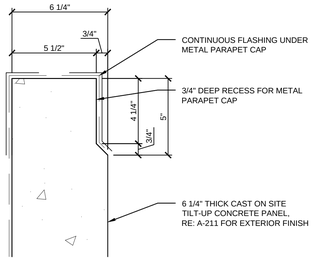

TYP. CONC. PANEL PARAPET | 3" = 1'-0" | 13

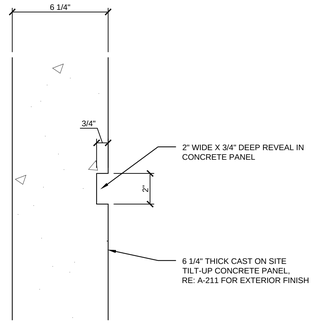

TYP. CONC. PANEL HORIZONTAL REVEAL | 3" = 1'-0" | 7

1. REFER TO A-211 FOR TILT WALL PANEL LAYOUT AND TYPES.
2. REFER TO A-312 FOR TILT WALL SECTIONS.
3. FIELD VERIFY ALL EXISTING SLAB DIMENSIONS PRIOR TO FABRICATION

GENERAL NOTES | NO SCALE | 1

HOUSTON AIRPORT SYSTEM

APPROVED

HOUSTON AIRPORT SYSTEM
DIRECTOR OR DESIGNATED
PDC REPRESENTATIVE

DATE

JACOBS

5985 Rogerdale Road
Houston, Texas
77072

P 832.351.6000
F 281.776.2501
W www.jacobs.com

TBPE Firm #2966

Seals:

THESE DOCUMENTS ARE FOR INTERIM REVIEW AND NOT FOR CONSTRUCTION, BIDDING OR PERMIT PURPOSES.

RESPONSIBLE ARCHITECT
CHRISTOPHER M. CASEY
24309

8-4-15

Project Client:

Houston Airport System

Project Address

Program Management Office

George Bush
Intercontinental Airport (IAH)

115 Standifer St.
Humble, TX 77338

Number	Description	Date
	95% REVIEW OF BRIDGING DOCUMENTS	21 MAY 2015
	100% BRIDGING DOCUMENTS	4 AUG 2015

0 16 32 48
GRAPHIC SCALE: 1/16" = 1'-0"

Project No.:

Copyright: 2015 Jacobs Engineering

TDLR #:

Drawing Sheet Title:

SECTION DETAILS

Drawing Sheet Number:

A-511

Owner's Drawing Sheet No.:

ROOM		FLOOR		WALLS					CEILING		REMARKS
NO.	SPACE NAME	MAT'L	BASE	ALL	NORTH	SOUTH	EAST	WEST	MAT'L	HEIGHT	
100	ENTRY VESTIBULE	PT-1	PT-4	-	PG-3	GL-2	GL-1	GL-2	PG-1	RE: A-121	
101	RECEPTION	PT-1	PT-4	-	3DP-1/PG-2, RE: 11/A-413	GL-2	PG-2/GL-1	PG-3/GL-1	PG-1	RE: A-121	
102	CONFERENCE ROOM 1	CP-1	RB-1	-	PG-2	PG-2	PG-2/GL-1	PG-2/GL-3	ACT-1	12'-0"	
103	WORK ROOM	CP-1	RB-1	PG-2	-	-	-	-	ACT-1	10'-0"	
104	BIG ROOM	CP-1	RB-1	-	PG-2	PG-2	PG-2/AP-3, RE: 7/A-413	PG-2/GL-1	RE: A-121	RE: A-121	
105	ELECTRICAL ROOM	CON-1	RB-1	PG-2	-	-	-	-	OTS-1	-	
106	CORRIDOR	PT-1	PT-4	-	PG-2	PG-2	PG-2/GL-1	3DP-1/PG-2	ACT-1	12'-0"	
107	CORRIDOR	PT-1	PT-4	PG-2	-	-	-	-	ACT-1	12'-0"	
108	JANITOR CLOSET	CON-1	RB-1	PG-2	-	-	-	-	OTS-1	-	
109	WOMEN'S RESTROOM	PT-2	PT-3	CT-1	-	-	-	-	PG-1	10'-0"	
110	MEN'S RESTROOM	PT-2	PT-3	CT-1	-	-	-	-	PG-1	10'-0"	
111	CORRIDOR	LVT-1	RB-1						ACT-1	10'-0"	
112	WAR ROOM	CP-1	RB-1	-	PG-3	PG-2	PG-2	PG-2	ACT-1	18'-6"	
113	WAR ROOM STORAGE	CON-1	RB-1	PG-2	-	-	-	-	ACT-1	10'-0"	
114	BUILDING STORAGE	CON-1	RB-1	PG-2	-	-	-	-	OTS-1	-	
115	FIRE RISER ROOM	CON-1	RB-1	PG-2	-	-	-	-	OTS-1	-	
116	DOCUMENT CONTROL	LVT-1	RB-1	PG-2	-	-	-	-	ACT-1	11'-0"	
117	MAIL ROOM	LVT-1	RB-1	PG-2	-	-	-	-	ACT-1	11'-0"	
118	CORRIDOR	LVT-1	RB-1						OTS-1	-	
119	CORRIDOR	CP-1	RB-1	-	-	-	PG-2	PG-2	ACT-1	10'-0"	
120	OFFICE 4	CP-1	RB-1	-	GL-1	PG-2	PG-2	PG-2	ACT-1	10'-0"	
121	OFFICE 3	CP-1	RB-1	-	GL-1	PG-2	PG-2	PG-2	ACT-1	10'-0"	
122	EXECUTIVE OFFICE 2	CP-1	RB-1	-	PG-2/GL-1	PG-2	PG-2	PG-2	ACT-1	10'-0"	
123	EXECUTIVE OFFICE 1	CP-1	RB-1	-	PG-2	PG-2	GL-1	PG-2	ACT-1	10'-0"	
124	OFFICE 2	CP-1	RB-1	-	PG-2	PG-2	GL-1	PG-2	ACT-1	10'-0"	
125	OFFICE 1	CP-1	RB-1	-	PG-2	PG-2	GL-1	PG-2	ACT-1	10'-0"	
126	CORRIDOR	CP-1	RB-1	-	PG-2/GL-1	PG-2	-	-	ACT-1	10'-0"	
127	UNITED FILES	CP-1	RB-1	-	PG-2	PG-2	GL-1	PG-2/GL-1	ACT-1	10'-0"	
128	UNITED OFFICE 2	CP-1	RB-1	-	PG-2	PG-2	GL-1	PG-2	ACT-1	10'-0"	
129	UNITED OFFICE 1	CP-1	RB-1	-	PG-2	PG-2	GL-1	PG-2	ACT-1	10'-0"	
130	OFFICE AREA 1	CP-1	RB-1						OTS-1	-	RE: A-121 FOR LOCATIONS OF ACOUSTICAL PANELS
131	RECEPTION	CP-1	RB-1						OTS-1	-	RE: A-121 FOR LOCATIONS OF ACOUSTICAL PANELS
132	RECEPTION	CP-1	RB-1	-	GL-1	PG-2	PG-2	GL-1	ACT-1	10'-0"	
133	RECEPTION	CP-1	RB-1	-	GL-1	PG-2	GL-1	PG-2	ACT-1	10'-0"	
134	COPY AREA	CP-1	RB-1	-	PG-2	PG-2/GL-1	GL-1	GL-1	OTS-1	-	
135	UNITED OFFICE 3	CP-1	RB-1	-	PG-2	PG-2	PG-2	GL-1	ACT-1	10'-0"	
136	UNITED OFFICE 4	CP-1	RB-1	-	PG-2	PG-2	PG-2	GL-1	ACT-1	10'-0"	
137	UNITED OFFICE 5	CP-1	RB-1	-	PG-2	GL-1	PG-2	GL-1	ACT-1	10'-0"	
138	CORRIDOR	CP-1	RB-1	-	PG-2/GL-1	PG-2	-	-	ACT-1	10'-0"	
139	OFFICE 5	CP-1	RB-1	-	PG-2	PG-2	GL-1	GL-1	ACT-1	10'-0"	
140	OFFICE 6	CP-1	RB-1	-	PG-2	PG-2	GL-1	GL-1	ACT-1	10'-0"	
141	EXECUTIVE OFFICE 3	CP-1	RB-1	-	PG-2	PG-2	PG-2/GL-1	GL-1	ACT-1	10'-0"	
142	EXECUTIVE OFFICE 4	CP-1	RB-1	-	PG-2/GL-1	PG-2	PG-2/GL-1	PG-2	ACT-1	10'-0"	
143	CORRIDOR	LVT-1	RB-1						OTS-1	-	
144	CORRIDOR	LVT-1	RB-1						OTS-1	-	
145	VESTIBULE	LVT-1	RB-1						OTS-1	-	
146	WOMEN'S RESTROOM	PT-2	PT-3	CT-1	-	-	-	-	PG-1	10'-0"	
147	MEN'S RESTROOM	PT-2	PT-3	CT-1	-	-	-	-	PG-1	10'-0"	
148	ELECTRICAL ROOM	CON-1	RB-1	PG-2	-	-	-	-	OTS-1	-	
149	UNITED IDF	CON-1	RB-1	PG-2	-	-	-	-	OTS-1	-	
150	MDF	CON-1	RB-1	PG-2	-	-	-	-	OTS-1	-	
151	MECHANICAL ROOM	CON-1	RB-1	PG-2	-	-	-	-	OTS-1	-	
152	OFFICE 7	CP-1	RB-1	-	PG-2	PG-2	PG-2/GL-1	PG-2	ACT-1	10'-0"	
153	OFFICE 8	CP-1	RB-1	-	PG-2	PG-2	PG-2/GL-1	PG-2	ACT-1	10'-0"	
154	OFFICE 9	CP-1	RB-1	-	PG-2	PG-2	PG-2/GL-1	PG-2	ACT-1	10'-0"	
155	OFFICE 10	CP-1	RB-1	-	PG-2	PG-2	PG-2/GL-1	PG-2	ACT-1	10'-0"	
156	COPY ROOM	CP-1	RB-1	-	PG-2	PG-2	PG-2/GL-1	PG-2	ACT-1	10'-0"	
157	CONFERENCE ROOM 2	CP-1	RB-1	-	PG-2	PG-2	PG-2/GL-1	GL-2	ACT-1	14'-0"	
158	BREAK ROOM	LVT-1	RB-1					GL-2	OTS-1	-	
159	COURTYARD	PV-1	-	-	-	-	-	-	-	-	
160	OFFICE AREA 2	CP-1	RB-1						OTS-1	-	RE: A-121 FOR LOCATIONS OF ACOUSTICAL PANELS
161	OFFICE AREA 3	CP-1	RB-1						OTS-1	-	RE: A-121 FOR LOCATIONS OF ACOUSTICAL PANELS
162	OFFICE AREA 4	CP-1	RB-1						OTS-1	-	RE: A-121 FOR LOCATIONS OF ACOUSTICAL PANELS
163	COPY AREA	LVT-1	RB-1						OTS-1	-	
164	COFFEE BAR	LVT-1	RB-1						OTS-1	-	RE: A-121 FOR LOCATIONS OF ACOUSTICAL PANELS
165	HUDDLE AREA	LVT-1	RB-1						OTS-1	-	RE: A-121 FOR LOCATIONS OF ACOUSTICAL PANELS
166	HUDDLE ROOM 3	CP-1	RB-1	-	GL-1	PG-2	GL-1	PG-2	ACT-1	10'-0"	
167	HUDDLE ROOM 2	CP-1	RB-1	-	GL-1	PG-2	PG-2	GL-1	ACT-1	10'-0"	
168	COPY AREA	CP-1	RB-1						OTS-1	-	
169	WALKWAY	LVT-1	RB-1						OTS-1	-	

ROOM FINIISH SCHEDULE

NO SCALE 7

FLOOR FINISHES

ATH	ATHLETIC RUBBER FLOORING
CON	CONCRETE
CT	CERAMIC TILE
CP	CARPET
LVT	LUXURY VINYL TILE
PT	PORCELAIN TILE
QT	QUARRY TILE
SS	STAINLESS STEEL
TRZ	TERRAZZO
VCT	VINYL COMPOSITION TILE

BASE FINISHES

CT	CERAMIC TILE
PT	PORCELAIN TILE
QT	QUARRY TILE
RB	RUBBER BASE
SS	STAINLESS STEEL

WALL FINISHES

CT	CERAMIC TILE
FRP	FIBER REINFORCED PANEL
PG	PAINTED GYPSUM BOARD
PL	PLASTIC LAMINATE
PT	PORCELAIN TILE
MT	MOSAIC TILE
MP	METAL PANEL
ST	STONE
WC	WALL COVERING
WD	WOOD VENEER

CEILING FINISHES

ACT	ACOUSTICAL CEILING TILES
AP	ACOUSTICAL PANELS
LP	LATH & PLASTER CEILING
PG	PAINTED GYPSUM BOARD
SG	SUSPENDED GYPSUM SYSTEM
OTS	OPEN TO STRUCTURE

PAINT FINISHES

P	PAINT
AG	ANTI-GRAFFITI SEALER

MILLWORK FINISHES

PL	PLASTIC LAMINATE
SF	SOLID SURFACE
SS	STAINLESS STEEL
ST	STONE

MISC. FINISHES

FB	FABRIC

ABBREVIATIONS

NO SCALE 3

1. REFER TO A-131 FOR FLOOR FINISH LOCATIONS
2. REFER TO A-121 FOR CEILING FINISH LOCATIONS
3. REFER TO A-603 FOR FINISH LEGEND
4. REFER TO A-607 FOR GLAZING & WINDOW TYPES
5. CONTRACTOR SHALL COORDINATE ALL FINISH WORK AND PROVIDE A CONSTRUCTION SCHEDULE TO THE OWNER INDICATING PROPOSED INSTALLATION DATES OF ALL ITEMS.
6. ALL EXPOSED COLUMNS, PANEL BOXES, CONDUITS, SURFACE RUNWAYS, ETC.,THAT ARE NOT PREFINISHED SHALL MATCH ADJACENT PARTITION OR CEILING COLOR, UNLESS NOTED OTHERWISE.
7. ALL TILE GROUT AND UNGLAZED TILE SHALL BE SEALED.
8. MANUFACTURERS LISTED ON THE FINISH LEGEND ESTABLISH THE QUALITY, TYPE, AND COLOR. OTHER MANUFACTURERS LISTED IN THE SPECIFICATIONS OFFERING EQUAL QUALITIES WILL BE CONSIDERED.
9. CONTRACTOR SHALL PROVIDE SAMPLES TO THE ARCHITECT FOR FINAL APPROVALPRIOR TO ORDERING AND INSTALLATION.
10. INTERIOR WALL AND CEILING FINISHES SHALL COMPLY WITH THE FOLLOWING PER THE 2006 IBC, TABLE 803.5 FOR SPRINKLERED BUILDINGS:
    - 10.1. OCCUPANCY TYPE B
    - 10.1.1. CLASS B - VERITCAL EXITS AND EXIT PASSAGEWAYS
    - 10.1.2. CLASS C - EXIT ACCESS CORRIDORS AND OTHER EXITWAYS
    - 10.1.3. CLASS C - ROOMS AND ENCLOSED SPACES
11. ALL SPECIFIED MANUFACTURERS AND MODEL NUMBERS ARE PROVIDED AS THE BASIS OF DESIGN. PERFORMANCE OF FINISHES SHALL MEET OR EXCEED SPECIFICATIONS.

GENERAL NOTES

NO SCALE 1

HOUSTON AIRPORT SYSTEM

APPROVED

HOUSTON AIRPORT SYSTEM DIRECTOR OR DESIGNATED PDC REPRESENTATIVE — DATE

JACOBS

5985 Rogerdale Road
Houston, Texas
77072

P 832.351.6000
F 281.776.2501
W www.jacobs.com

TBPE Firm #2966

Seals:

THESE DOCUMENTS ARE FOR INTERIM REVIEW AND NOT FOR CONSTRUCTION, BIDDING OR PERMIT PURPOSES.

RESPONSIBLE ARCHITECT
CHRISTOPHER M. CASEY
24309
8-4-15

Project Client:
Houston Airport System
Project Address

Program Management Office

George Bush Intercontinental Airport (IAH)

115 Standifer St.
Humble, TX 77338

Number	Description	Date
	95% REVIEW OF BRIDGING DOCUMENTS	21 MAY 2015
	100% BRIDGING DOCUMENTS	4 AUG 2015

Project No.:

Copyright: 2015 Jacobs Engineering

TDLR #:

Drawing Sheet Title:

ROOM FINISH SCHEDULE

Drawing Sheet Number:

A-602

Owner's Drawing Sheet No.:
-

	LOCATION	TYPE	MANUFACTURER	SERIES	FINISH	COLOR	SIZE	SETTING BED	GROUT	REMARKS	CONTACT
FLOOR FINISHES											
CP-1	OFFICES, WORKSTATION AREAS, CONFERENCE ROOMS, BIG ROOM, WAR ROOM	CARPET	MILLIKEN	FAHRENHEIT	-	WAVE - TUNDRA (WAV62-71-5)	25 CM X 1 M	-	-	HERRINGBONE PATTERN	RICK SHIMAITIS (713.824.1798)
LVT-1	CORRIDORS/WALKWAYS, BREAK ROOM, COFFEE BAR, DOCUMENT CONTROL, MAIL ROOM	VINYL COMPOSITION TILE	POLYFLOR	EXPONA STONE & EFFECT	-	LIGHT GREY CONCRETE 5067	24" X 24" X 2.5 MM	-	-	-	JORGE PORTILLA (713.812.9022)
PT-1	RECEPTION, ENTRY VESTIBULE	PORCELAIN TILE	DALTILE	EC1	TEXTURED	J104 CITY	24" X 48"	THIN SET	SUBMIT SAMPLES FOR SELECTION	THROUGH BODY COLOR, RECTIFIED EDGE	JIM HODGES (281.481.5893)
PT-2	RESTROOMS	PORCELAIN TILE	DALTILE	EC1	TEXTURED	J104 CITY	24" X 48"	THIN SET	SUBMIT SAMPLES FOR SELECTION	THROUGH BODY COLOR, RECTIFIED EDGE	JIM HODGES (281.481.5893)
CON-1	STORAGE, MDF, MECHANICAL, ELECTRICAL, JANITOR, FIRE RISER	FINISHED CONCRETE									
WALL FINISHES											
PG-2	TYPICAL	PAINTED GYPSUM BOARD	BEHR	-	-	PAINTER'S WHITE PPU18-8	-	-	-	-	-
PG-3	ACCENT WALLS	PAINTED GYPSUM BOARD	GLIDDEN	-	-	CALEDON HILLS G47 30GY 51/294	-	-	-	-	-
CT-1	RESTROOMS	CERAMIC TILE	DALTILE	SHOWSCAPE	REVERSE DOT	SOFT GRAY SH11	12" X 24"	THIN SET	SUBMIT SAMPLES FOR SELECTION	-	JIM HODGES (281.481.5893)
3DP-1	RECEPTION FEATURE WALLS	3-DIMENSIONAL WALL PANEL	MODULARARTS	INTERLOCKINGROCK PANELS	SLATER	WHITE	-	-	-	-	-
MT-1	BACKSPLASHES AT BREAK ROOM, COFFEE BAR	MOSAIC WALL TILE	DALTILE	METALLICA	-	BRUSHED STAINLESS STEEL SS50	3/4" X 3/4" PENNY ROUND MOSAIC	THIN SET	SUBMIT SAMPLES FOR SELECTION	-	JIM HODGES (281.481.5893)
AP-4	BIG ROOM EAST WALL	ACOUSTICAL WALL PANEL				COLOR TO MATCH FB-2		-	-	LAYOUT TO MIRROR WINDOW LOCATIONS	
WALL BASES											
RB-1	TYPICAL	RUBBER WALL BASE	JOHNSONITE	TRADITIONAL WALL BASE	-	199 DOCKSIDE WG	4" TALL	-	-	-	-
PT-3	RESTROOMS	PORCELAIN TILE WALL BASE	DALTILE					THIN SET	SUBMIT SAMPLES FOR SELECTION		JIM HODGES (281.481.5893)
PT-4	RECEPTION, ENTRY VESTIBULE	PORCELAIN TILE WALL BASE	DALTILE				6" TALL	THIN SET	SUBMIT SAMPLES FOR SELECTION		JIM HODGES (281.481.5893)
CEILING FINISHES											
OTS-1	EXPOSED STRUCTURE AND ROOF DECK	PAINTED STEEL	BEHR	-		PAINTER'S WHITE PPU18-8	-	-	-	-	-
PG-1	RECEPTION, ENTRY VESTIBULE, BIG ROOM, COUNTERTOP RECESSES, RESTROOMS	PAINTED GYPSUM BOARD	BEHR	-		PAINTER'S WHITE PPU18-8	-	-	-	-	-
ACT-1	OFFICES, CONFERENCE ROOMS, WAR ROOM, WORK ROOMS, DOCUMENT CONTROL, MAIL ROOM	ACOUSTICAL CEILING TILE AND GRID	ARMSTRONG	ULTIMATA BEVELED TEGULAR	-	WHITE	24" X 24"	-	-	-	JAMIE BILLINGS (281.358.3568)
AP-1	LOW CEILING WORKSTATION AREAS	SUSPENDED ACOUSTICAL PANEL	ARMSTRONG	SOUNDSCAPES BLADES	-	CUSTOM YELLOW TO MATCH GLIDDEN SPICY BANANA PEPPER 50YY 60/538	10" TALL X 94" LONG X 2" THICK	-	-	VERTICAL PANEL, MATCH COLOR TO FURNITURE YELLOW	JAMIE BILLINGS (281.358.3568)
AP-2	BIG ROOM	SUSPENDED ACOUSTICAL PANEL	ARMSTRONG	SOUNDSCAPES SHAPES	-	WHITE	#5444 HEXAGON	-	-	-	JAMIE BILLINGS (281.358.3568)
AP-3	HIGH CEILING WORKSTATION AREA, COFFEE BAR	SUSPENDED ACOUSTICAL PANEL	ARMSTRONG	SOUNDSCAPES BLADES	-	CUSTOM YELLOW TO MATCH GLIDDEN SPICY BANANA PEPPER 50YY 60/538	10" TALL X 94" LONG X 2" THICK	-	-	VERTICAL PANEL, MATCH COLOR TO FURNITURE YELLOW	JAMIE BILLINGS (281.358.3568)
MILLWORK FINISHES											
PL-1	TYPICAL CABINET/STORAGE, SOLID DOORS	PLASTIC LAMINATE	WILSONART	TYPE 335	-	7966 5TH AVE. ELM	-	-	-	-	-
PL-2	COUNTERTOPS AT WORK ROOMS, COPY AREA, MAIL ROOM, DOCUMENT CONTROL	PLASTIC LAMINATE	WILSONART	TYPE 107	-	D354 DESIGNER WHITE	-	-	-	-	-
SF-1	COUNTERTOPS AT COFFEE BAR, BREAK ROOM, WAR ROOM, CONFERENCE ROOMS	SOLID SURFACE	OKITE	COLLEZIONE VENATI	POLISHED	1896 BIANCO CARRARA	3/4" THICK	-	-	-	MIKE BOYD (713.849.3800)
SF-2	COUNTERTOPS AT RESTROOMS	SOLID SURFACE	OKITE	COLLEZIONE VENATI	POLISHED	1896 BIANCO CARRARA	3/4" THICK	-	-	-	MIKE BOYD (713.849.3800)
SS-1	TOILET PARTITIONS	STAINLESS STEEL	BRADLEY	-	TEXTURED	POLISHED STAINLESS STEEL	-	-	-	-	-
MISC. FINISHES											
AL-1	ALUMINUM DOORS	CLEAR ANODIZED ALUMINUM	KAWNEER	-	-	CLEAR ANODIZED	-	-	-	-	-
FB-1	NON-BLACKOUT WINDOW SHADES	WINDOW SHADE FABRIC	MERMET	A SCREEN 14%	-	30.20 CHARCOAL/LINEN	-	-	-	-	-
FB-2	BLACKOUT WINDOW SHADES	WINDOW SHADE FABRIC (BLACKOUT)	MERMET	AVILA TWILIGHT	-	00.01 SLATE GREY	-	-	-	-	-
PL-3	WORKSTATION STORAGE UNIT INSET PANELS	PLASTIC				YELLOW TO MATCH GLIDDEN SPICY BANANA PEPPER 50YY 60/538	-	-	-	REFER TO INTERIOR RENDERINGS	-
EXTERIOR FINISHES											
MP-1	METAL PANEL FIELD COLOR	NON-INSULATED METAL WALL PANEL	MBCI	SHADOWRIB	EMBOSSED	SIGNATURE 200 SOLAR WHITE	16" WIDE PANEL	-	-	CONCEALED FASTENING	STEVE SHELTON (281.445.8555)
MP-2	METAL PANEL ACCENT COLOR	NON-INSULATED METAL WALL PANEL	MBCI	SHADOWRIB	EMBOSSED	SIGNATURE 200 ASH GRAY	16" WIDE PANEL	-	-	CONCEALED FASTENING	STEVE SHELTON (281.445.8555)
MP-3	TYPICAL SOFFIT	NON-INSULATED METAL WALL PANEL	MBCI	SHADOWRIB	EMBOSSED	SIGNATURE 200 SOLAR WHITE	16" WIDE PANEL	-	-	CONCEALED FASTENING	STEVE SHELTON (281.445.8555)
PV-1	COURTYARD	CONCRETE PAVERS	PAVESTONE	VERONA SERIES	-		3" X 18"	-	-	HERRINGBONE PATTERN	-
CON-2	TILT WALL PANELS	FINISHED CONCRETE									
CON-3	TILT WALL PANELS	PAINTED CONCRETE									

FINISH LEGEND

NO SCALE 7

FLOOR FINISHES

ATH	ATHLETIC RUBBER FLOORING
CON	CONCRETE
CT	CERAMIC TILE
CP	CARPET
LVT	LUXURY VINYL TILE
PT	PORCELAIN TILE
QT	QUARRY TILE
SS	STAINLESS STEEL
TRZ	TERRAZZO
VCT	VINYL COMPOSITION TILE

BASE FINISHES

CT	CERAMIC TILE
PT	PORCELAIN TILE
QT	QUARRY TILE
RB	RUBBER BASE
SS	STAINLESS STEEL

WALL FINISHES

CT	CERAMIC TILE
FRP	FIBER REINFORCED PANEL
PG	PAINTED GYPSUM BOARD
PL	PLASTIC LAMINATE
PT	PORCELAIN TILE
MT	MOSAIC TILE
MP	METAL PANEL
ST	STONE
WC	WALL COVERING
WD	WOOD VENEER

CEILING FINISHES

ACT	ACOUSTICAL CEILING TILES
AP	ACOUSTICAL PANELS
LP	LATH & PLASTER CEILING
PG	PAINTED GYPSUM BOARD
SG	SUSPENDED GYPSUM SYSTEM
OTS	OPEN TO STRUCTURE

PAINT FINISHES

P	PAINT
AG	ANTI-GRAFFITI SEALER

MILLWORK FINISHES

PL	PLASTIC LAMINATE
SF	SOLID SURFACE
SS	STAINLESS STEEL
ST	STONE

MISC. FINISHES

FB	FABRIC

ABBREVIATIONS

NO SCALE 2

1. REFER TO A-131 FOR FLOOR FINISH LOCATIONS
2. REFER TO A-131 FOR CEILING FINISH LOCATIONS
3. CONTRACTOR SHALL COORDINATE ALL FINISH WORK AND PROVIDE A CONSTRUCTION SCHEDULE TO THE OWNER INDICATING PROPOSED INSTALLATION DATES OF ALL ITEMS.
4. ALL EXPOSED COLUMNS, PANEL BOXES, CONDUITS, SURFACE RUNWAYS, ETC.,THAT ARE NOT PREFINISHED SHALL MATCH ADJACENT PARTITION OR CEILING COLOR, UNLESS NOTED OTHERWISE.
5. ALL TILE GROUT AND UNGLAZED TILE SHALL BE SEALED.
6. MANUFACTURERS LISTED ON THE FINISH LEGEND ESTABLISH THE QUALITY, TYPE, AND COLOR. OTHER MANUFACTURERS LISTED IN THE SPECIFICATIONS OFFERING EQUAL QUALITIES WILL BE CONSIDERED.
7. CONTRACTOR SHALL PROVIDE SAMPLES TO THE ARCHITECT FOR FINAL APPROVALPRIOR TO ORDERING AND INSTALLATION.
8. INTERIOR WALL AND CEILING FINISHES SHALL COMPLY WITH THE FOLLOWING PER THE 2006 IBC, TABLE 803.5 FOR SPRINKLERED BUILDINGS:
   - 8.1. OCCUPANCY TYPE B
     - 8.1.1. CLASS B - VERITCAL EXITS AND EXIT PASSAGEWAYS
     - 8.1.2. CLASS C - EXIT ACCESS CORRIDORS AND OTHER EXITWAYS
     - 8.1.3. CLASS C - ROOMS AND ENCLOSED SPACES
9. ALL SPECIFIED MANUFACTURERS AND MODEL NUMBERS ARE PROVIDED AS THE BASIS OF DESIGN. PERFORMANCE OF FINISHES SHALL MEET OR EXCEED SPECIFICATIONS.

GENERAL NOTES

NO SCALE 1

HOUSTON AIRPORT SYSTEM

APPROVED

HOUSTON AIRPORT SYSTEM
DIRECTOR OR DESIGNATED
PDC REPRESENTATIVE

DATE

JACOBS

5985 Rogerdale Road
Houston, Texas
77072

P 832.351.6000
F 281.776.2501
W www.jacobs.com

TBPE Firm #2966

Seals:

THESE DOCUMENTS ARE FOR INTERIM REVIEW AND NOT FOR CONSTRUCTION, BIDDING OR PERMIT PURPOSES.

RESPONSIBLE ARCHITECT
CHRISTOPHER M. CASEY
24309
8-4-15

Project Client:
Houston Airport System
Project Address

Program Management Office

George Bush
Intercontinental Airport (IAH)

115 Standifer St.
Humble, TX 77338

Number	Description	Date
	95% REVIEW OF BRIDGING DOCUMENTS	21 MAY 2015
	100% BRIDGING DOCUMENTS	4 AUG 2015

Project No.:

Copyright: 2015 Jacobs Engineering

TDLR #:

Drawing Sheet Title:

FINISH LEGEND

Drawing Sheet Number:

A-603

Owner's Drawing Sheet No.:
-

DOOR							FRAME					HW	FIRE RATING (MINUTES)	NOTES	REMARKS
NO.	TYPE	LOC.	MAT'L	WIDTH	HEIGHT	THCK.	TYPE	MAT'L	HEAD	JAMB	SILL				
100	G	EXT.	AL-1/GL-2	6'-0"	8'-10"	1 3/4"	7	AL-1							CARD ACCESS
101	G	INT.	AL-1/GL-1	6'-0"	8'-10"	1 3/4"	7	AL-1							
102	F	INT.	AL-1/GL-1	3'-0"	8'-10"	1 3/4"	5	AL-1							
103	F	INT.	AL-1/GL-4	3'-0"	8'-10"	1 3/4"	5	AL-1							
104A	F	INT.	AL-1/GL-1	3'-0"	8'-10"	1 3/4"	5	AL-1							
104B	F	INT.	AL-1/GL-1	3'-0"	8'-10"	1 3/4"	5	AL-1							
104C	F	INT.	AL-1/GL-1	3'-0"	8'-10"	1 3/4"	5	AL-1							
104D	F	INT.	AL-1/GL-1	3'-0"	8'-10"	1 3/4"	5	AL-1							
104E	F	INT.	AL-1/GL-1	3'-0"	8'-10"	1 3/4"	5	AL-1							
104F	F	EXT.	AL-1/GL-2	3'-0"	8'-10"	1 3/4"	5	AL-1							
105	A	INT.	PL-1	3'-0"	8'-0"	1 3/4"	2	HM							
106	G	INT.	AL-1/GL-1	6'-0"	8'-10"	1 3/4"	7	AL-1							CARD ACCESS
108	A	INT.	PL-1	3'-0"	8'-0"	1 3/4"	1	AL-1							
109	A	INT.	PL-1	3'-0"	8'-0"	1 3/4"	1	AL-1							
110	A	INT.	PL-1	3'-0"	8'-0"	1 3/4"	1	AL-1							
111	F	EXT.	AL-1/GL-2	3'-0"	8'-10"	1 3/4"	5	AL-1							CARD ACCESS
112A	B	INT.	AL-1/GL-1	3'-0"	8'-0"	1 3/4"	1	AL-1							
112B	B	INT.	AL-1/GL-1	3'-0"	8'-0"	1 3/4"	1	AL-1							
113	C	INT.	PL-1	6'-0"	8'-0"	1 3/4"	3	AL-1							
114	C	INT.	PL-1	6'-0"	8'-0"	1 3/4"	3	AL-1							
115	E	EXT.	HM/P-1	3'-0"	8'-10"	1 3/4"	6	HM							
116	D	INT.	AL-1/GL-1	6'-0"	8'-0"	1 3/4"	3	AL-1							
117	D	INT.	AL-1/GL-1	6'-0"	8'-0"	1 3/4"	3	AL-1							
120	B	INT.	AL-1/GL-1	3'-0"	8'-0"	1 3/4"	1	AL-1							
121	B	INT.	AL-1/GL-1	3'-0"	8'-0"	1 3/4"	1	AL-1							
122	B	INT.	AL-1/GL-1	3'-0"	8'-0"	1 3/4"	1	AL-1							
123	B	INT.	AL-1/GL-1	3'-0"	8'-0"	1 3/4"	1	AL-1							
124	B	INT.	AL-1/GL-1	3'-0"	8'-0"	1 3/4"	1	AL-1							
125	B	INT.	AL-1/GL-1	3'-0"	8'-0"	1 3/4"	1	AL-1							
127	B	INT.	AL-1/GL-1	3'-0"	8'-0"	1 3/4"	1	AL-1							
128	B	INT.	AL-1/GL-1	3'-0"	8'-0"	1 3/4"	1	AL-1							
129	B	INT.	AL-1/GL-1	3'-0"	8'-0"	1 3/4"	1	AL-1							
130	B	INT.	AL-1/GL-1	3'-0"	8'-0"	1 3/4"	1	AL-1							
133	B	INT.	AL-1/GL-1	3'-0"	8'-0"	1 3/4"	1	AL-1							
134	B	INT.	AL-1/GL-1	3'-0"	8'-0"	1 3/4"	1	AL-1							
135	B	INT.	AL-1/GL-1	3'-0"	8'-0"	1 3/4"	1	AL-1							
136	B	INT.	AL-1/GL-1	3'-0"	8'-0"	1 3/4"	1	AL-1							
137	B	INT.	AL-1/GL-1	3'-0"	8'-0"	1 3/4"	1	AL-1							
138	B	INT.	AL-1/GL-1	3'-0"	8'-0"	1 3/4"	1	AL-1							
140	B	INT.	AL-1/GL-1	3'-0"	8'-0"	1 3/4"	1	AL-1							
141	B	INT.	AL-1/GL-1	3'-0"	8'-0"	1 3/4"	1	AL-1							
142	B	INT.	AL-1/GL-1	3'-0"	8'-0"	1 3/4"	1	AL-1							
143	A	INT.	PL-1	3'-0"	8'-0"	1 3/4"	1	AL-1							
147	A	INT.	PL-1	3'-0"	8'-0"	1 3/4"	1	AL-1							
148	C	INT.	PL-1	6'-0"	8'-0"	1 3/4"	4	HM							
149	A	INT.	PL-1	3'-0"	8'-0"	1 3/4"	2	HM							CARD ACCESS
150	A	INT.	PL-1	3'-0"	8'-0"	1 3/4"	2	HM							CARD ACCESS
151A	A	INT.	PL-1	3'-0"	8'-0"	1 3/4"	2	HM							CARD ACCESS
151B	A	INT.	PL-1	3'-0"	8'-0"	1 3/4"	2	HM							
152	B	INT.	AL-1/GL-1	3'-0"	8'-0"	1 3/4"	1	AL-1							
153	B	INT.	AL-1/GL-1	3'-0"	8'-0"	1 3/4"	1	AL-1							
154	B	INT.	AL-1/GL-1	3'-0"	8'-0"	1 3/4"	1	AL-1							
155	B	INT.	AL-1/GL-1	3'-0"	8'-0"	1 3/4"	1	AL-1							
156	B	INT.	AL-1/GL-1	6'-0"	8'-0"	1 3/4"	1	AL-1							
157	B	INT.	AL-1/GL-1	3'-0"	8'-0"	1 3/4"	1	AL-1							
158	F	INT.	AL-1/GL-1	3'-0"	8'-10"	1 3/4"	5	AL-1							
159	F	EXT.	AL-1/GL-2	3'-0"	8'-10"	1 3/4"	5	AL-1							CARD ACCESS
160	G	EXT.	AL-1/GL-2	6'-0"	8'-10"	1 3/4"	7	AL-1							CARD ACCESS
162	F	EXT.	AL-1/GL-2	3'-0"	8'-10"	1 3/4"	5	AL-1							CARD ACCESS
166	B	INT.	AL-1/GL-1	3'-0"	8'-0"	1 3/4"	1	AL-1							
167	B	INT.	AL-1/GL-1	3'-0"	8'-0"	1 3/4"	1	AL-1							

DOOR SCHEDULE — NO SCALE — 19

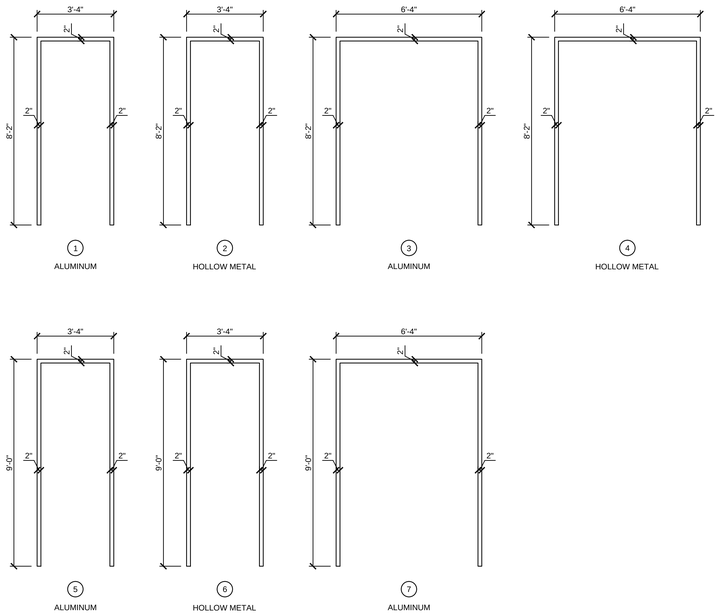

NOTE: REFER TO FLOOR PLAN (A-101) AND WINDOW & GLAZING TYPES (A-607) FOR LOCATIONS OF ADDITIONAL GLASS AND FRAMING AROUND DOORS

FRAME TYPES — 3/8" = 1'-0" — 10

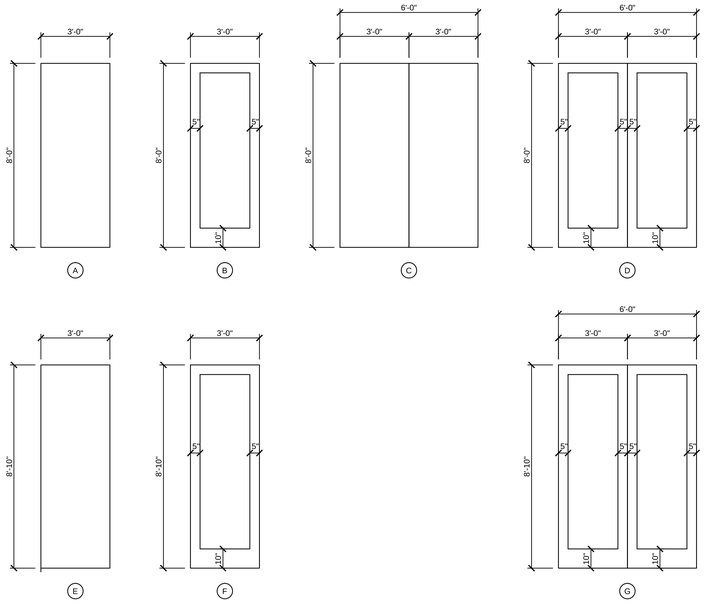

DOOR TYPES — 3/8" = 1'-0" — 7

AL	ALUMINUM
GL	GLASS
HM	HOLLOW METAL
P	PAINTED FINISH
PL	PLASTIC LAMINATE
SF	STOREFRONT SYSTEM
STL	STEEL

ABBREVIATIONS — NO SCALE — 2

1. REFER TO A-101 FOR DOOR LOCATIONS.
2. REFER TO A-603 FOR FINISH LEGEND.
3. REFER TO A-607 FOR GLAZING TYPES AND SCHEDULES.
4. REFER TO A-101 AND A-607 FOR LOCATIONS OF ADDITIONAL GLASS AND FRAMING AROUND DOORS.
5. FIELD VERIFY ALL EXISTING FRAMED OPENING SIZES PRIOR TO FABRICATION

GENERAL NOTES — NO SCALE — 1

HOUSTON AIRPORT SYSTEM

APPROVED

HOUSTON AIRPORT SYSTEM DIRECTOR OR DESIGNATED PDC REPRESENTATIVE — DATE

JACOBS

5985 Rogerdale Road
Houston, Texas
77072

P 832.351.6000
F 281.776.2501
W www.jacobs.com

TBPE Firm #2966

Seals:

THESE DOCUMENTS ARE FOR INTERIM REVIEW AND NOT FOR CONSTRUCTION, BIDDING OR PERMIT PURPOSES.

RESPONSIBLE ARCHITECT
CHRISTOPHER M. CASEY
24309
8-4-15

Project Client:
Houston Airport System
Project Address

Program Management Office

George Bush Intercontinental Airport (IAH)

115 Standifer St.
Humble, TX 77338

Number	Description	Date
	95% REVIEW OF BRIDGING DOCUMENTS	21 MAY 2015
	100% BRIDGING DOCUMENTS	4 AUG 2015

Project No.:

Copyright: 2015 Jacobs Engineering

TDLR #:

Drawing Sheet Title:

DOOR SCHEDULE AND DOOR TYPES

Drawing Sheet Number:

A-604

Owner's Drawing Sheet No.:
-

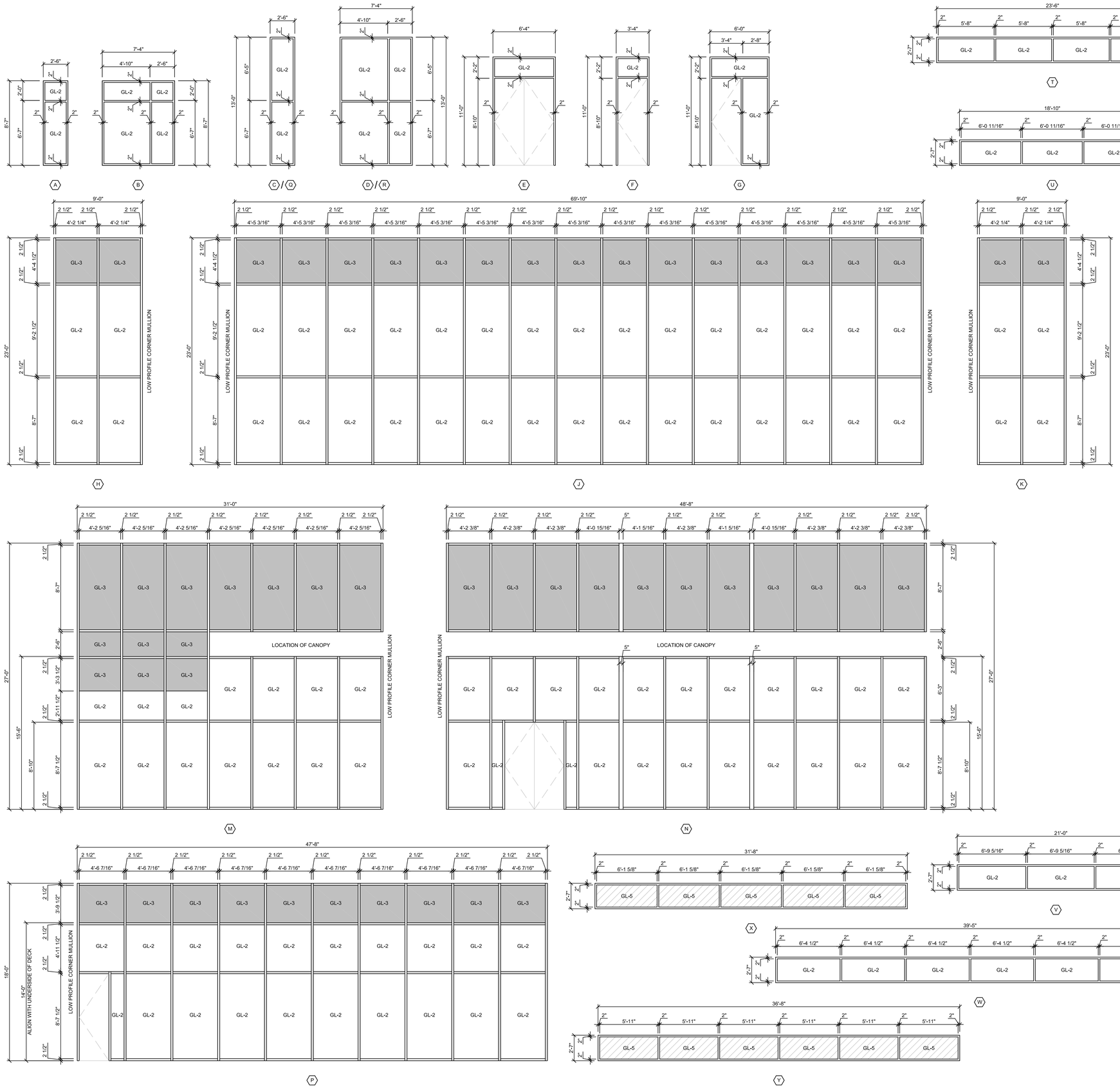

WINDOW AND GLAZING TYPES

1/4" = 1'-0" **7**

TYPE	LOCATION	WINDOW SHADE TYPE	FABRIC
A	TYP.	MANUAL MECHOSHADE	FB-1
B	TYP.	MANUAL MECHOSHADE	FB-1
C	WAR ROOM (112)	MOTORIZED MECHOSHADE W/ FULL BLACKOUT FABRIC	FB-2
D	WAR ROOM (112)	MOTORIZED MECHOSHADE W/ FULL BLACKOUT FABRIC	FB-2
T	WAR ROOM (112)	MOTORIZED MECHOSHADE W/ FULL BLACKOUT FABRIC	FB-2
Q	BIG ROOM (104)	MOTORIZED MECHOSHADE W/ FULL BLACKOUT FABRIC	FB-2
R	BIG ROOM (104)	MOTORIZED MECHOSHADE W/ FULL BLACKOUT FABRIC	FB-2
INT.	OFFCE 5 (139)	MANUAL MECHOSHADE (ALONG CORRIDOR 143 ONLY)	FB-1
INT.	OFFICE 6 (140)	MANUAL MECHOSHADE (ALONG CORRIDOR 143 ONLY)	FB-1
INT.	EXEC. 3 (141)	MANUAL MECHOSHADE (ALONG CORRIDOR 143 ONLY)	FB-1
INT.	EXEC. 4 (142)	MANUAL MECHOSHADE (ALONG CORRIDOR 143 ONLY)	FB-1

NOTE: REFER TO FINISH LEGEND (A-603) FOR FABRIC TYPES

WINDOW SHADE AND BLIND SCHEDULE

NO SCALE **4**

VISION/CLEAR GLASS

SPANDREL GLASS

TRANSLUCENT GLASS

GLAZING LEGEND

NO SCALE **3**

SYMBOL	FUNCTION	GLAZING THCK.	OUTSIDE LITE	INSIDE LITE	SHGC	U-VALUE WIN/SUM
GL-1	INT	1/4"	CLEAR	-	-	-
GL-2	EXT	1" INSUL.	VISION	CLEAR	.38	.29/.27
GL-3	EXT	1" INSUL.	SPANDREL	CLEAR	.38	.29/.27
GL-4	INT	1/4"	TRANSLUCENT	-	-	-
GL-5	EXT	1" INSUL.	TRANSLUCENT	CLEAR	.38	.29/.27

GLAZING SCHEDULE

NO SCALE **2**

1. ALL FRAMES ARE TO BE PREFINISHED ALUMINUM (AL-1), UNLESS NOTED OTHERWISE
2. REFER TO A-603 FOR FINISH LEGEND
3. ALL INTERIOR WINDOW GLASS TO BE 1/4" THICK CLEAR, UNLESS NOTED OTHERWISE
4. PROVIDE TEMPERED GLASS WHERE REQUIRED BY THE BUILDING CODE
5. REFER TO FLOOR PLAN, ROOF PLAN, AND ELEVATIONS FOR LOCATIONS OF WINDOW AND FRAME TYPES
6. PROVIDE SILICON SEALANT OVER BACKER ROD AROUND ALL EXTERIOR FRAMES
7. FIELD VERIFY ALL EXISTING FRAMED OPENING SIZES PRIOR TO FABRICATION
8. WINDOW SILL HEIGHT TO BE 2'-5", UNLESS NOTED OTHERWISE

GENERAL NOTES

NO SCALE **1**

HOUSTON AIRPORT SYSTEM

APPROVED

HOUSTON AIRPORT SYSTEM DIRECTOR OR DESIGNATED PDC REPRESENTATIVE — DATE

JACOBS

5985 Rogerdale Road
Houston, Texas
77072

P 832.351.6000
F 281.776.2501
W www.jacobs.com

TBPE Firm #2966

Seals:

THESE DOCUMENTS ARE FOR INTERIM REVIEW AND NOT FOR CONSTRUCTION, BIDDING OR PERMIT PURPOSES.

RESPONSIBLE ARCHITECT
CHRISTOPHER M. CASEY
24309
8-4-15

Project Client:
Houston Airport System
Project Address

Program Management Office

George Bush Intercontinental Airport (IAH)

115 Standifer St.
Humble, TX 77338

Number	Description	Date
	95% REVIEW OF BRIDGING DOCUMENTS	21 MAY 2015
	100% BRIDGING DOCUMENTS	4 AUG 2015

Project No.:

Copyright: 2015 Jacobs Engineering

TDLR #:

Drawing Sheet Title:

GLAZING AND WINDOW TYPES

Drawing Sheet Number:

A-607

Owner's Drawing Sheet No.:
-

HOUSTON AIRPORT SYSTEM

APPROVED

HOUSTON AIRPORT SYSTEM
DIRECTOR OR DESIGNATED
PDC REPRESENTATIVE

DATE

JACOBS

5985 Rogerdale Road
Houston, Texas
77072

P 832.351.6000
F 281.776.2501
W www.jacobs.com

TBPE Firm #2966

CONFERENCE & HUDDLE AREAS
SHARED SPACES_BREAK ROOM
RECEPTION / GUEST SUPPORT SERVICES
DOCUMENT, FILE, & COPY AREAS
8' X 8' WORKSTATIONS
OFFICES
CORE / SUPPORT FUNCTIONS

Seals:

THESE DOCUMENTS ARE FOR INTERIM REVIEW AND NOT FOR CONSTRUCTION, BIDDING OR PERMIT PURPOSES.

RESPONSIBLE ARCHITECT
CHRISTOPHER M. CASEY
24309

8-4-15

Project Client:
Houston Airport System
Project Address

Program Management Office

George Bush
Intercontinental Airport (IAH)

115 Standifer St.
Humble, TX 77338

Number	Description	Date
	95% REVIEW OF BRIDGING DOCUMENTS	21 MAY 2015
	100% BRIDGING DOCUMENTS	4 AUG 2015

Project No.:

Copyright: 2015 Jacobs Engineering

TDLR #:

Drawing Sheet Title:

RENDERED FLOOR PLAN

Drawing Sheet Number:

A-801

Owner's Drawing Sheet No.:
-

RENDERED FLOOR PLAN

N.T.S.

1

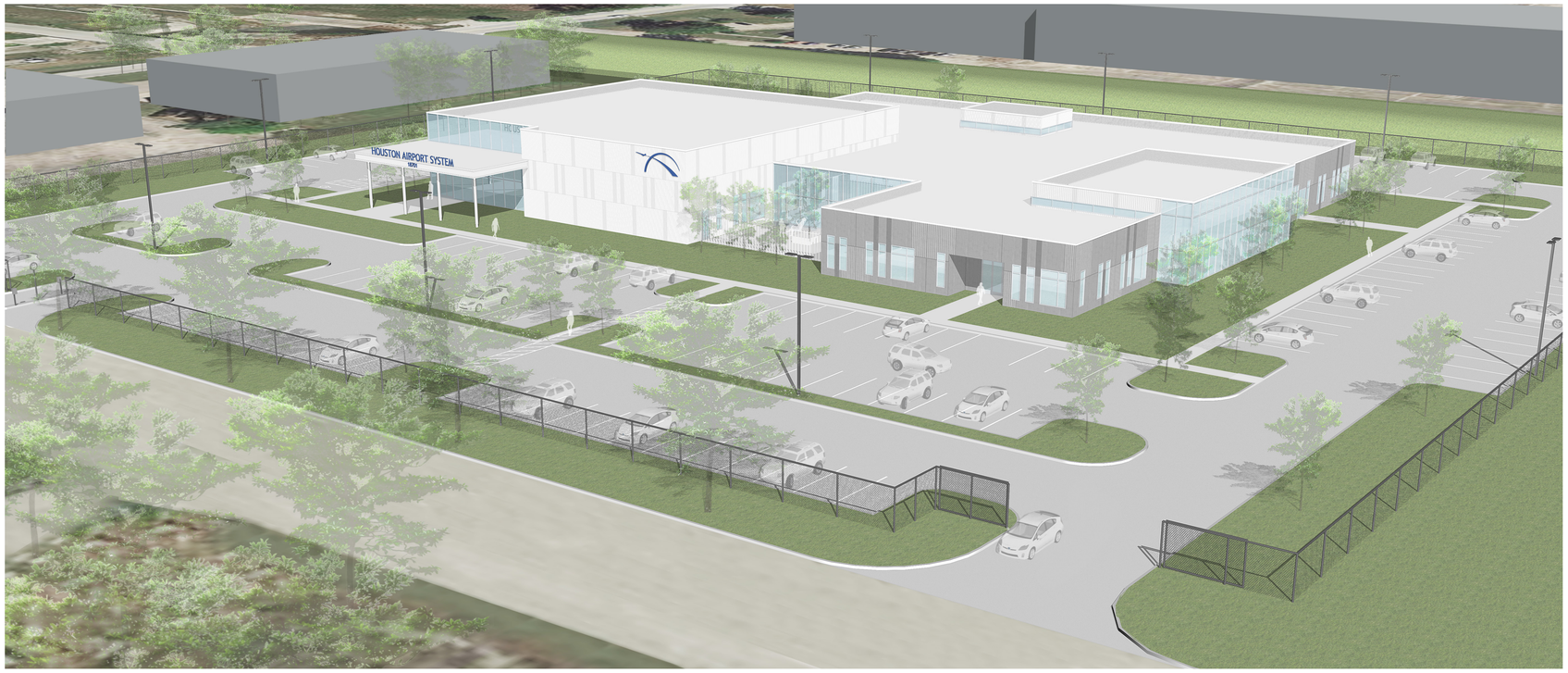

EXTERIOR RENDERING - SOUTHEAST VIEW

N.T.S. 4

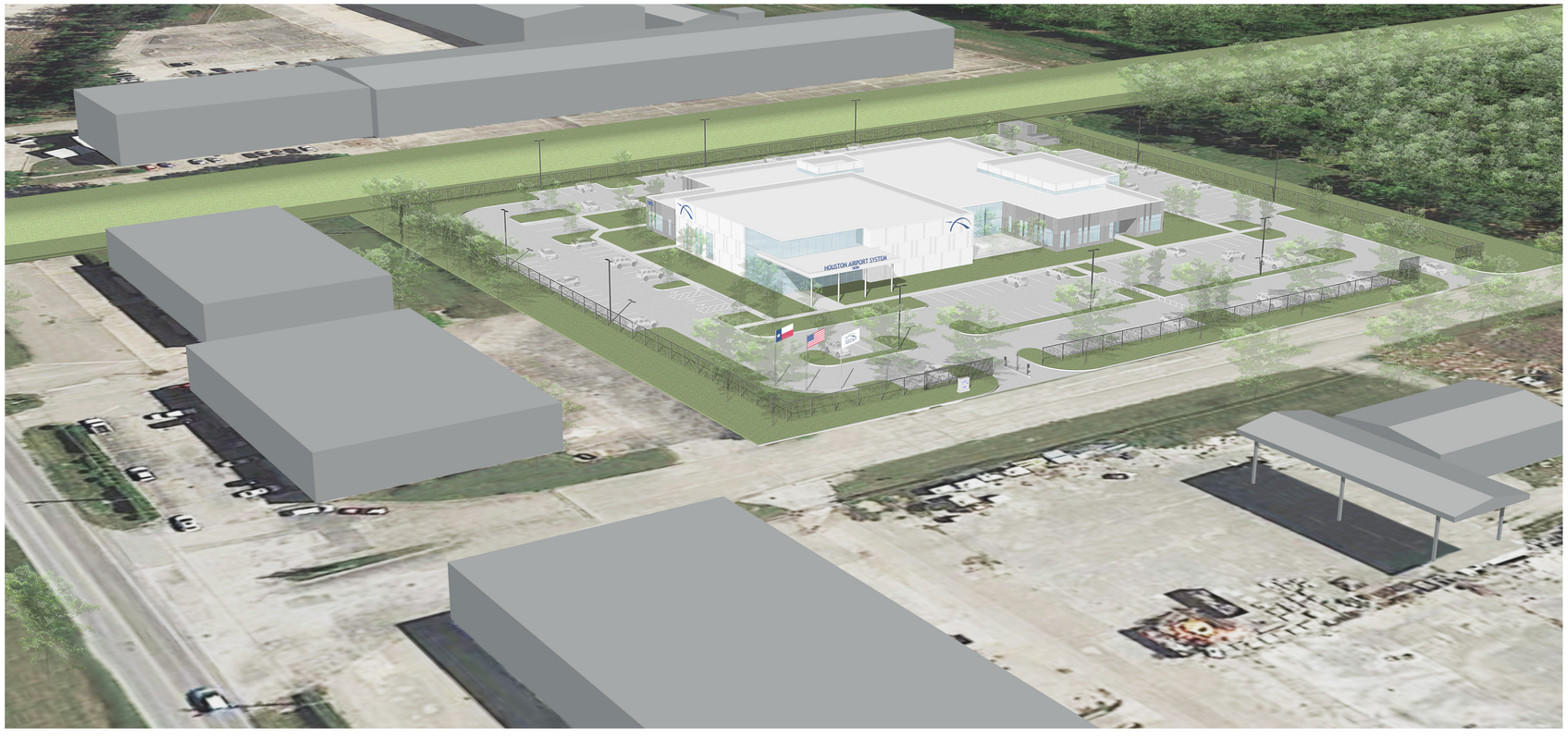

EXTERIOR RENDERING - SOUTHWEST VIEW

N.T.S. 1

HOUSTON AIRPORT SYSTEM

APPROVED

HOUSTON AIRPORT SYSTEM
DIRECTOR OR DESIGNATED
PDC REPRESENTATIVE

DATE

JACOBS

5985 Rogerdale Road
Houston, Texas
77072

P 832.351.6000
F 281.776.2501
W www.jacobs.com

TBPE Firm #2966

Seals:

THESE DOCUMENTS ARE FOR INTERIM REVIEW AND NOT FOR CONSTRUCTION, BIDDING OR PERMIT PURPOSES.

RESPONSIBLE ARCHITECT
CHRISTOPHER M. CASEY
24309

8-4-15

Project Client:

Houston Airport System

Project Address

Program Management Office

George Bush
Intercontinental Airport (IAH)

115 Standifer St.
Humble, TX 77338

Number	Description	Date
	95% REVIEW OF BRIDGING DOCUMENTS	21 MAY 2015
	100% BRIDGING DOCUMENTS	4 AUG 2015

Project No.:

Copyright: 2015 Jacobs Engineering

TDLR #:

Drawing Sheet Title:

EXTERIOR RENDERINGS

Drawing Sheet Number:

A-802

Owner's Drawing Sheet No.:

-

INTERIOR RENDERING - COFFEE BAR

N.T.S. 21

INTERIOR RENDERING - RECEPTION

N.T.S. 4

INTERIOR RENDERING - BIG ROOM

N.T.S. 1

HOUSTON AIRPORT SYSTEM

APPROVED

HOUSTON AIRPORT SYSTEM
DIRECTOR OR DESIGNATED
PDC REPRESENTATIVE

DATE

JACOBS

5985 Rogerdale Road
Houston, Texas
77072

P 832.351.6000
F 281.776.2501
W www.jacobs.com

TBPE Firm #2966

Seals:

THESE DOCUMENTS ARE FOR INTERIM REVIEW AND NOT FOR CONSTRUCTION, BIDDING OR PERMIT PURPOSES.

RESPONSIBLE ARCHITECT
CHRISTOPHER M. CASEY
24309

8-4-15

Project Client:
Houston Airport System
Project Address

Program Management Office

George Bush
Intercontinental Airport (IAH)

115 Standifer St.
Humble, TX 77338

Number	Description	Date
	95% REVIEW OF BRIDGING DOCUMENTS	21 MAY 2015
	100% BRIDGING DOCUMENTS	4 AUG 2015

Project No.:

Copyright: 2015 Jacobs Engineering

TDLR #:

Drawing Sheet Title:

INTERIOR RENDERINGS

Drawing Sheet Number:

A-803

Owner's Drawing Sheet No.:
-

INTERIOR RENDERING - WAR ROOM

N.T.S. 4

INTERIOR RENDERING - OPEN WORKSTATION AREA

N.T.S. 1

HOUSTON AIRPORT SYSTEM

APPROVED

HOUSTON AIRPORT SYSTEM
DIRECTOR OR DESIGNATED
PDC REPRESENTATIVE

DATE

JACOBS

5985 Rogerdale Road
Houston, Texas
77072

P 832.351.6000
F 281.776.2501
W www.jacobs.com

TBPE Firm #2966

Seals:

THESE DOCUMENTS ARE FOR INTERIM REVIEW AND NOT FOR CONSTRUCTION, BIDDING OR PERMIT PURPOSES.

RESPONSIBLE ARCHITECT
CHRISTOPHER M. CASEY
24309

8-4-15

Project Client:

Houston Airport System

Project Address

Program Management Office

George Bush
Intercontinental Airport (IAH)

115 Standifer St.
Humble, TX 77338

Number	Description	Date
	95% REVIEW OF BRIDGING DOCUMENTS	21 MAY 2015
	100% BRIDGING DOCUMENTS	4 AUG 2015

Project No.:

Copyright: 2015 Jacobs Engineering

TDLR #:

Drawing Sheet Title:

INTERIOR RENDERINGS

Drawing Sheet Number:

A-804

Owner's Drawing Sheet No.:

-

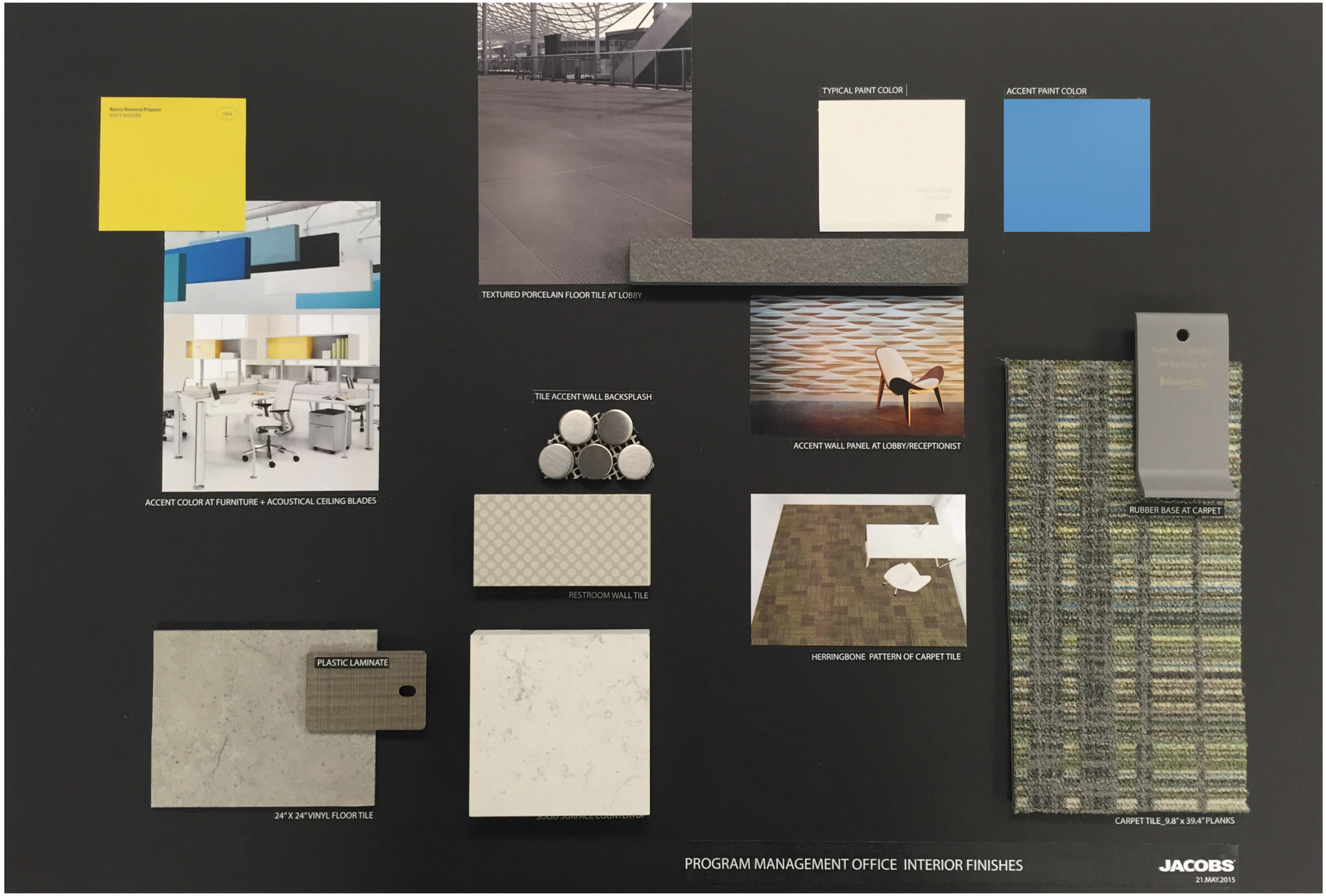

HOUSTON AIRPORT SYSTEM

APPROVED

HOUSTON AIRPORT SYSTEM DIRECTOR OR DESIGNATED PDC REPRESENTATIVE — DATE

JACOBS
5985 Rogerdale Road
Houston, Texas
77072

P 832.351.6000
F 281.776.2501
W www.jacobs.com

TBPE Firm #2966

Seals:

THESE DOCUMENTS ARE FOR INTERIM REVIEW AND NOT FOR CONSTRUCTION, BIDDING OR PERMIT PURPOSES.

RESPONSIBLE ARCHITECT
CHRISTOPHER M. CASEY
24309
8-4-15

Project Client:
Houston Airport System
Project Address

Program Management Office

George Bush
Intercontinental Airport (IAH)

115 Standifer St.
Humble, TX 77338

Number	Description	Date
	95% REVIEW OF BRIDGING DOCUMENTS	21 MAY 2015
	100% BRIDGING DOCUMENTS	4 AUG 2015

Project No.:

Copyright: 2015 Jacobs Engineering

TDLR #:

Drawing Sheet Title:

MATERIALS BOARD

Drawing Sheet Number:

A-805

Owner's Drawing Sheet No.:
-

MATERIALS BOARD

N.T.S.

1

ABBREVIATIONS

A

A	AIR (COMPRESSED)
ABV	ABOVE
A/C	AIR CONDITIONING
AC	ALTERNATING CURRENT, AIR COMPRESSOR
ACI	AMERICAN CONCRETE INSTITUTE
AD	ACCESS DOOR, AREA DRAIN
ADJ	ADJUSTABLE
AFC	ABOVE FINISHED CEILING
AFF	ABOVE FINISHED FLOOR
AFG	ABOVE FINISHED GRADE
AL	ALUMINUM
AMB	AMBIENT
AP	ACCESS PANEL, ALARM PANEL
ARCH	ARCHITECT, ARCHITECTURAL
ASME	AMERICAN SOCIETY OF MECHANICAL ENGINEERS
ASTM	AMERICAN SOCIETY OF TESTING AND MATERIALS
ATS	AUTOMATIC TRANSFER SWITCH
AV	ACID VENT, AIR VENT, AREA VALVE
AVG	AVERAGE
AW	ACID WASTE
AWS	AMERICAN WELDING SOCIETY
AUX	AUXILIARY

B

BC	BELOW COUNTER
B|C	BACK OF CURB
BFV	BUTTERFLY VALVE
BFP	BACK FLOW PREVENTER
BH	BOX HYDRANT
BLDG	BUILDING
BM	BENCHMARK
BOF	BOTTOM OF FOOTING
BOS	BOTTOM OF STRUCTURE
BT	BATH TUB, BREAK TANK
BTU	BRITISH THERMAL UNIT
BV	BALL VALVE
BWV	BACK WATER VALVE

C

C	CELSIUS
CAB	CABINET
CB	CATCH BASIN
CFM	CUBIC FEET PER MINUTE
CFS	CUBIC FEET PER SECOND
CI	CAST IRON
CIRC	CIRCULATING
CL	CENTERLINE
CLG	CEILING
CLR	CLEAR
CMP	CORRIGATED METAL PIPE
CMU	CONCRETE MASONRY UNIT
CPI	CAST IRON PIPE INSTITUTE
CPVC	CHLORINATED POLYVINYL CHLORIDE
CO	CLEAN OUT
COL	COLUMN
COMB	COMBINATION
COMP	COMPRESSOR
CON	CONVERTER
CONC	CONCRETE, CONCENTRIC
COND	CONDENSER, CONDENSATE
CONN	CONNECTION
CONT	CONTINUOUS, CONTINUATION
CONTR	CONTROLLER, CONTRACTOR
CRP	CORROSION RESISTANT PIPE
CRT	CATHODE RAY TUBE
CT	COOLING TOWER
CTR	CENTER
CU	COPPER
CW	COLD WATER
C_V	CAPACITY INDEX
CV	CHECK VALVE

D

D	DEPTH, DRAIN
DC	DIRECT CURRENT
DDC	DIRECT DIGITAL CONTROL
DE	DEIONIZED WATER SUPPLY
DEP	DEIONIZED WATER PUMP
DER	DEIONIZED WATER RETURN
DESIG	DESIGNATION
DET	DETAIL
DF	DRINKING FOUNTAIN
DIA	DIAMETER
DIM	DIMENSION
DISC	DISCONNECT
DN	DOWN
DS	DOWNSPOUT, DOUBLE SUCTION
DW	DISHWASHER
DWG	DRAWING
DWH	DOMESTIC WATER HEATER
DWP	DOMESTIC WATER PUMP

E

EA	EACH
EC	ELECTRICAL CONTRACTOR
ECC	ECCENTRIC
EDF	ELECTRIC DRINKING FOUNTAIN
EFF	EFFICIENCY
EJ	EXPANSION JOINT
EL	ELEVATION
ELEC	ELECTRICAL
ELEV	ELEVATOR
EMERG	EMERGENCY
ENCL	ENCLOSURE
ENGR	ENGINEER
EQ	EQUAL
EQUIP	EQUIPMENT
ES	END SUCTION, EMERGENCY SHOWER
ET	EXPANSION TANK
ETR	EXISTING TO REMAIN
EVAP	EVAPORATOR
EWT	ENTERING WATER TEMPERATURE
EX	EXPLOSION-PROOF
EXT	EXTERNAL
EXTG	EXISTING

F

F	FARENHEIT, FIRE
FBO	FURNISHED BY OTHERS
FCO	FLOOR CLEAN OUT
FCS	FLOOR CONTROL STATION
FD	FLOOR DRAIN
FDS	FIRE DEPARTMENT SIAMESE
FDV	FIRE DEPARTMENT VALVE
FH	FIRE HYDRANT
FHC	FIRE HOSE CABINET
FHR	FIRE HOSE RACK
FHV	FIRE HOSE VALVE
FIXT	FIXTURE
FLA	FULL LOAD AMPS
FLEX	FLEXIBLE
FL	FLOW LINE
FLR	FLOOR
FOP	FUEL OIL PUMP
FOR	FUEL OIL RETURN

F (Cont)

FOS	FUEL OIL SUPPLY
FOV	FUEL OIL VENT
FP	FIRE PUMP
FRZR	FREEZER
FS	FLOW SWITCH, FIRE SPRINKLER
FT	FOOT, FEET
FUT	FUTURE

G

G	GAS
GA	GAGE
GAL	GALLON
GALV	GALVANIZED
GC	GENERAL CONTRACTOR
GLV	GLOBE VALVE
GND	GROUND
GPD	GALLONS PER DAY
GPH	GALLONS PER HOUR
GPM	GALLONS PER MINUTE
GV	GATE VALVE

H

H	HEIGHT
HB	HOSE BIBB
HD	HEAD, HUB DRAIN
HE	HEAT EXCHANGER
HORIZ	HORIZONTAL
HP	HORSEPOWER, HALON PANEL
HKP	HOUSEKEEPING PAD
HSC	HORIZONTAL SPLIT CASE
HTG	HEATING
HTR	HEATER
HW	HOT WATER
HWC	HOT WATER CIRCULATOR
HWR	HOT WATER RETURN
HWS	HOT WATER SUPPLY
HZ	HERTZ

I

ID	INSIDE DIAMETER
IE	INVERT ELEVATION
IN	INCH
INSUL	INSULATION
INT	INTERNAL, INTERIOR
IW	INDIRECT WASTE

J

JB	JUNCTION BOX
JP	JOCKEY PUMP

K

KEC	KITCHEN EQUIPMENT CONTRACTOR
KO	KNOCKOUT
KVA	KILOVOLT-AMPS
KW	KILOWATT

L

L	LENGTH, LAVATORY
LA	LABORATORY AIR
LAV	LAVATORY
LF	LINEAR FEET
LRA	LOCKED ROTOR AMPS
LV	LABORATORY VACUUM
LVL	LEVEL
LWCO	LOW WATER CUT OFF
LWT	LEAVING WATER TEMPERATURE

M

M	METER
MA	MEDICAL AIR
MAP	MASTER ALARM PANEL
MAX	MAXIMUM
MBH	THOUSAND OF BTU'S
MC	MECHANICAL CONTRACTOR
MECH	MECHANICAL
MFR	MANUFACTURER
MG	MEDICAL GAS OUTLET
MH	MANHOLE
MI	MALLEABLE IRON
MIN	MINIMUM
MP	MEDICAL AIR PURIFIER
MS	MOP SINK
MTD	MOUNTED
MU	MAKE-UP
MV	MEDICAL VACUUM

N

N	NITROGEN
NO	NITROUS OXIDE
N.C.	NORMALLY CLOSED
NFPA	NATIONAL FIRE PROTECTION ASSOCIATION
NIC	NOT IN CONTRACT
N.O.	NORMALLY OPEN
NO.	NUMBER
NTS	NOT TO SCALE

O

O	OXYGEN
OC	ON CENTER
OD	OUTSIDE DIAMETER, OVERFLOW DRAIN
OE	ORAL EVACUATION
OPG	OPENING
OS&Y	OPEN STEM AND YOLK

P

P	PUMP, PLUMBING EQUIPMENT
PC	PLUMBING CONTRACTOR
PCR	PUMPED CONDENSATE RETURN
PD	PRESSURE DROP, PLANTER DRAIN
PH	PHASE
PIV	POST INDICATOR VALVE
PLBG	PLUMBING
PNEU	PNEUMATIC
PNL	PANEL
PNTH	PENTHOUSE
PP	POLYPROPYLENE
PPM	PARTS PER MILLION
PRI	PRIMARY
PRS	PRESSURE REDUCING STATION
PRV	PRESSURE REDUCING VALVE
PSF	POUNDS PER SQUARE FOOT

P Cont)

PSI	POUNDS PER SQUARE INCH
PSIG	POUNDS PER SQUARE INCH GAUGE
PT	PLUMBING TRIM
PV	PLUG VALVE
PVC	POLYVINYL CHLORIDE
PW	PROCESS WASTE

Q

QTY	QUANTITY

R

R	RISER
RAD	REFRIGERATED AIR DRYER
RCP	REFLECTED CEILING PLAN, REINFORCED CONCRETE PIPE
RD	ROOF DRAIN
RE:	REFERENCE, REFER
RECIRC	RECIRCULATE
RED	REDUCER
REFR	REFRIGERATOR
REINF	REINFORCING
REQD	REQUIRED
REV	REVISION, REVISE
RH	RELATIVE HUMIDITY
RKVA	RUNNING KILOVOLT-AMPS
RKW	RUNNING KILOWATTS
RLA	RUNNING LOAD AMPS
RM	ROOM, REFRIGERATION MACHINE
RPM	REVOLUTIONS PER MINUTE
RPZ	REDUDCED PRESSURE BACK FLOW PREVENTER
RV	RELIEF VALVE

S

SAN	SANITARY SEWER
SC	STEAM CONVERTER
SCHED	SCHEDULED
SCR	SILICON CONTROLLED RECTIFIER
SD	STORM DRAIN
SE	SEWAGE EJECTOR
SEC	SECONDARY
SECT	SECTION
SF	SQUARE FEET
SFCS	SPRINKLER FLOOR CONTROL STATION
SH	SHOWER
SHT	SHEET
SIM	SIMILAR
SK	SINK
SKVA	STARTING KILOVOLT-AMPS
SKW	STARTING KILOWATTS
SP	SUMP PUMP
SPEC	SPECIFICATION
SPR	SPRINKLER
SQ	SQUARE
SS	SERVICE SINK
SSD	SUBSURFACE DRAIN
SSFU	SANITARY SEWER FIXTURE UNITS
STD	STANDARD
STL	STEEL
STR	STRAINER
SURF	SURFACE
SUSP	SUSPEND
SV	SANITARY VENT

T

TCC	TEMPERATURE CONTROL COMPRESSOR
TD	TRENCH DRAIN
TDH	TOTAL DYNAMIC HEAD
TH BLK	THRUST BLOCK
TOC	TOP OF CURB
TP	TRAP PRIMER
TSTAT	THERMOSTAT
TW	TEMPERED WATER
TYP	TYPICAL

U

U	URINAL
UG	UNDERGROUND
UL	UNDERWRITERS LABORATORIES, INC.
UON	UNLESS OTHERWISE NOTED
U|F	UNDERFLOOR
U|S	UNDERSLAB

V

V	VOLT, VENT, VACUUM
VA	VOLT-AMPERE
VAC	VACUUM
VB	VALVE BOX
VCP	VITRIFIED CLAY PIPE
VEL	VELOCITY
VP	VACUUM PUMP
VERT	VERTICAL
VIB	VALVE IN BOX
VOV	VALVE ON VERTICAL
VTR	VENT THRU ROOF

W

W	WATT, WASTE, WIDTH
W|	WITH
W|O	WITHOUT
WC	WATER CLOSET
WCO	WALL CLEANOUT
WH	WALL HYDRANT
WM	WATER METER
WP	WEATHERPROOF
WPD	WATER PRESSURE DROP
WS	WATER SOFTENER
WT	WATERTIGHT, WEIGHT
WWF	WELDED WIRE FABRIC

Y

YH	YARD HYDRANT

Z

Z	ZONE
ZV	ZONE VALVE

PLUMBING SYMBOLS (ALL SYMBOLS SHOWN ARE NOT NECESSARILY USED ON THE DRAWINGS)

PIPING TYPES

- SANITARY DRAIN BELOW FLOOR
- SANITARY DRAIN ABOVE FLOOR (NOTED)
- GW — GREASE WASTE
- SANITARY VENT
- SD — STORM DRAIN
- OD — OVERFLOW DRAIN
- COLD WATER
- HOT WATER
- HOT WATER RECIRCULATION
- G — NATURAL GAS
- F — FIRE STANDPIPE, FIRE LINE
- FS — FIRE SPRINKLER
- TP — TRAP PRIMER
- D — DRAIN LINE
- aaa — EXISTING PIPE, "aaa" DENOTES TYPE
- X aaa X — EXISTING PIPE TO BE REMOVED, "aaa" DENOTES TYPE

MISCELLANEOUS

- FLOOR DRAIN
- FLOOR SINK
- ROOF DRAIN OR OVERFLOW DRAIN
- HOSE BIBB
- WALL HYDRANT
- PLUMBING FIXTURES
- POINT OF NEW CONNECTION TO EXISTING PIPING
- 1 — DRAWING NOTE REFERENCE
- 1 R620 — OWNER OR CONTRACTOR FURNISHED EQUIPMENT REFERENCE
- aaabb — PLUMBING EQUIPMENT REFERENCE. "aaa" DENOTES TYPE, "bb" DENOTES NUMBER.
- P 1 — RISER DESIGNATION. "P" DENOTES WASTE|VENT OR WASTE|VENT|WATER, "W" DENOTES WATER, "DS" DENOTES DOWNSPOUT, "F" DENOTES FIRE.
- FIRE DEPARTMENT SIAMESE CONNECTION

PIPING SYMBOLS

- ELBOW UP
- ELBOW DOWN
- VALVE IN DROP
- VALVE IN RISE
- DIRECTION OF FLOW
- DIRECTION OF SLOPE DOWN
- CONCENTRIC REDUCER
- ECCENTRIC REDUCER
- TEE OUTLET UP
- TEE OUTLET DOWN
- UNION
- PIPE ANCHOR
- EXPANSION JOINT
- STRAINER WITH BLOWDOWN VALVE
- GATE VALVE
- GLOBE VALVE
- BALL VALVE
- BALANCING VALVE WITH DIFFERENTIAL PRESSURE TAPS
- OS&Y VALVE
- CHECK VALVE
- PRESSURE REDUCING VALVE
- FCS — SPRINKLER FLOOR CONTROL STATION
- GAS VALVE
- MANUAL AIR VENT
- AUTOMATIC AIR VENT
- T&P RELIEF VALVE
- VACUUM BREAKER
- LINE CLEANOUT
- FLOOR CLEANOUT
- PRESSURE GAUGE WITH GAUGE COCK
- THERMOMETER
- FLEXIBLE CONNECTION
- DOUBLE CHECK REDUCED PRESSURE BACKFLOW PREVENTER

PIPING MATERIALS (REFER TO SPECIFICATIONS)

(RE: P3.01 FOR FULL SCHEDULE)

1. SANITARY WASTE AND VENT PIPING: CAST IRON
2. DOMESTIC WATER: TYPE "L" COPPER TUBING
3. STORM DRAIN PIPING: CAST IRON AND SCH. 40

GENERAL NOTES

A. REFER TO SPECIFICATIONS FOR MATERIALS AND METHODS FOR PLUMBING CONSTRUCTION.

B. REFER TO ARCHITECTURAL REFLECTED CEILING PLANS FOR THE EXACT LOCATION OF ALL CEILING MOUNTED DEVICES.

C. REFER TO ARCHITECTURAL INTERIOR ELEVATION DRAWINGS, WHERE THE ARCHITECT HAS DRAWN SUCH ELEVATIONS, FOR THE LOCATIONS OF ALL WALL MOUNTED DEVICES.

D. COORDINATE ALL SLAB PENETRATIONS AND SLEEVES WITH THE GENERAL CONTRACTOR PRIOR TO EACH CONCRETE POUR.

E. FURNISH ACCESS DOORS FOR INSTALLATION BY THE GENERAL CONTRACTOR IN WALLS AND CEILINGS WHERE ACCESS IS REQUIRED TO CONCEALED PLUMBING EQUIPMENT, VALVES, CONTROLS AND OTHER DEVICES.

F. ALL PIPING SHALL BE INSTALLED A MINIMUM OF 6 INCHES ABOVE THE FINISHED CEILING TO PROVIDE CLEARANCE FOR ELECTRICAL CONDUIT AND LIGHTING FIXTURES.

G. THE PLUMBING CONTRACTOR SHALL BE RESPONSIBLE FOR COORDINATING THE LOCATION OF PIPING WITH OTHER TRADES AND RELOCATING PIPING OR PROVIDING OFFSETS IN PIPING AS REQUIRED.

H. ASTERISK (*) IN EQUIPMENT DESIGNATIONS CORRESPONDS TO THE FLOOR NUMBER.

I. THE BUILDING FIRE PROTECTION SYSTEM SHALL CONSIST OF A COMPLETE SYSTEM OF COMBINATION STANDPIPE AND COMPLETE AUTOMATIC SPRINKLER PROTECTION, AS SHOWN ON THE DRAWINGS AND AS SPECIFIED.

J. COORDINATE THE EXACT LOCATION OF FLOOR DRAINS WITH THE ARCHITECTURAL DRAWINGS, THE MECHANICAL CONTRACTOR AND EQUIPMENT SUPPLIERS, PRIOR TO INSTALLATION OF DRAINS.

DRAWING LIST

BID DOCUMENTS ONLY
Document incomplete: Not intended for permit or construction.
Engineer: N. Curt Jones, P.E.
P.E. Serial No.: 58428
Date: August 4, 2015

HOUSTON AIRPORT SYSTEM

APPROVED

HOUSTON AIRPORT SYSTEM DIRECTOR OR DESIGNATED PDC REPRESENTATIVE — DATE

JACOBS
5985 Rogerdale Road
Houston, Texas
77072

[P] 832.351.6000
[F] 281.776.2501
[W] www.jacobs.com

TBPE Firm #2966

Consultants:

JONES ENGINEERS, L.P.
Texas Registered Engineering Firm #F-3811
9820 Whithorn Drive
Houston, Texas 77095
[T] (713)222-7766
[F] (281)500-8160

Seals:

Project Client:
Houston Airport System
Project Address

Program Management Office

George Bush Intercontinental Airport (IAH)

115 Standifer St.
Humble, TX 77338

Number	Description	Date
	95% REVIEW OF BRIDGING DOCUMENTS	21 MAY 2015
	100% BRIDGING DOCUMENTS	4 AUG 2015

Project No.:

Copyright: 2015 Jacobs Engineering

TDLR #:

Drawing Sheet Title:

PLUMBING ABBREVIATION AND SYMBOLS

Drawing Sheet Number:

P0.01

Owner's Drawing Sheet No.:

GENERAL NOTE:
BUILDING TO BE 100% SPRINKLED PER NFPA 13.

PLUMBING FIXTURE TYPE:

WATER CLOSET – WALL HUNG VITREOUS CHINA WITH SENSOR VALVE.
URINAL – WALL HUNG VITREOUS CHINA WITH SENSOR VALVE.
LAVATORY – COUNTER TOP WITH SENSOR VALVE.

PIPING MATERIALS

1. SANITARY WASTE AND VENT PIPING:
   ABOVE SLAB: CAST IRON
   BELOW SLAB: SCHEDULE 40 PVC
2. DOMESTIC WATER: TYPE "L" COPPER
3. STORM PIPING:
   ABOVE SLAB: CAST IRON
   BELOW SLAB: SCHEDULE 40 PVC
4. NATURAL GAS PIPING: BLACK STEEL

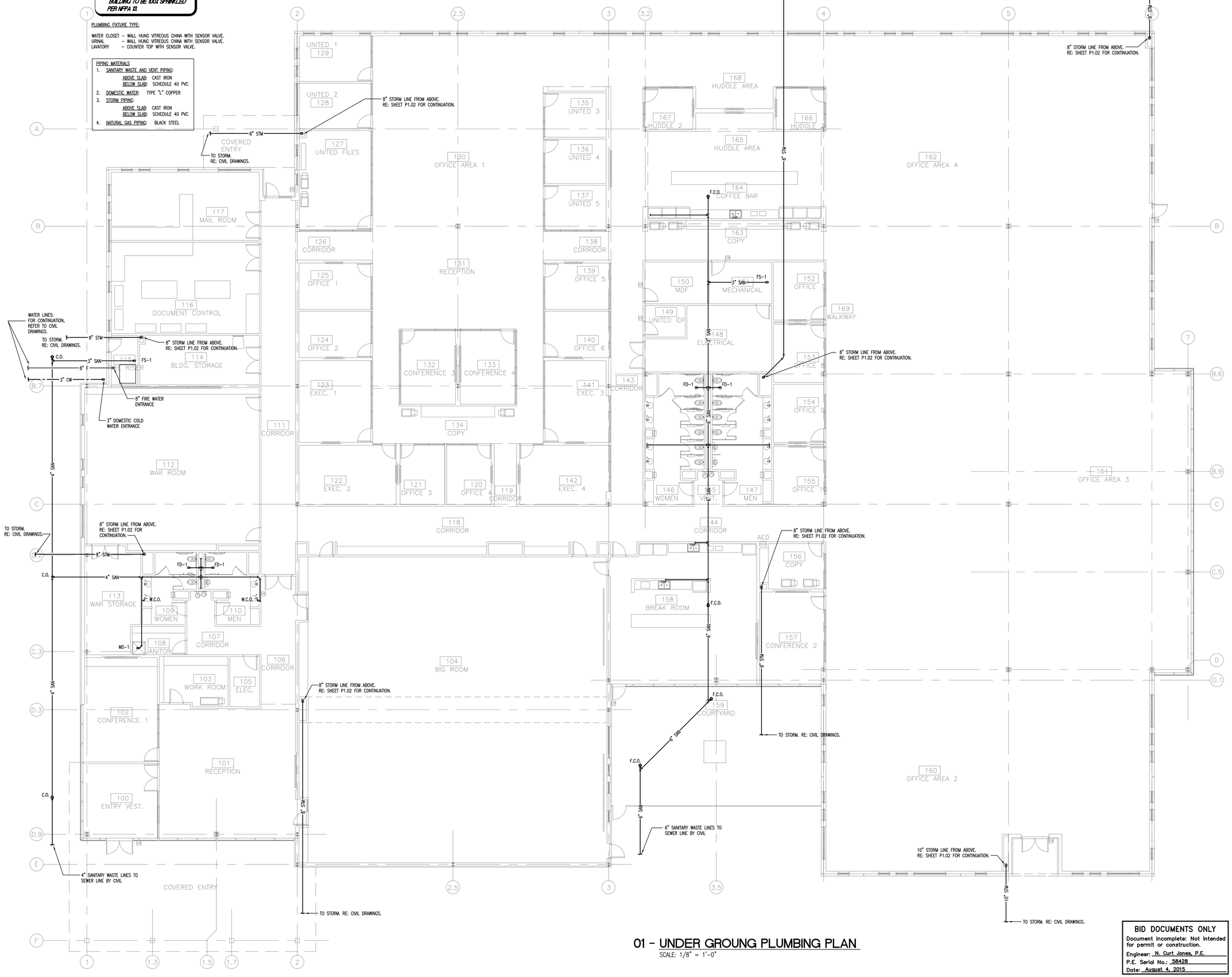

01 - UNDER GROUNG PLUMBING PLAN

SCALE: 1/8" = 1'-0"

BID DOCUMENTS ONLY
Document incomplete: Not intended for permit or construction.
Engineer: N. Curt Jones, P.E.
P.E. Serial No.: 58428
Date: August 4, 2015

HOUSTON AIRPORT SYSTEM

APPROVED

HOUSTON AIRPORT SYSTEM DIRECTOR OR DESIGNATED PDC REPRESENTATIVE — DATE

JACOBS
5985 Rogerdale Road
Houston, Texas
77072

[P] 832.351.6000
[F] 281.776.2501
[W] www.jacobs.com

TBPE Firm #2966

Consultants:

JONES ENGINEERS, L.P.
Texas Registered Engineering Firm #F-3811
9820 Whithorn Drive
Houston, Texas 77095
[T] (713)222-7766
[F] (281)500-8160

Seals:

Project Client:
Houston Airport System
Project Address

Program Management Office

George Bush
Intercontinental Airport (IAH)

115 Standifer St.
Humble, TX 77338

Number	Description	Date
	95% REVIEW OF BRIDGING DOCUMENTS	21 MAY 2015
	100% BRIDGING DOCUMENTS	4 AUG 2015

Key Plan — Project North

GRAPHIC SCALE: 1/8" = 1'-0"

Project No.:

Copyright: 2015 Jacobs Engineering

TDLR #:

Drawing Sheet Title:

UNDER GROUND PLUMBING PLAN

Drawing Sheet Number:

P1.01

Owner's Drawing Sheet No.:

GENERAL NOTE:
BUILDING TO BE 100% SPRINKLED PER NFPA 13.

PLUMBING FIXTURE TYPE:

WATER CLOSET – WALL HUNG VITREOUS CHINA WITH SENSOR VALVE.
URINAL – WALL HUNG VITREOUS CHINA WITH SENSOR VALVE.
LAVATORY – COUNTER TOP WITH SENSOR VALVE.

PIPING MATERIALS
1. SANITARY WASTE AND VENT PIPING:
   ABOVE SLAB: CAST IRON
   BELOW SLAB: SCHEDULE 40 PVC
2. DOMESTIC WATER: TYPE "L" COPPER
3. STORM PIPING:
   ABOVE SLAB: CAST IRON
   BELOW SLAB: SCHEDULE 40 PVC
4. NATURAL GAS PIPING: BLACK STEEL

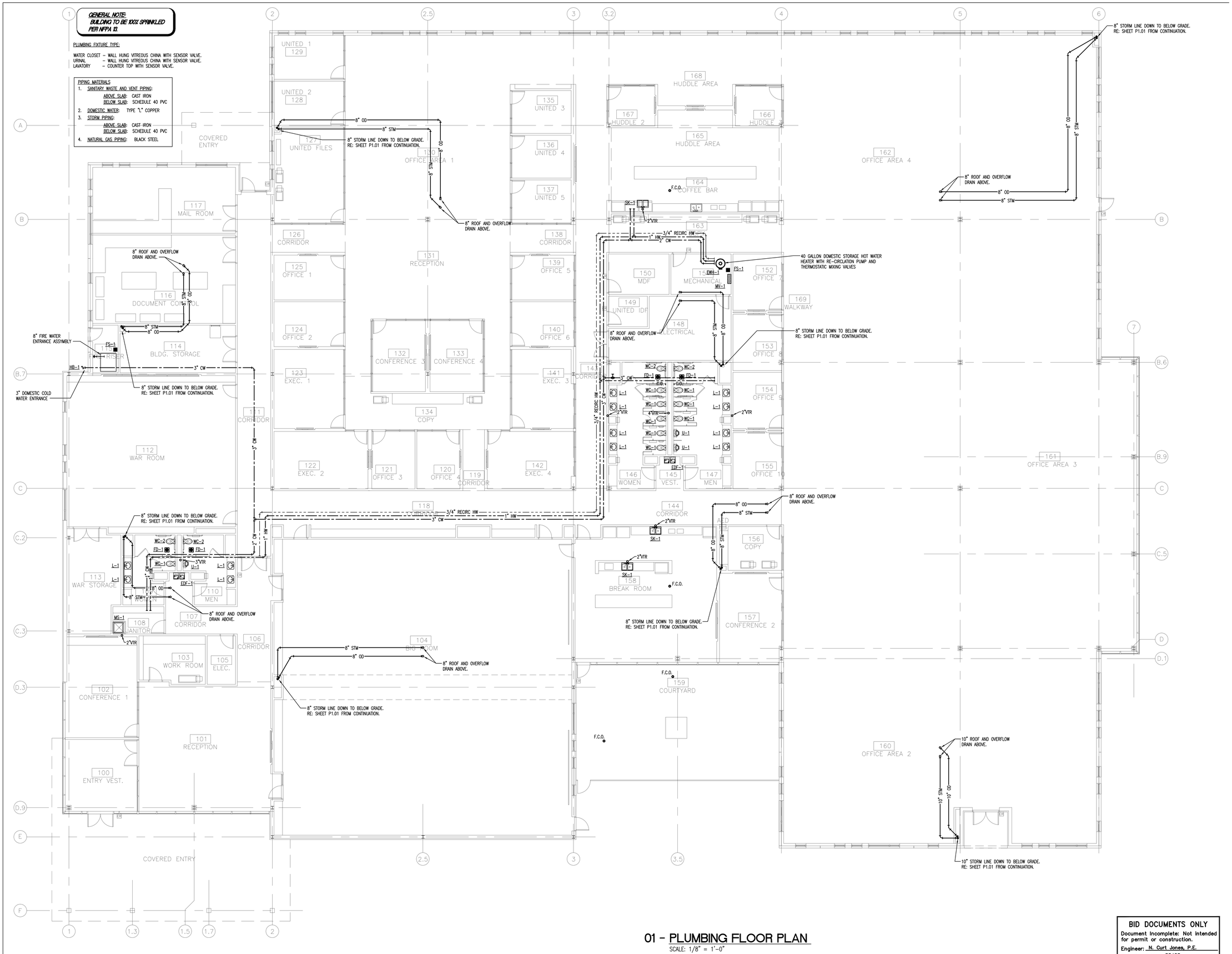

01 - PLUMBING FLOOR PLAN

SCALE: 1/8" = 1'-0"

BID DOCUMENTS ONLY
Document Incomplete: Not intended for permit or construction.
Engineer: N. Curt Jones, P.E.
P.E. Serial No.: 58428
Date: August 4, 2015

HOUSTON AIRPORT SYSTEM

APPROVED

HOUSTON AIRPORT SYSTEM DIRECTOR OR DESIGNATED PDC REPRESENTATIVE — DATE

JACOBS
5985 Rogerdale Road
Houston, Texas
77072

[P] 832.351.6000
[F] 281.776.2501
[W] www.jacobs.com

TBPE Firm #2966

Consultants:

JONES ENGINEERS, L.P.
Texas Registered Engineering Firm #F-3811
9820 Whithorn Drive
Houston, Texas 77095
[T] (713)222-7766
[F] (281)500-8160

Seals:

Project Client:
Houston Airport System
Project Address

Program Management Office

George Bush Intercontinental Airport (IAH)

115 Standifer St.
Humble, TX 77338

Number	Description	Date
	95% REVIEW OF BRIDGING DOCUMENTS	21 MAY 2015
	100% BRIDGING DOCUMENTS	4 AUG 2015

Key Plan

Project North

0 8 16 24
GRAPHIC SCALE: 1/8" = 1'-0"

Project No.:

Copyright: 2015 Jacobs Engineering

TDLR #:

Drawing Sheet Title:

PLUMBING
FLOOR PLAN

Drawing Sheet Number:

P1.02

Owner's Drawing Sheet No.:

GENERAL NOTES

1. PRIOR TO WORK CONTRACTOR SHALL TIGHTLY COORDINATE PLUMBING WORK WITH OTHER TRADES.
2. ALL NEW WORK SHALL CONFORM TO THE 2006 UNIFORM PLUMBING CODE WITH ADDENDUMS.
3. DRAWINGS ARE DIAGRAMMATIC IN NATURE, NOT ALL REQUIRED PIPE ELBOWS, TEES, AND ASSOCIATED FITTINGS ARE SHOWN. CONTRACTOR SHALL PROVIDE A COMPLETE WORKING PLUMBING SYSTEM PER THE SPECIFICATIONS AND PLUMBING CODE.
4. THE SIZE OF THE STORM DRAINAGE SYSTEM IS BASED ON 8.0" RAINFALL RATE PER THE CITY OF HOUSTON PLUMBING CODE.

PLUMBING PIPE MATERIALS SPECIFICATION

SERVICE	PIPE	FITTING
SANITARY DRAINAGE AND VENT ABOVE GRADE	SERVICE WEIGHT CAST IRON, CISPI 301	SERVICE WEIGHT NO-HUB FITTINGS WITH HEAVY WEIGHT NO-HUB COUPLINGS CISPI 310, SIMILAR TO ANACO "HUSKEY", 2000 OR MISSION "HW"
SANITARY DRAINAGE AND VENT BELOW GRADE	HOT-DIP COATED SERVICE WEIGHT CAST IRON BELL & SPIGOT, ASTM A74.	SERVICE WEIGHT CAST IRON BELL & SPIGOT FITTINS WITH ELASTOMERIC GASKETS, ASTM C564.
DOMESTIC WATER ABOVE GRADE AND CONDENSATE DRAIN LINES	TYPE "K" OR "L" HARD DRAWN COPPER (ASTM B88)	ANSI B16.22 WROUGHT COPPER WITH NO JOINTS BELOW SLAB ON GRADE
DOMESTIC WATER BELOW GRADE	TYPE "K" SOFT COPPER (ASTM B88 ANNEALED)	ANSI B16.22 WROUGHT COPPER 95-5 SOLDER LEAD-FREE JOINTS, ASTM B32
STORM AND OVERFLOW DRAINAGE ABOVE GRADE	SERVICE WEIGHT CAST IRON, CISPI 301	FOR SIZES UP TO 8": SERVICE WEIGHT DWV NO-HUB FITTINGS WITH HEAVYWEIGHT 4-BAND COUPLINGS FOR PIPE SIZES 4" AND LESS AND 6-BAND COUPLINGS FOR PIPE SIZES OVER 4" CONFORMING TO CISPI 310, MANUF. BY ANACO "HUSKEY" MISSION "HW" OR TYLER WIDE BODY. FOR SIZES OVER 8": SERVICE WEIGTH BELL & SPIGOT DWV DWV FITTINGS WITH NEOPRENE GASKETS, ASTM C564.
STORM AND OVERFLOW DRAINAGE BELOW GRADE	SERVICE WEIGHT CAST IRON, CISPI 301	SERVICE WEIGHT BELL & SPIGOT DWV FITTINGS WITH NEOPRENE GASKETS, ASTM C564.

PLUMBING PIPING LEGEND

SYMBOLS	DESCRIPTION
	SANITARY SEWER
	SANITARY VENT
	EXISTING PIPING
GW	GREASE WASTE (G.W.)
	DOMESTIC COLD WATER (C.W.)
	DOMESTIC HOT WATER SUPPLY (H.S.)
	RECIRCULATED HOT WATER (R.H.W.)
F	FILTERED WATER LINE
NG	NATURAL GAS (G.)
F	FIRE LINE (F.)
FS	FIRE SPRINKLER LINE (F.S.)
SD	STORM DRAIN (S.D.)
OD	OVERFLOW DRAIN (O.D.)
	FIRE SHUT-OFF VALVE W/ MONITOR SWT
	SHUT-OFF VALVE (G.V.)
	CHECK VALVE (CH.V.)
	BALANCING VALVE (BAL.V.)
	EXISTING PIPING AS NOTED
	(N) CONNECTION TO (E)
	CLEANOUT (C.O.)
	FLOOR CLEANOUT (F.C.O.)
	FLOOR DRAIN (F.D.)
	FLOOR SINK (F.S.)
	CONNECT TO EXISTING, THIS AREA.
W.C.O.	WALL CLEANOUT
BFP.	BACK FLOW PREVENTER
TP	TRAP PRIMER
R.D.	ROOF DRAIN
O.D.	OVERFLOW DRAIN
F.L.	FLOW LINE
F.F.	FINISHED FLOOR
B.O.P.	BOTTOM OF PIPE
B.O.B.	BOTTOM OF BEAM
DWG.	DRAWING
CONT.	CONTINUATION
(N)	NEW ITEMS
(E)	EXISTING ITEMS
(R)	RELOCATED ITEMS
(D)	ITEMS TO BE REMOVED
FHC	FIRE HOSE CABINET
FHV	FIRE HOSE VALVE
A.F.F.	ABOVE FINISHED FLOOR
N.I.C.	NOT IN CONTRACT
R.I.C.	ROUGH-IN AND CONNECT

NOTE: NOT ALL SYMBOLS ARE USED IN THIS PROJECT.

PLUMBING FIXTURE SCHEDULE

MARK	FIXTURE	PIPE SIZES (In.)				DESCRIPTION			
		CW	HW	VENT	W	MANUFACTURER	MODEL	MODEL #	ACCESSORIES
EDF-1	ELECT. WATER COOLER	1/2	--	1 1/2	2	HALSEY TAYLOR	HAC8FSBL-Q-SS		WALL HUNG, BI-LEVEL SURFACE MOUNTING WITH HTAPR (CANE TOUCH), ALL STAINLESS STEEL, VANDAL PROOF KIT, CAPACITY TO FURNISH 8 GPM OF 50°F WATER AT 90°F AMBIENT TEMPERATURE USING 1/5 HP, 120 VOLT, 1 PHASE, 60 HZ MOTOR.
EWH-1	WATER HEATER	3/4	3/4	- -	- -	A.O. SMITH	DEL	DEN 40	4.5 KW, 208 V, 1 PH, 40 GALLON WATER HEATER, WITH GRUNDFOS CIRCULATING PUMP, 2.0 GPM, 1.5 FT. HEAD. OR EQUAL.
FD-1	FLOOR DRAIN	--	--	2	3	ZURN	--	ZN-415	FLOOR DRAIN W/ TYPE 'B' STRAINER.
FS-1	FLOOR DRAIN	--	--	2	3	ZURN	--	ZN-1910	8"X8"X6" FLOOR SINK W/ 1/2 GRATE.
HB-1	HOSE BIBB	3/4	--	- -	- -	WOODFORD	24P	--	BRASS BODY WITH INTERNAL VACUUM BREAKER AND CAST OR STEEL WHEEL HANDLE.
L-1	LAVATORY	1/2	1/2	1 1/2	2	AMERICAN STANDARD	AQUALYN	0475.020	UNDERCOUNTER MOUNTED, WHITE VITREOUS CHINA FIXTURE, SUPPORT CLIPS FOR UNDER COUNTER MOUNTING, GRID STRAINER, P-TRAP AND TOTO MODEL TEL 3AAC-10, SINGLE SUPPLY INFRARED ACTIVATED SENSOR, 0.5 GPM, 10 SECONDS PER CYCLE, SINGLE HOLE FAUCET WITH 4"CC COVER PLATE, VANDAL RESISTANT AND SUPPLY TUBES. GRID DRAIN, 1 1/4" INSULATED P-TRAP (TRUE BRO TRAP WRAP OR EQUAL).
MS-1	MOP SINK	3/4	3/4	2	3	FIAT	2424	--	24"X24"X12" PRE-CAST TERRAZZO MOP SERVICE BASIN W/ #830-AA CHROME PLATED FAUCET W/ VACUM BREAKER.
SK-1	SINK	1/2	1/2	1 1/2	2	ELKAY	LUSTERTONE	ELUHAD3118	UNDER COUNTER MOUNTED, ADA COMPLIANT, W/ LK-2439 FAUCET. AND KENMORE # 42-6010 DISPOSAL MAXIMUM DEPTH 11 3/8". PROVIDE TRU-BRO 1 1/4 INSULATED P-TRAP WRAP OR HANDI BASIN GUARD UNDERSINK ENCLOSURE, MODEL 36. (COORDINATE W/ ARCHITECT.)
U-1	URINAL	3/4	--	1 1/2	2	AMERICAN STANDARD	LYNBROOK	6601.012	WALL HUNG FLUSH VALVE, EXTENDED FRONT, WHITE VITREOUS CHINA WASHOUT FLUSH ACTION 1-1/4"TOP SPUD, 1 GALLON FLUSH, WITH INTEGRAL FLUSHING RIM, INTEGRAL TRAP AND TOTO MODEL #TEU1DNC-12 AUTOMATIC INFRARED SENSOR ACTIVATED BRONZE PISTON OPERATED URINAL FLUSH VALVE. HEAVY DUTY CHROME PLATED FINISH. VANDAL RESISTANT, FOUR AA BATTERIES POWER SOURCE, ANGLE STOP AND VACUUM BREAKER.
WC-1	WATER CLOSET	1 1/2	--	2	4	AMERICAN STANDARD	AFWALL	3351.001	WALL HUNG FLUSH VALVE, STANDARD HEIGHT, WHITE VITREOUS CHINA, ELONGATED BOWL, SIPHON JET, 1-1/2"TOP SPUD, 1.28 GALLON FLUSH, WITH TOTO SENSOR TOILET FLUSH VALVE TOP SPUD WALL MOUNT MODEL TET1DNC-32 AUTOMATIC INFRARED SENSOR, ACTIVATED BRONZE PISTON OPERATED TOILET VALVE HEAVY DUTY CHROME PLATED FINISHED, VANDAL RESISTANT, FOUR AA BATTERIES POWER SOURCE, 1.28 GPF WITH A MANUAL OVERRIDE BUTTON WITH ANGLE STOP AND VACUUM BREAKER. CHURCH 9500 NSSC WHITE OPEN FRONT ANATORMINAL SEAT WITH SELF-SUSTAINING AND CONCEALED CHECK HINGES.
WC-2	WATER CLOSET	1 1/2	--	2	4	AMERICAN STANDARD	AFWALL	3351.001	SAME AS WC-1, EXCEPT MOUNTED AT ADA HEIGHT.A. SAME AS WC-1, EXCEPT MOUNTED AT ADA HEIGHT.

SHOCK ARRESTOR SCHEDULE

SYMBOL	FIXTURE UNITS	PIPE SIZE	ZURN SHOCK STOP NUMBER
A	1-11	3/4"	100
B	12-32	1"	200
C	33-60	1"	300
D	61-113	1"	400

NOTE:

WHERE ⬡ SYMBOL OCCURS ON THE PLUMBING PLANS OR PLUMBING DETAIL SHEETS, REFER TO SHOCK ARRESTOR SCHEDULE ABOVE.

BID DOCUMENTS ONLY
Document Incomplete: Not intended for permit or construction.
Engineer: N. Curt Jones, P.E.
P.E. Serial No.: 58428
Date: August 4, 2015

HOUSTON AIRPORT SYSTEM

APPROVED

HOUSTON AIRPORT SYSTEM DIRECTOR OR DESIGNATED PDC REPRESENTATIVE — DATE

JACOBS
5985 Rogerdale Road
Houston, Texas
77072

[P] 832.351.6000
[F] 281.776.2501
[W] www.jacobs.com

TBPE Firm #2966

Consultants:

JONES ENGINEERS, L.P.
Texas Registered Engineering Firm #F-3811
9820 Whithorn Drive
Houston, Texas 77095
[T] (713)222-7766
[F] (281)500-8160

Seals:

Project Client:
Houston Airport System
Project Address

Program Management Office

George Bush
Intercontinental Airport (IAH)

115 Standifer St.
Humble, TX 77338

Number	Description	Date
	95% REVIEW OF BRIDGING DOCUMENTS	21 MAY 2015
	100% BRIDGING DOCUMENTS	4 AUG 2015

Project No.:

Copyright: 2015 Jacobs Engineering

TDLR #:

Drawing Sheet Title:

PLUMBING DETAILS

Drawing Sheet Number:

P3.01

Owner's Drawing Sheet No.:

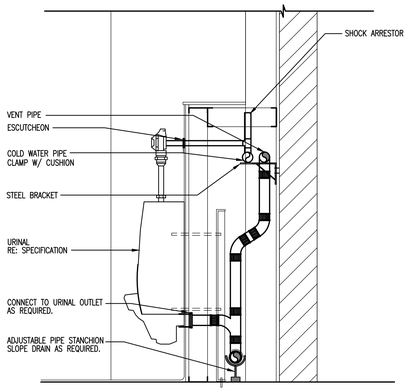

01 URINAL PIPING DETAIL
SCALE: NOT TO SCALE

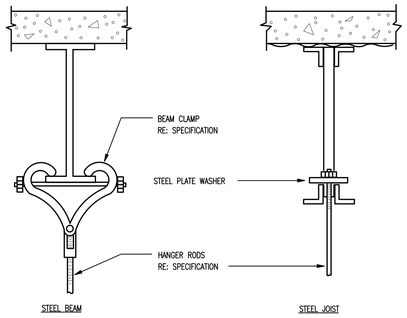

04 TYPICAL PIPE AND DUCT SUPPORT ATTACHMENT
SCALE: NOT TO SCALE

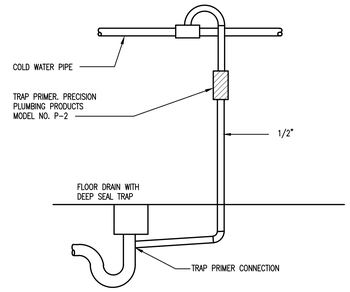

06 TRAP PRIMER DETAIL
SCALE: NOT TO SCALE

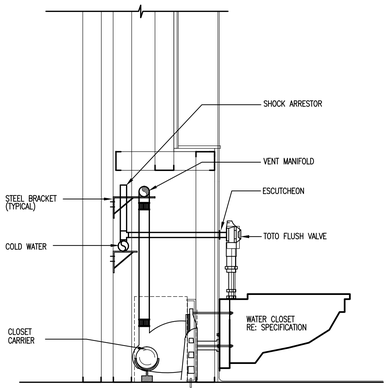

02 CLOSET PIPING DETAIL
SCALE: NOT TO SCALE

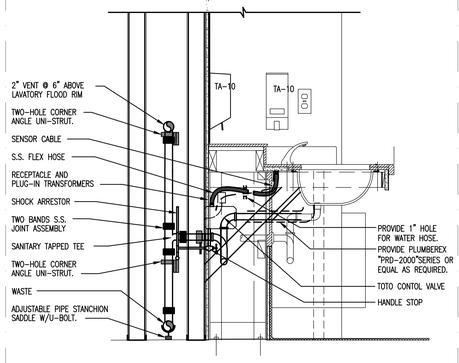

05 LAVATORY DETAIL
SCALE: NOT TO SCALE

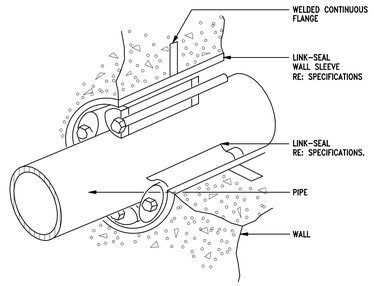

07 TYPICAL WATERTIGHT PIPE PENETRATION
SCALE: NOT TO SCALE

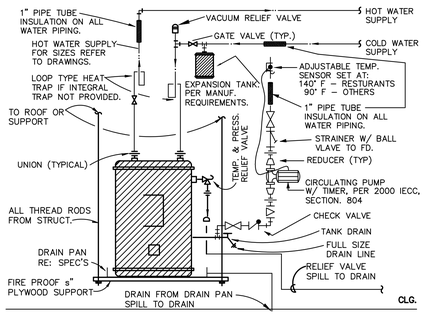

03 ELECTRIC WATER HEATER DETAIL
SCALE: NOT TO SCALE

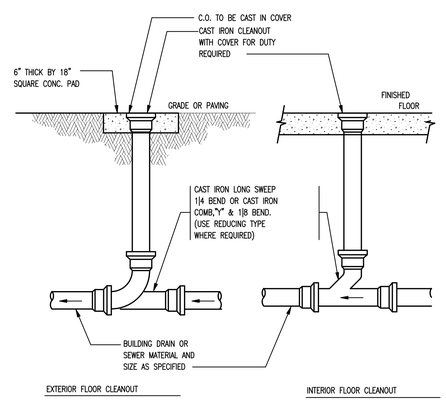

08 CLEAN OUT
SCALE: NOT TO SCALE

BID DOCUMENTS ONLY
Document Incomplete: Not intended for permit or construction.
Engineer: N. Curt Jones, P.E.
P.E. Serial No.: 58428
Date: August 4, 2015

HOUSTON AIRPORT SYSTEM

APPROVED

HOUSTON AIRPORT SYSTEM
DIRECTOR OR DESIGNATED
PDC REPRESENTATIVE
DATE

JACOBS
5985 Rogerdale Road
Houston, Texas
77072

[P] 832.351.6000
[F] 281.776.2501
[W] www.jacobs.com

TBPE Firm #2966

Consultants:

JONES
ENGINEERS, L.P.
Texas Registered Engineering Firm #F-3811

9820 Whithorn Drive
Houston, Texas 77095
[T] (713)222-7766
[F] (281)500-8160

Seals:

Project Client:
Houston Airport System
Project Address

Program Management Office

George Bush
Intercontinental Airport (IAH)

115 Standifer St.
Humble, TX 77338

Number	Description	Date
	95% REVIEW OF BRIDGING DOCUMENTS	21 MAY 2015
	100% BRIDGING DOCUMENTS	4 AUG 2015

Project No.:

Copyright: 2015 Jacobs Engineering

TDLR #:

Drawing Sheet Title:

PLUMBING
DETAILS

Drawing Sheet Number:

P3.02

Owner's Drawing Sheet No.:

ABBREVIATIONS

A

A	AMPS, AIR (COMPRESSED)
ABV	ABOVE
A|C	AIR CONDITIONING
AC	ALTERNATING CURRENT, AIR COMPRESSOR
ACI	AMERICAN CONCRETE INSTITUTE
AD	ACCESS DOOR
ADJ	ADJUSTABLE
AF	AIR FILTER
AFC	ABOVE FINISHED CEILING
AFF	ABOVE FINISHED FLOOR
AFG	ABOVE FINISHED GRADE
AHU	AIR HANDLING UNIT
AL	ALUMINUM
AMB	AMBIENT
AP	ACCESS PANEL
APD	AIR PRESSURE DROP
ARCH	ARCHITECT, ARCHITECTURAL
ARI	AMERICAN REFRIGERATION INSTITUTE
ASHRAE	AMERICAN SOCIETY OF HEATING AND REFRIGERATION ENGINEERS
ASME	AMERICAN SOCIETY OF MECHANICAL ENGINEERS
ASTM	AMERICAN SOCIETY OF TESTING AND MATERIALS
AV	AIR VENT
AVG	AVERAGE
AWS	AMERICAN WELDING SOCIETY
AUX	AUXILIARY

B

BFV	BUTTERFLY VALVE
BLDG	BUILDING
BOS	BOTTOM OF STRUCTURE
BTU	BRITISH THERMAL UNIT
BV	BALL VALVE

C

C	CELSIUS
CAB	CABINET
CFM	CUBIC FEET PER MINUTE
CFS	CUBIC FEET PER SECOND
CHP	CHILLED WATER PUMP
CHR	CHILLED WATER RETURN
CHS	CHILLED WATER SUPPLY
CIRC	CIRCULATING
CL	CENTERLINE
CLG	CEILING
CLR	CLEAR
CO	CLEAN OUT
COL	COLUMN
COMP	COMPRESSOR
CON	CONVERTER
CONC	CONCRETE, CONCENTRIC
COND	CONDENSER, CONDENSATE
CONN	CONNECTION
CONT	CONTINUOUS, CONTINUATION
CONTR	CONTROLLER, CONTRACTOR
CR	CONDENSATE RETURN
CRT	CATHODE RAY TUBE
CRU	CONDENSATE RETURN UNIT
CTR	CENTER
CU	COPPER
CW	COLD WATER
C_v	CAPACITY INDEX
CV	CHECK VALVE

D

D	DEPTH, DRAIN
Db	DECIBEL
DB	DRY BULB
DC	DIRECT CURRENT
DDC	DIRECT DIGITAL CONTROL
DESIG	DESIGNATION
DET	DETAIL
DIA	DIAMETER
DIFF	DIFFUSER
DIM	DIMENSION
DL	DOOR LOUVER
DN	DOWN
DPR	DAMPER
DS	DOUBLE SUCTION
DWG	DRAWING
DX	DIRECT EXPANSION
DXFC	DX FAN COIL UNIT

E

EA	EACH
EAT	ENTERING AIR TEMPERATURE
EC	ELECTRICAL CONTRACTOR
ECC	ECCENTRIC
EDB	ENTERING DRY BULB
EF	EXHAUST FAN
EFF	EFFICIENCY
EJ	EXPANSION JOINT
EL	EXPANSION LOOP
ELEC	ELECTRICAL
ELEV	ELEVATOR
ENGR	ENGINEER
EQ	EQUAL
EQUIP	EQUIPMENT
ES	END SUCTION
ESP	EXTERNAL STATIC PRESSURE
ET	EXPANSION TANK
ETR	EXISTING TO REMAIN
EVAP	EVAPORATOR
EWB	ENTERING WET BULB
EWT	ENTERING WATER TEMPERATURE
EX	EXPLOSION-PROOF
EXH	EXHAUST
EXT	EXTERNAL
EXTG	EXISTING

F

F	FARENHEIT, FAN
FACP	FIRE ALARM CONTROL PANEL
FBO	FURNISHED BY OTHERS
FCMS	FACILITY CONTROL MANAGEMENT SYSTEM
FCU	FAN COIL UNIT
FD	FIRE DAMPER
FF	FINAL FILTER
FLA	FULL LOAD AMPS
FLEX	FLEXIBLE
FLR	FLOOR
FT	FOOT, FEET
FUT	FUTURE

G

G	GAS
GA	GAGE
GAL	GALLON
GALV	GALVANIZED
GC	GENERAL CONTRACTOR
GND	GROUND
GPH	GALLONS PER HOUR
GPM	GALLONS PER MINUTE
GR	GRILLE
GSH	GRAND SENSIBLE HEAT
GTH	GRAND TOTAL HEAT

H

H	HUMIDIFIER, HEIGHT
HC	HEATING COIL
HD	HEAD
HE	HEAT EXCHANGER
HORIZ	HORIZONTAL
HP	HORSEPOWER, HIGH PRESSURE
HKP	HOUSEKEEPING PAD
HSC	HORIZONTAL SPLIT CASE
HSTAT	HUMIDISTAT
HSTM	HIGH PRESSURE STEAM
HSZBT	HORIZONTAL SINGLE-ZONE BLOW-THRU
HSZDT	HORIZONTAL SINGLE-ZONE DRAW-THRU
HTG	HEATING
HTR	HEATER
HUH	HOT WATER
HV	HIGH VELOCITY
HVAC	HEATING, VENTILATING, AND AIR CONDITIONING
HVU	HEATING AND VENTILATING UNIT
HZ	HERTZ

I

ID	INSIDE DIAMETER
IN	INCH
INSUL	INSULATION
INT	INTERNAL, INTERIOR

K

KVA	KILOVOLT-AMPS
KW	KILOWATT

L

L	LENGTH
LAT	LEAVING AIR TEMPERATURE
LDB	LEAVING DRY BULB
LF	LINEAR FEET
LP	LOW PRESSURE
LRA	LOCKED ROTOR AMPS
LSTM	LOW PRESSURE STEAM
LVL	LEVEL
LWB	LEAVING WET BULB
LWT	LEAVING WATER TEMPERATURE

M

M	METER
MAX	MAXIMUM
MBH	THOUSAND OF BTU'S
MC	MECHANICAL CONTRACTOR
MECH	MECHANICAL
MFR	MANUFACTURER
MIN	MINIMUM
MP	MEDIUM PRESSURE
MSTM	MEDIUM PRESSURE STEAM
MTD	MOUNTED
MU	MAKE-UP
MVD	MANUAL VOLUME DAMPER

N

N.C.	NORMALLY CLOSED
NFPA	NATIONAL FIRE PROTECTION ASSOCIATION
NIC	NOT IN CONTRACT
N.O.	NORMALLY OPEN
NO.	NUMBER
NTS	NOT TO SCALE

O

OA	OUTSIDE AIR
OBD	OPPOSED BLADE DAMPER
OC	ON CENTER
OD	OUTSIDE DIAMETER
OPG	OPENING

P

P	PUMP
PC	PLUMBING CONTRACTOR
PCR	PUMPED CONDENSATE RETURN
PCHP	PRIMARY CHILLED WATER PUMP
PCHR	PRIMARY CHILLED WATER RETURN
PCHS	PRIMARY CHILLED WATER SUPPLY
PD	PRESSURE DROP
PH	PHASE
PLBG	PLUMBING
PNEU	PNEUMATIC
PNL	PANEL
PNTH	PENTHOUSE
PRI	PRIMARY
PRS	PRESSURE REDUCING STATION
PRV	PRESSURE REDUCING VALVE
PSF	POUNDS PER SQUARE FOOT
PSI	POUNDS PER SQUARE INCH
PSIG	POUNDS PER SQUARE INCH GUAGE
PV	PLUG VALVE
PVC	POLYVINYL CHLORIDE

Q

QTY	QUANTITY

R

RA	RETURN AIR
RAD	REFRIGERATED AIR DRYER
RAF	RETURN AIR FAN
RAG	RETURN AIR GRILL
RCP	REFLECTED CEILING PLAN
RE:	REFERENCE, REFER
RECIRC	RECIRCULATE
RED	REDUCER
REG	REGISTER
REINF	REINFORCING
REQD	REQUIRED
REV	REVISION, REVISE
RH	RELATIVE HUMIDITY
RKVA	RUNNING KILOVOLT-AMPS
RKW	RUNNING KILOWATTS
RLA	RUNNING LOAD AMPS
RM	ROOM
RPM	REVOLUTIONS PER MINUTE
RV	RELIEF VALVE

S

SA	SUPPLY AIR
SAF	SUPPLY AIR FAN
SC	STEAM CONVERTER
SCHED	SCHEDULED
SCHP	SECONDARY CHILLED WATER PUMP
SCHR	SECONDARY CHILLED WATER RETURN
SCHS	SECONDARY CHILLED WATER SUPPLY
SCR	SILICON CONTROLLED RECTIFIER
SEC	SECONDARY
SECT	SECTION
SENS	SENSIBLE
SF	SQUARE FEET
SHT	SHEET
SIM	SIMILAR
SM	SHEET METAL
SP	STATIC PRESSURE
SPEC	SPECIFICATION
SPF	STAIR PRESSURIZATION FAN
SQ	SQUARE
SRF	SMOKE REMOVAL FAN
ST	SOUND TRAP, STEAM TRAP
STD	STANDARD
STL	STEEL
STM	STEAM
STR	STRAINER
SURF	SURFACE
SUSP	SUSPEND

T

TC	TEMPERATURE CONTROL
TDH	TOTAL DYNAMIC HEAD
TF	TRANSFER FAN
TH BLK	THRUST BLOCK
TP	TOTAL PRESSURE
TSP	TOTAL STATIC PRESSURE
TSTAT	THERMOSTAT
TU	TERMINAL UNIT
TXV	THERMAL EXPANSION VALVE
TYP	TYPICAL

U

UG	UNDERGROUND
UH	UNIT HEATER
UL	UNDERWRITERS LABORATORIES, INC
UON	UNLESS OTHERWISE NOTED
U|F	UNDERFLOOR
U|S	UNDERSLAB

V

V	VOLT, VENT
VA	VOLT-AMPERE, VARIABLE AIR VOLUME
VAV	VARIABLE AIR VOLUME
VD	VOLUME DAMPER
VEL	VELOCITY
VERT	VERTICAL
VFD	VARIABLE FEQUENCY DRIVE
VTR	VENT THRU ROOF

W

W	WATT, WIDTH
W|	WITH
W|O	WITHOUT
WB	WET BULB
WM	WATER METER
WP	WEATHERPROOF
WPD	WATER PRESSURE DROP
WWF	WELDED WIRE FABRIC
WT	WATERTIGHT, WEIGHT

Z

Z	ZONE

MECHANICAL SYMBOLS (ALL SYMBOLS SHOWN ARE NOT NECESSARILY USED ON THE DRAWINGS)

PIPING TYPES

—— CHS ——	CHILLED WATER SUPPLY
—— CHR ——	CHILLED WATER RETURN
—— PCHS ——	PRIMARY CHILLED WATER SUPPLY
—— PCHR ——	PRIMARY CHILLED WATER RETURN
—— SCHS ——	SECONDARY CHILLED WATER SUPPLY
—— SCHR ——	SECONDARY CHILLED WATER RETURN
—— HSTM ——	HIGH PRESSURE STEAM (100 PSI)
—— MSTM ——	MEDIUM PRESSURE STEAM (60 PSI)
—— LSTM ——	LOW PRESSURE STEAM (12 PSI)
—— PCR ——	PUMPED CONDENSATE RETURN
—— CR ——	GRAVITY CONDENSATE RETURN
—— D ——	DRAIN
—— A ——	COMPRESSED AIR
—— MU ——	MAKE-UP WATER
· · aaa · ·	EXISTING PIPE, "aaa" DENOTES TYPE
· X · aaa · X ·	EXISTING PIPE TO BE REMOVED, "aaa" DENOTES TYPE

PIPING SYMBOLS

	FLOW DIRECTION FOR PUMPED WATER LINES SLOPE FOR STEAM AND GRAVITY CONDENSATE LINES
	ELBOW UP
	ELBOW DOWN
	CONCENTRIC REDUCER
	ECCENTRIC REDUCER
	TEE OUTLET UP
	TEE OUTLET DOWN
	UNION
	PIPE ANCHOR
	EXPANSION JOINT
	STRAINER WITH BLOWDOWN VALVE
	BALANCING VALVE WITH DIFFERENTIAL PRESSURE TAPS
	BALANCING|STOP VALVE
	CHECK VALVE
	TWO POSITION CONTROL VALVE
	TWO-WAY MODULATING CONTROL VALVE
	THREE-WAY MODULATING CONTROL VALVE
	MANUAL AIR VENT
	AUTOMATIC AIR VENT
	PRESSURE RELIEF VALVE
	PRESSURE AND TEMPERATURE TAP
	PRESSURE GAUGE WITH GAUGE COCK
	THERMOMETER
	WATER METER
	PRESSURE REDUCING VALVE
	FLEXIBLE CONNECTION
	FLOW VENTURI
	THERMOMETER WELL
	FLOW ORIFICE
	STEAM CONDENSATE METER

MISCELLANEOUS

T	THERMOSTAT
F	FIRESTAT
D RA	DUCT SMOKE DETECTOR. "SA" DENOTES SUPPLY AIR, "RA" DENOTES RETURN AIR
FS	FLOW SWITCH
	PNEUMATIC TUBING OR CONTROL WIRING
1	DRAWING NOTE REFERENCE

DUCTWORK

	SUPPLY AIR DIFFUSER
	RETURN AIR OR EXHAUST GRILL
	SUPPLY AIR SLOT
	RETURN AIR SLOT
18/12 C 16/10 H	RECTANGULAR DUCTWORK "C" DENOTES COLD SUPPLY AIR DUCT AND "H" DENOTES HOT AIR SUPPLY DUCT
18"~	ROUND DUCTWORK "C" DENOTES COLD SUPPLY AIR DUCT AND "H" DENOTES HOT AIR SUPPLY DUCT
18/12 O-C 16/10 O-H	FLAT OVAL DUCTWORK "C" DENOTES COLD SUPPLY AIR DUCT AND "H" DENOTES HOT AIR SUPPLY DUCT
	FLEXIBLE DUCT
	SUPPLY OR OUTSIDE AIR DUCT
	RETURN, RELIEF, OR EXHAUST AIR DUCT
	FLEXIBLE DUCT CONNECTION
	SUPPLY OR OUTSIDE AIR DUCT UP
	SUPPLY OR OUTSIDE AIR DUCT DOWN
	RETURN, RELIEF, OR EXHAUST AIR DUCT UP
	RETURN, RELIEF, OR EXHAUST AIR DUCT DOWN
	IN-LINE 90# RISE (DROP) IN DUCT
UP	INCLINED RISE IN DUCT
DN	INCLINED DROP IN DUCT
	RECTANGULAR SMOOTH RADUIS ELBOW WITH VANES
	TURNING VANES
	SPLITTER DAMPER
J	MIXING LATERAL TERMINAL UNIT (PLAN VIEW)
J	MIXING LATERAL TERMINAL UNIT (SIDE VIEW)
	FIRE DAMPER
	FIRE DAMPER (VERTICAL)
S	SMOKE DAMPER
FS	FIRE|SMOKE DAMPER
	MANUAL VOLUME/BALANCING DAMPER
B	GRAVITY BACKDRAFT DAMPER
M	MOTORIZED DAMPER
	PEUMATIC CONTROL DAMPER

DESIGN CONDITIONS + FACTORS

OUTDOOR CONDITIONS

SUMMER: 96F. DB & 80F. WB

WINTER: 28F.

INDOOR CONDITIONS

OFFICES, CLASSROOMS

SUMMER: 74|F. DB & 50% RH
WINTER: 72|F.

AIR LOAD FACTORS

FAN MOTOR - FULL LOAD HORSEPOWER
DUCT LEAKAGE - 2%
CONTINGENCY - 15%

A. CONVERT TO ACTUAL BTU|HR AND INCREASE COOLING COIL CAPACITY AS REQUIRED.
B. AIR HANDLING UNIT, MOTOR HORSEPOWER, AND DUCTWORK SHALL BE ADEQUATE SIZE TO PROVIDE 15% ADDITIONAL AIR CAPACITY IF REQUIRED FOR TENANT FLEXIBILITY.

GENERAL NOTES

1. THE DRAWINGS ARE DIAGRAMMATIC IN NATURE AND WERE MADE FROM THE BEST INFORMATION AVAILABLE. CONFIRM ALL LOCATIONS AND DIMENSIONS IN THE FIELD. VISIT THE SITE PRIOR TO BID. THE CONTRACTOR WILL BE RESPONSIBLE FOR THE CONDITIONS AS THEY EXIST AND NO ADDITIONAL COSTS WILL BE ALLOWED FOR READILY OBSERVABLE CONDITIONS.
2. GUARANTEE LABOR AND MATERIALS FOR 1 YEAR.
3. COORDINATE THE LOCATION OF ALL AIR DISTRIBUTION DEVICES WITH THE ARCHITECTURAL REFLECTED CEILING PLAN INCLUDING LIGHT FIXTURES AND LIFE SAFETY DEVICES.
4. VERIFY LOCATION OF THERMOSTATS/TEMPERATURE SENSORS WITH THE ARCHITECT/ENGINEER PRIOR TO INSTALLATION TO COORDINATE WITH THE LATEST FURNITURE AND MILLWORK PLANS. INSTALL DEVICES AT 48" AFF, UNLESS NOTED OTHERWISE ON THE PLANS.
5. ALL WORK SHALL COMPLY WITH THE LOCAL BUILDING, PLUMBING, AND MECHANICAL CODES, NFPA 90A, AND ANY OTHER APPLICABLE CODES.
6. ALL LOCATIONS OF DEVICES ARE APPROXIMATE. SEE ARCHITECTURAL DRAWINGS FOR EXACT LOCATIONS.
7. SEAL NEW OR EXISTING PENETRATIONS IN OF FLOORS, RATED PARTITIONS, AND CORRIDOR WALLS.
8. SECURE ALL PERMITS AND PROVIDE ANY REQUIRED TEMPORARY UTILITIES.
9. ALL WORK AND SERVICE INTERRUPTIONS SHALL BE COORDINATED WITH THE OWNER SUCH THAT THE WORK IS PERFORMED AT THE OWNERS CONVENIENCE. THIS MAY BE DURING EVENINGS AND WEEKENDS.
10. CONTRACTOR TO PROVIDE "AS-BUILT" DRAWINGS INDICATING THE CONFIGURATION OF THE CONSTRUCTED WORK.
11. SUBMIT INFORMATION ON ALL NEW EQUIPMENT IN THE FORM OF SHOP DRAWINGS. REFER TO ARCHITECTURAL SPECIFICATIONS FOR THE CORRECT PROCEDURE. PROVIDE AIR BALANCE REPORT AND SUBMIT FOR APPROVAL.
12. PROVIDE 3 COPIES OF THE OPERATION AND MAINTENANCE MANUALS TO THE OWNER. PROVIDE INSTRUCTION ON THE SYSTEM OPERATION TO THE OWNER.
13. FLEX DUCT LENGTH NOT TO EXCEED 6'-0". PROVIDE MANUAL DAMPER AT ALL TAKE-OFFS.
14. ALL DUCTWORK SHALL BE INSTALLED IN ACCORDANCE WITH THE LATEST SMACNA STANDARDS. DUCTWORK SHALL BE GALVANIZED STEEL WITH MIN R-8 EXTERNAL FIBERGLASS INSULATION AND FOIL VAPOR BARRIER.
15. ALL DUCTWORK DIMENSIONS ARE CLEAR INSIDE DIMENSIONS.
16. TURNING VANES ARE REQUIRED AT EACH TURN IN THE DUCT. EXTRACTORS ARE REQUIRED AT EACH SPLIT.

CITY OF HOUSTON ENERGY CODE NOTES

ENERGY CODE NOTES

1. DUCT SEALING: DUCTWORK AND PLENUMS SHALL BE SEALED IN ACCORDANCE WITH THE CITY OF HOUSTON MECHANICAL CODE AND SMACNA METHOD A.

2. BALANCING: SYSTEM SHALL BE BALANCED IN ACCORDANCE WITH GENERALLY ACCEPTED ENGINEERING STANDARDS (NEBB 1999, AABC 2002, OR ASHRAE 111) AND PER APPENDIX E OF THE CITY OF HOUSTON COMMERCIAL ENERGY CONSERVATION CODE. AIR SYSTEMS SHALL BE IN A MANNER TO FIRST MINIMIZE THROTTLING LOSSES. THEN FOR FANS WITH FAN SYSTEM POWER GREATER THAN 1 HP, FAN SPEED SHALL BE ADJUSTED TO MEET DESIGN FLOW CONDITIONS.

3. ENERGY CODE COMPLETION REQUIREMENTS.

DRAWINGS: CONSTRUCTION DOCUMENTS SHALL REQUIRED THAT WITHIN 90 DAYS AFTER THE DATE OF SYSTEM ACCEPTANCE RECORD DRAWINGS OF THE ACTUAL INSTALLATION BE PROVIDED TO THE BUILDING OWNER OR THE DESIGNATED REPRESENTATIVE OF THE BUILDING OWNER. RECORD DRAWINGS SHALL INCLUDE AS A MINIMUM THE LOCATION AND PERFORMANCE DATA ON EACH PIECE OF EQUIPMENT, GENERAL CONFIGURATION OF DUCT AND PIPE DISTRIBUTION SYSTEM INCLUDING SIZES,AND THE TERMINAL AIR OR WATER DESIGN FLOW RATES.

MANUALS: CONSTRUCTION DOCUMENTS REQUIRE THAT AN OPERATING MANUAL AND A MAINTENANCE MANUAL BE PROVIDED TO THE BUILDING OWNER OR THE DESIGNATED REPRESENTATIVE OF THE BUILDING OWNER WITHIN 90 DAYS AFTER THE DATE OF SYSTEM ACCEPTANCE. THESE MANUALS SHALL BE IN ACCORDANCE WITH INDUSTRY ACCEPTED STANDARDS. AND SHALL INCLUDE AT A MINIMUM THE FOLLOWING:
(A) SUBMITTAL DATA STATING EQUIPMENT SIZE AND SELECTED OPTIONS FOR EACH PIECE OF EQUIPMENT REQUIRING MAINTENANCE.
(B) OPERATING MANUALS AND MAINTENANCE MANUALS FOR EACH PIECE OF EQUIPMENT REQUIRING MAINTENANCE, EXCEPT EQUIPMENT NOT FURNISHED AS PART OF THE PROJECT. REQUIRED ROUTINE MAINTENANCE SHALL BE CLEARLY IDENTIFIED.
(C) NAMES AND ADDRESSES OF AT LEAST ONE SERVICE AGENCY.
(D) HVAC CONTROLS SYSTEM MAINTENANCE AND CALIBRATION INFORMATION INCLUDING WIRING DIAGRAMS, SCHEMATICS AND CONTROL SEQUENCE DESCRIPTIONS. DESIRED OR FIELD DETERMINED SET POINTS SHALL BE PERMANENTLY RECORDED ON CONTROL DRAWINGS, AT CONTROL DEVICES OR FOR DIGITAL CONTROL SYSTEMS, IN THE PROGRAMMING COMMENTS.
(E) COMPLETE NARRATIVE OF HOW EACH SYSTEM IS INTENDED TO OPERATE, INCLUDING SUGGESTED SETPOINTS.

AUTOMATIC SHUTDOWN
HVAC SYSTEM SHALL BE EQUIPPED WITH CONTROLS THAT CAN START AND STOP THE SYSTEM UNDER DIFFERENT TIME SCHEDULES FOR SEVEN DIFFERENT TIMES PER WEEK, AND BE CAPABLE OF RETAINING PROGRAMMING AND TIME SETTING DURING LOSS OF POWER FOR A PERIOD OF LESS THAN 10 HOURS AND INCLUDE AN ACCESSIBLE MANUAL OVERRIDE, OR EQUIVALENT FUNCTION THE ALLOWS TEMPORARY OPERATION OF THE SYSTEM FOR TWO HOURS.

SHUTOFF DAMPER CONTROLS
BOTH OUTDOOR AIR SUPPLY AND EXHAUST SYSTEMS SHALL BE EQUIPPED WITH MOTORIZED DAMPERS THAT WILL AUTOMATICALLY SHUT WHEN THE SYSTEMS OR SPACES SERVED ARE NOT IN USE. VENTILATION OUTDOOR AIR DAMPERS SHALL BE CAPABLE OF AUTOMATICALLY SHUTTING OFF DURING PREOCCUPANCY BUILDING WARM UP, COOL DOWN AND SETBACK.

EXCEPTION - GRAVITY DAMPERS ARE ACCEPTABLE IN SYSTEMS WITH A DESIGN OUTDOOR AIR INTAKE OR EXHAUST CAPACITY OF 300 CFM OR LESS. WHEN REQUIRED MAXIMUM LEAKAGE RATE TO BE 0.3 CFM PER SQUARE FOOT.

NOTES:

1. DUCTWORK WITHIN THE BUILDING ENVELOPE WILL HAVE A MINIMUM INSULATION VALUE OF R-6, DUCTWORK LOCATED OUTSIDE OF THE BUILDING ENVELOPE WILL BE INSULATED WITH A MINIMUM OF R-8. DUCTWORK SHALL HAVE VAPOR RETARDERS WITH A PERM RATING NOT TO EXCEED 0.5 PERM. ALL JOINTS TO BE SEALED.

2. CONSTRUCTION - VENTILATING CEILINGS, SUSPENDED CEILING MATERIAL SHALL HAVE A CLASS 1 FLAME-SPREAD CLASSIFICATION ON BOTH SIDES, DETERMINED IN ACCORDANCE WITH THE BUILDING CODE. CEILING SUPPORTS SHALL BE OF NONCOMBUSTIBLE MATERIALS. LIGHTING FIXTURES RECESSED INTO VENTILATING CEILINGS SHALL BE OF A TYPE APPROVED FOR THAT PURPOSE.

3. APPLIANCES DESIGNED TO BE FIXED IN POSITION SHALL BE SECURELY FASTENED IN PLACE. SUPPORTS FOR APPLIANCES SHALL BE DESIGNED AND CONSTRUCTED TO SUSTAIN VERTICAL AND HORIZONTAL LOADS WITHIN THE STRESS LIMITATIONS SPECIFIED IN THE IBC, SECTION 304.4 - UNIFORM MECHANICAL CODE.

BID DOCUMENTS ONLY
Document Incomplete: Not intended for permit or construction.
Engineer: N. Curt Jones, P.E.
P.E. Serial No.: 58428
Date: August 4, 2015

HOUSTON AIRPORT SYSTEM

APPROVED

HOUSTON AIRPORT SYSTEM DIRECTOR OR DESIGNATED PDC REPRESENTATIVE — DATE

JACOBS
5985 Rogerdale Road
Houston, Texas
77072

[P] 832.351.6000
[F] 281.776.2501
[W] www.jacobs.com

TBPE Firm #2966

Consultants:

JONES ENGINEERS, L.P.
Texas Registered Engineering Firm #F-3811
9820 Whithorn Drive
Houston, Texas 77095
[T] (713)222-7766
[F] (281)500-8160

Seals:

Project Client:
Houston Airport System
Project Address

Program Management Office

George Bush Intercontinental Airport (IAH)

115 Standifer St.
Humble, TX 77338

Number	Description	Date
	95% REVIEW OF BRIDGING DOCUMENTS	21 MAY 2015
	100% BRIDGING DOCUMENTS	4 AUG 2015

Project No.:

Copyright: 2015 Jacobs Engineering

TDLR #:

Drawing Sheet Title:

MECHANICAL ABBREVIATION AND SYMBOLS

Drawing Sheet Number:

M0.01

Owner's Drawing Sheet No.:

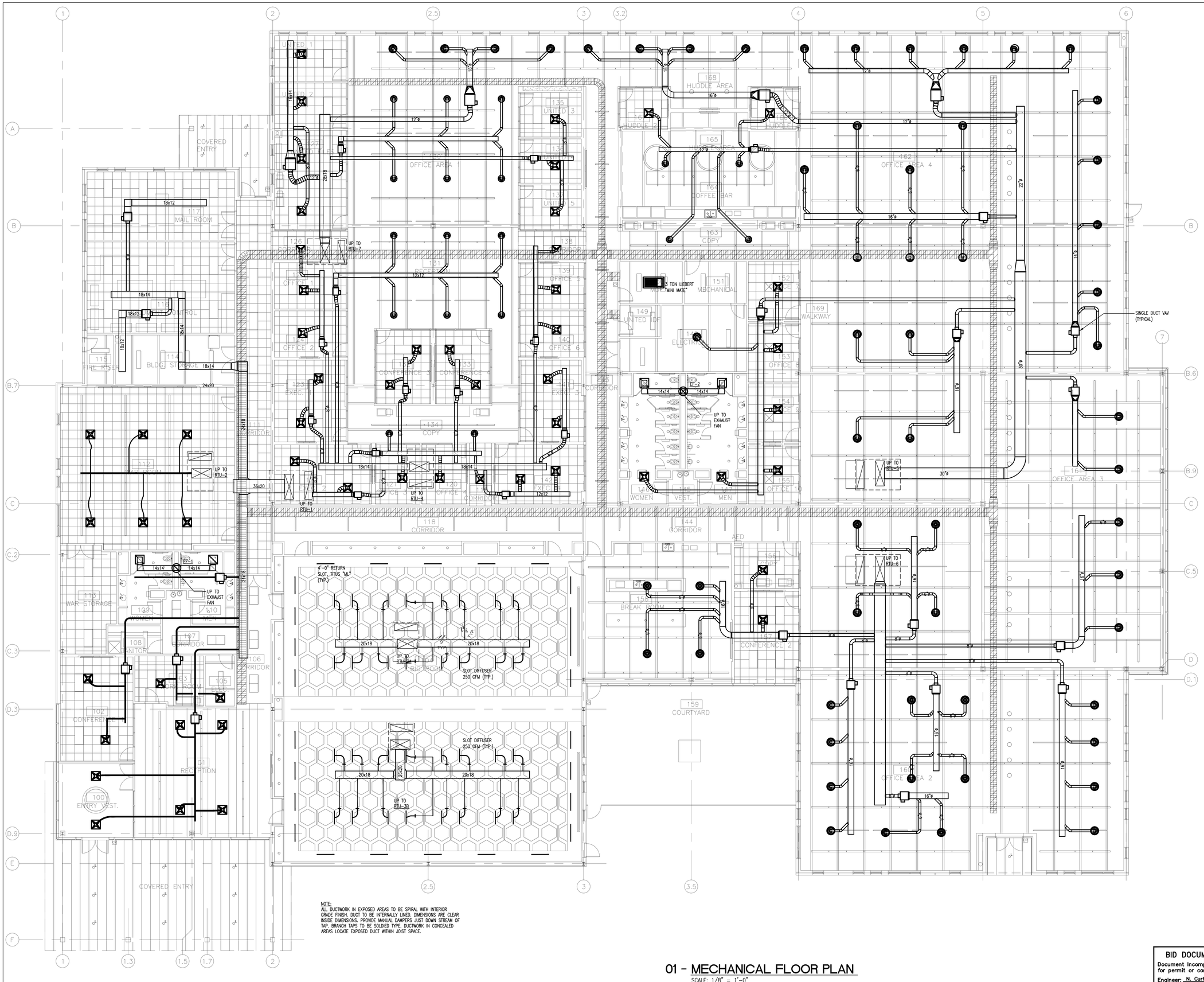

NOTE:
ALL DUCTWORK IN EXPOSED AREAS TO BE SPIRAL WITH INTERIOR GRADE FINISH. DUCT TO BE INTERNALLY LINED. DIMENSIONS ARE CLEAR INSIDE DIMENSIONS. PROVIDE MANUAL DAMPERS JUST DOWN STREAM OF TAP. BRANCH TAPS TO BE SOLDIED TYPE. DUCTWORK IN CONCEALED AREAS LOCATE EXPOSED DUCT WITHIN JOIST SPACE.

01 - MECHANICAL FLOOR PLAN

SCALE: 1/8" = 1'-0"

BID DOCUMENTS ONLY
Document Incomplete: Not intended for permit or construction.
Engineer: N. Curt Jones, P.E.
P.E. Serial No.: 58428
Date: August 4, 2015

HOUSTON AIRPORT SYSTEM

APPROVED

HOUSTON AIRPORT SYSTEM
DIRECTOR OR DESIGNATED
PDC REPRESENTATIVE

DATE

JACOBS
5985 Rogerdale Road
Houston, Texas
77072

[P] 832.351.6000
[F] 281.776.2501
[W] www.jacobs.com

TBPE Firm #2966

Consultants:

JONES ENGINEERS, L.P.
Texas Registered Engineering Firm #F-3811

9820 Whithorn Drive
Houston, Texas 77095
[T] (713)222-7766
[F] (281)500-8160

Seals:

Project Client:
Houston Airport System
Project Address

Program Management Office

George Bush
Intercontinental Airport (IAH)

115 Standifer St.
Humble, TX 77338

Number	Description	Date
	95% REVIEW OF BRIDGING DOCUMENTS	21 MAY 2015
	100% BRIDGING DOCUMENTS	4 AUG 2015

Key Plan

Project North

0 8 16 24
GRAPHIC SCALE: 1/8" = 1'-0"

Project No.:

Copyright: 2015 Jacobs Engineering

TDLR #:

Drawing Sheet Title:

MECHANICAL
FLOOR PLAN

Drawing Sheet Number:

M1.01

Owner's Drawing Sheet No.:

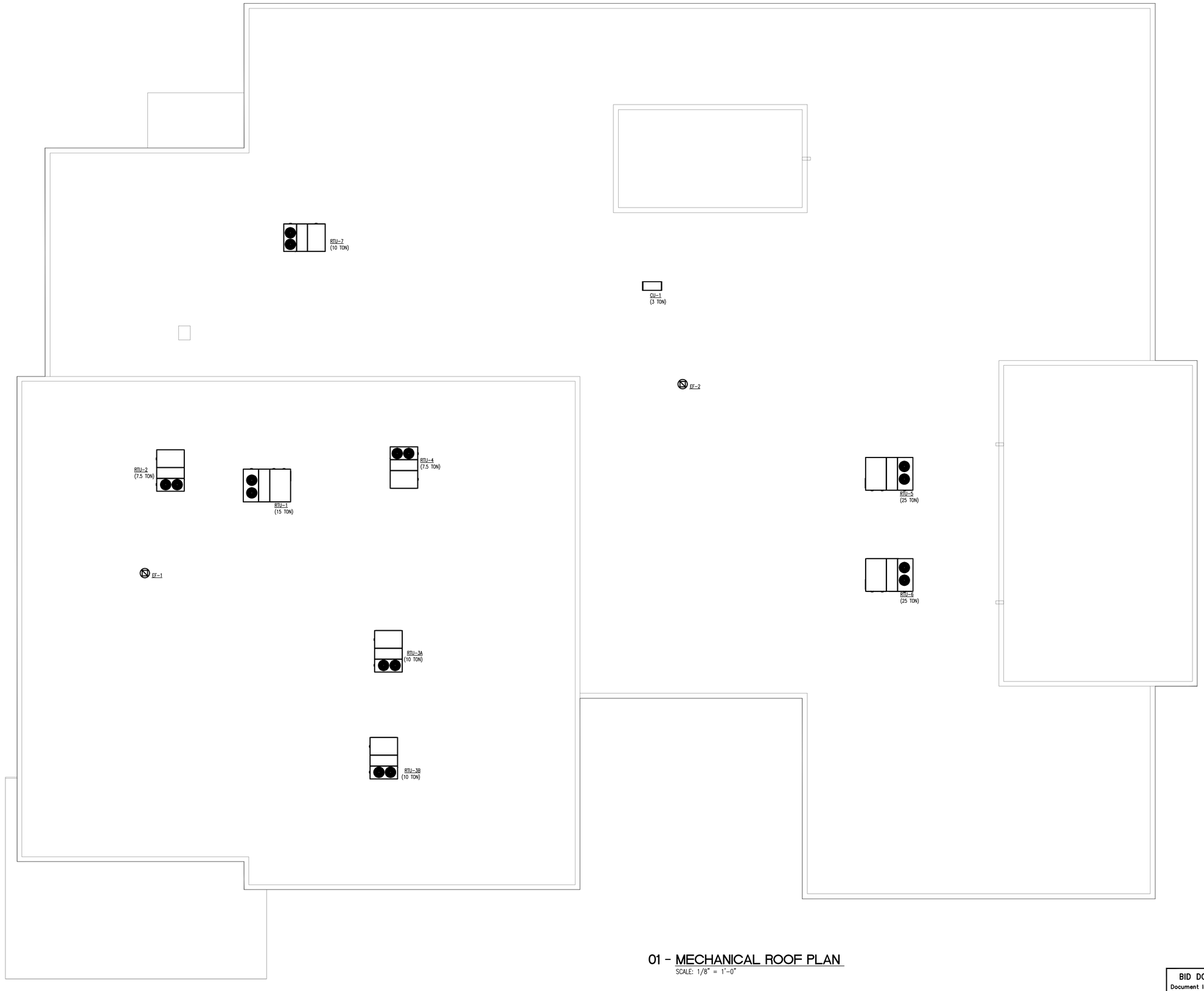

01 - MECHANICAL ROOF PLAN

SCALE: 1/8" = 1'-0"

BID DOCUMENTS ONLY

Document incomplete: Not intended for permit or construction.

Engineer: N. Curt Jones, P.E.

P.E. Serial No.: 58428

Date: August 4, 2015

HOUSTON AIRPORT SYSTEM

APPROVED

HOUSTON AIRPORT SYSTEM
DIRECTOR OR DESIGNATED
PDC REPRESENTATIVE

DATE

JACOBS

5985 Rogerdale Road
Houston, Texas
77072

[P] 832.351.6000
[F] 281.776.2501
[W] www.jacobs.com

TBPE Firm #2966

Consultants:

JONES
ENGINEERS, L.P.
Texas Registered Engineering Firm #F-3811

9820 Whithorn Drive
Houston, Texas 77095
[T] (713)222-7766
[F] (281)500-8160

Seals:

Project Client:

Houston Airport System

Project Address

Program Management Office

George Bush
Intercontinental Airport (IAH)

115 Standifer St.
Humble, TX 77338

Number	Description	Date
	95% REVIEW OF BRIDGING DOCUMENTS	21 MAY 2015
	100% BRIDGING DOCUMENTS	4 AUG 2015

Key Plan

Project North

0 8 16 24

GRAPHIC SCALE: 1/8" = 1'-0"

Project No.:

Copyright: 2015 Jacobs Engineering

TDLR #:

Drawing Sheet Title:

MECHANICAL
ROOF PLAN

Drawing Sheet Number:

M1.02

Owner's Drawing Sheet No.:

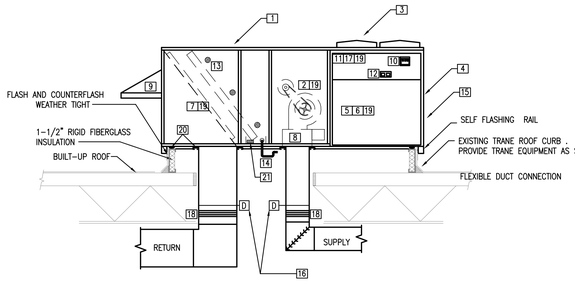

1. APPROVED RTU MANUFACTURERS:
   1. TRANE
   2. CARRIER
   3. YORK
2. INDOOR FAN: FORWARD CURVED, CENTRIFUGAL, BELT DRIVE WITH ADJUSTABLE MOTOR SHEAVES, GREASE LUBRICATED BALL BEARINGS AND MOTOR.
3. OUTSIDE COIL FAN: PROPELLER TYPE, DIRECTLY DRIVEN BY PERMANENTLY LUBRICATED MOTOR.
4. REFRIGERANT COILS: ALUMINUM-PLATE FIN AND SEAMLESS COPPER TUBE IN STEEL CASING. PROVIDE PHENOLIC EPOXY CORROSION PROTECTION COATING TO OUTSIDE COIL.
5. UNIT TO BE PROVIDED WITH 2 HERMETIC SCROLL COMPRESSORS WITH INTEGRAL VIBRATION ISOLATORS, INTERNAL OVERCURRENT AND OVER-TEMPERATURE PROTECTION, INTERNAL PRESSURE RELIEF AND CRANKCASE HEATERS.
6. THE REFRIGERATION SYSTEM SHALL BE EQUIPPED WITH EXPANSION VALVES WITH REPLACEABLE THERMOSTATIC ELEMENTS, FILTER DRYERS, HIGH AND LOW PRESSURE SWITCHES, COIL FREEZE PROTECTION, INDEPENDENT REFRIGERANT CIRCUITS, SERVICE VALVES AND TIMED OFF CONTROL.
7. PROVIDE 2" THICK PLEATED THROWAWAY FILTERS IN FACTORY FILTER RACK.
8. HEAT EXCHANGER: ALUMINIZED STEEL CONSTRUCTION FOR NATURAL GAS FIRED BURNERS WITH THE FOLLOWING CONTROLS:
   1. REDUNDANT DUAL GAS VALVE WITH MANUAL SHUT OFF.
   2. DIRECT SPARK PILOT IGNITION
   3. ELECTRONIC FLAME SENSOR.
   4. INDUCED DRAFT BLOWER.
   5. FLAME ROLLOUT SWITCH.
9. OUTSIDE AIR DAMPER: LINKED DAMPER PLADES, FOR 0 TO 25 PERCENT OUTSIDE AIR, WITH SPRING RETURN DAMPER MOTOR AND HOOD.
10. POWER CONNECTION: PROVIDE THROUGH THE CURB SINGLE POINT CONNECTION OF POWER WITH FACTORY INSTALLED UNIT MOUNTED DISCONNECT SWITCH ACCESSIBLE FROM OUTSIDE UNIT AND CONTROL CIRCUIT TRANSFORMER WITH BUILT IN CIRCUIT BREAKER.
11. THERMOSTAT: PROVIDE DIGITAL 7 DAY PROGRAMMABLE THERMOSTAT WITH 2-STAGE COOLING AND 2-STAGE HEATING OPERATION.
12. SERVICE OUTLETS: PROVIDE 2, 115-VOLT, GROUND FAULT CIRCUIT INTERRUPTER TYPE.
13. PROVIDE STERILAIRE UV-C EMMITERS DOWNSTREAM OF COOLING COIL. COVER ALL EXPOSED WIRES WITH UL181 ALUMINUM TAPE. [TILLMAN & ASSOC., 713/983-7999]
14. DRAIN PAN: STAINLESS STEEL WITH THROUGH THE CURB CONNECTION. PROVIDE COPPER "P" TRAP.
15. HAIL GUARD: STEEL, PAINTED TO MATCH CASING
16. PROVIDE SMOKE DETECTORS IN SUPPLY AND RETURN DUCTS. INTERLOCK WITH FAN OPERATION.
17. UNIT CONTROLS:
    1. DDC BUILDING MANAGEMENT SYSTEM WITH BACNET INTERFACE. ALLERTON, JCI OR EQUAL.
18. FLEXIBLE DUCT CONNECTOR.
19. PROVIDE HINGED PANEL FOR THIS SECTION.
20. APPLY FACTORY SUPPLIED GASKET AT ALL MATING SURFACES BETWEEN RTU AND CURB.
21. CONDENSATE LEVEL SENSING DEVICE IN PRIMARY DRAIN PAIN INTERLOCKED WITH UNIT OPERATION.

01 ROOF TOP UNIT DETAIL
NTS

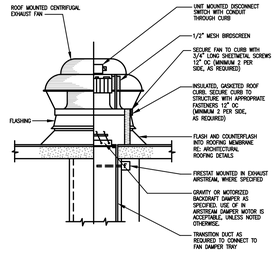

00 TYPICAL ROOF EXHAUST FAN
NTS

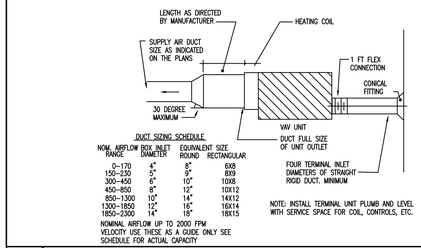

DUCT SIZING SCHEDULE

NOM. AIRFLOW RANGE	BOX INLET DIAMETER	EQUIVALENT SIZE ROUND	EQUIVALENT SIZE RECTANGULAR
0-170	4"	8"	6X8
150-230	5"	9"	8X9
300-450	6"	10"	10X8
450-850	8"	12"	10X12
850-1300	10"	14"	14X12
1300-1850	12"	16"	16X14
1850-2300	14"	18"	18X15

NOMINAL AIRFLOW UP TO 2000 FPM VELOCITY USE THESE AS A GUIDE ONLY SEE SCHEDULE FOR ACTUAL CAPACITY

NOTE: INSTALL TERMINAL UNIT PLUMB AND LEVEL WITH SERVICE SPACE FOR COIL CONTROLS, ETC.

02 SINGLE DUCT TERMINAL UNIT INSTALLATION
NTS

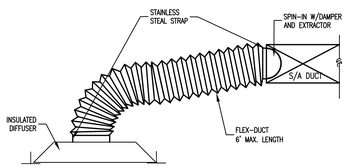

04 TYPICAL DIFFUSER DETAIL
NTS

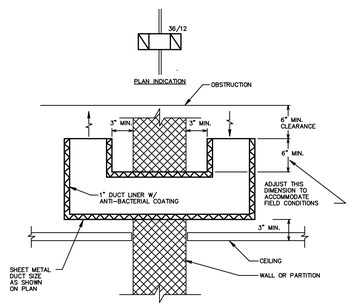

05 RETURN AIR TRANSFER DETAIL
NTS

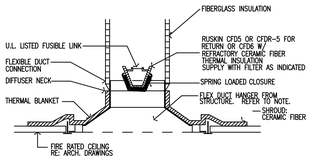

NOTE: REFER TO MANUFACTURER'S PRINTED INSTRUCTIONS FOR EXACT INSTALLATION REQUIREMENTS.

03 FIRE RATED DIFFUSER
NTS

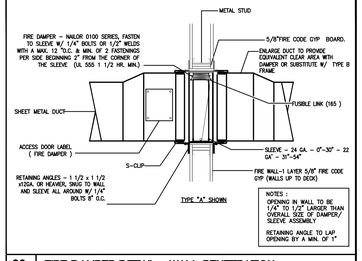

NOTES :
OPENING IN WALL TO BE 1/4" TO 1/2" LARGER THAN OVERALL SIZE OF DAMPER/ SLEEVE ASSEMBLY

RETAINING ANGLE TO LAP OPENING BY A MIN. OF 1"

06 FIRE DAMPER DETAIL - WALL PENETRATION
NTS

BID DOCUMENTS ONLY
Document incomplete: Not intended for permit or construction.
Engineer: N. Curt Jones, P.E.
P.E. Serial No.: 58428
Date: August 4, 2015

HOUSTON AIRPORT SYSTEM

APPROVED

HOUSTON AIRPORT SYSTEM DIRECTOR OR DESIGNATED PDC REPRESENTATIVE — DATE

JACOBS
5985 Rogerdale Road
Houston, Texas
77072

[P] 832.351.6000
[F] 281.776.2501
[W] www.jacobs.com

TBPE Firm #2966

Consultants:

JONES ENGINEERS, L.P.
Texas Registered Engineering Firm #F-3811
9820 Whithorn Drive
Houston, Texas 77095
[T] (713)222-7766
[F] (281)500-8160

Seals:

Project Client:
Houston Airport System
Project Address

Program Management Office

George Bush
Intercontinental Airport (IAH)

115 Standifer St.
Humble, TX 77338

Number	Description	Date
	95% REVIEW OF BRIDGING DOCUMENTS	21 MAY 2015
	100% BRIDGING DOCUMENTS	4 AUG 2015

Project No.:

Copyright: 2015 Jacobs Engineering

TDLR #:

Drawing Sheet Title:

MECHANICAL DETAILS

Drawing Sheet Number:

M3.01

Owner's Drawing Sheet No.:

ABBREVIATIONS

A

A	AMPS
ABV	ABOVE
A/C	AIR CONDITIONING
AC	ALTERNATING CURRENT, AIR COMPRESSOR
ACC	AIR COOLED CHILLER
ACCU	AIR COOLED CONDENSING UNIT
AD	ACCESS DOOR
ADJ	ADJUSTABLE
AF	AMPERE FUSE, AMPERE FRAME
AFC	ABOVE FINISHED CEILING
AFF	ABOVE FINISHED FLOOR
AFG	ABOVE FINISHED GRADE
AHU	AIR HANDLING UNIT
AIC	AMPERE INTERUPTING
AL	ALUMINUM
AM	AMMETER
AMB	AMBIENT
AP	ACCESS PANEL, ALARM PANEL
ARCH	ARCHITECT, ARCHITECTURAL
AS	AMMETER SWITCH
ASC	AMPERES SHORT CIRCUIT
AT	AMPERE TRIP RATING
ATS	AUTOMATIC TRANSFER SWITCH
AV	AREA VALVE
AVG	AVERAGE
AUX	AUXILIARY

B

BC	BELOW COUNTER
BCAS	BUILDING CONTROL AND AUTOMATION SYSTEM
BKR	BREAKER
BLDG	BUILDING
BOF	BOTTOM OF FOOTING
BOS	BOTTOM OF STRUCTURE

C

C	CONDUIT, CELSIUS
CAB	CABINET
CATV	CABLE TELEVISION SYSTEM
CCTV	CLOSED CIRCUIT TELEVISION
CDP	CONDENSER WATER PUMP
CH	CHILLER
CHP	CHILLED WATER PUMP
CIRC	CIRCULATING
CKT	CIRCUIT
CL	CENTERLINE
CLG	CEILING
CLR	CLEAR
CMU	CONCRETE MASONRY UNIT
COL	COLUMN
COMB	COMBINATION
CONC	CONCRETE
CONN	CONNECTION
CONT	CONTINUOUS, CONTINUATION
CONTR	CONTROLLER, CONTRACTOR
CPUC	CPU CHILLER
CR	CONSTANT VOLUME REHEAT
CRAC	COMPUTER ROOM A/C UNIT
CRT	CATHODE RAY TUBE
CRU	CONDENSATE RETURN UNIT
CT	CURRENT TRANSFORMER, COOLING TOWER
CTR	CENTER
CU	COPPER

D

D	DEPTH
Db	DECIBEL
DC	DIRECT CURRENT
DDC	DIRECT DIGITAL CONTROL
DEP	DEIONIZED WATER PUMP
DESIG	DESIGNATION
DET	DETAIL
DIA	DIAMETER
DIM	DIMENSION
DISC	DISCONNECT
DN	DOWN
DP	DISTRIBUTION PANEL
DPDT	DOUBLE-POLE, DOUBLE-THROW
DPST	DOUBLE-POLE,SINGLE-THROW
DW	DISHWASHER
DWG	DRAWING
DWH	DOMESTIC WATER HEATER
DWP	DOMESTIC WATER PUMP
DXFC	DX FAN COIL UNIT

E

EA	EACH
EC	ELECTRICAL CONTRACTOR
E.C.	EMPTY CONDUIT
EDF	ELECTRIC DRINKING FOUNTAIN
EF	EXHAUST FAN
EFF	EFFICIENCY
EHC	ELECTRIC HEATING COIL
EJ	EXPANSION JOINT
EL	ELEVATION
ELEC	ELECTRICAL
ELEV	ELEVATOR
EMERG	EMERGENCY
ENCL	ENCLOSURE
ENGR	ENGINEER
EPO	EMERGENCY POWER OFF
ETR	EXISTING TO REMAIN
EXH	EXHAUST
EXTG	EXISTING

F

F	FARENHEIT, FAN, FIRE
FA	FIRE ALARM
FACP	FIRE ALARM CONTROL PANEL
FCU	FAN COIL UNIT

F (CONTINUED)

FLEX	FLEXIBLE
FLR	FLOOR
FLUOR	FLUORESCENT
FOP	FUEL OIL PUMP
FP	FIRE PUMP, FAN POWERED
FRZR	FREEZER
FS	FUSED SWITCH, FLOW SWITCH
FT	FOOT, FEET
FTL	FEED-THRU LUGS
FUT	FUTURE
FVNR	FULL-VOLTAGE, NON-REVERSING

G

GA	GAGE
GAL	GALLON
GALV	GALVANIZED
GC	GENERAL CONTRACTOR
GEN	GENERATOR
GFI	GROUND FAULT INTERUPTER
GFCI	GROUND FAULT CIRCUIT INTERUPTER
GND	GROUND

H

H	HUMIDIFIER, HEIGHT
HOA	HAND-OFF-AUTOMATIC
HORIZ	HORIZONTAL
HP	HORSEPOWER
HKP	HOUSEKEEPING PAD
HPS	HIGH PRESSURE SODIUM
HTG	HEATING
HTR	HEATER
HUH	HOT WATER/GAS UNIT HEATER
HVAC	HEATING, VENTILATING, AND AIR CONDITIONING
HVU	HEATING/VENTILATING UNIT
HWB	HOT WATER BOILER
HWC	HOT WATER CIRCULATOR
HWP	HEATING WATER PUMP
HZ	HERTZ

I

ID	INSIDE DIAMETER
IF	INTERMITTANT FAN
IN	INCH
INCAND	INCANDESCENT
INT	INTERNAL, INTERIOR

J

JB	JUNCTION BOX
JP	JOCKEY PUMP

K

KEC	KITCHEN EQUIPMENT CONTRACTOR
KO	KNOCKOUT
KVA	KILOVOLT-AMPS
KW	KILOWATT
KWH	KILOWATT-HOUR

L

L	LENGTH
LF	LINEAR FEET
LRA	LOCKED ROTOR AMPS
LTG	LIGHTING
LVL	LEVEL

M

M	METER
MAP	MASTER ALARM PANEL
MATV	MASTER ANTENNA TELEVISION SYSTEM
MAX	MAXIMUM
MC	MECHANICAL CONTRACTOR
MCB	MAIN CIRCUIT BREAKER
MCC	MOTOR CONTROL CENTER
MDP	MAIN DISTRIBUTION PANEL
MECH	MECHANICAL
MFR	MANUFACTURER
MG	MOTOR GENERATOR
MH	MANHOLE, METAL HALIDE
MIC	MICROPHONE
MIN	MINIMUM
MLO	MAIN LUGS ONLY
MP	MEDICAL AIR PURIFIER
MSB	MAIN SWITCHBOARD
MTD	MOUNTED
MV	MERCURY VAPOR
MVA	MEGAVOLT-AMPERES

N

N.C.	NORMALLY CLOSED
NEC	NATIONAL ELECTRICAL CODE
NEMA	NATIONAL ELECTRICAL MANUFACTURER'S ASSOCIATION
NFPA	NATIONAL FIRE PROTECTION ASSOCIATION
NF	NON-FUSED
NFS	NON-FUSED SWITCH
NIC	NOT IN CONTRACT
NL	NIGHT LIGHT
N.O.	NORMALLY OPEN
NO.	NUMBER
NTS	NOT TO SCALE

O

OAF	OUTSIDE AIR FAN
OC	ON CENTER

P

P	POLE, PUMP
PC	PLUMBING CONTRACTOR
PCHP	PRIMARY CHILLED WATER PUMP
PH	PHASE
PP	POWER POLE
PNL	PANEL
PNTH	PENTHOUSE
PR	PAIR
PRI	PRIMARY
PVC	POLYVINYL CHLORIDE
PWR	POWER

Q

QTY	QUANTITY

R

R	RISER
RA	RETURN AIR
RAD	REFRIGERATED AIR DRYER
RAF	RETURN AIR FAN
RAG	RETURN AIR GRILL
RCP	REFLECTED CEILING PLAN
RCPT	RECEPTACLE
RE:	REFERENCE, REFER
RECIRC	RECIRCULATE
REFR	REFRIGERATOR
REINF	REINFORCING
REQD	REQUIRED
REV	REVISION, REVISE
RKVA	RUNNING KILOVOLT-AMPS
RKW	RUNNING KILOWATTS
RLA	RUNNING LOAD AMPS
RM	ROOM, REFRIGERATION MACHINE
RPM	REVOLUTIONS PER MINUTE
RTAH	ROOFTOP AIR HANDLING UNIT
RTU	ROOFTOP UNIT
RVNR	REDUCED-VOLTAGE, NON-REVERSING

S

SA	SUPPLY AIR
SAF	SUPPLY AIR FAN
SCHED	SCHEDULED
SCHP	SECONDARY CHILLED WATER PUMP
SCR	SILICON CONTROLLED RECTIFIER
SE	SEWAGE EJECTOR
SEC	SECONDARY
SECT	SECTION
SF	SQUARE FEET
SFCS	SPRINKLER FLOOR CONTROL STATION
SHT	SHEET
SHWP	SECONDARY HEATING WATER PUMP
SIM	SIMILAR
SKVA	STARTING KILOVOLT-AMPS
SKW	STARTING KILOWATTS
SP	SUMP PUMP
SPEC	SPECIFICATION
SPF	STAIR PRESSURIZATION FAN
SPKR	SPEAKER
SPDT	SINGLE-POLE, DOUBLE-THROW
SPST	SINGLE-POLE, SINGLE-THROW
SQ	SQUARE
SRF	SMOKE REMOVAL FAN
SS	START-STOP PUSHBUTTON
SSSC	SOLID STATE SPEED CONTROL
STB	STEAM BOILER
STD	STANDARD
STL	STEEL
SURF	SURFACE
SUSP	SUSPEND
SW	SWITCH
SWBD	SWITCHBOARD

T

TC	TEMPERATURE CONTROL
TCC	TEMPERATURE CONTROL COMPRESSOR
TEL	TELEPHONE
TF	TRANSFER FAN
TL	TWIST-LOCK
TOC	TOP OF CURB
TSTAT	THERMOSTAT
TTB	TELEPHONE TERMINAL BOARD
TTC	TELEPHONE TERMINAL CABINET
TU	TERMINAL UNIT
TV	TELEVISION
TYP	TYPICAL
2S-1W	TWO-SPEED, ONE-WINDING
2S-2W	TWO-SPEED, TWO-WINDING

U

UG	UNDERGROUND
UH	UNIT HEATER
UL	UNDERWRITERS LABORATORIES, INC.
UON	UNLESS OTHERWISE NOTED
UPS	UNINTERRUPTABLE POWER SYSTEM
U/F	UNDERFLOOR
U/S	UNDERSLAB

V

V	VOLT
VA	VOLT-AMPERE
VP	VACUUM PUMP
VM	VOLT METER
VS	VOLT METER SWITCH

W

W	WATT, WIDTH, WIRE
W/	WITH
W/O	WITHOUT
WP	WEATHERPROOF

X

XFMR	TRANSFORMER

Z

Z	ZONE

ELECTRICAL SYMBOLS

(ALL SYMBOLS SHOWN ARE NOT NECESSARILY USED ON THE DRAWINGS)

LIGHTING

- A, B — INCANDESCENT OR HID LIGHTING FIXTURE, LETTER DENOTES TYPE, H PREFIX DENOTES HID
- X — EXIT SIGN, ARROWS AS INDICATED, LETTER DENOTES TYPE
- FB — FLUORESCENT LIGHTING FIXTURE, LETTER DENOTES TYPE, F PREFIX DENOTES FLUORESCENT
- LIGHT FIXTURE ON EMERGENCY OR LIFE SAFETY CIRCUIT
- LIGHT FIXTURE ON CRITICAL BRANCH CIRCUIT
- SITE LIGHTING FIXTURE, LETTER DENOTES TYPE

SWITCHES

- $ — SWITCH, SPST, 20A, 120/277V
- $3 — SWITCH, 20A, 120/277V, "2" DENOTES DPST, "3" DENOTES THREE-WAY, "4" DENOTES FOUR-WAY
- $L — SWITCH, SPDT, CENTER OFF, MOMENTARY CONTACT, "L" DENOTES TOGGLE, "LR" DENOTES ROCKER
- $K — SWITCH, SPST, 20A, 120/277V. "K" DENOTES KEY SWITCH, "P" DENOTES PILOT LIGHT, "T" DENOTES SPRING WOUND TIMER, "M" DENOTES WALL MOUNTED MOTION SENSOR.
- DIMMER CONTROL SWITCH, 1000 WATT UNLESS OTHERWISE NOTED
- M — CEILING MOUNTED MOTION SENSOR, RE: SPECIFICATIONS

RECEPTACLES AND OUTLETS

- SIMPLEX WALL RECEPTACLE, NEMA 5-20R, 20A, 125V
- DUPLEX WALL RECEPTACLE, NEMA 5-15R, 15A, 125V OR NEMA 5-20R, 20A, 125V, RE: SPECIFICATIONS, DOT INDICATES ABOVE COUNTER
- DUPLEX WALL RECEPTACLE ON EMERGENCY CIRCUIT, RED COLOR
- DUPLEX WALL RECEPTACLE ON A CIRCUIT DEDICATED TO DATA PROCESSING, GRAY COLOR. PROVIDE ISOLATED GROUND TYPE RECEPTACLES WHERE NOTED. (IG)
- WP — DUPLEX WALL RECEPTACLE. "WP" DENOTES WEATHERPROOF, "TP" DENOTES SAFETY TYPE, "GFI" DENOTES GROUND FAULT PROTECTION
- FOURPLEX WALL RECEPTACLE. NEMA 5-15R, 15A, 125V
- FOURPLEX WALL RECEPTACLE ON EMERGENCY CIRCUIT, RED COLOR
- SPECIAL RECEPTACLE, NEMA CONFIGURATION AS NOTED
- PA — FLOOR OUTLET, "P" DENOTES POKE-THRU, "F" DENOTES FLUSH, "A" DENOTES TYPE WHERE APPLICABLE.
- MULTI-OUTLET SURFACE RACEWAY
- J — JUNCTION BOX
- DIRECT CONNECTION TO EQUIPMENT
- P — PULL BOX (OVER 4" SQUARE)
- TELEPHONE WALL OUTLET. "W" DENOTES WALL PHONE HEIGHT, "P" DENOTES PAY PHONE, DOT INDICATES ABOVE COUNTER
- DATA WALL OUTLET
- COMBINATION TELEPHONE/DATA WALL OUTLET
- L — TENANT LIGHTING JUNCTION BOX
- P — TENANT POWER JUNCTION BOX

CIRCUITING AND WIRING

- CIRCUIT CONCEALED IN WALL OR CEILING
- CONDUIT CAST IN CONCRETE OR BELOW SLAB
- EXPOSED CONDUIT
- UG — UNDERGROUND CONDUIT/DUCTBANK
- CONDUIT TURNED UP
- CONDUIT TURNED DOWN
- G — HASH MARKS INDICATE NUMBER OF CONDUCTORS PHASE/NEUTRAL/SWITCH LEG/GROUND LEFT TO RIGHT. NO HASH MARKS INDICATES 2#12, 1#12G, UNLESS OTHERWISE NOTED.
- G — HOMERUN TO PANEL WITH CIRCUIT NUMBER(S) AS INDICATED.
- G — PARTIAL CIRCUIT HOMERUN TO PANEL
- T — COMMUNICATIONS CONDUIT OR CABLE. "T" DENOTES TELEPHONE, "D" DENOTES DATA, "I" DENOTES INTERCOM, "PA" DENOTES PAGING, "N" DENOTES NURSE CALL, "CB" DENOTES CODE BLUE, "S" DENOTES SECURITY, "C" DENOTES MASTER CLOCK, "FA" DENOTES FIRE ALARM

ELECTRICAL EQUIPMENT

- DISTRIBUTION PANEL
- SWITCHBOARD OR MOTOR CONTROL CENTER
- PANELBOARD (FLUSH/SURFACE MOUNT)
- DRY-TYPE TRANSFORMER
- ATS — AUTOMATIC TRANSFER SWITCH
- PLYWOOD TERMINAL BOARD, TYPE AS NOTED, 4' X 8' X 3/4" UNLESS NOTED OTHERWISE
- TERMINAL CABINET (FLUSH/SURFACE MOUNT),TYPE AS NOTED, 24" X 48" X 3 1/2" UNLESS NOTED OTHERWISE.
- BAT — BATTERY/INVERTER UNIT

PANEL DESIGNATIONS

2EHA-3

- "2" DENOTES FLOOR WHERE PANEL IS LOCATED
- "E" DENOTES SYSTEM TYPE - BLANK = NORMAL POWER, E= EMERGENCY POWER, S= LIFE SAFETY, C= CRITICAL BRANCH, Q= EQUIPMENT BRANCH
- "H" DENOTES VOLTAGE - "H"= 480Y/277V, "L"= 208Y/120V
- "A" DENOTES PANEL SEQUENCE

MISCELLANEOUS

- F — DASHED SYMBOLS INDICATE EXISTING DEVICES TO REMAIN, UNLESS OTHERWISE NOTED.
- INDICATES WALL-MOUNTED WHEN ATTACHED TO ANY SYMBOL
- INDICATES ABOVE COUNTER WHEN INCLUDED WITH ANY SYMBOL
- 1 — DRAWING NOTE REFERENCE
- 1 — BUS DUCT PLUG SCHEDULE REFERENCE
- 1 — STARTER/DISCONNECT SCHEDULE REFERENCE
- 1 — FEEDER SCHEDULE REFERENCE

MOTORS AND CONTROLS

- SINGLE OR THREE PHASE MOTOR
- ELECTRIC DUCT HEATER
- DISCONNECT (SAFETY) SWITCH "200/3/150" DENOTES AMPERES/POLE/FUSE, "NF" DENOTES NON-FUSED
- B — ENCLOSED CIRCUIT BREAKER
- MOTOR STARTER
- MOTOR STARTER FURNISHED WITH EQUIPMENT
- COMBINATION DISCONNECT (SAFETY) SWITCH AND MOTOR STARTER, "30/3/15/40" DENOTES AMPERES/POLES/FUSE/ STARTER SIZE, "NF" DENOTES NON-FUSED.
- COMBINATION DISCONNECT (SAFETY) SWITCH AND MOTOR STARTER FURNISHED WITH EQUIPMENT
- MS — MANUAL MOTOR STARTING WITH THERMAL OVERLOAD
- T — MOTOR-RATED TOGGLE SWITCH
- LC — LIGHTING CONTACTOR
- TS — TIME SWITCH
- PC — PHOTOCELL
- PUSH BUTTON
- DC — DOOR CONTACT SWITCH
- R — RELAY

ONE LINE AND RISER DIAGRAMS

- TRANSFORMER, TYPE AND RATINGS AS NOTED
- 800A/3P — SWITCH, RATING AS SHOWN
- 400A — FUSE, RATING AS SHOWN
- 225A/3P — CIRCUIT BREAKER, RATINGS AS SHOWN, 3 POLE UNLESS NOTED OTHERWISE
- 2000A/3P — DRAWOUT CIRCUIT BREAKER, RATINGS AS SHOWN, 3 POLE UNLESS NOTED OTHERWISE
- ST — SHUNT TRIP
- GFR — GROUND FAULT RELAY
- K — KIRK-KEY INTERLOCK
- A 0-2000 — AMMETER, RANGE AS SHOWN
- AS — AMMETER SWITCH
- V 0-600 — VOLTMETER, RANGE AS SHOWN
- VS — VOLTMETER SWITCH
- Wh D-15 — WATT-HOUR METER, "D" DENOTES DEMAND REGISTER "15" DENOTES MINUTES OF DEMAND INTERVAL
- 1200/5 — CURRENT TRANSFORMER, RATED AS SHOWN
- 12.47KV/120V — POTENTIAL TRANSFORMER, RATING AS SHOWN
- GROUND CONNECTION
- LIGHTNING ARRESTOR
- G — GENERATOR SET
- AUTOMATIC TRANSFER SWITCH
- BUS DUCT PLUG

FIRE ALARM

- FACP FACP — FIRE ALARM CONTROL PANEL (FLUSH/SURFACE)
- FAAP FAAP — FIRE ALARM REMOTE ANNUNCIATOR (FLUSH/SURFACE)
- AV — FIRE ALARM AUDIO VISUAL SIGNAL, WALL MOUNTED
- V — FIRE ALARM VISUAL SIGNAL, WALL MOUNTED
- F — FIRE ALARM AUDIO VISUAL SIGNAL, CEILING MOUNTED
- V — FIRE ALARM VISUAL SIGNAL, CEILING MOUNTED
- M — FIRE ALARM MANUAL PULL STATION
- WP H — EXTERIOR HORN W/WEATHERPROOF BACK BOX
- CT1 — ADDRESSABLE INPUT MODULE
- FJ — FIRE ALARM MANUAL PULL STATION WITH FIREMEN'S JACK
- SB — BEAM SMOKE DETECTOR
- ES — ELEVATOR LOBBY EMERGENCY SIGN
- H — HEAT DETECTOR
- SD L — AREA SMOKE DETECTOR; "L" INDICATES LOCAL ALARM
- DD RA — DUCT SMOKE DETECTOR. "RA" DENOTES RETURN AIR, "SA" DENOTES SUPPLY AIR
- RI — SMOKE DETECTOR REMOTE INDICATOR STATION
- DI — FIRE ALARM INPUT DEVICE, NUMBER AS REQUIRED.
- DO — FIRE ALARM OUTPUT DEVICE, NUMBER AS REQUIRED.
- FS — SPRINKLER FLOW SWITCH
- VS — VALVE SUPERVISORY SWITCH
- DH — MAGNETIC DOOR HOLDER
- HCP — HALON CONTROL PANEL

SECURITY

- D — DOOR CONTACT
- M — MOTION DETECTOR
- KP — KEY PAD
- CAMERA 22 INDOOR
- CAMERA 10 OUTDOOR

COMMUNICATIONS

- S L — SPEAKER; "L" INDICATES LOCAL ALARM
- I — CALL STATION

PANEL DESIGNATIONS

2EHA-3

- "2" DENOTES FLOOR WHERE PANEL IS LOCATED
- "E" DENOTES SYSTEM TYPE - BLANK = NORMAL POWER, E= EMERGENCY POWER, S= LIFE SAFETY, C= CRITICAL BRANCH, Q= EQUIPMENT BRANCH
- "H" DENOTES VOLTAGE - "H"= 480Y/277V, "L"= 208Y/120V
- "A" DENOTES PANEL SEQUENCE

GENERAL NOTES

GENERAL NOTES

A. REFER TO SPECIFICATIONS FOR MATERIALS AND METHODS FOR ELECTRICAL CONSTRUCTION

B. REFER TO ARCHITECTURAL REFLECTED CEILING PLANS FOR THE EXACT LOCATION OF ALL CEILING MOUNTED DEVICES.

C. REFER TO ARCHITECTURAL INTERIOR ELEVATION DRAWINGS, WHERE THE ARCHITECT HAS DRAWN SUCH ELEVATIONS, FOR THE LOCATIONS OF ALL WALL MOUNTED DEVICES.

D. COORDINATE EXACT LOCATION OF ALL LIGHTING FIXTURES IN MECHANICAL/ELECTRICAL SPACES WITH EQUIPMENT, DUCTWORK AND PIPING.

E. COORDINATE ALL SLAB CUTS AND STRUCURAL PENETRATIONS AND SLEEVES WITH THE GENERAL CONTRACTOR PRIOR TO EACH CONCRETE POUR.

F. FURNISH ACCESS DOORS FOR INSTALLATION BY THE GENERAL CONTRACTOR IN WALLS AND CEILINGS WHERE ACCESS IS REQUIRED TO CONCEALED ELECTRICAL BOXES AND DEVICES.

LIGHTING FIXTURE CIRCUITING NOTES

A. THE LIGHTING PLANS INDICATE SWITCHING AND BRANCH CIRCUIT NUMBERS FOR ALL LIGHTING FIXTURES. LOWER CASE LETTERS AT SWITCHES AND LIGHT FIXTURES INDICATE SWITCHING WHERE THE CONTROL PATTERN IS NOT OBVIOUS. INSTALL BRANCH CIRCUIT WIRING IN A RACEWAY TO ALL RIGIDLY ATTACHED LIGHT FIXTURES AND TO JUNCTION BOXES FOR ALL LAY-IN LIGHT FIXTURES, AS REQUIRED TO PROVIDE SWITCHING AND CIRCUITING AS SHOWN ON THE DRAWINGS. RE: SPECIFICATIONS FOR ADDITIONAL REQUIREMENTS.

B. BRANCH CIRCUIT HOMERUNS SHALL BE LIMITED TO THREE PHASE CONDUCTORS (ON DIFFERENT PHASES), ONE NEUTRAL CONDUCTOR AND ONE GROUND CONDUCTOR (WHERE SHOWN OR SPECIFIED), AND SHALL BE INSTALLED IN CONDUIT.

C. ALL LAY-IN LIGHTING FIXTURES SHALL BE CONNECTED TO A BRANCH CIRCUIT JUNCTION BOX WITH A FLEXIBLE FIXTURE TAIL, RE: SPECIFICATIONS. A MAXIMUM OF FOUR FIXTURE TAILS SHALL BE CONNECTED TO A SINGLE JUNCTION BOX. FIXTURE TO FIXTURE WIRING OF LAY-IN LIGHTING FIXTURES IS NOT PERMITTED.

POWER PLAN CIRCUITING NOTES

A. THE POWER PLANS INDICATE BRANCH CIRCUIT NUMBERS FOR ALL RECEPTACLES. WHERE BRANCH CIRCUIT WIRING IS NOT SHOWN, INSTALL BRANCH CIRCUIT WIRING IN A RACEWAY, AS REQUIRED TO PROVIDE CIRCUITING AS SHOWN ON THE DRAWINGS. RE: SPECIFICATIONS FOR ADDITIONAL REQUIREMENTS.

B. BRANCH CIRCUIT HOMERUNS SHALL BE LIMITED TO THREE PHASE CONDUCTORS (ON DIFFERENT PHASES), ONE OR TWO NEUTRAL CONDUCTORS AND ONE GROUND CONDUCTOR (WHERE SHOWN OR SPECIFIED), AND SHALL BE INSTALLED IN CONDUIT. SEPARATE NEUTRAL CONDUCTORS SHALL BE PROVIDED FOR EACH PHASE ON DATA CIRCUITS AND ELSEWHERE WHERE SHOWN OR NOTED ON THE DRAWINGS, WHERE SCHEDULES OR WHERE SPECIFIED.

BID DOCUMENTS ONLY
Document Incomplete: Not intended for permit or construction.
Engineer: N. Curt Jones, P.E.
P.E. Serial No.: 58428
Date: August 4, 2015

HOUSTON AIRPORT SYSTEM

APPROVED

HOUSTON AIRPORT SYSTEM DIRECTOR OR DESIGNATED PDC REPRESENTATIVE — DATE

JACOBS
5985 Rogerdale Road
Houston, Texas
77072

[P] 832.351.6000
[F] 281.776.2501
[W] www.jacobs.com

TBPE Firm #2966

Consultants:

JONES ENGINEERS, L.P.
Texas Registered Engineering Firm #F-3811
9820 Whithorn Drive
Houston, Texas 77095
[T] (713)222-7766
[F] (281)500-8160

Seals:

Project Client:
Houston Airport System
Project Address

Program Management Office

George Bush
Intercontinental Airport (IAH)

115 Standifer St.
Humble, TX 77338

Number	Description	Date
	95% REVIEW OF BRIDGING DOCUMENTS	21 MAY 2015
	100% BRIDGING DOCUMENTS	4 AUG 2015

Project No.:

Copyright: 2015 Jacobs Engineering

TDLR #:

Drawing Sheet Title:

ELECTRICAL ABBREVIATIONS AND SYMBOLS

Drawing Sheet Number:

E0.01

Owner's Drawing Sheet No.:

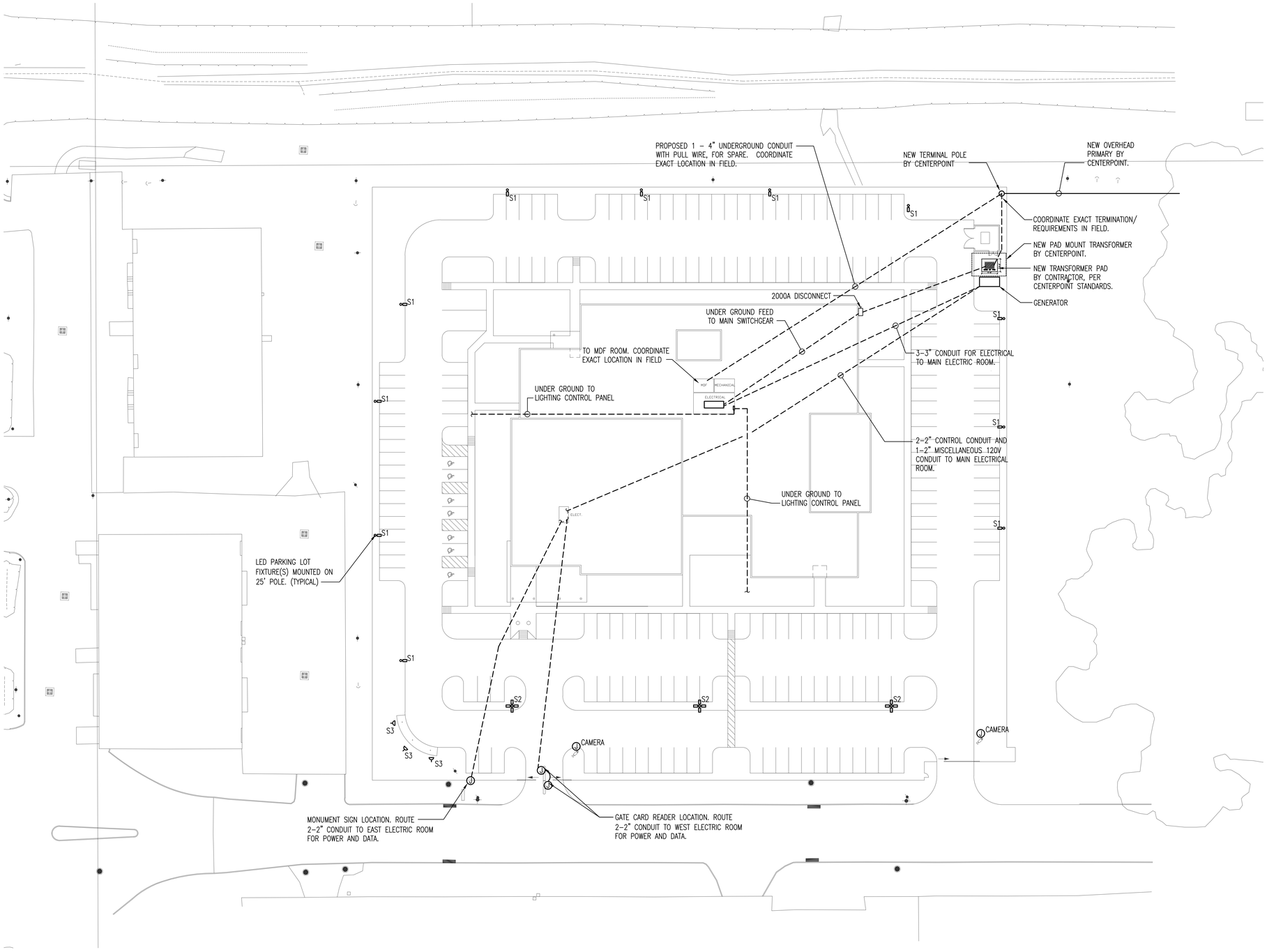

LOCATION OF ELECTRICAL SERVICE CONNECTION HAS NOT BEEN CONFIRMED. EXACT LOCATION MUST BE VERIFIED.

VERIFY EXACT REQUIREMENTS WITH UTILITY COMPANIES, REPRESENTATIVES AS FOLLOWS:

ELECTRICAL: CENTER POINT ENERGY

01 – ELECTRICAL SITE PLAN

SCALE: 1" = 30'–0"

BID DOCUMENTS ONLY

Document Incomplete: Not intended for permit or construction.

Engineer: N. Curt Jones, P.E.

P.E. Serial No.: 58428

Date: August 4, 2015

HOUSTON AIRPORT SYSTEM

APPROVED

HOUSTON AIRPORT SYSTEM DIRECTOR OR DESIGNATED PDC REPRESENTATIVE — DATE

JACOBS

5985 Rogerdale Road
Houston, Texas
77072

[P] 832.351.6000
[F] 281.776.2501
[W] www.jacobs.com

TBPE Firm #2966

Consultants:

JONES ENGINEERS, L.P.
Texas Registered Engineering Firm #F-3811

9820 Whithorn Drive
Houston, Texas 77095
[T] (713)222-7766
[F] (281)500-8160

Seals:

Project Client:
Houston Airport System
Project Address

Program Management Office

George Bush
Intercontinental Airport (IAH)

115 Standifer St.
Humble, TX 77338

Number	Description	Date
	95% REVIEW OF BRIDGING DOCUMENTS	21 MAY 2015
	100% BRIDGING DOCUMENTS	4 AUG 2015

Key Plan

Project North

0 30 60 90

GRAPHIC SCALE: 1" = 30'

Project No.:

Copyright: 2015 Jacobs Engineering

TDLR #:

Drawing Sheet Title:

ELECTRICAL SITE PLAN

Drawing Sheet Number:

E1.00

Owner's Drawing Sheet No.:

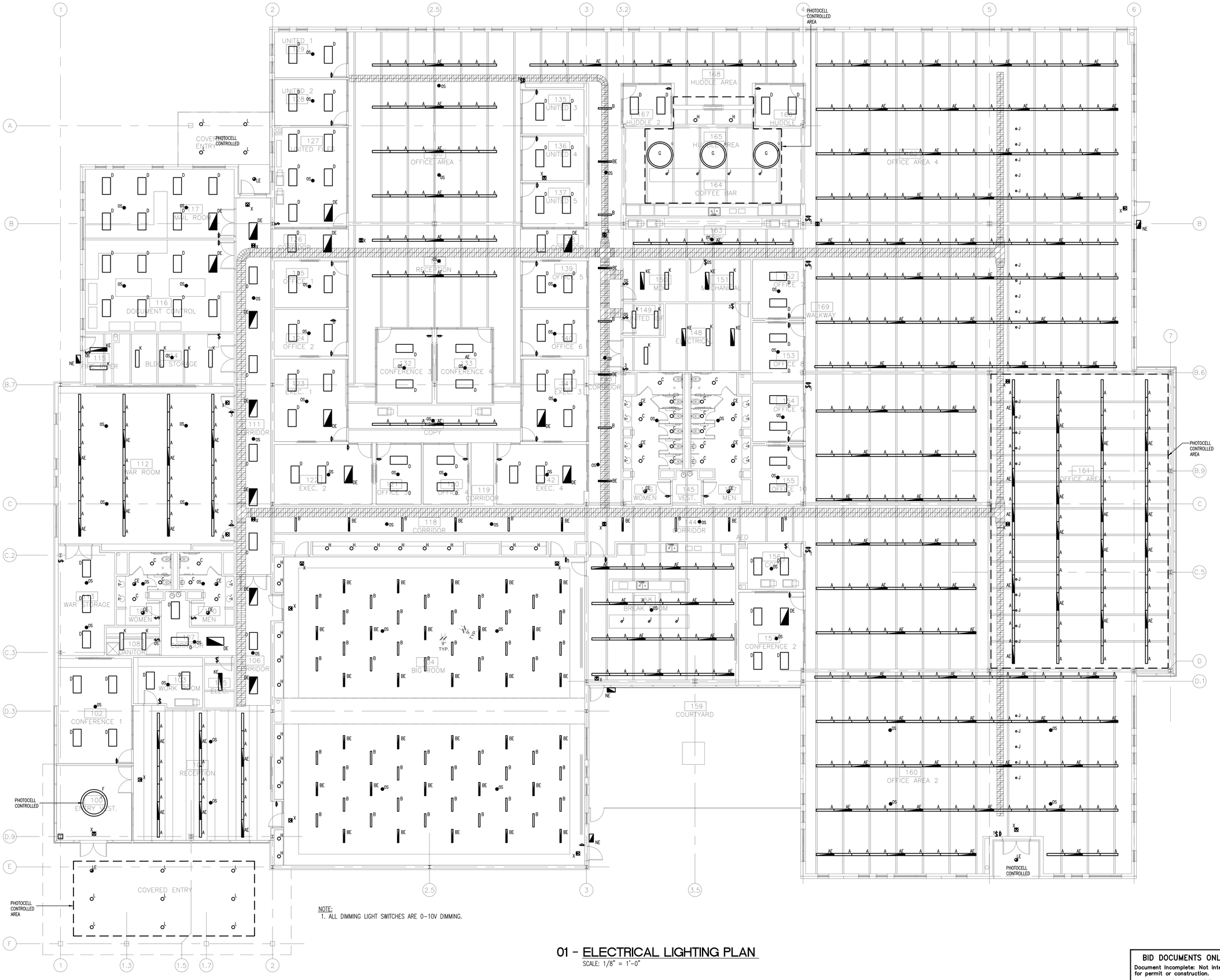

NOTE:
1. ALL DIMMING LIGHT SWITCHES ARE 0-10V DIMMING.

01 - ELECTRICAL LIGHTING PLAN

SCALE: 1/8" = 1'-0"

BID DOCUMENTS ONLY
Document Incomplete: Not intended for permit or construction.
Engineer: N. Curt Jones, P.E.
P.E. Serial No.: 58428
Date: August 4, 2015

HOUSTON AIRPORT SYSTEM

APPROVED

HOUSTON AIRPORT SYSTEM DIRECTOR OR DESIGNATED PDC REPRESENTATIVE — DATE

JACOBS
5985 Rogerdale Road
Houston, Texas
77072

[P] 832.351.6000
[F] 281.776.2501
[W] www.jacobs.com

TBPE Firm #2966

Consultants:

JONES ENGINEERS, L.P.
Texas Registered Engineering Firm #F-3811
9820 Whithorn Drive
Houston, Texas 77095
[T] (713)222-7766
[F] (281)500-8160

Seals:

Project Client:
Houston Airport System
Project Address

Program Management Office

George Bush
Intercontinental Airport (IAH)

115 Standifer St.
Humble, TX 77338

Number	Description	Date
	95% REVIEW OF BRIDGING DOCUMENTS	21 MAY 2015
	100% BRIDGING DOCUMENTS	4 AUG 2015

Key Plan

Project North

0 8 16 24
GRAPHIC SCALE: 1/8" = 1'-0"

Project No.:

Copyright: 2015 Jacobs Engineering

TDLR #:

Drawing Sheet Title:

ELECTRICAL LIGHTING PLAN

Drawing Sheet Number:

EL1.01

Owner's Drawing Sheet No.:

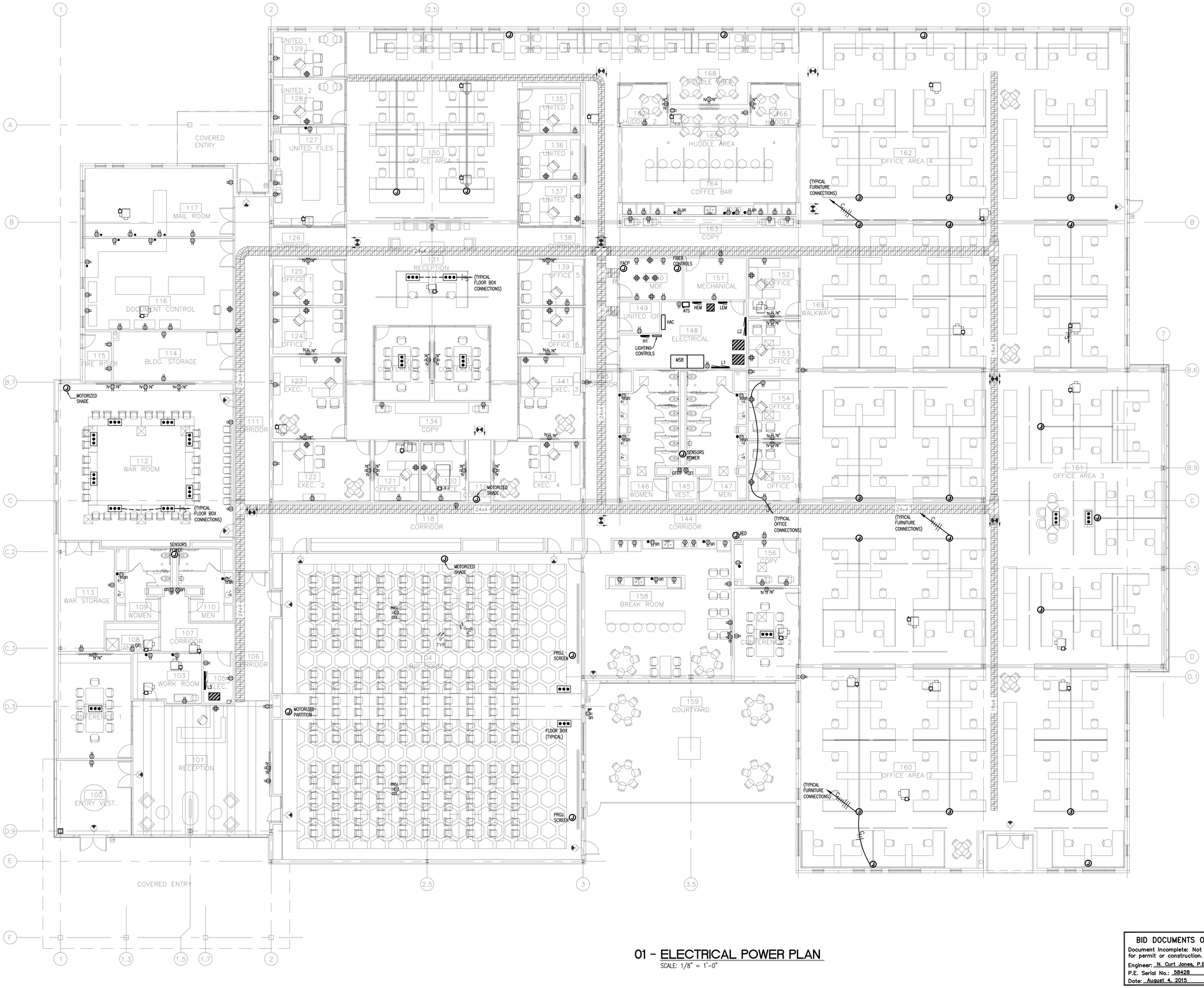

01 - ELECTRICAL POWER PLAN

SCALE: 1/8" = 1'-0"

BID DOCUMENTS ONLY

Document Incomplete: Not intended for permit or construction.

Engineer: N. Curt Jones, P.E.

P.E. Serial No.: 58428

Date: August 4, 2015

HOUSTON AIRPORT SYSTEM

APPROVED

HOUSTON AIRPORT SYSTEM DIRECTOR OR DESIGNATED PDC REPRESENTATIVE — DATE

JACOBS

5985 Rogerdale Road
Houston, Texas
77072

[P] 832.351.6000
[F] 281.776.2501
[W] www.jacobs.com

TBPE Firm #2966

Consultants:

JONES ENGINEERS, L.P.
Texas Registered Engineering Firm #F-3811

9820 Whithorn Drive
Houston, Texas 77095
[T] (713)222-7766
[F] (281)500-8160

Seals:

Project Client:
Houston Airport System
Project Address

Program Management Office

George Bush Intercontinental Airport (IAH)

115 Standifer St.
Humble, TX 77338

Number	Description	Date
	95% REVIEW OF BRIDGING DOCUMENTS	21 MAY 2015
	100% BRIDGING DOCUMENTS	4 AUG 2015

Key Plan

Project North

0 8 16 24
GRAPHIC SCALE: 1/8" = 1'-0"

Project No.:

Copyright: 2015 Jacobs Engineering

TDLR #:

Drawing Sheet Title:

ELECTRICAL POWER PLAN

Drawing Sheet Number:

EP1.01

Owner's Drawing Sheet No.:

01 - ELECTRICAL ROOF PLAN

SCALE: 1/8" = 1'-0"

BID DOCUMENTS ONLY

Document Incomplete: Not intended for permit or construction.

Engineer: N. Curt Jones, P.E.

P.E. Serial No.: 58428

Date: August 4, 2015

HOUSTON AIRPORT SYSTEM

APPROVED

HOUSTON AIRPORT SYSTEM
DIRECTOR OR DESIGNATED
PDC REPRESENTATIVE

DATE

JACOBS

5985 Rogerdale Road
Houston, Texas
77072

[P] 832.351.6000
[F] 281.776.2501
[W] www.jacobs.com

TBPE Firm #2966

Consultants:

JONES
ENGINEERS, L.P.
Texas Registered Engineering Firm #F-3811

9820 Whithorn Drive
Houston, Texas 77095
[T] (713)222-7766
[F] (281)500-8160

Seals:

Project Client:

Houston Airport System

Project Address

Program Management Office

George Bush
Intercontinental Airport (IAH)

115 Standifer St.
Humble, TX 77338

Number	Description	Date
	95% REVIEW OF BRIDGING DOCUMENTS	21 MAY 2015
	100% BRIDGING DOCUMENTS	4 AUG 2015

Key Plan

Project North

0 8 16 24

GRAPHIC SCALE: 1/8" = 1'-0"

Project No.:

Copyright: 2015 Jacobs Engineering

TDLR #:

Drawing Sheet Title:

ELECTRICAL
ROOF PLAN

Drawing Sheet Number:

EP1.02

Owner's Drawing Sheet No.:

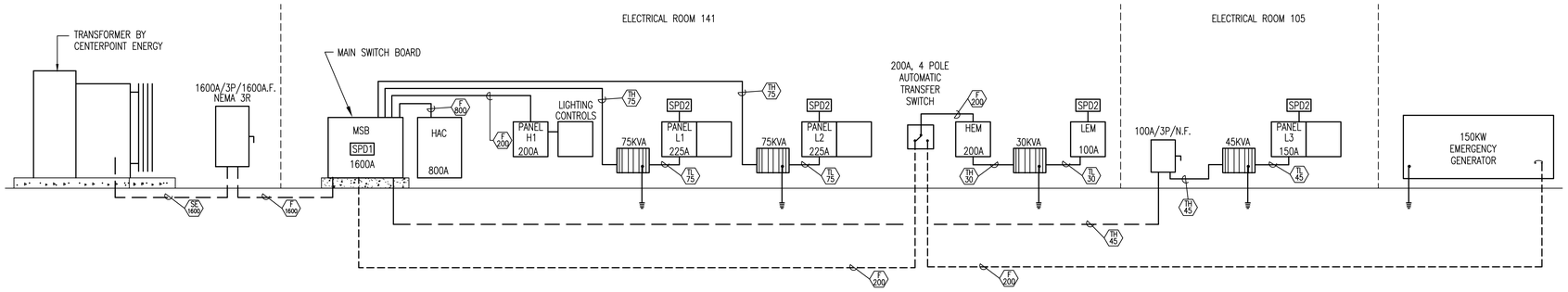

01 - ELECTRICAL RISER DIAGRAM

NOT TO SCALE

Load Analysis

43,055 Sq.Ft.	Connect KVA	Factor	Demand KVA	A Amps	B Amps	C Amps	N Amps
Lighting @3w/Sq.Ft.	129.2	1.25	161.5	194.3	194.3	194.3	194.3
Receptacles @2w/Sq.Ft.	86.1	1.00	86.1	103.6	103.6	103.6	103.6
Site Lighting	30.0	1.25	37.5	45.1	45.1	45.1	45.1
HVAC	500.0	1.00	500.0	601.7	601.7	601.7	0.0
MISC	75.0	1.00	75.0	90.3	90.3	90.3	90.3
System Furniture	75.0	1.00	75.0	90.2	90.2	90.2	90.2
25% Largest Motor	44.5	1.00	44.5	53.5	53.5	53.5	0.0
Total	939.8		979.5	1178.7	1178.7	1178.7	523.5
277/480V, 3 PHASE, 4 WIRE SERVICE							

FEEDER SCHEDULE

MARK	CONDUIT	CONDUCTORS PER CONDUIT
SE 1600	(5) 3"	4 #400kcmil
F 1600	(5) 3"	4 #400kcmil, 1 #1/0 G.
F 800	(3) 3"	4 #300KCMIL, #2 G.
F 600	(2) 3"	4 #350kcmil, 1 #1/0 G.
F 400	(2) 2"	4 #3/0, 1 #3 G.
F 225	2-1/2"	4 #4/0, 1 #4 G.
F 200	2"	4 #3/0, 1 #6 G.
F 150	2"	4 #1/0, 1 #6 G.
F 100	1-1/4"	4 #3, 1 #8 G.
F 60	1"	4 #6, 1 #8 G.
F 50	1"	4 #8, 1 #10 G.
TH 75	2"	3 #1/0, 1 #6 G.
TL 75	2-1/2"	5 #250kcmil, 1 #4 G.
TH 45	1"	3 #4, 1 #8 G.
TL 45	2"	5 #1/0, 1 #6 G.
TH 30	3/4"	3 #6, 1 #10 G.
TL 30	1-1/4"	5 #1, 1 #8 G.

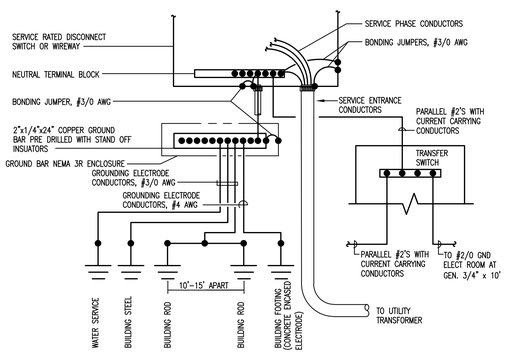

02 - SERVICE GROUNDING DETAIL

NOT TO SCALE

TRANSFORMER SCHEDULE

MARK	KVA	PRIMARY	SECONDARY	MOUNTING	REMARKS	PHASE SHIFT
T1	45	480V 3PHASE	120/208V 3PHASE 4W	FLOOR	GENERAL PURPOSE	
T2	30	480V 3PHASE	120/208V 3PHASE 4W	FLOOR	PQI HARMONIC MITIGATION XVMR DY SERIES	
T3	45	480V 3PHASE	120/208V 3PHASE 4W	FLOOR	PQI HARMONIC MITIGATION XVMR DY SERIES	
T4	75	480V 3PHASE	120/208V 3PHASE 4W	FLOOR	PQI HARMONIC MITIGATION XVMR DY SERIES	
T5	112.5	480V 3PHASE	120/208V 3PHASE 4W	FLOOR	PQI HARMONIC MITIGATION XVMR DY SERIES	
TLK1	112.5	480V 3PHASE	120/208V 3PHASE 4W	FLOOR, KITCHEN	GENERAL PURPOSE	
TLK2	112.5	480V 3PHASE	120/208V 3PHASE 4W	FLOOR, KITCHEN	GENERAL PURPOSE	

SPD SCHEDULE

MARK	MANUFACTURE	MODEL	LIEBERT ACCUGUIDE CABLE SIZE
SPD1	LIEBERT	SI250-277YANCE	5 #6, 1 1/2" C
SPD2	LIEBERT	ACVII 120Y 111	5 #10, 1 1/2" C (TYPICAL FOR ALL PANELBOARDS WHERE INDICATED)
SPD3	LIEBERT	ACVII 120Y 111	5 #10, 1 1/2" C

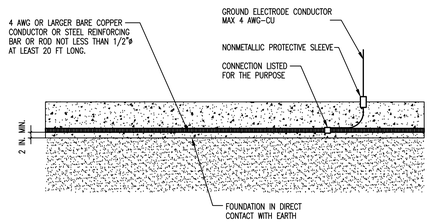

03 - CONCRETE - ENCASED ELECTRODE

NOT TO SCALE

HOUSTON AIRPORT SYSTEM

APPROVED

HOUSTON AIRPORT SYSTEM DIRECTOR OR DESIGNATED PDC REPRESENTATIVE — DATE

JACOBS

5985 Rogerdale Road
Houston, Texas
77072

[P] 832.351.6000
[F] 281.776.2501
[W] www.jacobs.com

TBPE Firm #2966

Consultants:

JONES ENGINEERS, L.P.
Texas Registered Engineering Firm #F-3811

9820 Whithorn Drive
Houston, Texas 77095
[T] (713)222-7766
[F] (281)500-8160

Seals:

Project Client:
Houston Airport System
Project Address

Program Management Office

George Bush Intercontinental Airport (IAH)

115 Standifer St.
Humble, TX 77338

Number	Description	Date
	95% REVIEW OF BRIDGING DOCUMENTS	21 MAY 2015
	100% BRIDGING DOCUMENTS	4 AUG 2015

Project No.:

Copyright: 2015 Jacobs Engineering

TDLR #:

Drawing Sheet Title:

ELECTRICAL RISER DIAGRAM

BID DOCUMENTS ONLY
Document Incomplete: Not intended for permit or construction.
Engineer: N. Curt Jones, P.E.
P.E. Serial No.: 58428
Date: August 4, 2015

Drawing Sheet Number:

E3.01

Owner's Drawing Sheet No.:

Panel MSB

Service: 277/480 Volts, 3 phase, 4 Wire, Solid/Neutral
Mains: 1600A MLO
Surface Mounted

Load	Serving	Wire	Breaker	Circuit				Circuit	Breaker	Wire	Serving	Load
	Panel HAC	--	3P-800	1	A			2	3P-200	--	Panel H1	
	*	--	--	3		B		4	--	--	*	
	*	--	--	5			C	6	--	--	*	
	XFMR Panel L1	--	3P-125	7	A			8	3P-125	--	XFMR Panel L2	
	*	--	--	9		B		10	--	--	*	
	*	--	--	11			C	12	--	--	*	
	ATS	--	3P-200	13	A			14	3P-60	--	XFMR Panel L3	
	*	--	--	15		B		16	--	--	*	
	*	--	--	17			C	18	--	--	*	
				19	A			20				
				21		B		22				
				23			C	24				
				25	A			26				
				27		B		28				
				29			C	30				
				31	A			32				
				33		B		34				
				35			C	36				
				37	A			38				
				39		B		40				
				41			C	42				
0												0

Load Summary (Including Sub Panels)	Con KW	Factor	Dem KW
Lighting	0	1.25	0
Rec(10K@100%, rest @50%)	0.0	1.00	0.0
Rec 50%	0.0	0.50	0.0
Equip	0.0	1.00	0.0
HVAC	0.0	1.00	0.0
Kitchen	0.0	0.65	0.0
Total KW	0.0		0.0
Amps	0.0		0.0

INCLUDES SUB PANELS

Panel L2

Service: 120/208 Volts, 3 phase, 4 Wire, 200% Solid/Neutral
Mains: 225A With 225A MCB
Surface Mount

Load	Serving	Wire	Breaker	Circuit				Circuit	Breaker	Wire	Serving	Load
				1	A			2				
				3		B		4				
				5			C	6				
				7	A			8				
				9		B		10				
				11			C	12				
				13	A			14				
				15		B		16				
				17			C	18				
				19	A			20				
				21		B		22				
				23			C	24				
				25	A			26				
				27		B		28				
				29			C	30				
				31	A			32				
				33		B		34				
				35			C	36				
0	Spare	--	1P-20	37	A			38	1P-20	--	Spare	0
0	Space	--	--	39		B		40	--	--	Space	0
0	Space	--	--	41			C	42	--	--	Space	0
0												0

Load Summary (Including Sub Panels)	Con KW	Factor	Dem KW
Lighting	0	1.25	0
Rec(10K@100%, rest @50%)	0.0	1.00	0.0
Rec 50%	0.0	0.50	0.0
Equip	0.0	1.00	0.0
HVAC	0.0	1.00	0.0
Kitchen	0.0	0.65	0.0
Total KW	0.0		0.00
Amps	0.0		0.0

WITH FEED THRU LUGS

Panel L3

Service: 120/208 Volts, 3 phase, 4 Wire, 200% Solid/Neutral
Mains: 150A With 150A MCB
Surface Mount

Load	Serving	Wire	Breaker	Circuit				Circuit	Breaker	Wire	Serving	Load
				1	A			2				
				3		B		4				
				5			C	6				
				7	A			8				
				9		B		10				
				11			C	12				
				13	A			14				
				15		B		16				
				17			C	18				
				19	A			20				
				21		B		22				
				23			C	24				
				25	A			26				
				27		B		28				
				29			C	30				
				31	A			32				
				33		B		34				
				35			C	36				
				37	A			38				
				39		B		40				
				41			C	42				
0												0

Load Summary (Including Sub Panels)	Con KW	Factor	Dem KW
Lighting	0	1.25	0
Rec(10K@100%, rest @50%)	0.0	1.00	0.0
Rec 50%	0.0	0.50	0.0
Equip	0.0	1.00	0.0
HVAC	0.0	1.00	0.0
Kitchen	0.0	0.65	0.0
Total KW	0.0		0.00
Amps	0.0		0.0

WITH FEED THRU LUGS

Panel HAC

Service: 277/480 Volts, 3 phase, 4 Wire, Solid/Neutral
Mains: 800A MLO
Surface Mounted

Load	Serving	Wire	Breaker	Circuit				Circuit	Breaker	Wire	Serving	Load
				1	A			2				
				3		B		4				
				5			C	6				
				7	A			8				
				9		B		10				
				11			C	12				
				13	A			14				
				15		B		16				
				17			C	18				
				19	A			20				
				21		B		22				
				23			C	24				
				25	A			26				
				27		B		28				
				29			C	30				
				31	A			32				
				33		B		34				
				35			C	36				
				37	A			38				
				39		B		40				
				41			C	42				
0												0

Load Summary (Including Sub Panels)	Con KW	Factor	Dem KW
Lighting	0	1.25	0
Rec(10K@100%, rest @50%)	0.0	1.00	0.0
Rec 50%	0.0	0.50	0.0
Equip	0.0	1.00	0.0
HVAC	0.0	1.00	0.0
Kitchen	0.0	0.65	0.0
Total KW	0.0		0.0
Amps	0.0		0.0

INCLUDES SUB PANELS

Panel L2.2 (Section 2)

Service: 120/208 Volts, 3 phase, 4 Wire, 200% Solid/Neutral
Mains: 225A MLO
Surface Mount

Load	Serving	Wire	Breaker	Circuit				Circuit	Breaker	Wire	Serving	Load
				1	A			2				
				3		B		4				
				5			C	6				
				7	A			8				
				9		B		10				
				11			C	12				
				13	A			14				
				15		B		16				
				17			C	18				
				19	A			20				
				21		B		22				
				23			C	24				
				25	A			26				
				27		B		28				
				29			C	30				
				31	A			32				
				33		B		34				
				35			C	36				
				37	A			38				
				39		B		40				
				41			C	42				
0												0

Load Summary (Including Sub Panels)	Con KW	Factor	Dem KW
Lighting	0	1.25	0
Rec(10K@100%, rest @50%)	0.0	1.00	0.0
Rec 50%	0.0	0.50	0.0
Equip	0.0	1.00	0.0
HVAC	0.0	1.00	0.0
Kitchen	0.0	0.65	0.0
Total KW	0.0		0.00
Amps	0.0		0.0

Panel L3.2 (Section 2)

Service: 120/208 Volts, 3 phase, 4 Wire, 200% Solid/Neutral
Mains: 150A MLO
Surface Mount

Load	Serving	Wire	Breaker	Circuit				Circuit	Breaker	Wire	Serving	Load
				1	A			2				
				3		B		4				
				5			C	6				
				7	A			8				
				9		B		10				
				11			C	12				
				13	A			14				
				15		B		16				
				17			C	18				
				19	A			20				
				21		B		22				
				23			C	24				
				25	A			26				
				27		B		28				
				29			C	30				
				31	A			32				
				33		B		34				
				35			C	36				
				37	A			38				
				39		B		40				
				41			C	42				
0												0

Load Summary (Including Sub Panels)	Con KW	Factor	Dem KW
Lighting	0	1.25	0
Rec(10K@100%, rest @50%)	0.0	1.00	0.0
Rec 50%	0.0	0.50	0.0
Equip	0.0	1.00	0.0
HVAC	0.0	1.00	0.0
Kitchen	0.0	0.65	0.0
Total KW	0.0		0.00
Amps	0.0		0.0

Panel H1

Service: 277/480 Volts, 3 phase, 4 Wire, Solid/Neutral
Mains: 200A MLO
Surface Mounted

Load	Serving	Wire	Breaker	Circuit				Circuit	Breaker	Wire	Serving	Load
				1	A			2				
				3		B		4				
				5			C	6				
				7	A			8				
				9		B		10				
				11			C	12				
				13	A			14				
				15		B		16				
				17			C	18				
				19	A			20				
				21		B		22				
				23			C	24				
				25	A			26				
				27		B		28				
				29			C	30				
				31	A			32				
				33		B		34				
				35			C	36				
				37	A			38				
				39		B		40				
				41			C	42				
0												0

Load Summary (Including Sub Panels)	Con KW	Factor	Dem KW
Lighting	0	1.25	0
Rec(10K@100%, rest @50%)	0.0	1.00	0.0
Rec 50%	0.0	0.50	0.0
Equip	0.0	1.00	0.0
HVAC	0.0	1.00	0.0
Kitchen	0.0	0.65	0.0
Total KW	0.0		0.0
Amps	0.0		0.0

INCLUDES SUB PANELS

Panel L1

Service: 120/208 Volts, 3 phase, 4 Wire, 200% Solid/Neutral
Mains: 225A With 225A MCB
Surface Mount

Load	Serving	Wire	Breaker	Circuit				Circuit	Breaker	Wire	Serving	Load
				1	A			2				
				3		B		4				
				5			C	6				
				7	A			8				
				9		B		10				
				11			C	12				
				13	A			14				
				15		B		16				
				17			C	18				
				19	A			20				
				21		B		22				
				23			C	24				
				25	A			26				
				27		B		28				
				29			C	30				
				31	A			32				
				33		B		34				
				35			C	36				
				37	A			38				
				39		B		40				
				41			C	42				
0												0

Load Summary (Including Sub Panels)	Con KW	Factor	Dem KW
Lighting	0	1.25	0
Rec(10K@100%, rest @50%)	0.0	1.00	0.0
Rec 50%	0.0	0.50	0.0
Equip	0.0	1.00	0.0
HVAC	0.0	1.00	0.0
Kitchen	0.0	0.65	0.0
Total KW	0.0		0.00
Amps	0.0		0.0

WITH FEED THRU LUGS

Panel L1.2 (Section 2)

Service: 120/208 Volts, 3 phase, 4 Wire, 200% Solid/Neutral
Mains: 225A MLO
Surface Mount

Load	Serving	Wire	Breaker	Circuit				Circuit	Breaker	Wire	Serving	Load
				1	A			2				
				3		B		4				
				5			C	6				
				7	A			8				
				9		B		10				
				11			C	12				
				13	A			14				
				15		B		16				
				17			C	18				
				19	A			20				
				21		B		22				
				23			C	24				
				25	A			26				
				27		B		28				
				29			C	30				
				31	A			32				
				33		B		34				
				35			C	36				
				37	A			38				
				39		B		40				
				41			C	42				
0												0

Load Summary (Including Sub Panels)	Con KW	Factor	Dem KW
Lighting	0	1.25	0
Rec(10K@100%, rest @50%)	0.0	1.00	0.0
Rec 50%	0.0	0.50	0.0
Equip	0.0	1.00	0.0
HVAC	0.0	1.00	0.0
Kitchen	0.0	0.65	0.0
Total KW	0.0		0.00
Amps	0.0		0.0

Panel HEM

Service: 277/480 Volts, 3 phase, 4 Wire, Solid/Neutral
Mains: 200A With 200A MCB
Surface Mounted

Load	Serving	Wire	Breaker	Circuit				Circuit	Breaker	Wire	Serving	Load
	XFMR Panel LEM	--	3P-50	1	A			2				
	*	--	--	3		B		4				
	*	--	--	5			C	6				
				7	A			8				
				9		B		10				
				11			C	12				
				13	A			14				
				15		B		16				
				17			C	18				
				19	A			20				
				21		B		22				
				23			C	24				
				25	A			26				
				27		B		28				
				29			C	30				
				31	A			32				
				33		B		34				
				35			C	36				
				37	A			38				
				39		B		40				
				41			C	42				
0												0

Load Summary (Including Sub Panels)	Con KW	Factor	Dem KW
Lighting	0	1.25	0
Rec(10K@100%, rest @50%)	0.0	1.00	0.0
Rec 50%	0.0	0.50	0.0
Equip	0.0	1.00	0.0
HVAC	0.0	1.00	0.0
Kitchen	0.0	0.65	0.0
Total KW	0.0		0.0
Amps	0.0		0.0

INCLUDES SUB PANELS

Panel LEM

Service: 120/208 Volts, 3 phase, 4 Wire, 200% Solid/Neutral
Mains: 100A With 100A MCB
Surface Mount

Load	Serving	Wire	Breaker	Circuit				Circuit	Breaker	Wire	Serving	Load
				1	A			2				
				3		B		4				
				5			C	6				
				7	A			8				
				9		B		10				
				11			C	12				
				13	A			14				
				15		B		16				
				17			C	18				
				19	A			20				
				21		B		22				
				23			C	24				
				25	A			26				
				27		B		28				
				29			C	30				
				31	A			32				
				33		B		34				
				35			C	36				
				37	A			38				
				39		B		40				
				41			C	42				
0												0

Load Summary (Including Sub Panels)	Con KW	Factor	Dem KW
Lighting	0	1.25	0
Rec(10K@100%, rest @50%)	0.0	1.00	0.0
Rec 50%	0.0	0.50	0.0
Equip	0.0	1.00	0.0
HVAC	0.0	1.00	0.0
Kitchen	0.0	0.65	0.0
Total KW	0.0		0.00
Amps	0.0		0.0

INCLUDES SUB PANELS

BID DOCUMENTS ONLY
Document incomplete: Not intended for permit or construction.
Engineer: N. Curt Jones, P.E.
P.E. Serial No.: 58428
Date: August 4, 2015

HOUSTON AIRPORT SYSTEM

APPROVED

HOUSTON AIRPORT SYSTEM DIRECTOR OR DESIGNATED PDC REPRESENTATIVE — DATE

JACOBS
5985 Rogerdale Road
Houston, Texas
77072

[P] 832.351.6000
[F] 281.776.2501
[W] www.jacobs.com

TBPE Firm #2966

Consultants:

JONES ENGINEERS, L.P.
Texas Registered Engineering Firm #F-3811
9820 Whithorn Drive
Houston, Texas 77095
[T] (713)222-7766
[F] (281)500-8160

Seals:

Project Client:
Houston Airport System
Project Address

Program Management Office

George Bush
Intercontinental Airport (IAH)

115 Standifer St.
Humble, TX 77338

Number	Description	Date
	95% REVIEW OF BRIDGING DOCUMENTS	21 MAY 2015
	100% BRIDGING DOCUMENTS	4 AUG 2015

Project No.:

Copyright: 2015 Jacobs Engineering

TDLR #:

Drawing Sheet Title:

ELECTRICAL SCHEDULES

Drawing Sheet Number:

E3.02

Owner's Drawing Sheet No.:

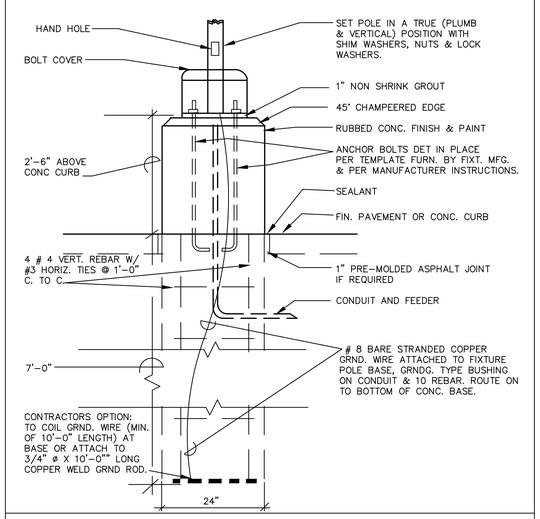

04-LIGHTING FIXTURE POLE BASE DETAIL

NOT TO SCALE

LIGHTING CONTROL & DESIGN

PROVIDE PHOTO CELL "ON" TIME SWITCH "OFF" CONTROLS, ASTRONOMICAL TIME CLOCK, COMBINATION SEVEN-DAY AND SEASONAL DAYLIGHT PROGRAM SCHEDULE ADJUSTMENT, AND A MINIMUM 4-HOUR POWER BACKUP. PROVIDE A DEDICATED PHONE LINE.

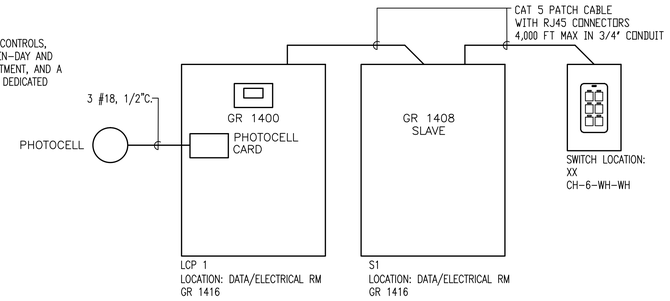

01 - LIGHTING CONTROLS - LOW VOLTAGE SINGLE LINE

N.T.S.

LCP1

Relay	Line Feed	Voltage	Description	Relay	Line Feed		Description
1	H1-	480V	Site Lighting *	2	H1-	480V	Site Lighting *
3	--	--	"	4	--	--	"
5	H1-	480V	Site Lighting *	6	H1-	480V	Site Lighting *
7	--	--	"	8	--	--	"
9	H1-	277V	Lighting	10	H1-	277V	Lighting
11	H1-	277V	Lighting	12	H1-	277V	Lighting
13	H1-	277V	Lighting	14	H1-	277V	Lighting
15	H1-	277V	Lighting	16	H1-	277V	Lighting

* - THROUGH PHOTO CELL

S1

Relay	Line Feed	Voltage	Description	Relay	Line Feed		Description
1	H1-	277V	Lighting	2	H1-	277V	Lighting
3	H1-	277V	Lighting	4	H1-	277V	Lighting
5	H1-	277V	Lighting	6	H1-	277V	Lighting
7	H1-	277V	Lighting	8	H1-	277V	Lighting
9	--	277V	Spare	10	--	277V	Spare
11	--	277V	Spare	12	--	277V	Spare
13	--	277V	Spare	14	--	277V	Spare
15	--	277V	Spare	16	--	277V	Spare

02 - RELAY PANEL SCHEDULE

N.T.S.

SW1

Relay	Line Feed	Voltage	Description	Relay	Line Feed	Voltage	Description
1	--	120V	Lighting	2	--	120V	Lighting
3	--	120V	Spare	4	--	120V	Spare
5	--	120V	Spare	6	--	120v	Spare

03 - SWITCH SCHEDULE

N.T.S.

Lighting Fixture Schedule

Mark	Description	Mounting	Lamps Watts	Type	Volts	Lens	Remarks
A	LumenWerx #QUANP-HLO-LED-80-1000-40-XXFT-UNV-D-1-xx-FINISH	Pendant	38	LED	UNV		Contractor to coordinate run lengths
AE	Same as "A" Connected to Emergency System						
B	Lumenwex #VIA3PDPAT-HLO-LED-80-1200-40-XX-UNV-D-1-FINISH	Pendant	48	LED	UNV		3' Pendant
BE	Same as "B" Connected to Emergency System						
C	Prescolite #LC6LED-277-DM-6LCLED-6-40K-8-XX	Recessed	21.5	LED	277V		
CE	Same as "C" Connected to Emergency System						
D	National Lighting #AFF24LED-5000-4000-F-UNV-DIM	Recessed	60	LED	UNV		
DE	Same as "D" Connected to Emergency System						
F	XAL #n677-xx-0503-7-x-6	Pendant	191	LED	UNV		
G	Betacalco #D15SD165AE-	Surface	156	LED	UNV		
H	LED Pendant	Pendant	70	LED	UNV		
J	Zaneen #D10-	Pendant	15	LED	XXX		
K	1x4 LED Strip Light	Pendant	50	LED	UNV		
KE	Same as "K" Connected to Emergency System						
L	Prescolite #LC6LED-277-DM-6LCLED-6-40K-8-XX	Recessed	21.5	LED	277V		
LE	Same as "L" Connected to Emergency System						
S1	Spaulding Cimarron #CL1-x-90L-5-5K-4-105	25' Pole	227	LED	480V		
S2	Spaulding Cimarron #CL1-x-90L-5-5K-4-105	25' Pole	4-227	LED	480V		4 @ 90
X	Dual Lite #LE-X-X-G-X	Surface	5	LED	UNV		

BID DOCUMENTS ONLY
Document incomplete: Not intended for permit or construction.
Engineer: N. Curt Jones, P.E.
P.E. Serial No.: 58428
Date: August 4, 2015

HOUSTON AIRPORT SYSTEM

APPROVED

HOUSTON AIRPORT SYSTEM DIRECTOR OR DESIGNATED PDC REPRESENTATIVE — DATE

JACOBS
5985 Rogerdale Road
Houston, Texas
77072

[P] 832.351.6000
[F] 281.776.2501
[W] www.jacobs.com

TBPE Firm #2966

Consultants:

JONES ENGINEERS, L.P.
Texas Registered Engineering Firm #F-3811
9820 Whithorn Drive
Houston, Texas 77095
[T] (713)222-7766
[F] (281)500-8160

Seals:

Project Client:
Houston Airport System
Project Address

Program Management Office

George Bush Intercontinental Airport (IAH)

115 Standifer St.
Humble, TX 77338

Number	Description	Date
	95% REVIEW OF BRIDGING DOCUMENTS	21 MAY 2015
	100% BRIDGING DOCUMENTS	4 AUG 2015

Project No.:

Copyright: 2015 Jacobs Engineering

TDLR #:

Drawing Sheet Title:

ELECTRICAL DETAILS

Drawing Sheet Number:

E3.03

Owner's Drawing Sheet No.:

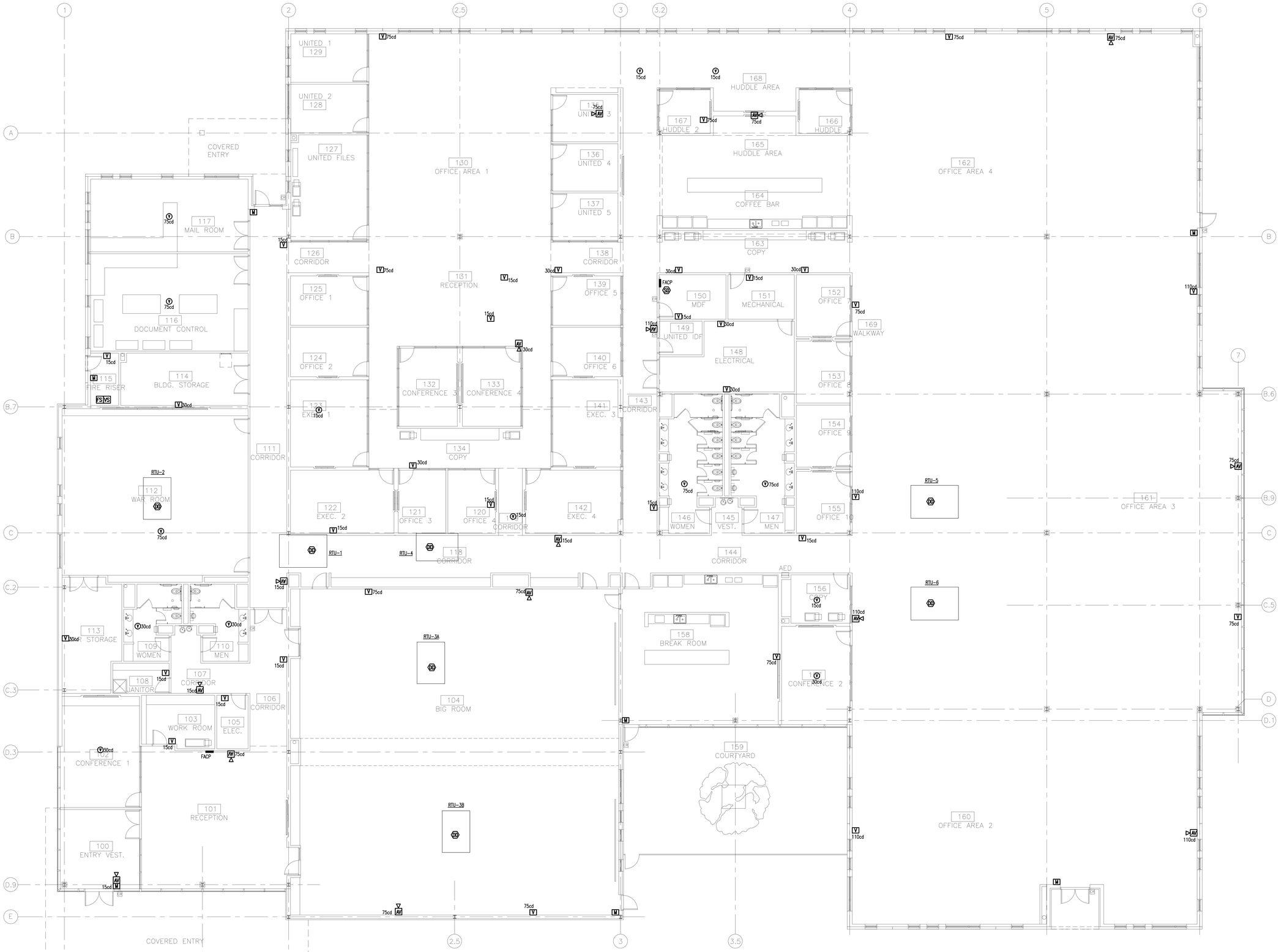

NOTE:

01 - FIRE PROTECTION PLAN

SCALE: 1/8" = 1'-0"

BID DOCUMENTS ONLY
Document Incomplete: Not intended for permit or construction.
Engineer: N. Curt Jones, P.E.
P.E. Serial No.: 58428
Date: August 4, 2015

HOUSTON AIRPORT SYSTEM

APPROVED

HOUSTON AIRPORT SYSTEM DIRECTOR OR DESIGNATED PDC REPRESENTATIVE — DATE

JACOBS
5985 Rogerdale Road
Houston, Texas
77072

[P] 832.351.6000
[F] 281.776.2501
[W] www.jacobs.com

TBPE Firm #2966

Consultants:

JONES ENGINEERS, L.P.
Texas Registered Engineering Firm #F-3811
9820 Whithorn Drive
Houston, Texas 77095
[T] (713)222-7766
[F] (281)500-8160

Seals:

Project Client:
Houston Airport System
Project Address

Program Management Office

George Bush Intercontinental Airport (IAH)

115 Standifer St.
Humble, TX 77338

Number	Description	Date
	95% REVIEW OF BRIDGING DOCUMENTS	21 MAY 2015
	100% BRIDGING DOCUMENTS	4 AUG 2015

Key Plan — Project North

GRAPHIC SCALE: 1/8" = 1'-0"

Project No.:

Copyright: 2015 Jacobs Engineering

TDLR #:

Drawing Sheet Title:

FIRE PROTECTION PLAN

Drawing Sheet Number:

FA1.01

Owner's Drawing Sheet No.:

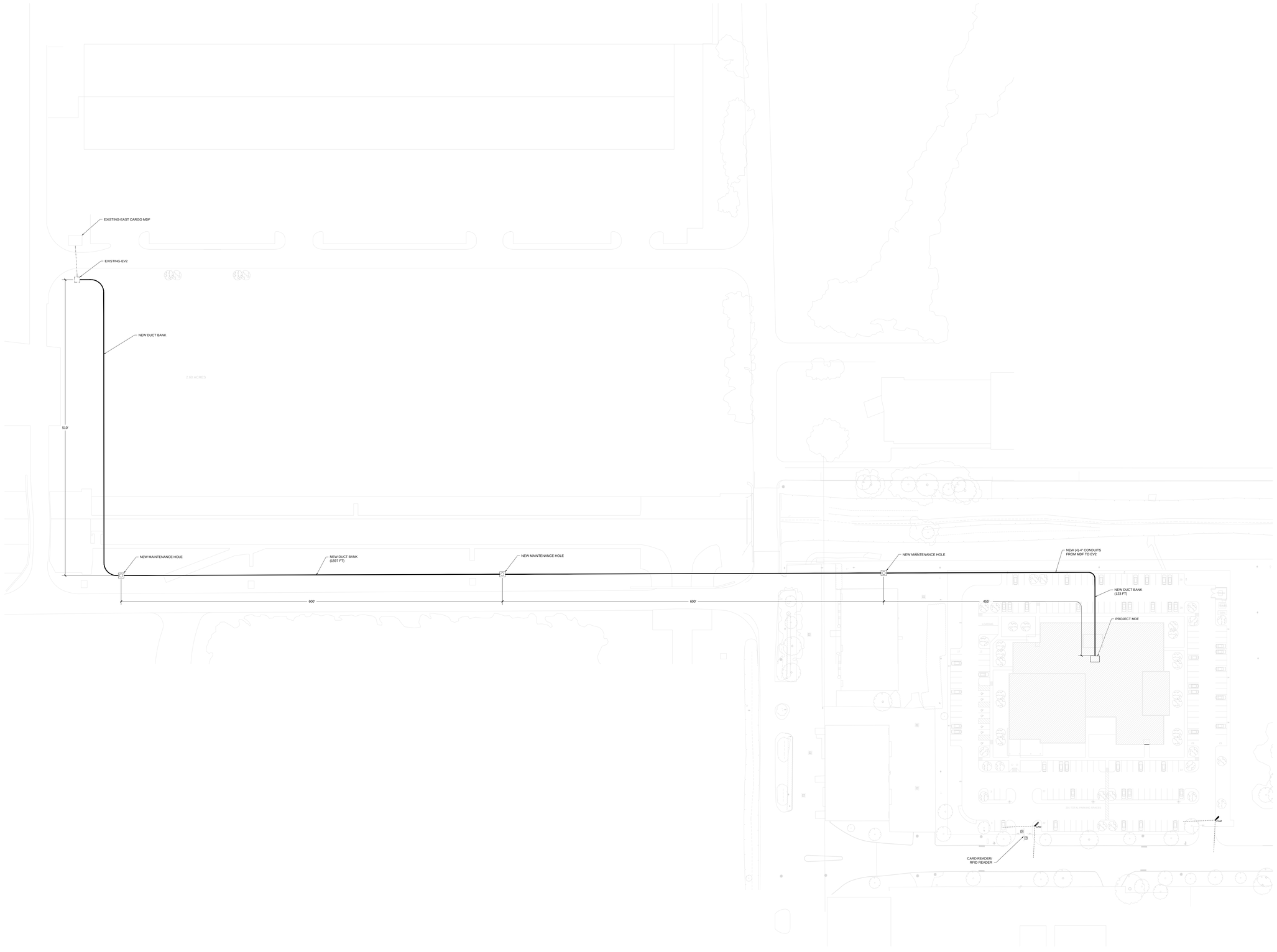

TELECOM SITE PLAN

1"=60-0" **1**

HOUSTON AIRPORT SYSTEM

APPROVED

HOUSTON AIRPORT SYSTEM
DIRECTOR OR DESIGNATED
PDC REPRESENTATIVE

DATE

JACOBS

5985 Rogerdale Road
Houston, Texas
77072

P 832.351.6000
F 281.776.2501
W www.jacobs.com

TBPE Firm #2966

Consultants:

4b Technology Group, LLC

12600 Northborough Dr. #290
Houston, TX
77067

P 832.249.9379
F 832.249.9756
W www.4btechnology.com

Seals:

PRELIMINARY
THESE DOCUMENTS ARE INCOMPLETE AND MAY NOT BE USED FOR REGULATORY APPROVAL, PERMIT OR CONSTRUCTION.
Designer: MARK BASFORD, RCDD
RCDD Reg. No.: 151819R
Date: 08-04-2015

Project Client:

Houston Airport System

Project Address

Program Management Office

George Bush
Intercontinental Airport (IAH)

115 Standifer St.
Humble, TX 77338

Number	Description	Date
	95% REVIEW OF BRIDGING DOCUMENTS	21 MAY 2015
	100% BRIDGING DOCUMENTS	04 AUG 2015

Key Plan

Project North

Project No.:

Copyright: 2015 Jacobs Engineering

TDLR #:

Drawing Sheet Title:

TELECOM SITE PLAN

Drawing Sheet Number:

T-010

Owner's Drawing Sheet No.:

B ARUBA WIRELESS BEACON, INSTALL ARUBA BEACON ON WALL 6" ABOVE DOOR FRAME. PROVIDE 1" CONDUIT FROM 2 GANG BACK BOX WITH SINGLE GANG REDUCER TO NEAREST WIRELESS ACCESS POINT.

TELECOM PLAN - LEVEL 1

1/8"=1'-0" **1**

HOUSTON AIRPORT SYSTEM

APPROVED

HOUSTON AIRPORT SYSTEM DIRECTOR OR DESIGNATED PDC REPRESENTATIVE — DATE

JACOBS

5985 Rogerdale Road
Houston, Texas
77072

P 832.351.6000
F 281.776.2501
W www.jacobs.com

TBPE Firm #2966

Consultants:

4b Technology Group, LLC

12600 Northborough Dr. #290
Houston, TX
77067

P 832.249.9379
F 832.249.9756
W www.4btechnology.com

Seals:

PRELIMINARY
THESE DOCUMENTS ARE INCOMPLETE AND MAY NOT BE USED FOR REGULATORY APPROVAL, PERMIT OR CONSTRUCTION.
Designer: MARK BASFORD, BCDD
BCDD Reg. No.: 1518198
Date: 08-04-2015

Project Client:
Houston Airport System
Project Address

Program Management Office

George Bush Intercontinental Airport (IAH)

115 Standifer St.
Humble, TX 77338

Number	Description	Date
	95% REVIEW OF BRIDGING DOCUMENTS	21 MAY 2015
	100% BRIDGING DOCUMENTS	04 AUG 2015

Key Plan

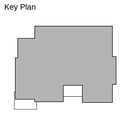

Project North

Project No.:

Copyright: 2015 Jacobs Engineering

TDLR #:

Drawing Sheet Title:

TELECOM PLAN
LEVEL 1

Drawing Sheet Number:

T-100

Owner's Drawing Sheet No.:

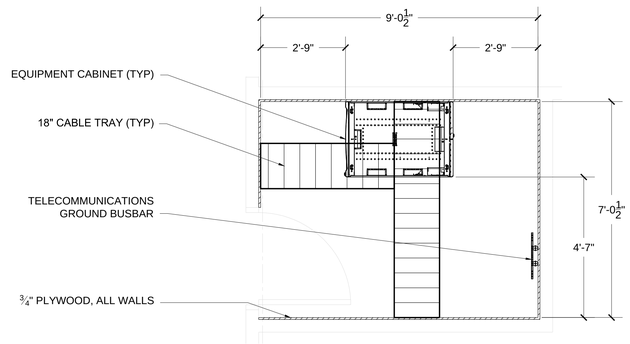

UNITED IDF 149 - ENLARGED PLAN

1/2"=1'-0" **3**

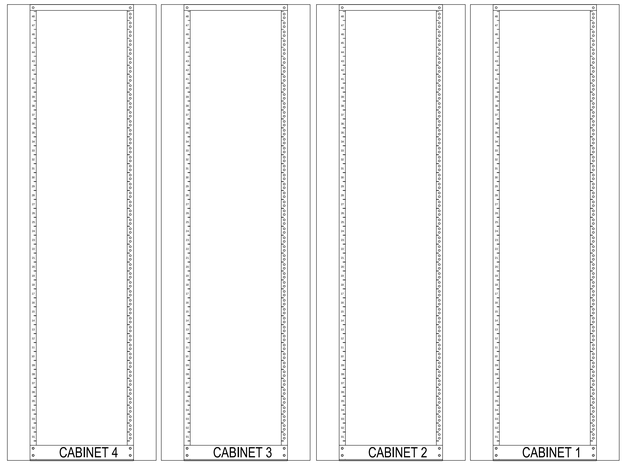

MDF 150 - CABINET ELEVATIONS

1/2"=1'-0" **2**

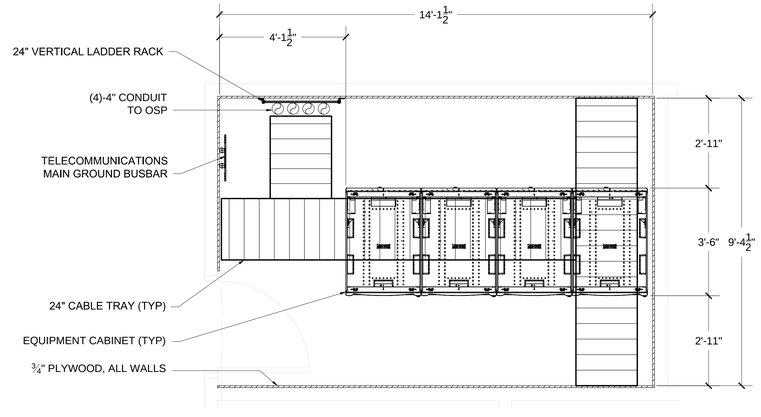

MDF 150 - ENLARGED PLAN

1/2"=1'-0" **1**

HOUSTON AIRPORT SYSTEM

APPROVED

HOUSTON AIRPORT SYSTEM
DIRECTOR OR DESIGNATED
PDC REPRESENTATIVE

DATE

JACOBS

5985 Rogerdale Road
Houston, Texas
77072

P 832.351.6000
F 281.776.2501
W www.jacobs.com

TBPE Firm #2966

Consultants:

4b Technology Group, LLC

12600 Northborough Dr. #290
Houston, TX
77067

P 832.249.9379
F 832.249.9756
W www.4btechnology.com

Seals:

PRELIMINARY
THESE DOCUMENTS ARE INCOMPLETE AND MAY NOT BE USED FOR REGULATORY APPROVAL, PERMIT OR CONSTRUCTION.
Designer: MARK BASFORD, BCDD
PLDD Reg. No.: 15181BR
Date: 08-04-2015

Project Client:
Houston Airport System
Project Address

Program Management Office

George Bush
Intercontinental Airport (IAH)

115 Standifer St.
Humble, TX 77338

Number	Description	Date
	95% REVIEW OF BRIDGING DOCUMENTS	21 MAY 2015
	100% BRIDGING DOCUMENTS	04 AUG 2015

Project No.:

Copyright: 2015 Jacobs Engineering

TDLR #:

Drawing Sheet Title:

MDF AND IDF ENLARGED PLANS AND ELEVATIONS

Drawing Sheet Number:

T-400

Owner's Drawing Sheet No.:

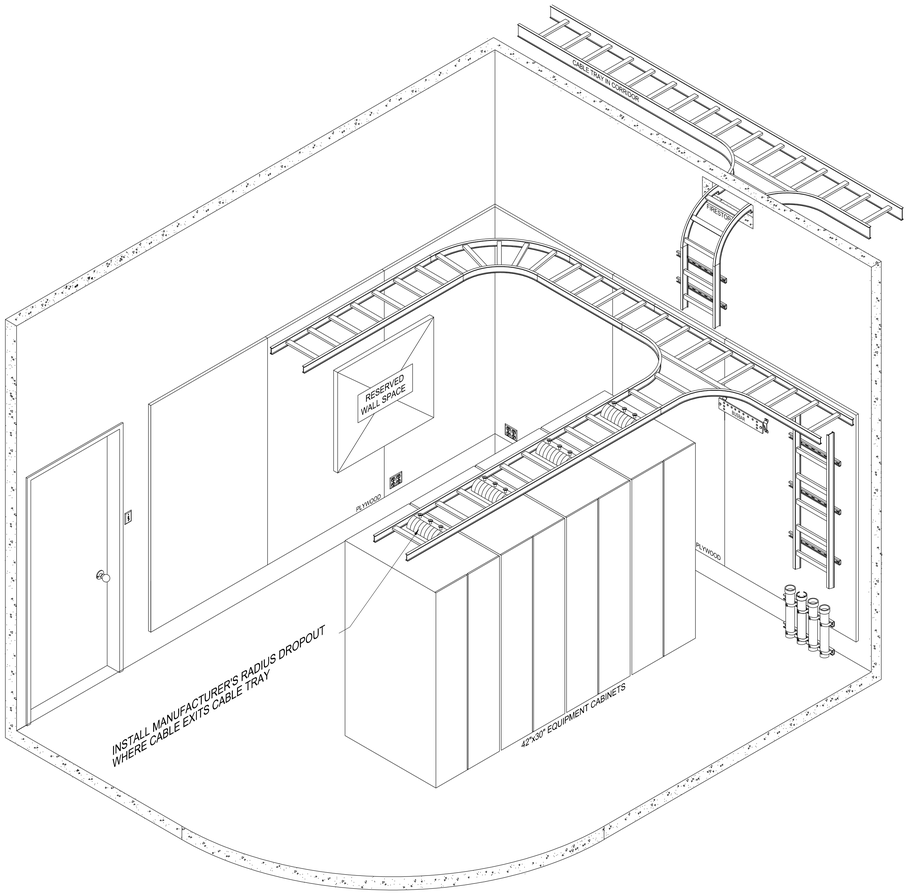

TYP TELECOM ROOM CABLE TRAY LAYOUT NTS **2**

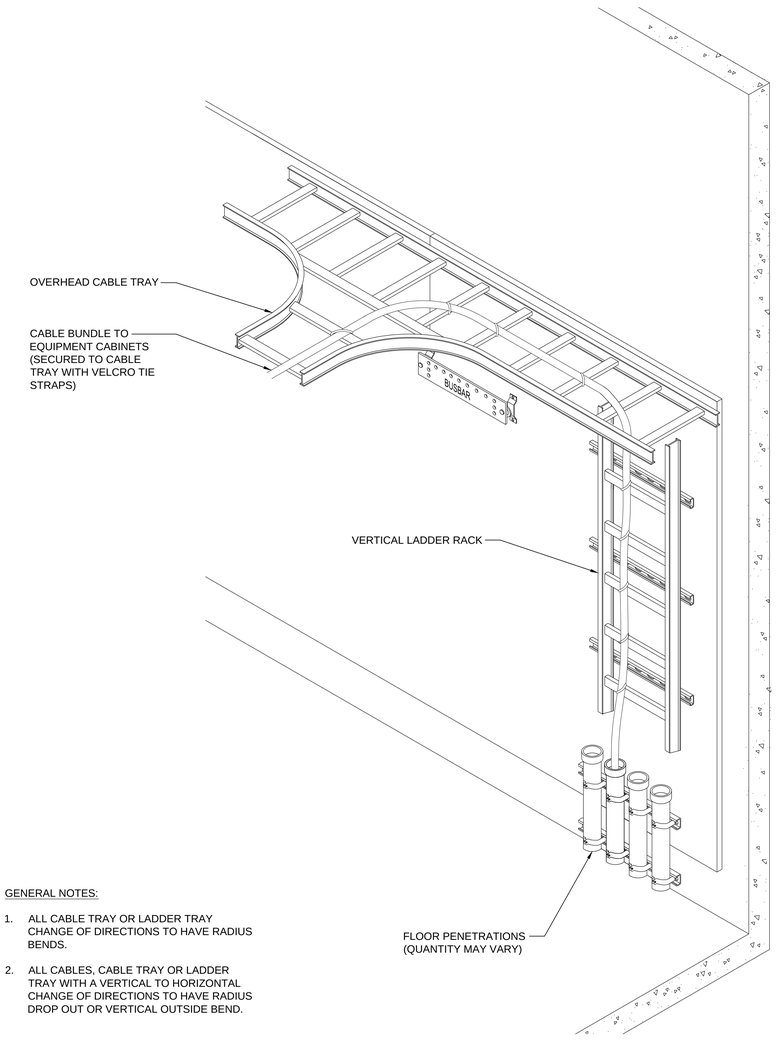

GENERAL NOTES:

1. ALL CABLE TRAY OR LADDER TRAY CHANGE OF DIRECTIONS TO HAVE RADIUS BENDS.

2. ALL CABLES, CABLE TRAY OR LADDER TRAY WITH A VERTICAL TO HORIZONTAL CHANGE OF DIRECTIONS TO HAVE RADIUS DROP OUT OR VERTICAL OUTSIDE BEND.

TYP FLOOR PENETRATION TO CABLE TRAY TRANSITION NTS **1**

HOUSTON AIRPORT SYSTEM

APPROVED

HOUSTON AIRPORT SYSTEM
DIRECTOR OR DESIGNATED
PDC REPRESENTATIVE

DATE

JACOBS

5985 Rogerdale Road
Houston, Texas
77072

P 832.351.6000
F 281.776.2501
W www.jacobs.com

TBPE Firm #2966

Consultants:

4b Technology Group, LLC

12600 Northborough Dr. #290
Houston, TX
77067

P 832.249.9379
F 832.249.9756
W www.4btechnology.com

Seals:

PRELIMINARY
THESE DOCUMENTS ARE INCOMPLETE AND MAY NOT BE USED FOR REGULATORY APPROVAL, PERMIT OR CONSTRUCTION.

Designer:	MARK BASFORD, BCDD
PLDD Reg. No.	151819R
Date:	08-04-2015

Project Client:
Houston Airport System
Project Address

Program Management Office

George Bush
Intercontinental Airport (IAH)

115 Standifer St.
Humble, TX 77338

Number	Description	Date
	95% REVIEW OF BRIDGING DOCUMENTS	21 MAY 2015
	100% BRIDGING DOCUMENTS	04 AUG 2015

Project No.:

Copyright: 2015 Jacobs Engineering

TDLR #:

Drawing Sheet Title:

TELECOM DETAILS

Drawing Sheet Number:

T-500

Owner's Drawing Sheet No.:

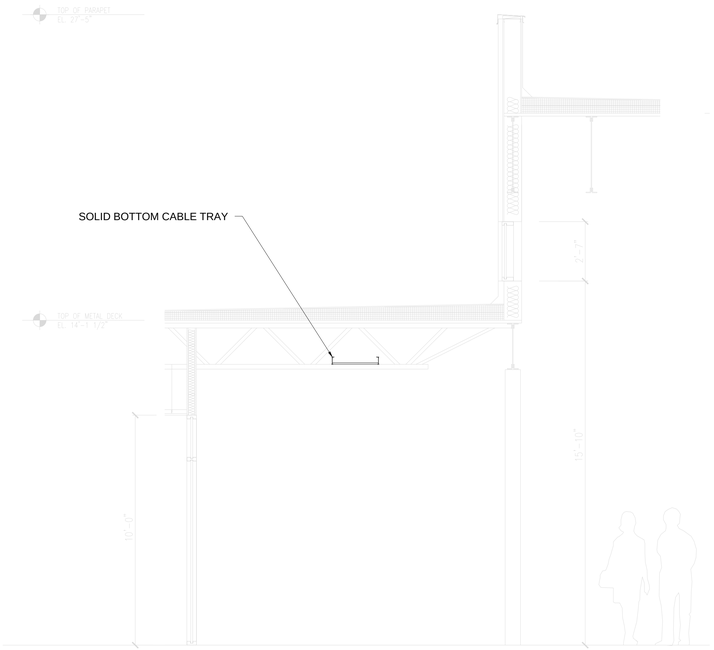

CABLE TRAY THROUGH CEILING STRUCTURE

NTS 5

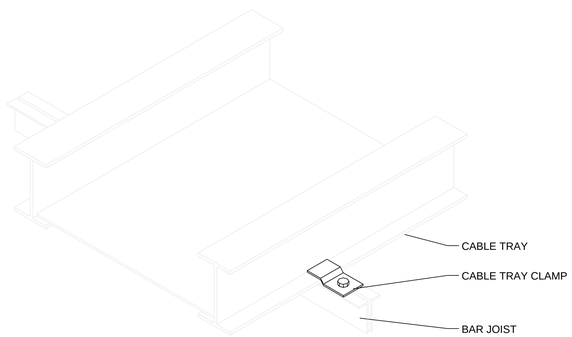

CABLE TRAY CLAMP

NTS 4

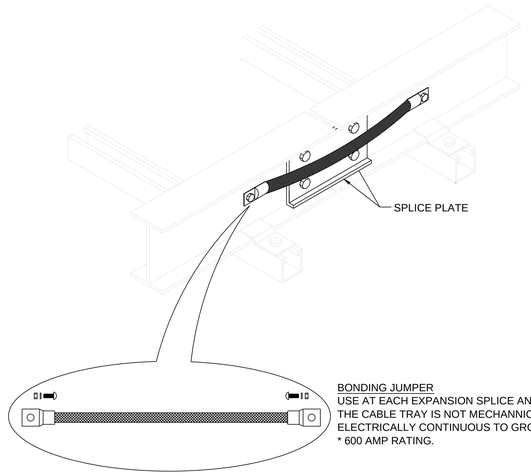

BONDING JUMPER
USE AT EACH EXPANSION SPLICE AND WHERE THE CABLE TRAY IS NOT MECHANNICALLY/ ELECTRICALLY CONTINUOUS TO GROUND.
* 600 AMP RATING.

CABLE TRAY BONDING JUMPER

NTS 3

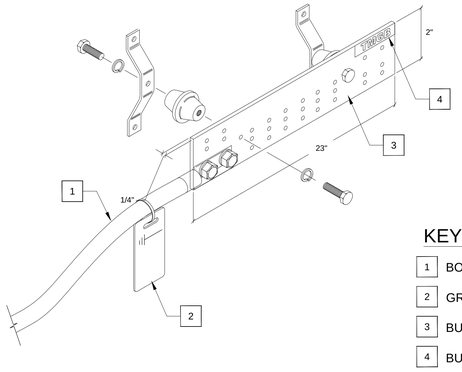

KEYED NOTES

1. BONDING BACKBONE
2. GROUNDING TAG
3. BUSBAR
4. BUSBAR LABEL

GROUND BUSBAR DETAIL

NTS 2

GENERAL NOTES:

1. CONDUIT SLEEVES (BY ELECTRICAL CONTRACTOR OR BY G.C. DIRECTION.)
2. FIRE STOP ALL FLOOR PENETRATIONS WITH APPROVED FIRE STOP SYSTEM RATED FOR SPECIFIED APPLICATION. REFERENCE ARCH. SPECIFICATION FOR APPROVED RATED MATERIALS AND METHODS.
3. CONDUIT SHALL BE CAPPED OR PLUGGED WITH REMOVABLE COVER AT ALL TIMES DURING CONSTRUCTION.
4. A 4/0 STRANDED BARE COPPER GROUND WIRE SHALL BE INSTALLED IN THE BOTTOM OF THE DUCT BANK BETWEEN MANHOLES. THE GROUND IS TO BE CONNECTED TO THE 4/0 GROUND BUS IN THE MANHOLE WITH AN EXOTHERMIC CONNECTION OR APPROVED MECHANICAL CONNECTION.

1. BACKBONE CABLE, SECURED TO LADDER RACK
2. VERTICAL LADDER RACK
3. SPARE CONDUIT WITH TREADED CAP
4. 4" CONDUIT WITH GROUNDING BUSHING
5. CONDUIT SLEEVES, SEALED AND FIRE STOPPED

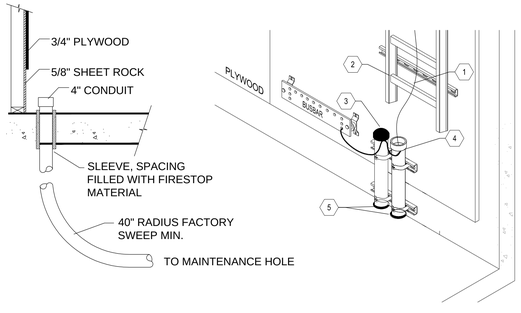

GROUNDING DETAIL

NTS 1

HOUSTON AIRPORT SYSTEM

APPROVED

HOUSTON AIRPORT SYSTEM
DIRECTOR OR DESIGNATED
PDC REPRESENTATIVE

DATE

JACOBS

5985 Rogerdale Road
Houston, Texas
77072

P 832.351.6000
F 281.776.2501
W www.jacobs.com

TBPE Firm #2966

Consultants:

4b Technology Group, LLC
12600 Northborough Dr. #290
Houston, TX
77067

P 832.249.9379
F 832.249.9756
W www.4btechnology.com

Seals:

PRELIMINARY
THESE DOCUMENTS ARE INCOMPLETE AND MAY NOT BE USED FOR REGULATORY APPROVAL, PERMIT OR CONSTRUCTION.
Designer: MARK BASFORD, BCDD
BCDD Reg. No.: 15181BR
Date: 08-04-2015

Project Client:
Houston Airport System
Project Address

Program Management Office

George Bush
Intercontinental Airport (IAH)

115 Standifer St.
Humble, TX 77338

Number	Description	Date
	95% REVIEW OF BRIDGING DOCUMENTS	21 MAY 2015
	100% BRIDGING DOCUMENTS	04 AUG 2015

Project No.:

Copyright: 2015 Jacobs Engineering

TDLR #:

Drawing Sheet Title:

TELECOM DETAILS

Drawing Sheet Number:

T-501

Owner's Drawing Sheet No.:

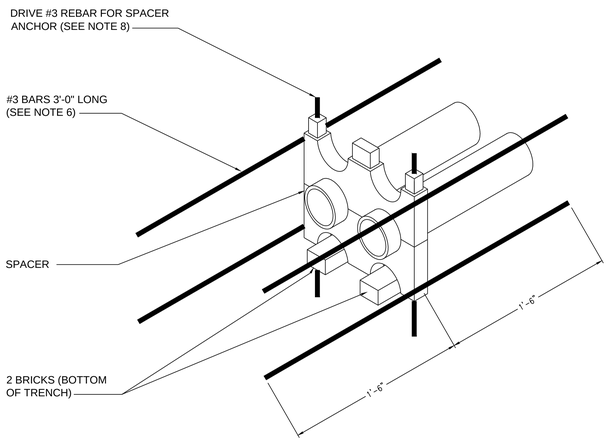

DUCTBANK SPACER DETAIL

NTS **2**

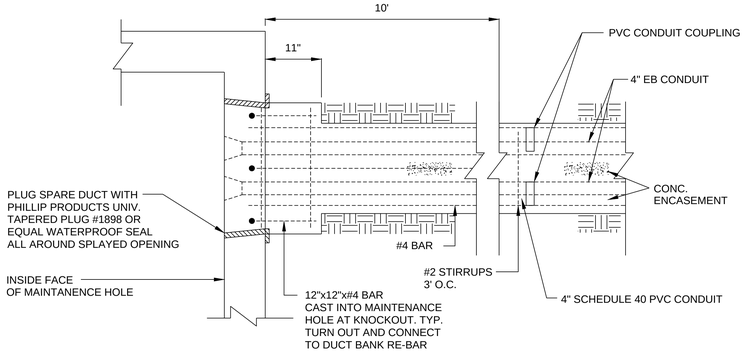

DUCTBANK CONNECTION AT MAINTENANCE HOLE

NTS **3**

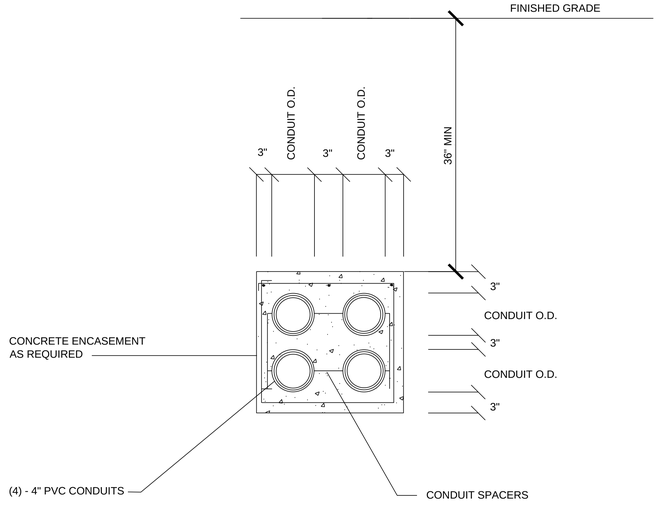

DUCTBANK CROSS SECTION

NTS **1**

HOUSTON AIRPORT SYSTEM

APPROVED

HOUSTON AIRPORT SYSTEM
DIRECTOR OR DESIGNATED
PDC REPRESENTATIVE

DATE

JACOBS

5985 Rogerdale Road
Houston, Texas
77072

P 832.351.6000
F 281.776.2501
W www.jacobs.com

TBPE Firm #2966

Consultants:

4b Technology Group, LLC

12600 Northborough Dr. #290
Houston, TX
77067

P 832.249.9379
F 832.249.9756
W www.4btechnology.com

Seals:

PRELIMINARY
THESE DOCUMENTS ARE INCOMPLETE AND MAY NOT BE USED FOR REGULATORY APPROVAL, PERMIT OR CONSTRUCTION.
Designer: MARK BASFORD, BCDD
JCDD Proj. No.: 151818R
Date: 08-04-2015

Project Client:

Houston Airport System

Project Address

Program Management Office

George Bush
Intercontinental Airport (IAH)

115 Standifer St.
Humble, TX 77338

Number	Description	Date
	95% REVIEW OF BRIDGING DOCUMENTS	21 MAY 2015
	100% BRIDGING DOCUMENTS	04 AUG 2015

Project No.:

Copyright: 2015 Jacobs Engineering

TDLR #:

Drawing Sheet Title:

TELECOM OSP DETAILS

Drawing Sheet Number:

T-502

Owner's Drawing Sheet No.:

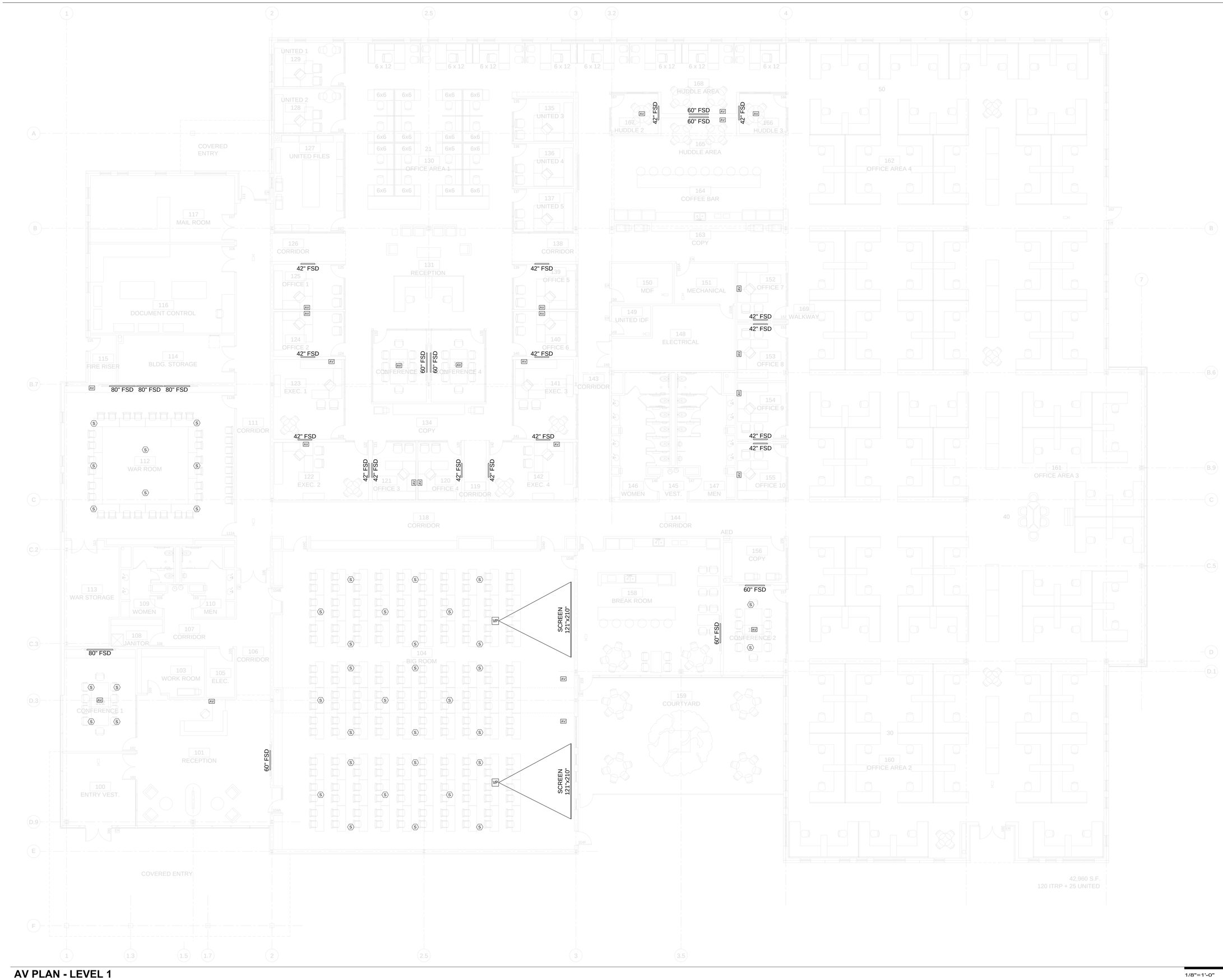

AV PLAN - LEVEL 1

1/8"=1'-0" **1**

HOUSTON AIRPORT SYSTEM

APPROVED

HOUSTON AIRPORT SYSTEM
DIRECTOR OR DESIGNATED
PDC REPRESENTATIVE

DATE

JACOBS

5985 Rogerdale Road
Houston, Texas
77072

P 832.351.6000
F 281.776.2501
W www.jacobs.com

TBPE Firm #2966

Consultants:

4b Technology Group, LLC
12600 Northborough Dr. #290
Houston, TX
77067

P 832.249.9379
F 832.249.9756
W www.4btechnology.com

Seals:

PRELIMINARY
THESE DOCUMENTS ARE INCOMPLETE AND MAY NOT BE USED FOR REGULATORY APPROVAL, PERMIT OR CONSTRUCTION.
Designer: MARK BASFORD, BCDD
BCDD Reg. No: 1518198
Date: 08-04-2015

Project Client:
Houston Airport System
Project Address

Program Management Office

George Bush
Intercontinental Airport (IAH)

115 Standifer St.
Humble, TX 77338

Number	Description	Date
	95% REVIEW OF BRIDGING DOCUMENTS	21 MAY 2015
	100% BRIDGING DOCUMENTS	04 AUG 2015

Key Plan

Project North

Project No.:

Copyright: 2015 Jacobs Engineering

TDLR #:

Drawing Sheet Title:

AV PLAN
LEVEL 1

Drawing Sheet Number:

TA-100

Owner's Drawing Sheet No.:

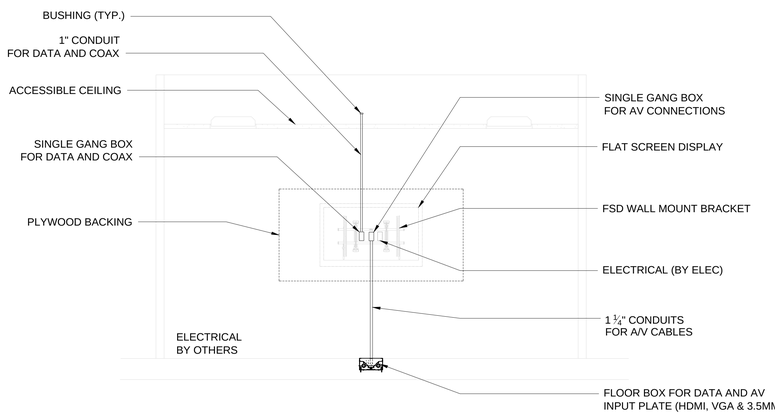

AV CONNECTION TO FLOOR BOX

NTS **2**

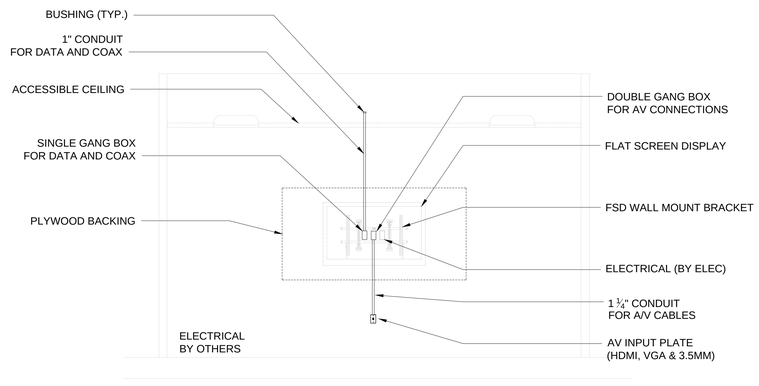

AV CONNECTION TO WALL INPUT PLATE

NTS **1**

HOUSTON AIRPORT SYSTEM

APPROVED

HOUSTON AIRPORT SYSTEM
DIRECTOR OR DESIGNATED
PDC REPRESENTATIVE

DATE

JACOBS

5985 Rogerdale Road
Houston, Texas
77072

P 832.351.6000
F 281.776.2501
W www.jacobs.com

TBPE Firm #2966

Consultants:

4b Technology Group, LLC

12600 Northborough Dr. #290
Houston, TX
77067

P 832.249.9379
F 832.249.9756
W www.4btechnology.com

Seals:

PRELIMINARY
THESE DOCUMENTS ARE INCOMPLETE AND MAY NOT BE USED FOR REGULATORY APPROVAL, PERMIT OR CONSTRUCTION.

Designer:	MARK BASFORD, BCDD
BCDD Reg. No:	1518198
Date:	08-04-2015

Project Client:

Houston Airport System

Project Address

Program Management Office

George Bush
Intercontinental Airport (IAH)

115 Standifer St.
Humble, TX 77338

Number	Description	Date
	95% REVIEW OF BRIDGING DOCUMENTS	21 MAY 2015
	100% BRIDGING DOCUMENTS	04 AUG 2015

Project No.:

Copyright: 2015 Jacobs Engineering

TDLR #:

Drawing Sheet Title:

AV DETAILS

Drawing Sheet Number:

TA-500

Owner's Drawing Sheet No.:

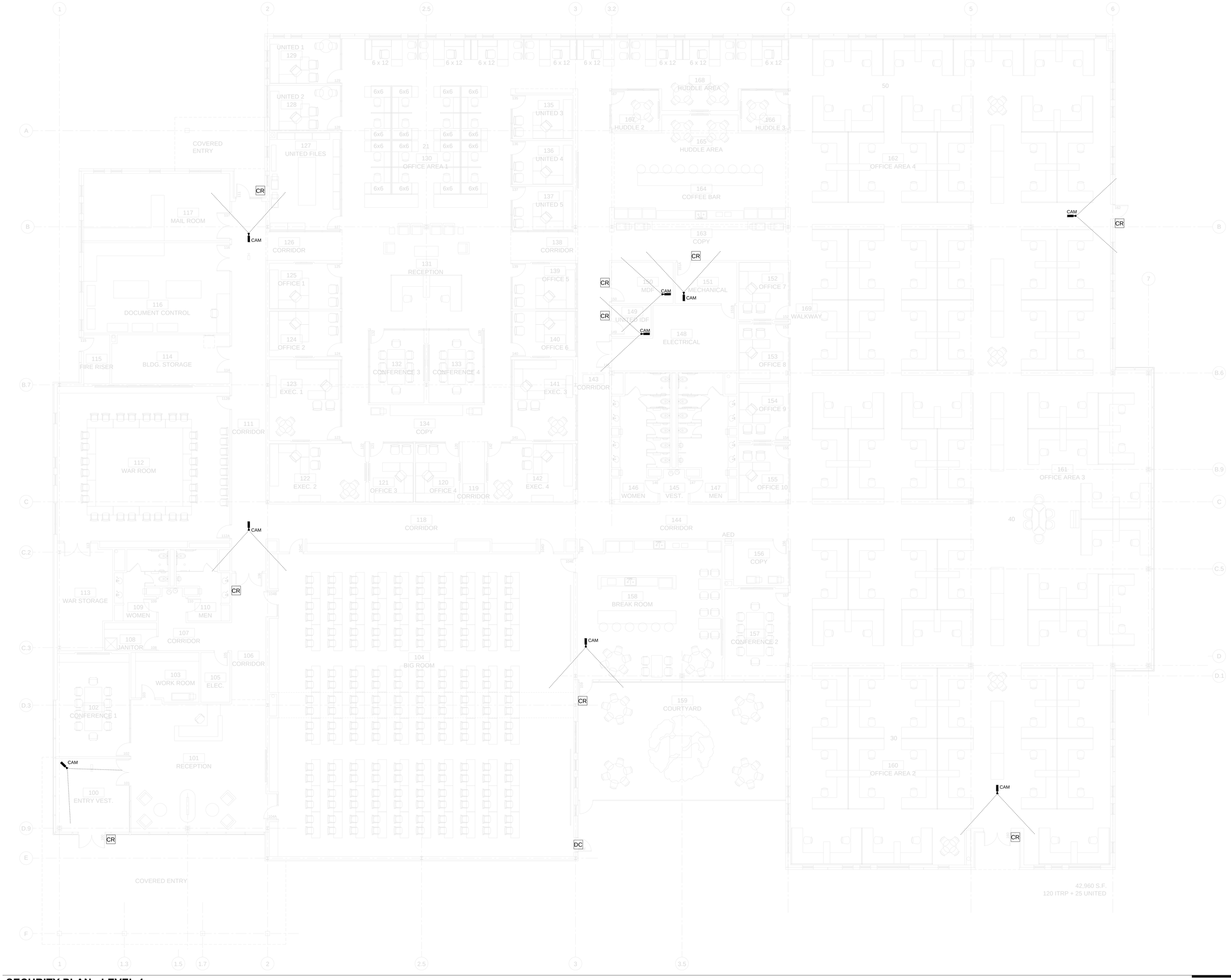

SECURITY PLAN - LEVEL 1

1/8"=1'-0" **1**

HOUSTON AIRPORT SYSTEM

APPROVED

HOUSTON AIRPORT SYSTEM
DIRECTOR OR DESIGNATED
PDC REPRESENTATIVE

DATE

JACOBS

5985 Rogerdale Road
Houston, Texas
77072

P 832.351.6000
F 281.776.2501
W www.jacobs.com

TBPE Firm #2966

Consultants:

4b Technology Group, LLC

12600 Northborough Dr. #290
Houston, TX
77067

P 832.249.9379
F 832.249.9756
W www.4btechnology.com

Seals:

PRELIMINARY
THESE DOCUMENTS ARE INCOMPLETE AND MAY NOT BE USED FOR REGULATORY APPROVAL, PERMIT OR CONSTRUCTION.

Designer:	MARK BASFORD, RCDD
RCDD Reg. No:	1518198
Date:	08-04-2015

Project Client:

Houston Airport System

Project Address

Program Management Office

George Bush
Intercontinental Airport (IAH)

115 Standifer St.
Humble, TX 77338

Number	Description	Date
	95% REVEW OF BRIDGING DOCUMENTS	21 MAY 2015
	100% BRIDGING DOCUMENTS	04 AUG 2015

Key Plan

Project North

Project No.:

Copyright: 2015 Jacobs Engineering

TDLR #:

Drawing Sheet Title:

SECURITY PLAN
LEVEL 1

Drawing Sheet Number:

TY-100

Owner's Drawing Sheet No.:

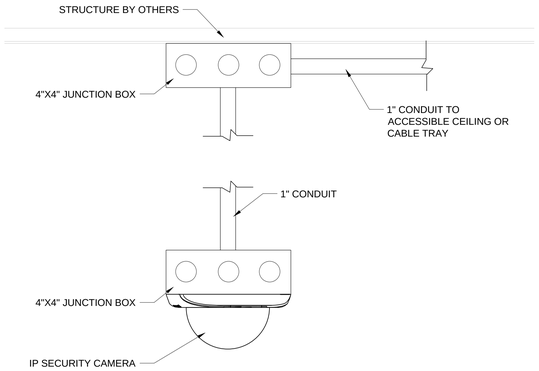

TYPICAL CEILING PENDANT MOUNT CAMERA DETAIL

NTS 3

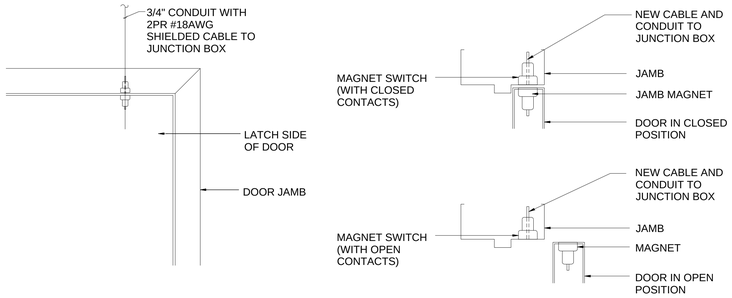

TYPICAL DOOR CONTACT DETAIL

NTS 5

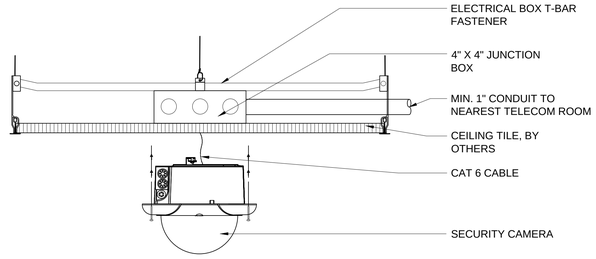

TYPICAL CEILING MOUNT CAMERA DETAIL

NTS 2

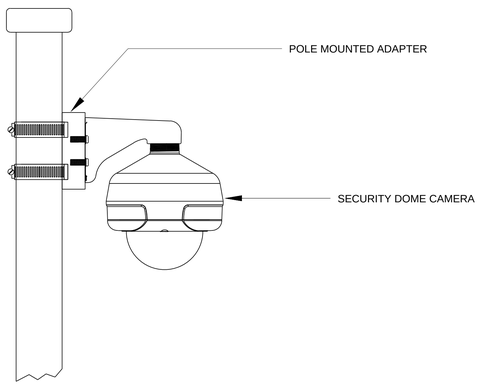

POLE MOUNTED CAMERA DETAIL

NTS 4

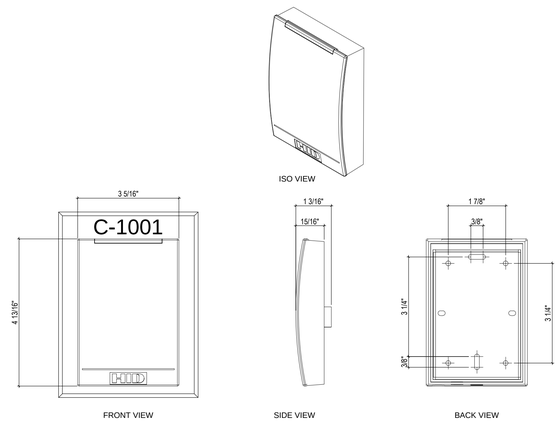

TYPICAL CARD READER DETAIL

NTS 1

HOUSTON AIRPORT SYSTEM

APPROVED

HOUSTON AIRPORT SYSTEM
DIRECTOR OR DESIGNATED
PDC REPRESENTATIVE

DATE

JACOBS

5985 Rogerdale Road
Houston, Texas
77072

P 832.351.6000
F 281.776.2501
W www.jacobs.com

TBPE Firm #2966

Consultants:

4b Technology Group, LLC

12600 Northborough Dr. #290
Houston, TX
77067

P 832.249.9379
F 832.249.9756
W www.4btechnology.com

Seals:

PRELIMINARY
THESE DOCUMENTS ARE INCOMPLETE AND MAY NOT BE USED FOR REGULATORY APPROVAL, PERMIT OR CONSTRUCTION.
Designer: MARK BASFORD, RCDD
RCDD Reg. No.: 151819R
Date: 08-04-2015

Project Client:

Houston Airport System

Project Address

Program Management Office

George Bush
Intercontinental Airport (IAH)

115 Standifer St.
Humble, TX 77338

Number	Description	Date
	95% REVIEW OF BRIDGING DOCUMENTS	21 MAY 2015
	100% BRIDGING DOCUMENTS	04 AUG 2015

Project No.:

Copyright: 2015 Jacobs Engineering

TDLR #:

Drawing Sheet Title:

SECURITY DETAILS

Drawing Sheet Number:

TY-500

Owner's Drawing Sheet No.: