REQUEST FOR PROPOSAL (RFP) No. T23538
FOR THE
OPERATION AND MAINTENANCE SERVICES
OF
THE GREATER NORTHEAST HOUSTON SERVICE AREA
WATER AND WASTEWATER UTILITIES AND FACILITIES

CITY OF HOUSTON
DEPARTMENT OF PUBLIC WORKS AND ENGINEERING

TABLE OF CONTENTS

Section

1. INFORMATION FOR PROPOSERS

1.1 BACKGROUND INFORMATION

1.2 NOTICE TO PROPOSERS

1.3 RESERVATION OF RIGHTS

1.4 PROPOSAL CONTENT

1.5 PROPOSAL SUBMISSION

2. SUPPLEMENTARY CONDITIONS

2.1 GENERAL

2.2 DUTIES OF CITY

3. PRICE PROPOSAL FORM

3.1 PRICING TEMPLATE (TO BE COMPLETED UPON COUNTER SIGNATURE DATE(S)

3.2 ACKNOWLEDGEMENT OF RECEIPT OF ADDENDA

4. BASIC SERVICES

4.1 GENERAL

4.2 WATER SYSTEM OPERATIONS

4.3 WASTEWATER OPERATIONS

4.4 UTILITY MAINTENANCE

4.5 SECURITY REQUIREMENTS

LIST OF APPENDICES

Appendix A Discharge Permit and Process Diagram – Kingwood Central WWTP

Appendix B Discharge Permit and Process Diagram – Forest Cove WWTP

Appendix C Discharge Permit and Process Diagram – Kingwood West WWTP

Appendix D Discharge Permit and Process Diagram – Cedar Bayou WWTP

Appendix E Discharge Permit and Process Diagram – West Lake Houston WWTP
(Facility to be added upon acceptance by the City of Houston)

Appendix F Historical Data - 24 Months of Electrical Consumption (KWh) at WWTPs

Appendix G Historical data - 24 Months of Sludge Produced/Disposed/Transported at WWTPs

Appendix H Historical data - 24 Months of Chemicals Utilized at WWTPs

Appendix I Historical data - 24 Months of Discharge Monitoring Reports (DMRs).

Appendix J Water Distribution Line Information

Appendix K Wastewater Collection Line Information

Appendix L Sample Valve Inspection Form

Appendix M Hydrant Preventative Maintenance 11 Point Inspection

Appendix N City of Houston Emergency Management Plan (HEMP)

Appendix O City of Houston, Sections of Utility Maintenance – Field Policy Manual

Appendix P City of Houston, Standard Specifications

Appendix Q Sample - Dead End Flushing Log

Appendix R Sample -Total Monthly Water Production Chart

Appendix S Sample - Total Daily Water Production Chart

Appendix T Additional Costs Emergency Power & Educational Outreach

LIST OF EXHIBITS

Exhibit 1	Fair Campaign Ordinance Requirements
Exhibit 2	Bidder's Bond
Exhibit 3	Performance Bond
Exhibit 4	Affidavit of Ownership
Exhibit 5	MWBE
Exhibit 6	Conflict of Interest Questionnaire
Exhibit 7	Sample Insurance Form
Exhibit 8	Rate Schedule for Additional Services
Exhibit 9	Drug Form
Exhibit 10	EEOC
Exhibit 11	Pay or Play Requirements
Exhibit 12	Pay or Play Certificate of Agreement
Exhibit 13	Maintenance Performance Statutory Bond
Exhibit 14	Sample Agreement

1. INFORMATION FOR PROPOSERS

1.1 BACKGROUND INFORMATION

1.1.1 Prospective Service Providers are invited to submit a proposal to the City of Houston, Texas (City) to provide full-service operation and maintenance of the Greater Northeast Houston Service Area Water and Wastewater Utilities and Facilities for a term of three (3) consecutive years with two one year options beginning July 1st, 2010.

1.1.2 This Request for Proposals (RFP) has been issued by the Director to provide proposers with information, guidelines, and rules to prepare and submit a Proposal. Proposals must satisfy all criteria established in this RFP to qualify for consideration.

1.1.2.1 The Director shall mean the Director of Public Works and Engineering for the City of Houston or his designee.

1.1.3 The title of the work described in the RFP is "Operation and Maintenance Services for the Greater Northeast Houston Service Area Water and Wastewater Utilities and Facilities."

1.1.4 The contract manager will be the Department of Public Works and Engineering located at the following address:

4545 Groveway
Houston, TX 77087

1.1.5 The purpose of this project is to effectively manage operation and maintenance of the Greater Northeast Houston Service Area Water and Wastewater Utilities and Facilities.

1.1.6 The objectives are to lower the capital and operating costs of all aspects of water and wastewater treatment, distribution, and collection, to improve the quality of water and wastewater services, and meet all regulatory requirements.

1.2 NOTICE TO PROPOSERS

1.2.1 The RFP may be examined at the City offices located on the second floor of 611 Walker, Houston, TX 77002. A copy of the RFP may be purchased from the City at the same location. On receipt of the RFP, proposers shall verify that documents are legible and complete.

1.2.2 Proposers shall be responsible for inspecting each facility and reviewing data provided by the Director. All available documents necessary to prepare the Proposal will be accessible to proposers. Failure to inspect each facility and review available data shall not relieve the proposer from responsibility for proper use of available information in preparation of the Proposal. Questions and requests for additional documents must be submitted in writing via e-mail to David Guernsey at David.Guernsey@cityofhouston.net, no later than 5:00 p.m. on Thursday, January 7th, 2010.

David Guernsey
Assistant Director
City of Houston, Department of Public Works and Engineering
319 St. Emanuel
Houston, TX 77002

1.2.3 If a proposer discovers any ambiguity, inconsistency, or error in the RFP, the proposer shall be required to seek an interpretation in writing as described in the previous paragraph before submitting the Proposal or otherwise shall be prohibited from taking advantage of such ambiguity, inconsistency, or error. If the proposer has not received a written clarification, the proposer shall be required to submit the Proposal on the basis of the highest price necessary to complete the task in question. Verbal discussions and answers are not binding.

1.2.4 The Director will reply to written questions and requests for clarification by addendum and proposers of record will be notified via e-mail when an addendum is available. Any addenda issued to the RFP become a part of the Agreement. Addenda will be issued by the Department of Public Works and Engineering in the City offices located 319 St Emanuel, Houston, TX 77002. Proposers shall be responsible for obtaining addenda after notification. Each proposer shall be responsible for ascertaining, prior to submitting a Proposal, that he has received all addenda issued.

1.2.5 Written proposals, other submissions, correspondence, and all records made thereof, as well as negotiations conducted pursuant to this RFP, shall be open and public after award of the Contract, in compliance with Texas law governing public records and meetings. Proposers acknowledge that all information contained within Proposals submitted in response to this RFP is part of the public domain as defined by the State of Texas Public Information Act. No information shall be labeled “Confidential” unless exempted under said law.

1.2.6 Proposers shall comply with City of Houston, Tex. Ordinance 95-336 (March 29, 1995) and Exec. Order No. 1-2 (June 14, 1995), and City of Houston Affirmative Action and Contract Compliance Division Minority/Women Business Enterprise (M/WBE) Procedures (June 1995), which revises Minority/Women Business Enterprise (M/WBE) Ordinance (Houston City Code, Ch. 15, Art. V). The selected proposer will be required to comply with provisions of the City's Equal Employment Opportunity Ordinance and to make good faith efforts to achieve a M/WBE participation goal of at least 14 percent of the total value of the Contract (i.e., Basic Services plus Additional Services).

1.2.7 A Pre-Proposal Conference will be held at 611 Walker, Room 2137, Houston, Texas 77002 on Thursday, January 14th, 2010, at 1:00 p.m.

1.2.8 The Proposal, submitted by the Service Provider awarded the Contract, will be incorporated by reference into the Agreement.

1.3 RESERVATION OF RIGHTS

1.3.1 City reserves the right to not award a contract if it so chooses.

1.4 PROPOSAL CONTENT

1.4.1 The proposal shall identify all terms and conditions associated with the services included in the Proposal. At a minimum, the technical proposal shall contain the following items (10-page maximum for each section):

- Executive Summary
- Service Provider Information
- Proposed Operating Plan
- Performance Bond Letter of Commitment
- Documentation of Certifications
- The cost proposal shall contain the following items:
    - Price Proposal Forms (refer to Section 3)
    - Bidders' Bond (Exhibit 2)

- Performance Bond (refer to Exhibit 3)
- Affidavit of Ownership (refer to Exhibit 4)
- Conflict of Interest Questionnaire (refer to Exhibit 6)
- Drug Form (Exhibit 9)
- Pay or Play Certificate of Agreement (Exhibit 12)
- Maintenance Performance Statutory Bond (Exhibit 13)

1.4.2 The Proposal shall be submitted on 8½ x 11-inch sheets in one loose-leaf binder with original signatures, labeled section dividers and 8 PDF copies on separate CDs. Text shall be double-spaced, and pages shall be single-sided use type font Arial size 11. Proposers must respond concisely to each of the requirements or questions presented in the following subsections. Each requirement or question must be responded to separately, with the requirement or question preceding each response.

1.4.3 In the "Service Provider Information" section of the Proposal, proposers must provide the following information in a clear and comprehensive manner. Failure to do so may result in disqualification.

- Provide the full name, tax identification number, and main office address of the entity that proposes to enter into the Agreement with the City and the proposed guarantor.
- Identify when the entity and its guarantor were organized and, if a corporation, where incorporated.
- State how many years the entity has been engaged in providing water and wastewater system operation and maintenance services under its current name.
- Identify the subcontractors and suppliers that the prospective Service Provider intends to use to perform the work described in the RFP. All subcontractors and suppliers are subject to approval by the Director.

1.4.4 In the “Operating Plan” section of the Proposal, proposers shall provide the following information in a clear and comprehensive manner:

1.4.4.1 Describe in detail proposed plans for management, operation, and maintenance of the Greater Northeast Houston Service Area Water and Wastewater Facilities including; but not limited to, project organization, organizational expertise, subcontractor roles, standard operating procedures, innovative approaches, and utilization of computerized maintenance management and Supervisory Control and Data Acquisition (SCADA) systems. Discuss any proposed improvements in operation and maintenance of the Greater Northeast Houston Service Area Water and Wastewater Utility. Specifically address compatibility of the Service Provider’s approach with the Director’s objectives.

1.4.4.2 Describe the maintenance program to be implemented by the prospective Service Provider to ensure that the capital investment made by City in existing and future utilities and facilities will be properly maintained and that the condition of equipment and facilities will be adequately tracked and documented. Include specific maintenance programs for mechanical equipment, instrumentation systems, electrical equipment, buildings and grounds. The maintenance program should include provisions for existing equipment not currently being used and equipment that might not be used in the future.

1.4.4.3 Describe proposed plans for processing and disposal of biosolids from each WWTP. There is equipment in place to use the Bioset Process for handling biosolids, but it is up to the provider to determine and notify the Director what the proposer’s plan is for handling the biosolids. The approval for handling is solely the Director’s.

1.4.4.4 Provide a detailed staffing plan indicating the number of full-time, part-time, and temporary positions that the prospective Service Provider considers necessary to provide services at a level that meets or exceeds specified requirements in the RFP.

- Summarize the staff required in a format similar to Table 1 below.
    - Include job titles, duties, and certification levels for each employee.
    - Provide a list of key personnel (i.e. project managers, chief operators).

- Provide a schedule that details the coverage for each shift of the proposed workweek including weekends and holidays.

- Describe in detail the costs necessary to achieve and maintain the Service Provider's staffing plan.

Table 1

Greater Northeast Houston Service Area

Example – Staffing Plan

Type of Employees	**Number of Positions**					
	2010	**2011**	**2012**	**2013**	**2014**	**2015**
Operation						
Maintenance						
Laboratory						
Total						

1.4.4.5 Provide a transition plan including temporary, short-term operational procedures and activities from contract execution through full assumption of responsibility.

1.4.5 If the selected proposer does not execute the Contract and furnish the required bonds within five (5) working days after the notice of award, the City will retain from the security deposit an amount equal to the difference between the bid of the selected proposer and the bid of the proposer who finally receives the Contract.

1.4.6 Proposers must provide letters of commitment from a State of Texas licensed bonding company to provide a performance bond as specified in Section 2-Supplementary Conditions. The performance bond letter of commitment must specifically accept the performance bond language stipulated in Document 000610-Performance Bond, located in Exhibit 3. In addition, the letter must acknowledge that the performance bond will be supplied in the dollar amount stipulated in Exhibit 3.

1.5 PROPOSAL SUBMISSION

1.5.1 The City Secretary will receive Proposals until 4:00 p.m. local time on Thursday, February 18th, 2010. Respondents may deliver their proposals to the City Secretary's office at the following address:

City Secretary's Office
City Hall Annex, Room P101
900 Bagby
Houston, TX 77002

Alternatively, respondents may mail their Proposals to the following address:

City Secretary's Office
P.O. Box 1562
Houston, TX 77251

1.5.2 Proposals shall not be valid unless sealed in a single, opaque envelope or box. On the outside of the envelope or box, clearly identify the proposer's name, project name, and file number. The outer envelope or box shall contain two (2) additional sealed envelopes or boxes. The technical proposal shall be sealed in one envelope or box, which shall be clearly marked as containing the technical proposal. The proposal shall be sealed in the other envelope or box, which shall be clearly marked as containing the proposal. One (1) original copy of the technical proposal and one (1) original copy of the proposal must be submitted. Failure to comply with these requirements may disqualify the Proposal.

1.5.3 Cost proposals for Basic Services must be submitted on the prescribed form in Section 3–Price Proposal Form. All blank spaces must be completed, printed legibly in ink or typed, and no changes shall be made in the phraseology of the form or in the items mentioned therein. At its sole discretion, the Director may reject any proposal that contains any omissions, erasures, alterations, additions, irregularities of any kind, or items not called for, or which does not contain a price for any item in the price proposal form.

1.2.6 Proposers shall comply with City of Houston, Tex. Ordinance 95-336 (March 29, 1995) and Exec. Order No. 1-2 (June 14, 1995), and City of Houston Affirmative Action and Contract Compliance Division Minority/Women Business Enterprise (M/WBE) Procedures (June 1995), which revises Minority/Women Business Enterprise (M/WBE) Ordinance (Houston City Code, Ch. 15, Art. V). The selected proposer will be required to comply with provisions of the City's Equal Employment Opportunity Ordinance and to make good faith efforts to achieve a M/WBE participation goal of at least 14 percent of the total value of the Contract (i.e., Basic Services plus Additional Services).

1.2.7 A Pre-Proposal Conference will be held at 611 Walker, Room 2137, Houston, Texas 77002 on Thursday, January 14th, 2010, at 1:00 p.m.

1.2.8 The Proposal, submitted by the Service Provider awarded the Contract, will be incorporated by reference into the Agreement.

1.3 RESERVATION OF RIGHTS

1.3.1 City reserves the right to not award a contract if it so chooses.

1.4 PROPOSAL CONTENT

1.4.1 The proposal shall identify all terms and conditions associated with the services included in the Proposal. At a minimum, the technical proposal shall contain the following items (10-page maximum for each section):

- Executive Summary
- Service Provider Information
- Proposed Operating Plan
- Performance Bond Letter of Commitment
- Documentation of Certifications
- The cost proposal shall contain the following items:
    - Price Proposal Forms (refer to Section 3)
    - Bidders' Bond (Exhibit 2)

- Performance Bond (refer to Exhibit 3)
- Affidavit of Ownership (refer to Exhibit 4)
- Conflict of Interest Questionnaire (refer to Exhibit 6)
- Drug Form (Exhibit 9)
- Pay or Play Certificate of Agreement (Exhibit 12)
- Maintenance Performance Statutory Bond (Exhibit 13)

1.4.2 The Proposal shall be submitted on 8½ x 11-inch sheets in one loose-leaf binder with original signatures, labeled section dividers and 8 PDF copies on separate CDs. Text shall be double-spaced, and pages shall be single-sided use type font Arial size 11. Proposers must respond concisely to each of the requirements or questions presented in the following subsections. Each requirement or question must be responded to separately, with the requirement or question preceding each response.

1.4.3 In the "Service Provider Information" section of the Proposal, proposers must provide the following information in a clear and comprehensive manner. Failure to do so may result in disqualification.

- Provide the full name, tax identification number, and main office address of the entity that proposes to enter into the Agreement with the City and the proposed guarantor.
- Identify when the entity and its guarantor were organized and, if a corporation, where incorporated.
- State how many years the entity has been engaged in providing water and wastewater system operation and maintenance services under its current name.
- Identify the subcontractors and suppliers that the prospective Service Provider intends to use to perform the work described in the RFP. All subcontractors and suppliers are subject to approval by the Director.

1.4.4 In the “Operating Plan” section of the Proposal, proposers shall provide the following information in a clear and comprehensive manner:

1.4.4.1 Describe in detail proposed plans for management, operation, and maintenance of the Greater Northeast Houston Service Area Water and Wastewater Facilities including; but not limited to, project organization, organizational expertise, subcontractor roles, standard operating procedures, innovative approaches, and utilization of computerized maintenance management and Supervisory Control and Data Acquisition (SCADA) systems. Discuss any proposed improvements in operation and maintenance of the Greater Northeast Houston Service Area Water and Wastewater Utility. Specifically address compatibility of the Service Provider’s approach with the Director’s objectives.

1.4.4.2 Describe the maintenance program to be implemented by the prospective Service Provider to ensure that the capital investment made by City in existing and future utilities and facilities will be properly maintained and that the condition of equipment and facilities will be adequately tracked and documented. Include specific maintenance programs for mechanical equipment, instrumentation systems, electrical equipment, buildings and grounds. The maintenance program should include provisions for existing equipment not currently being used and equipment that might not be used in the future.

1.4.4.3 Describe proposed plans for processing and disposal of biosolids from each WWTP. There is equipment in place to use the Bioset Process for handling biosolids, but it is up to the provider to determine and notify the Director what the proposer’s plan is for handling the biosolids. The approval for handling is solely the Director’s.

1.4.4.4 Provide a detailed staffing plan indicating the number of full-time, part-time, and temporary positions that the prospective Service Provider considers necessary to provide services at a level that meets or exceeds specified requirements in the RFP.

- Summarize the staff required in a format similar to Table 1 below.
    - Include job titles, duties, and certification levels for each employee.
    - Provide a list of key personnel (i.e. project managers, chief operators).

- Provide a schedule that details the coverage for each shift of the proposed workweek including weekends and holidays.

- Describe in detail the costs necessary to achieve and maintain the Service Provider's staffing plan.

Table 1

Greater Northeast Houston Service Area

Example – Staffing Plan

Type of Employees	**Number of Positions**					
	2010	**2011**	**2012**	**2013**	**2014**	**2015**
Operation						
Maintenance						
Laboratory						
Total						

1.4.4.5 Provide a transition plan including temporary, short-term operational procedures and activities from contract execution through full assumption of responsibility.

1.4.5 If the selected proposer does not execute the Contract and furnish the required bonds within five (5) working days after the notice of award, the City will retain from the security deposit an amount equal to the difference between the bid of the selected proposer and the bid of the proposer who finally receives the Contract.

1.4.6 Proposers must provide letters of commitment from a State of Texas licensed bonding company to provide a performance bond as specified in Section 2-Supplementary Conditions. The performance bond letter of commitment must specifically accept the performance bond language stipulated in Document 000610-Performance Bond, located in Exhibit 3. In addition, the letter must acknowledge that the performance bond will be supplied in the dollar amount stipulated in Exhibit 3.

1.5 PROPOSAL SUBMISSION

1.5.1 The City Secretary will receive Proposals until 4:00 p.m. local time on Thursday, February 18th, 2010. Respondents may deliver their proposals to the City Secretary's office at the following address:

City Secretary's Office
City Hall Annex, Room P101
900 Bagby
Houston, TX 77002

Alternatively, respondents may mail their Proposals to the following address:

City Secretary's Office
P.O. Box 1562
Houston, TX 77251

1.5.2 Proposals shall not be valid unless sealed in a single, opaque envelope or box. On the outside of the envelope or box, clearly identify the proposer's name, project name, and file number. The outer envelope or box shall contain two (2) additional sealed envelopes or boxes. The technical proposal shall be sealed in one envelope or box, which shall be clearly marked as containing the technical proposal. The proposal shall be sealed in the other envelope or box, which shall be clearly marked as containing the proposal. One (1) original copy of the technical proposal and one (1) original copy of the proposal must be submitted. Failure to comply with these requirements may disqualify the Proposal.

1.5.3 Cost proposals for Basic Services must be submitted on the prescribed form in Section 3–Price Proposal Form. All blank spaces must be completed, printed legibly in ink or typed, and no changes shall be made in the phraseology of the form or in the items mentioned therein. At its sole discretion, the Director may reject any proposal that contains any omissions, erasures, alterations, additions, irregularities of any kind, or items not called for, or which does not contain a price for any item in the price proposal form.

1.5.4 The basis of the proposal shall be the scope of work for Basic Services detailed in the RFP, the sample Contract in Exhibit 14 - Sample Contract and the pricing template in Section 3 – Price Proposal Form. Unless otherwise specified, lump sum annual prices shall be based upon all inclusive costs for chemicals, equipment, and other commodities delivered to the Greater Northeast Houston Service Area.

1.5.5 The proposer shall sign the proposal form. If a partnership or corporation makes the proposal, the name and address of the partnership or corporation shall be shown together with the names and addresses of the partners or officers. If the proposal is made by a partnership, it must be acknowledged by one of the partners; if made by a corporation, by one of the officers thereof, as witnessed by an attached corporate resolution to that effect.

1.5.6 Each proposer must be thoroughly familiar with the scope of work and performance specifications in the RFP. Failure to do so will not relieve the selected Service Provider of its obligation to complete the work described in the RFP in conformance with specified performance requirements.

1.5.7 Proposals submitted early may be modified or withdrawn by written notice to the City Secretary at the place and prior to the time designated for receipt of Proposals. Such notice shall be signed by the proposer and shall be so worded as not to reveal the amount of the original bid. Oral, telephonic, facsimile, or telegraphic modification of Proposals will not receive consideration. Withdrawn Proposals may be resubmitted up to the time designated for receipt of Proposals.

2. SUPPLEMENTARY CONDITIONS

2.1 GENERAL

2.1.1 Where the requirements of local building code(s) or other laws, regulations or rules promulgated by governmental agencies having jurisdiction conflict with provisions in the Contract and are mandatory, such requirements shall be followed, the same as if specifically set out herein in full. Provisions of the Contract, which are more restrictive than the minimum requirements of such codes or regulations, shall be followed, and no provision of the Contract may be modified or voided because it is not specifically required by such codes and regulations.

2.1.2 The Director reserves the right to negotiate additions to the Scope of Work for Basic Services after execution of the Contract without invalidating the Contract and without notice to the Contractor's Surety. Each change in the Scope of Work for Basic Services will require approval by the Director.

2.1.3 All City-owned land, building, improvements, and permanent equipment, presently in place and being used for operation and maintenance of Greater Northeast Houston Service Area, and any new facilities or equipment added by any capital improvement project, shall remain or become the property of the City. If the Service Provider implements any facility improvements, such improvements shall become the property of the City. The Service Provider shall receive authorization from the Director prior to making any improvements or changes.

2.1.4 The Service Provider acknowledges by entering into the Agreement that the Director has the right to inspect the facilities, system, records (financial and non-financial), and performance of the Service Provider with regard to Greater Northeast Houston Service Area at any reasonable time.

2.1.5 Records and data generated, collected and/or maintained by the Service Provider over the duration of the Agreement, except personnel records, shall remain and becomes the property of the City. The Service Provider shall provide immediate access to any records requested by the Director.

2.1.6 The Service Provider shall allow and cooperate with City personnel, contractors involved in capital improvement projects executed by the City, and other users authorized by the Director, working in the Greater Northeast Houston Service Area.

2.1.7 The Service Provider shall notify the Director of any proposed change of a subcontractor or supplier. The Director reserves the right to reject a proposed subcontractor or supplier for reasonable cause.

2.1.8 The service provider will be responsible for:

2.1.8.1 Public notifications except boil water notifications.

2.1.8.2 Preparation and submission of wastewater effluent discharge monitoring reports.

2.1.9 The Director may perform on-site construction projects related to the work and as part of the operations with the City's workforce or with separate contractor.

2.1.10 Payment for Additional Services will be made in accordance with provisions of the Contract and unit prices stipulated in Exhibit 8-Rate Schedule for Additional Services. A Work Order authorized by the Director shall be submitted with each request for payment of Additional Services pertaining to any services.

2.2 DUTIES OF CITY

2.2.1 The Director will perform or pay third parties to perform the following tasks related to water production and distribution:

2.2.1.1 Water meter reading, water meter maintenance, and customer billing.

2.2.1.2 Sampling and analyses required by 30 TAC 290 Subchapter F, excluding microbial contaminants and disinfectant residuals.

2.2.1.3 Preparation and delivery of consumer confidence reports including reporting and record keeping requirements.

2.2.1.4 Distribute boil water notifications (refer to 30 TAC §290.46(q)) to customers of affected water systems within 24-hours as required by 30 TAC §290.47(e). When the boil water notification is no longer in effect, the City shall notify affected customers in a similar manner.

2.2.2 All City-owned land, buildings, improvements, and permanent equipment, presently in place and being used for operation and maintenance of Greater Northeast Houston Service Area, and any new facilities or equipment added by any capital improvement project, shall be made available to the Service Provider for its use without charge. Such facilities shall be used solely for the purpose of operating and maintaining the Greater Northeast Houston Service Area.

2.2.3 Expendable supplies and spare parts on hand on the date of contract execution shall be inventoried as specified in the RFP. Such materials shall be available to the Service Provider for its use within the Greater Northeast Houston Service Area during the term of the Agreement without charge, but the Service provider shall maintain the inventory. At termination of the Agreement, the City inventories shall be fully replenished with like materials or substitutes approved by the Director.

2.2.4 The Director will not pay for two-way communications, mobile phone services, land-based local or long-distance telephone services, pager services, or internet services.

3. PRICE PROPOSAL FORM

3.1 PRICING TEMPLATE (TO BE COMPLETED UPON COUNTER SIGNATURE DATE(S))

This document may not be modified, amended, nor qualified in any manner. Only the blank spaces are to be filled in. All blank spaces must be filled-in. Any non-compliance with this instruction may result in disqualification of the proposer.

1. Total Operation and Maintenance Fee, Water Production Facilities (Wells, Pumps, GSTs, ESTs, etc.):

Year 1 (____ thru ____)	Year 2 (____ thru ____)	Year 3 (____ thru ____)	Year 4 (____ thru ____)	Year 5 (____ thru ____)	Total

2. Total Operation and Maintenance Fee, Wastewater Treatment Facilities and Lift Stations:

Year 1 (____ thru ____)	Year 2 (____ thru ____)	Year 3 (____ thru ____)	Year 4 (____ thru ____)	Year 5 (____ thru ____)	Total

3. Total Operation and Maintenance Fee, Water Distribution Systems (Lines, Services, Hydrants, Valves, etc.):

Year 1 (____ thru ____)	Year 2 (____ thru ____)	Year 3 (____ thru ____)	Year 4 (____ thru ____)	Year 5 (____ thru ____)	Total

4. Total Operation and Maintenance Fee, Wastewater Collection Systems (Gravity Lines, Services, Force Mains, Manholes, etc.):

Year 1 (____ thru ____)	Year 2 (____ thru ____)	Year 3 (____ thru ____)	Year 4 (____ thru ____)	Year 5 (____ thru ____)	Total

5. Grand Total Cumulative Operation and Maintenance Fee:

Year 1 (____ thru ____)	Year 2 (____ thru ____)	Year 3 (____ thru ____)	Year 4 (____ thru ____)	Year 5 (____ thru ____)	Total

CITY OF HOUSTON, TEXAS
OPERATION AND MAINTENANCE SERVICES FOR THE GREATER NORTHEAST HOUSTON SERVICE AREA UTILITIES AND FACILITIES

PRICE PROPOSAL SUMMARY FOR

_____
(Print or type name of Service Provider – full Company name)

Basic Service Fee for _____, 20__ to _____, 20__: $_____

Basic Service Fee for _____, 20__ to _____, 20__: $_____

Basic Service Fee for _____, 20__ to _____, 20__: $_____

Basic Service Fee for _____, 20__ to _____, 20__: $_____

Basic Service Fee for _____, 20__ to _____, 20__: $_____

5 Year Unadjusted Total: $_____

Payment for Additional Services not listed shall be based on the Coefficient factor of _____ multiplier times the sum of applicable unit prices in the R.S. Means Cost Data books (latest edition in effect at that time). For this Agreement, the unit price shall be the "Total Bare Costs" column in the R.S. Means Cost Data books adjusted using the Houston, Texas Cities Cost Index "total weighted average". Each unit price is comprised of the overhead, labor burden, profit, equipment, and material costs to accomplish that specific task.

3.2 ACKNOWLEDGEMENT OF RECEIPT OF ADDENDA

The following Addenda have been received. The modifications to the RFP noted therein have been considered and all costs relating thereto are included in the price for Basic Services.

Addendum No. _____, dated _____

Addendum No. _____, dated _____

Addendum No. _____, dated _____

Addendum No. _____, dated _____

Addendum No. _____, dated _____

Addendum No. _____, dated _____

SUPPLEMENTS TO THIS BID:

The following Supplements are attached as an integral part of this Proposal:

[X] Document 00431 - Contractor Submission List (see Exhibit 1- Fair Campaign Ordinance Requirements)

[X] Security Deposit (see Exhibit 2 - Bidder's Bond)

[X] MWBE Agreement (see Exhibit 5)

[X] Conflict of Interest Questionnaire (see Exhibit 6)

Respectfully Submitted:_____
(Signature of authorized officer or agent)

_____
(Printed Name, Title and Date)

Attest/Witness:_____
(Signature)

_____
(Printed name, Title and Date)

Address of Contractor:

_____ Telephone: _____

_____ Fax: _____

_____

_____
(Signature, name, and title of affiant)

Notary Public in and for _____County, State of _____

My Commission Expires:

The _____ day of _____, 20___.

(If Proposal is from a **Corporation**, a Corporate Resolution authorizing the signature on this bid must be attached).

(If Proposal is from a **Partnership**, an acknowledgement of one of the partners must be attached.)

(Names and addresses of all partners or corporate officers, as appropriate, must be attached.)

4. BASIC SERVICES

4.1 GENERAL

4.1.1 Definitions

- Dilute Solids shall mean wastewater containing 0.5% to 5% solids.
- Solids shall mean solid material other than biosolids. This includes sand and grit, rags, scum, and other typical wastewater debris, etc.
- Biosolids shall mean wastewater solids that have been processed according to the provisions of 40 CFR Part 503 and 30 TAC, Chapter 312, so that they can be land applied.
- End-Dump Trailer shall mean a semi-trailer whose tractor-end can be raised so that the material in the trailer can slide out through the tailgate. An end-dump trailer shall be able to carry at least 50,000 lbs of biosolids or solids.
- Roll-on / Roll-off Container shall mean a truck transportable container which can hold at least 26 cubic yards of biosolids within its outside dimensions.
- Additional Services shall refer to services that extend beyond Basic Services that are mentioned in this proposal.

4.1.2 Provide personnel and associated wages, salaries, and benefits; equipment (except existing City-owned, permanently installed equipment); vehicles; laboratory apparatus; computers; fuels; electricity; chemicals; tools; storage space; and other incidentals necessary to operate and maintain the Greater Northeast Houston Service Area Water and Wastewater Utilities and Facilities in accordance with applicable laws, regulations, ordinances, permits, industry standards, equipment manufacturer's recommendations and the Agreement. Incidentals provided by the Service Provider shall include, but not be limited to, the following:

- Office furniture
- Telephone equipment

- Copiers
- Printers
- Fax machines.
- Copies of reports and records.

The Service Provider shall operate and maintain (O&M) the Water and Wastewater Facilities in compliance with all applicable laws and regulations. As described below, the Service Provider shall be responsible for all aspects of operation and maintenance, including providing all labor, materials, and utilities necessary. The Service Provider shall maintain all collection system lift stations, ground water production wells, storage tanks and perform routine repairs to the water and wastewater mains within the distribution and collection systems. The Service Provider shall also establish a preventive Maintenance program within the first sixty (60) days of the contract for all City Owned equipment they will be responsible for. A copy of their program shall be provided to the Director.

The Service Provider may also perform certain emergency repair and capital improvement work as authorized by the City of Houston as part of additional services.

Any lubricants or bulk chemicals proposed to be utilized by the Service Provider at the Water and Wastewater Facilities must comply with ANSI/NSF Standards.

The Service Provider will operate the Greater Northeast Houston Service Area Water and Wastewater Facilities in accordance with the Service Agreement and attached Appendices. Operational decision making will reflect the following minimum objectives:

- Protecting public health and welfare;
- Protecting the health and safety of the plant operating staff;
- Complying with all applicable laws, rules, regulations and ordinances, including without limitation, City, State, and Federal water quality and supply requirements and safety requirements;
- Protecting the environment;
- Protecting and preserving the plant equipment and facilities; and
- Maximizing plant operational efficiency and minimization of operating costs.

The Service Provider shall develop and implement procedures to ensure attainment of these goals, including going beyond the minimum requirements set forth in the Service Agreement. The Service Provider's responsibilities include, but are not necessarily limited to:

- Providing a Texas Class "B" licensed Ground Water Operator and a Texas Class "A" licensed Wastewater Operator who will be in charge of the operation of the Water and Wastewater Facilities. The Director shall retain the right to approve or accept the proposed Water and Wastewater Operator/s. Copies of the professional resume, credentials and certifications shall be submitted to the Director for approval. This operator/s will be a full-time employee dedicated solely to the Treatment Facility and will also be responsible during evening call-outs. In addition, prior to any change in the Operator at the site, the Director must be notified in writing and a suitable replacement approved by the Director;

- Staffing the Treatment Facility in accordance with the Service Provider's proposed staffing plan and at a minimum consistent with the requirements of the State of Texas. This shall include at least one Texas Class "C" licensed Ground Water Operator or higher onsite during each shift. This shall include at least one Texas Class "B" licensed Ground Water Operator or higher onsite who will bear overall responsibility for operation and maintenance of the Water Systems and sign all reports or certifications submitted to regulatory agencies. Any changes in the staffing plan must be approved by the Director;

- Providing all materials, both durable and consumable, and supplies necessary to operate and maintain the Water and Wastewater Facilities, including but not limited to chemicals, utilities, residuals management, rolling stock, and consumables. The payment for all such items is described in the Service Agreement;

- Add additional chemicals as directed by the Director to address periodic water quality problems;

- Cooperating with the City of Houston and third party Service Providers who will be responsible for expanding the capacity and upgrading the Water and Wastewater Utilities and Facilities during the Service Term of this Service Agreement. The Service Provider will cooperate with these parties to minimize production disruptions and to maintain compliance with the performance standards and all applicable law.

- Responding immediately to emergency or disaster situations in a manner equal to or better than existing plans, and in accordance with the current “Emergency Operations Plan of the Department of Public Works and Engineering” and the approved Emergency Response and Risk Management plans.

- As authorized by the Director, provide emergency repair services to the Water and Wastewater Facilities and related infrastructure, in accordance with the Additional Services provisions of this Agreement.

- The Service Provider shall submit a plan to provide community outreach program for the GNEHSA that is designed to provide education and information about water conservation, fats, oils, and grease. The cost for the program shall be listed as an Additional Cost under Appendix T.

4.1.3 Provide seven day per week, 24 hour per day operational coverage for the Greater Northeast Houston Service Area Water and Wastewater Utilities and Facilities.

- At a minimum, the Service Provider shall have operating personnel on the premises of the Greater Northeast Houston Service Area Water and Wastewater Utilities and Facilities eight (8) hours per day between 7:00 a.m. and 6:00 p.m. Monday through Friday, excluding City holidays, unless directed otherwise by the Director.

- After normal working hours as defined above, the Service Provider shall provide sufficient on-call staff to manage necessary Basic Services and Emergency Services. On call staff shall be reachable by mobile phone or other means approved by the Director 24 hours per day, 7 days per week.

- All employees of the Service Provider on the premises of the Greater Northeast Houston Service Area shall observe and, when necessary, promptly report any operating problems or irregularities to the Director, 7 days a week.

- The Service Provider shall program all computer or automatic telephone systems to call such dispatch number and further shall monitor such alarms and promptly respond to all alarm signals.

4.1.4 Provide a Project Manager who will be the single point of contact for all contract compliance and administrative issues. The Project Manager, proposed by the Service Provider, shall be subject to approval by the Director.

4.1.5 Provide a transition team including, at a minimum, the Service Provider's project manager and chief operators of the water and wastewater systems for a 30 day transition period prior to the service commencement date. Upon receiving a notice to proceed, the Service Provider shall implement a detailed transition plan to begin to assume responsibility for the Water and Wastewater Facilities. These transition services are intended to ensure that the Service Provider is fully able to commence operations of the Water and Wastewater Facilities on July 1, 2010. This shall include:

- Recruiting staff necessary to fill all positions required by the Service Provider's staffing plan;

- Monitoring plant operations for at least 7 days on multiple shifts prior to assuming operational responsibility;

- Develop, supply and implement a Computerized Maintenance Management System (CMMS) incorporating the specifications and requirements described in Section 4.1.11 below. Such system shall use the systems currently employed by the City (Datastream 7i Work Management System) The CMMS shall be fully implemented within 60 days of the effective start date given in the Notice to Proceed. Failure to have the system implemented by this date could result in the City of Houston retaining a portion of the Service Provider's fee until implementation is complete;

- Preparing within sixty (60) days of the effective start date given in the Notice to Proceed and obtaining Director's approval within ninety (90) days of the onset of effective start date given in the Notice to Proceed, an Emergency Response Plan and a Risk Management Plan. The Emergency Response Plan should include the Service Provider's plan to provide backup power to the facilities that do not have backup generators. The Service Provider may bring in company owned portable generators, however if the Service Provider intends to lease the generators then a copy of the lease agreement should be included in his plan. The cost of those generators should be listed separate in the proposal as Additional Cost under Appendix T. Failure to have the plans approved by this date could result in the Director retaining a portion of the Service Provider's fee until the plans are approved; and

- Conducting an inventory and certifying to the Director the quantities of materials, supplies, fuel and other consumables on site at the time service commences.

4.1.6 Provide administrative and technical support services as required to ensure efficient operation and maintenance of the Greater Northeast Houston Service Area. Support services subcontractor(s), proposed by the Service Provider, shall be subject to approval by the Director.

4.1.7 Conduct an inspection of facilities and equipment (electrical, mechanical, HVAC, computer, instrumentation, etc.) with the Director within thirty (30) calendar days, following the Notice to Proceed date, unless instructed otherwise by the Director, and annually thereafter.

4.1.8 Submit an initial inventory that documents the condition and operational status of major and minor pieces of equipment and the amount of expendable supplies and spare parts within forty-five (45) calendar days following the Notice to Proceed date, unless instructed otherwise by the Director.

- Each party shall maintain a copy of the initial inventory, signed by the Service Provider and the Director.

- The Service Provider shall maintain and update the equipment inventory annually throughout the Contract term.

4.1.9 Prepare, submit, and justify a detailed annual report on recommended capital expenditures to restore, replace or upgrade equipment or facilities for efficiency, safety, function and/or compliance with current and/or anticipated regulatory requirements. Submit the report to the Director by November 1 of each year, unless instructed otherwise by the Director (or his designee).

4.1.10 Performance Standards

The Service Provider shall be responsible for meeting the following performance standards:

4.1.10.1 Meeting the Quality Performance Standards set forth in the Service Agreement.

4.1.10.2 Meeting the Effluent Discharge Permit Requirements set forth in the Service Agreement.

4.1.10.3 Performing all of the Service Provider's obligations as set forth in the Service Agreement.

4.1.10.4 Performing the preventive maintenance as set forth in the Service Agreement.

4.1.10.5 Installing and fully implementing the CMMS within 60 days of the effective start date given in the Notice to Proceed.

4.1.10.6 Correcting within 60 days any deficiencies identified through the required preventive and predictive maintenance program or the City of Houston's Facility and equipment audits. If it is not possible to rectify a particular deficiency within 60 days, then the Service Provider shall provide the Director with a written plan for completing the work.

4.1.11 Facilities Maintenance

The Service Provider shall be responsible for all aspects of maintenance at the Greater Northeast Water and Wastewater Utilities and Facilities, including corrective, preventative, and predictive maintenance. The Service Provider will be required to develop and implement maintenance procedures to ensure attainment of the objectives. This includes, at a minimum, responding to corrective maintenance needs in a timely and appropriate manner.

The Service Provider will use the CMMS system currently used by the City of Houston (Datastream 7i). The CMMS will incorporate the preventative maintenance standards and schedules for all major operational equipment in accordance with the manufacturer's O&M manuals. The software will be set up to provide the reports and information for the monthly operations reports. The Director will provide the Service Provider access to the CMMS system, but the Service Provider will be responsible for the entry of all equipment information and all preventive and corrective maintenance work items. In addition, the Service Provider will be responsible for updating and maintaining the accuracy of the information contained in the CMMS for the Greater Northeast Houston Water and Wastewater Facilities as equipment is repaired, added or replaced. This data entry shall be completed within 60 days of the commencement of operations by the Service Provider.

Following the completion of the equipment data entry, the Service Provider shall be required to provide monthly summary reports on preventive and corrective maintenance performed, in accordance with the reporting capabilities in the City's CMMS. The Director will provide the necessary training to the Service Provider's staff on the use of the CMMS and will pay for additional licenses, as needed, for the Service Provider's staff.

The Service Provider shall provide necessary corrective, preventative and predictive maintenance for all systems, structures and equipment at the plant. The Service Provider shall be responsible for

providing all required maintenance for the entire plant, including all systems, structures and equipment; (2) maintenance as required by the manufacturer of the equipment; and (3) all generally accepted engineering, operational and maintenance practices for a facility of this size and type. If a piece of equipment fails, the Director will determine whether the Service Provider had followed the required maintenance procedures. If the Service Provider had been deficient, then the Service Provider is responsible for the entire cost of the repair or replacement. In addition, the Service Provider shall:

4.1.11.1 Perform all necessary preventive maintenance on installed cathodic protection at the Greater Northeast Houston Water and Wastewater Utilities and Facilities. All needed repairs must be made to ensure the integrity and operability of the system.

4.1.11.2 Inspect annually all tanks and piping systems, including the ground storage tanks and aeration basins. Piping that is equipped with heat tracing shall be inspected prior to winter conditions, and repaired as necessary.

4.1.11.3 Perform maintenance on all chlorine feed systems, including relief-valves, evaporators, and vacuum regulators on a bi-annual basis, per manufacturer's specifications. This shall include complete disassembly of the units and repair or replacement as necessary.

4.1.11.4 Perform maintenance on flexible metal tubing used to connect chlorine supply cylinders to piping systems, according to manufacturer's and the Chlorine Institute's specifications, and replace on an annual basis or sooner if needed.

4.1.11.5 Perform annual vibration analysis testing of major rotating equipment. The Service Provider shall perform interpretation and analysis of test results and submit an evaluative written report in an approved format to the Director, including necessary action plans. The Service Provider shall promptly address any deficiencies identified in the testing report.

4.1.11.6 Perform annual oil sampling of major pumps, motors and blowers. The Service Provider shall perform interpretation and analysis of test results and submit an evaluative written report in an approved format to the Director. The Service Provider shall promptly address any deficiencies identified in the testing report.

4.1.11.7 Inspect, maintain and test all backflow preventers within the Greater Northeast Houston Water and Wastewater Utilities and Facilities operated or maintained by the Service

Provider in accordance with Texas Commission on Environmental Quality (TCEQ) requirements, and at least annually perform calibration and testing.

4.1.11.8 Touch up paint on any equipment or facilities as needed to minimize corrosion and maximize service life.

4.1.11.9 Conduct annual infrared inspections of all motor control centers, transformers and motor connections greater than 60 hp.

4.1.11.10 Conduct an initial instrument calibration of all existing installed monitoring and measuring devices for flow, pH, temperature, pressure, turbidity, chlorine residual, etc. The Service Provider shall provide a report demonstrating that the instruments have been calibrated successfully according to manufacturer's specifications within sixty (60) days of onset of the effective start date given in the Notice to Proceed.

4.1.11.11 Conduct an initial loop verification of all reportable monitoring parameters from field instruments back to the data output locations within sixty (60) days of the effective start date given in the Notice to Proceed, and provide a written report of results to the Director.

4.1.11.12 Perform periodic calibration of instruments in accordance with manufacturer's recommended procedures.

4.1.11.13 Repair expansion joints to maintain integrity of concrete structures and prevent leaks.

4.1.11.14 All Sanitary Sewer Overflows (SSOs) must be reported within 24 hours including actions taken.

4.1.12 The Service Provider must perform the following items if a piece of equipment is to be removed from service:

a. Notify the Director in writing that equipment is planned to be removed from service why this activity is needed, when the equipment will be returned to service and what scheduled maintenance will be completed while in storage.

b. Any chemical system that the Service Provider would like to remove from service must have the following services performed:

- Tanks must be cleaned and flushed out completely with water or the proper cleaning agent for the tank. All cleaning agents must be FDA, ANSI/NSF 60 approved for use.

- All chemical lines that are associated with the system must be cleaned out and flushed out completely with water or the proper cleaning agent for the tank.

- All mixing equipment must be cleaned and parts lubricated to prevent corrosion.

- All rotating equipment such as pumps and motors must be rotated on a weekly schedule. This can be performed by hand or by energizing the system.

- Electrical motor heaters must remain energized to prevent condensation.

- Chlorine systems removed from service will be purged with nitrogen gas and the lines plugged.

- Treatment process units shall not be taken out of service for periods longer than ninety (90) days, unless otherwise approved by the Director.

4.1.13 If the Service Provider removes equipment from service, then the preventive maintenance specified by the manufacturer must continue to be performed to maintain the equipment in a state of operational readiness.

The Service Provider is required to notify the Director in writing one week prior to performing preventive maintenance tasks on major equipment, as the Director may have a representative witness the Service Provider perform the preventive maintenance task.

The Service Provider will be responsible for maintaining the physical facilities of the Greater Northeast Houston Water and Wastewater Utilities and Facilities. This will include at a minimum:

a. All spare parts, materials and supplies shall be stored in an orderly manner;

b. Quarterly interior and exterior window washing;

c. Roof leak repair within twenty-four hours of discovery;

d. Regular pest control including fire ant control;

e. As needed pest control for capture and removal of pest animals which may cause destruction of property or endanger treatment processes;

f. Immediate repair of all plumbing and piping leaks and failures;

g. Damp mop all floors weekly with an approved solution;

h. External cleaning, such as pressure washing of the ground storage tanks and similar facilities at least annually;

i. Apply floor finish as necessary to maintain appearance and safety standards on worn spots and high traffic areas;

j. Walls will be cleaned every six months, and touch up paint applied as necessary

k. Tile walls will be washed every six months;

l. Repair of cracks or spauled concrete and expansion joints;

m. Weed control will be performed in paved areas to keep cracks and joints clear of vegetation;

4.1.14 Utilities Maintenance

The City of Houston maintains an Information Management System (IMS) for all work orders performed on the water distribution and wastewater collection utility lines and appurtenances. This system is also used to document and track customer complaints. The Service Provider will be given access to this system and shall perform work order development and tracking in accordance with the Department of Public Works and Engineering's policies and procedures. The Director will provide the Service Provider's staff with the necessary training on the use of the system, but the Service Provider shall be responsible for all work items related to the Greater Northeast Houston Water and Wastewater Utilities. This system is also used to track SSOs and stoppages. All SSOs must be reported within 2 hours to 311. Notification of all SSO volumes greater than 2,500 gallons shall be given to Wastewater Operations Branch at the same time.

4.1.15 Service Agreement Close-out

At the end of the Service Agreement, all equipment will be fully operational in accordance with the manufacturer's equipment specifications. The Service Provider will substantiate that the Greater Northeast Houston Water and Wastewater Utilities and Facilities equipment meets those specifications.

Inventory levels will be replenished to the levels certified at service commencement. The Director will undertake a complete facility inspection and audit to establish the Greater Northeast Houston Water and Wastewater Utilities and Facilities condition prior to the completion of the Service Agreement. The minimum Service agreement close-out requirements of the Service Provider is provided below. The list is not all inclusive, but representative of the Department of Public Works and Engineering's standards.

In the event that the Service Provider fails to comply with these provisions, the Director may deduct the cost of repairs and/or grounds clean up from amounts due the Service Provider or from the Service Provider's performance bond.

4.1.16 Prior to the release of final payment to the Service Provider at the conclusion of the Service Term of the Service Agreement, certain items must be completed by the Service Provider and accepted by the Director. These items include the following:

1. Providing all equipment with proper barrier protection to prevent corrosion. This includes surface preparation according to the coating manufacturer recommendations.

2. Ensuring that all indicator lights are functional on control panels and equipment, and any alarm status indications are cleared.

3. Repairing any electrical maintenance deficiencies, including those items identified as a result of the annual third party testing program.

4. Completing all preventive maintenance work orders generated by the CMMS system, and bringing preventive maintenance activities current and up to date.

5. Capturing any open work orders on a punch list.

6. Ensuring all Operations and Maintenance and Vendor equipment manuals are appropriately filed and updated.

7. Reducing the sludge inventory in the sludge thickeners to less than one foot each, and reducing the inventory in the aeration basins and clarifiers to a negligible level.

8. Removing all site evidence of chemical spills and returning the area to original condition.

9. Ensuring that the grounds and housekeeping conditions under the Service Agreement are satisfied.

10. Documenting and updating the current status of the existing process control (SCADA) system.

11. Conducting a plant physical inventory in conjunction with the Director.

12. Providing documentation of the final chemical inventory.

13. Providing documentation of the final spare parts inventory.

14. Repairing any mechanical maintenance deficiencies, including those items identified as a result of vibration testing, oil analysis, or other documented means.

15. Returning out of service equipment prepared for long term storage to ready operational state.

16. Removing and disposing of all process residues, as a result of performing Service Agreement in an approved manner.

17. Resolve all outstanding contractual issues.

18. Calibrate all instrumentation and prepare written report of status.

4.1.17 Prepare monthly operating reports for the Greater Northeast Houston Service Area as specified herein. Submit two (2) electronic and 3 hard copies of the report to the Director by the tenth day of the month following the end of the reporting period unless instructed otherwise by the Director (delivery specified by the Director). Monthly operating reports shall be printed on 8-1/2 inch x 11-inch paper and shall be permanently bound with plastic front and back covers. Reports shall be divided into four sections separated by tabbed dividers. Information to be included in each section is summarized below.

4.1.17.1 Section 1 of the monthly operating report, “General,” shall include, at a minimum, the following information:

- Updated contact information, including mobile telephone or pager numbers, for the Service Provider’s project manager, the chief operator(s), vendor(s) listed in the emergency plan, and other key personnel.
- Monthly summary of M/WBE utilization (refer to sample chart in Exhibit 5).

4.1.17.2 Section 2 of the monthly operating report, “Drinking Water Operations,” shall include, at a minimum, the following information:

- Updated charts showing total water production for each water system by month for the current year and monthly production data for the preceding year(s) from the start of the Agreement as shown on the sample chart in Appendix R.
- Summary of minimum, maximum, and average pressures within the distribution systems for each day of the reporting period including, but not limited to, date, location, recorder serial number, and comments regarding possible impacts on system pressures.
- Charts for each water System showing daily water production from Harris and Montgomery County wells for the month as shown on the sample chart in Appendix S.
- Monthly summary of analytical results for microbial contaminants including the date and location of sample collection and the corresponding free chlorine residual measured at the same time and location as the bacteriological samples.
- Monthly summary of free chlorine residuals within the distribution systems including date and location of sample collection. Include the running annual average of free chlorine residuals within each distribution system.
- Monthly summary of dead-end main flushing during the month including address, date of flushing, and free chlorine residual following flushing (refer to sample table in Appendix Q).
- Monthly summary of analytical results for total phosphorus, condensed phosphate, fluoride, manganese, iron, color, and pH.

- Monthly summary of chemical deliveries to each water plant including date, type and quantity.
- Summary of major maintenance performed during the month including address, date, description and amount billed as Additional Services.
- Summary of charges for materials, equipment, and labor billed as Additional Services during the reporting period and cumulative for the year to date.
- Description of any damage to the water systems and possible causes thereof. If damages might be attributable to a third party, the Service Provider shall compile relevant information regarding the claim, and include such information in the monthly operating report. Damages must be reported to the Director or Service Provider shall be responsible for costs.
- Information regarding the regulatory compliance status of the water systems and description of any interaction or correspondence with regulatory authorities.
- Proposed monthly schedule for preventative maintenance and repairs to be billed as Additional Services.
- Additional matters within the scope of the Service Provider's work under the Agreement, which the Director may reasonably request.
- Summary of minimum, maximum, and average pressures within the distribution systems for each day of the reporting period including, but not limited to, date, location, recorder serial number, and comments regarding possible impacts on system pressures.
- Monthly summary of chemical deliveries, if any, including, but not limited to, granular activated carbon or other materials used for odor control.

4.1.17.3 Section 3 of the monthly operating report, "Wastewater Operations," shall include, at a minimum, the following information:

- Table listing rainfall and effluent flow data for each day of the month, including maximum daily flow, minimum daily flow, peak 2-hour flow rate, and ratio of average daily flow to permitted average flow for each wastewater treatment plant.

- Chart showing effluent flow for each WWTP with a separate chart showing rainfall for each day of the month.
- Charts showing wastewater characteristics at each treatment plant for each weekday during the recording period, including, but not limited to, the following parameters:
  - Influent CBOD,
  - Effluent CBOD,
  - Influent TSS,
  - Effluent TSS,
  - Influent NH_3-N,
  - Effluent NH_3-N,
  - Effluent pH,
  - Effluent DO,
  - Effluent free chlorine residual, and
  - Effluent fecal coliform (*E. coli*).
- Monthly summary of chemical deliveries to each WWTP including date, type, and quantity.
- Amount and type of solids disposed off-site at each WWTP including, but not limited to, sludge classification and dry weight or liquid volume with corresponding solids content.
- Summary of major maintenance performed during the month including address, date, description, and amount billed as Additional Services
- Summary of charges for materials, equipment, and labor billed as Additional Services during the reporting period and cumulative for the year to date.
- Description of any damage to the WWTPs and possible cause(s) thereof. If damages might be attributable to a third party, the Service Provider shall compile relevant information regarding the claim, and include such information in the monthly operating report.
- Information regarding the regulatory compliance status of the WWTPs and description of any interaction or correspondence with regulatory authorities.

- Proposed monthly schedule for preventative maintenance and repairs.
- Site layout of each WWTP with locations of proposed repairs clearly shown (refer to sample layouts in Appendices A-E).
- An estimate of the available capacity in each channel, basin, or digester listed in Section 4.3.11.
- Additional matters within the scope of the Service Provider's work under the Contract, which the Director may reasonably request.

4.1.17.4 Section 4 of the monthly operating report "Utility Maintenance" shall include, at a minimum, the following information:

- Total monthly service requests received
- Monthly wastewater repairs
- Monthly response time for water repairs
- Monthly response time for residences out of water
- Monthly fire hydrant repair
- Fire hydrant rehabilitation
- Fire hydrant preventative maintenance
- Monthly wastewater service transfers
- Monthly collection systems cleaned
- Monthly wastewater system stoppages service requests
- Monthly wastewater system stoppages service requests (public vs. private calls).
- Summary of all maintenance performed during the month including address, date, and description.
- Description of any damage to the distribution and collection systems and possible causes thereof. If damages might be attributable to a third party, the Service Provider

shall compile relevant information regarding the claim, and include such information in the monthly operating report.

4.1.18 Service Provider shall also submit an overall spreadsheet indicating the total cost of all service requests and work orders, with four cover spreadsheets indicating all service requests and work orders that have been completed for that month. The service requests and work orders shall indicate the service request and work order number, service description, response time, and the action taken for each service request and work order (i.e. closed, work order created, etc.). Three (3) hard copies shall be delivered to the Director. The spreadsheets shall be divided into the following sections:

Section I.	UMB Wastewater
Subsections:	Wastewater Service Requests and
	Wastewater Work Orders
Section II.	UMB Water
Subsections:	Water Service Requests and
	Water Work Orders

4.1.19 The Service Provider shall compile each section and subsection of the spreadsheets in the following manner:

1. Attach a copy of all service requests for UMB Wastewater and supporting documentation (i.e. invoices, receipts, materials list, hours worked, etc.).

2. Attach a copy of all work orders for UMB Wastewater and supporting documentation.

3. Attach a copy of all service requests for UMB Water and supporting documentation.

4. Attach a copy of all work orders for UMB Water and supporting documentation.

Each supporting document shall be stamped with the corresponding Service Request Tracking Number(s).

4.1.20 Meet with the Director at least monthly to review the monthly operating report, including the proposed monthly schedule for preventative and non-Emergency corrective maintenance and quality assurance. The Service Provider's project manager shall attend each monthly meeting. Meetings shall be held at a Department of Public Works and Engineering office, to be determined later, unless instructed otherwise by the Director. Prior to each meeting, the Greater Northeast Houston Service Area may be inspected by the Director.

4.1.21 Furnish and install two (2) computers, capable of interfacing with the existing SCADA system. Computer must meet the minimum standard set by the Director.

4.1.22 Maintain specified records of operations, maintenance, laboratory, personnel, safety, process control, inspections, alarms, and any other significant events.

4.1.23 Purchase and maintain an inventory of chemicals, fuels, parts, and supplies throughout the duration of the Contract Term. At a minimum, maintain a two-week supply of all treatment chemicals.

4.1.24 Furnish all lubricants, fuels, chemicals, and other items required to maintain equipment in accordance with specifications in the Contract and the equipment manufacturer's operation and maintenance manual.

4.1.25 Provide landscaping services for Greater Northeast Houston Service Area, including, but not limited to WWTP, lift stations, well sites, grounds and elevated storage tanks.

4.1.26 Compile and maintain a written schedule of all equipment contained within the Greater Northeast Houston Service Area, including, without limitation, model, serial number, and motor frame numbers. For each piece of equipment, the Service Provider shall compile and periodically update the following information:

- Equipment maintenance and/or recalibration recommended by the manufacturer, required by law, regulation, permit, or order, or otherwise determined by the Service Provider, in consultation with the Director, to be advisable, including detailed service procedures and oil or grease specifications.

4.1.27 Respond, on behalf of the Director, in a prompt and courteous manner to inquiries by City representatives, customers, regulatory authorities, City consultants, and other interested parties concerning the operation, maintenance, or repair of the Greater Northeast Houston Service Area Utilities and Facilities.

4.1.28 Assist inspectors, regulatory agency personnel, and City staff with any request that requires less than eight (8) man-hours as a Basic Service. However, in accordance with Section 4.2.14, assist City and/or regulatory agency personnel with sample collection associated with compliance monitoring for the water systems as required without limitation.

4.1.29 Dispose of all trash, rubbish, debris, and garbage in accordance with applicable laws, regulations and ordinances.

4.2 WATER SYSTEM OPERATIONS

4.2.1 The prospective Service Provider shall provide full-service management, operation, and maintenance in according with 30 TAC §290 to the following groundwater treatment plants and distribution systems:

PWS ID	Plant Name	Monthly Average Production (MGs/month)	Number of Permitted Wells	Number of Tanks and Type
Utility District 5 (1010348)	Kingwood – 1	75.0	5	GST (2) EST (1)
	Kingwood – 2	60.0	4	GST (2) EST (1)
	Kingwood – 3	77.7	3	GST (2) EST (1)
	Forest Cove - 2	0.05	2	GST (2) EST (1)
	Forest Cove - 3	23.0	1	GST (1)
	District 58	0.10	1	GST (1)
Belleau Woods (1011594)	Belleau Woods – 2	0.5	1	GST (2)
	Moonshine Hills	Re-pump Station		GST (1) HT (1)
District 73 (1011585)	District 73-1	10.0	1	GST (2)
	District 73-2	3.0	1	GST (2) EST (1)
District 82 (1011593)	District 82	0.00	1	SPT (2)
	Plantation Hills	1.5	2	GST (2)
Lake Houston (1011587)	Lake Houston – Deussen Park	0.5	1	HT (2)

4.2.2 The prospective Service Provider shall treat water to ensure or improve its water quality, maintain system pressures of at least 35 PSI throughout the distribution system under normal operating conditions (per 30 TAC §290.46), determine the adequacy of disinfection, collect daily chlorine residual and routine microbiological samples, and conduct chlorine residual and microbiological testing after repairs or installations of lines or appurtenances as required by 30 TAC §290.46(d), 30 TAC §290.110, or other applicable regulations.

4.2.3 To ensure compliance with pressure maintenance requirements, the Service Provider shall monitor distribution system pressure on a daily basis using 24-hour pressure recorders at locations approved by the Director.

4.2.3.1 Pressures shall be recorded within each water system in according with the minimum number of locations listed in the table below.

PWS ID	**Plant Name**	**Number of Pressure Monitoring Locations**
Utility District 5 (1010348)	Kingwood – 1, 2, and 3	3
	Forest Cove – 2 and 3	3
	District 58	3
Belleau Wood (1011594)	Belleau Wood – 2	1
	Moonshine Hills	1
District 73 (1011585)	District 73-1	1
	District 73-2	1
District 82 (1011593)	District 82	1
	Plantation Hills	1
Lake Houston (1011587)	Lake Houston – Deussen Park	0

4.2.3.2 The Service Provider shall furnish a minimum of two (2) 100-psi hydrant pressure recorders (Telog Model HPR-31 or approved equal) with data transfer cables, software, and adapters.

4.2.3.3 The Service Provider shall also furnish replacement recorders and related accessories for the duration of the Contract Term.

4.2.3.4 The Service Provider shall notify the Director immediately if the pressure in a water system falls below 35 PSI, no later than 12 hours after the occurrence.

4.2.4 The Service Provider shall furnish all laboratory facilities, apparatus, and supplies required to perform process control tests including, but not limited to, the following:

- Free chlorine residual
- Fecal coliform
- Total phosphorus
- Condensed phosphate
- Total cyanide
- Arsenic
- Fluoride
- Manganese
- Iron
- Color
- pH

4.2.5 The Service Provider shall measure the free chlorine residual at various locations with the water systems. Sample locations shall be subject to approval by the Director. Free chlorine residual shall be measured in the storage tanks and at the point where treated water enters the distribution

system using a colorimeter or spectrophotometer. Free chlorine residual within the distribution system shall be measured with a colorimeter, or spectrophotometer.

4.2.5.1 Measure the free chlorine residual at each point where treated water enters a distribution at least three (3) times per day.

4.2.5.2 Measure the free chlorine residual within each water system on a daily basis in accordance with the minimum number of locations listed in the table below.

PWS ID	**Plant Name**	**Number of Free Chlorine Monitoring Locations**
Utility District 5 (1010348)	Kingwood – 1, 2, and 3	3
	Forest Cover – 2 and 3	3
	District 58	3
Belleau Woods (1011594)	Belleau Woods – 2	1
	Moonshine Hills	1
District 73 (1011585)	District 73 - 1	1
	District 73 - 2	1
District 82 (1011593)	District 82	1
	Plantation Hills	1
Lake Houston (1011587)	Lake Houston – Deussen Park	0

4.2.5.3 Measure the free chlorine residual at the same points in the distribution system and at the same time as bacteriological samples are collected as specified in 30 TAC §290.109.

4.2.5.4 Free chlorine residual samples, which will be used to determine compliance with chlorine (MRDL) requirements in 30 TAC §290.110(b)(5), shall be analyzed by a TCEQ certified laboratory using acceptable analytical techniques specified in 30 TAC §290.119.

4.2.5.6 Other chlorine residual samples required by this section may be analyzed by a certified operator using approved techniques.

4.2.6 The Service Provider shall collect and analyze bacteriological samples at locations listed in the monitoring plan for each water system and analyze the samples for total coliform in according with applicable requirements of 30 TAC §290.109. Bacteriological sampling will be required at approximately 120 locations each month.

4.2.6.1 Repeat microbial sampling, if required under provisions of 30 TAC §290.109(c)(3), shall be performed by the Service Provider at no additional cost to the Director. Additional costs for repeat microbial monitoring shall be considered an Emergency Service and shall be paid as Additional Service. If required, the Service Provider shall prepare and implement a corrective action plan in accordance to the provisions of 30 TAC §290.116.

4.2.6.2 Analyses for fecal coliform or *Escherichia Coli* if required under provisions of 30 TAC §290.109(c)(5) shall be performed by Service Provider. Costs for fecal coliform or *Escherichia Coli* analyses shall be considered an Emergency Service and shall be paid as Additional Service.

4.2.6.3 Analytical procedures for microbial contaminants shall be performed in accordance with 30 TAC §290.119. Testing for microbial contaminants shall be performed at a laboratory certified by the Texas Department of State Health Services (TDSHS) Bureau of Laboratories or its successor agency.

4.2.6.4 The Service Provider shall notify the TCEQ and the Director immediately after it learns of an acute microbial (MCL) violation, but no later twelve (12) hours.

4.2.6.5 The Director shall provide boil water notifications to customers of affected water systems within 24-hours as required by 30 TAC §290.122 whenever an acute microbiological MCL violation occurs. When the boil water notification is no longer in effect, the Director shall notify affected customers in a similar manner.

4.2.7 The Service Provider shall monitor color at each point where potable water enters a distribution system on a daily basis using analytical techniques specified in 40 CFR §143.

4.2.8 The Service Provider shall monitor fluoride concentrations at each point where potable water enters a distribution system on a daily basis using analytical techniques specified in 40 CFR §141.

4.2.9 The Service Provider shall monitor pH levels at each point where potable water enters a distribution system on a daily basis using analytical techniques specified in 40 CFR §141, to ensure that pH levels do not fall below 7.0.

4.2.10 The Service Provider shall monitor total phosphorous, condensed phosphate or acid-hydrolyzable phosphorous at each point where polyphosphate addition occurs on a monthly basis using analytical techniques specified in 40 CFR §143 or the latest edition of "Standard Methods for the Examination of Water and Wastewater" (American Public Health Association, American Waterworks Association, and Water Pollution Control Federation).

4.2.11 The Service Provider shall monitor iron and manganese at each point where potable water enters a distribution system on a monthly basis using analytical techniques specified in 40 CFR §143 or the latest edition of "Standard Methods for the Examination of Water and Wastewater" (American Public Health Association, American Waterworks Association, and Water Pollution Control Federation).

4.2.12 The Service Provider shall monitor arsenic using Hach test strip, or approved equal, at each point where potable water enters a distribution system on a monthly basis.

4.2.13 The Service Provider shall monitor total cyanide where potable water enters a distribution system on a monthly basis.

4.2.14 The Service Provider shall assist City and/or regulatory agency personnel with sample collection associated with compliance monitoring for organic contaminants, inorganic contaminants, radiological contaminants, lead and copper, total trihalomethanes, haloacetic acids, and other contaminants.

4.2.15 Each month, the Service Provider shall submit a daily operating report for each water system to the Director. The daily operating report shall summarize information in the previous day's operating log. Additionally, the operating report shall include justification and a cost estimate for completion of any Emergency Service performed during the previous day. Daily operating reports shall be prepared in Word format and shall be submitted electronically or via facsimile. A hard copy shall be mailed to the Director.

4.2.16 The Service Provider shall prepare and submit the Quarterly Distribution Report for Public Water Systems, as specified in 30 TAC §290.110(e) for review and approved by the Director. The report shall be submitted to the Director by the fifth day of the month following the reporting period,

unless instructed otherwise by the Director. The service provider will correct any deficiencies identified by the Director.

4.2.17 The Service Provider shall file and maintain all logs, records, and reports required by the Contract and applicable regulations for duration of the Contract Term. Records must be made available, upon request, for review by the Director or regulatory authorities. At a minimum, the following records shall be retained:

- Chemical consumption data.
- Volume of water treated each day.
- Date, location, and nature of water quality, pressure, or outage complaints and the results of any subsequent complaint investigations.
- Dates that dead-end mains were flushed.
- Dates that storage tanks and other facilities were cleaned.
- Maintenance records for equipment and facilities.
- Copies of notices of violation and any resulting corrective actions.
- Copies of any public notice issued by the water system.
- Calibration records for laboratory equipment, flow meters, rate-of-flow controllers, and on-line disinfectant residual analyzers.
- Results of chemical and microbiological analyses.
- Copies of operating logs, daily operating reports, and monthly operating reports.
- Written reports, summaries, or communications relating to sanitary surveys of the systems.
- Logs of emergency power use and maintenance.

4.2.18 The Service Provider shall maintain and update the monitoring plans for the water systems as required by 30 TAC §290.121. The Service Provider shall also prepare, maintain, and/or update a Risk Management Plan for each water system as required by Clean Air Act and 40 CFR Part 68.

4.2.19 The Service Provider shall remove accumulated silt and deposits from each storage tank once every three years, not less than once during the Contract Term. Coordinate schedule for tank cleaning with the Director.

4.2.20 The Service Provider shall procure all materials, expendables, chemicals and other supplies required for the operation of the water system in accordance with the standards of the Contract. Cost for chemicals shall not be reimbursed.

4.2.21 The Service Provider shall respond to all water quality complaints related to the water system, such as complaints about taste, odor, or clarity problems, and submit a written description of the resolution to the Director within 24 hours.

4.2.22 During the contract term, the Service Provider shall perform any additional sampling and monitoring, if required, to comply with any changes made by federal, state, and local regulatory agency. The Director may provide a reporting template or templates for any new rule implementation.

4.3 WASTEWATER OPERATIONS

4.3.1 The Service Provider shall furnish a Class A certified wastewater treatment facility operator who will bear overall responsibility for operation and maintenance of the wastewater systems and sign all reports or certifications submitted to regulatory agencies. The Class A certified wastewater treatment facility operator, proposed by the Service Provider, shall be approved by the Director.

4.3.1.1 Each WWTP operator, except an operator-in-training, shall hold a valid certificate of competency as a wastewater treatment facility operator in accordance with 30 TAC §325.106. An operator-in-training must work under the guidance of a certified operator.

4.3.1.2 Each WWTP shall be operated on a daily basis by a certified chief operator or a certified operator holding a certificate of the same class or higher.

4.3.1.3 Certified chief operators, proposed by the Service Provider, shall be subject to approval by the Director.

4.3.1.4 When shift operation of the WWTP is necessary, each shift that does not have on-site supervision by the certified chief operator shall be supervised by an operator in responsible charge with a certification not less than one level below the chief operator. The licensed chief operator or operator holding the required level of license or higher shall be available by telephone or pager seven days-a-week.

4.3.2 The Service Provider shall collect and analyze samples at the frequency specified by permit

4.3.2.1 Analytical results including quality control data shall be reported monthly

4.3.2.2 Sample collection and analytical methods shall conform to requirements in the latest edition of "Standard Methods for the Examination of Water and Wastewater" (American Public Health Association, American Waterworks Association, and Water Pollution Control Federation), or the Environmental Protection Agency *manual entitled "Methods for Chemical Analysis of Water and Wastes" (EPA 600/4-79/020)*

4.3.3 At a minimum, the Service Provider shall perform the following process control testing at each WWTP at the specified frequency:

4.3.3.1 Dissolved oxygen shall be measured in each aeration basin five times per week using the membrane electrode method.

4.3.3.2 Mixed liquor suspended solids shall be measured in each aeration basin five times per week.

4.3.3.3 Sludge blanket shall be measured in each clarifier daily.

4.3.3.4 Settleable solids shall be measured daily.

4.3.4 The Service Provider shall procure any chemicals, materials, expendables, and other supplies required for the effective and efficient operation of the wastewater systems in accordance with the standards of the Agreement. Cost for chemicals shall not be reimbursed.

4.3.5 The Service Provider shall respond to all wastewater service complaints and submit a written description of the resolution to the Director within 36 hours. When a complaint involves the operation of one of the treatment plants, the monthly operating report containing up-to-date daily information, shall be transmitted to the Director electronically within 12 hours.

4.3.6 On the day after any Emergency service, the Service Provider shall electronically transmit a report to the Director that includes a justification and a cost estimate to complete the Emergency service started.

4.3.7 The Service Provider shall daily log operating information for each wastewater system on the monthly report. The monthly report shall include information for each day and a summary thereof. Monthly operating reports shall be prepared in a format compatible with Microsoft Word or Excel and shall be submitted electronically. A hard copy shall be mailed to the Director once a month.

4.3.8 The Service Provider shall be responsible for final disposal of sewage sludge, including all monitoring requirements, in conformance with 30 TAC §312, 40 CFR §503 and other applicable regulations, ordinances, and permits. Analytical results shall be reported to the Director. The Service Provider may dispose of the sludge in a land fill, by land application, or by means of the Bioset Process; however, the Service Provider shall comply with all applicable laws, regulations, ordinances, and permits.

4.3.8.1 The Service Provider shall prepare the annual report to the TCEQ and submit a draft report of the same to the Director for review and approval.

4.3.8.2 If the sewage sludge fails the Toxicity Characteristic Leaching Procedure, the Service Provider will pay the incremental cost for hazardous waste transportation and disposal, in excess of routine costs for nonhazardous waste transportation and land application, as an Additional Service.

4.3.9 The Service Provider shall annually certify that the wastewater solids have been processed and disposed according to 40 CFR Part §503 and/or 30 TAC §312 regulations, using the language therein. If the responsibility for solids processing and solids disposal is shared by two different organizations, both organizations shall certify compliance of the regulations according to their responsibilities. Detailed records of physical and chemical parameters and other data shall be filed and maintained as specified in Section 4.3.16.

4.3.9.1 Land application sites may contain several tracts, but biosolids from the City shall be applied only to tracts reserved for the exclusive use of the City.

4.3.9.2 Prior to land application of biosolids to a new contract site, soil from that site shall be analyzed for all the constituents regulated under the 40 CFR §503 in order to provide information on existing site conditions. Sampling and analysis procedures shall be submitted

to the Director for approval prior to sampling and analysis. The Service Provider shall pay for any soil analyses required.

4.3.10 The Service Provider may use equipment associated with the Bioset Process at its discretion in accordance with Section 4.3.8, following written notice to the Director. However, the Service Provider shall pay all expenses including, but not limited to, licensing fees, operation and maintenance costs, and disposal fees, required to process and dispose of the biosolids in conformance with 30 TAC §312, 40 CFR §503 and other applicable regulations, ordinances, and permits as specified in Section 4.3.11.

4.3.11 The Service Provider shall remove and dispose of all settled materials from lift stations, influent channels, aeration basins, digesters, and sludge channels, if practicable without disruption of wastewater services, whenever the available capacity of any individual unit is less than 90% of its total capacity.

4.3.11.1 The Service Provider shall clean all other process facilities/structures on a regular basis as necessary in order to meet the required performance standards.

4.3.11.2 All materials removed from process facilities shall be handled and disposed of in accordance with applicable federal, state, and local regulations.

4.3.12 DELIVERY TICKETS

4.3.12.1 The Service Provider must provide a five-part manifest signed by the operator at the plant of origination, the vehicle driver, and the signature and/or stamp of a responsible person at the final destination for all biosolids / solids hauled under this contract.

4.3.12.2 The five-part manifest shall be supplied by the Service Provider and shall comply with City of Houston Water and Sewer Code, Article XI (Transportation and Treatment of Certain Wastes), Division 8 (Manifest/Septic Tank Control Ticket Documents). Approval of the manifest and additional information may be obtained from the City Health Department, Environmental Health, Waste Transport Vehicle Permits (713/640-4399).

4.3.12.3 Loads requiring a five-part manifest include:

- Biosolids
- Sand and grit

- Dilute solids
- Loads also requiring a weigh ticket with tare and gross weights
- Sand and grit

4.3.12.4 THE CONTRACT ADMINISTRATOR MAY REQUIRE LOADS OF OTHER MATERIAL(S) TO HAVE WEIGH TICKETS AND/OR FIVE-PART MANIFESTS

4.3.13 Two cleanout operations per unit shall be included as Basic Services. Additional cleanout operations, if necessary, shall be considered Additional Services.

4.3.14 The Service Provider shall file and maintain all logs, records, and reports required by the Agreement and applicable regulations for the duration of the Agreement. Records shall be furnished to the Director upon request in hard copy and/or electronic format compatible with Microsoft Office software. At a minimum, the following records shall be retained:

- Chemical consumption data.
- Average daily flow and peak 2-hour flow, where applicable.
- Maintenance records for equipment and facilities.
- Logs of emergency power use and maintenance.
- Copies of notices of violation and any resulting corrective actions.
- Copies of operating logs, daily operating reports, and monthly operating reports.
- Analytical results for effluent CBOD, TSS, ammonia, pH, DO, and residual or fecal coliform.
- Calibration records for laboratory equipment, flow meters, rate-of-flow controllers, pH meters, temperature measuring devices, timers, on-line disinfectant residual analyzers, and other instruments used to measure data required to demonstrate compliance with applicable regulatory or permit requirements.
- Description as to how the Class A or Class B biosolids regulations were met and records of physical and chemical parameters demonstrating that biosolids were

processed in accordance with applicable regulations including analytical results, certifications, and operational records.

- Information related to sludge transportation (name, transporter registration number, manifest number, date and time, weight, etc.).

- Information related to sludge disposal (land application or landfill site owner, location, registration or permit number, etc.).

4.3.15 The Service Provider shall provide regular safety training for all employees as required by 30 TAC § 317.7.

4.3.16 The Service Provider shall test backflow prevention devices at the wastewater facilities annually in accordance with 30 TAC §317.4.

4.3.17 The Service Provider shall furnish laboratory apparatus required for routine process control and compliance monitoring.

4.3.18 The Service Provider shall provide a regular preventive maintenance schedule to the City of Houston Wastewater Operation for the Greater Northeast Houston Service Area Plants and Lift Stations equipment.

4.3.19 The Service Provider shall provide a detailed preventive maintenance report for each piece of equipment based on manufacturer recommendations or specific standards including the method and procedure.

4.3.20 The Service Provide shall provide a fully detailed technical report of repairs to the City of Houston Wastewater Operations. Anytime, the City's Wastewater Operation is being charged for repairs.

4.3.21 The Service Provider shall provide digital pictures with electronic files before and after any repairs that is being charged to the City.

4.3.22 The Service Provider shall provide the amount of liquid volume hauled with the corresponding per cent solids contents from Kingwood West, Forest Cove, Cedar Bayou, and/or West Lake Houston plants to Kingwood Central Wastewater Treatment Plant in a monthly report including the date and day of week.

4.3.23 The Service Provider shall provide a list of the subcontractors and supplier(s) as an attachment to the City of Houston that shall be approved by the Director. If future changes are required, subsequent approval shall again be obtained from The Director.

4.3.24 The Service Provider shall provide access to the Service Provider's Preventive Maintenance Reports so that Wastewater Operations can check Preventative and Maintenance schedules.

4.3.25 The Service Provider shall provide a list of all repairs in the monthly report.

4.4 UTILITY MAINTENANCE

4.4.1 At a minimum, the Service Provider shall assign one Class C or higher certified Chief Operator and one additional Class C or higher certified operator to supervise water distribution systems as required by 30 TAC §325.8(d). The certified Class C operators, proposed by the Service Provider, shall be subject to approval by the Director.

4.4.1.1 A certified groundwater treatment operator may perform all duties relating to the operation and maintenance of drinking water production and water distribution systems.

4.4.2 The Service Provider shall provide at least one operator for each wastewater collection system who holds a certificate of competency equal to or higher than the Class III Collections license. An operator-in-training must work in the presence of a certified operator.

4.4.3 The Service Provider shall be responsible for investigating all service requests, and otherwise handling administrative work associated with closing-out service requests, and contacting Central Operations Sections (COS) electronically for creation of a work order. All customer complaints shall be referred to 311 for creation of a service request. At least 90% of all service requests shall be investigated by the Service Provider within 24 hours of creation of the service request. Investigate is defined as inquiring into the subject of the service request by making contact with the customer through phone, face-to-face contact or by leaving a door hanger with the Service Provider's contact information. The Service Provider will be responsible for closing out work orders if approved by the city inspector. If no repair is required, the service request must be closed immediately. Each morning, the Service provider shall submit a daily route spreadsheet by e-mail to the Director, <u>no later than 7:00 am</u>. The daily route spreadsheet must list all crews, work orders, and service requests that are scheduled for that day.

4.4.4 The Director will provide the Service Provider with access to Information Management System (IMS) software. The Director will procure software license agreements as required to outfit as many computers as deemed necessary by the Service Provider. It is the Service Provider's responsibility to provide all computer hardware, and T1 or DSL connections, associated with utilizing the City's IMS software. The computers shall meet the minimum standard set by the Director.

4.4.5 The Service Provider shall be responsible for querying the IMS software as needed to identify new Service Requests.

4.4.6 A sample Fire Hydrant Inspection Form is included in Appendix M. Each fire hydrant inspection shall include opening and slowly closing of the hydrant to verify that it is operational. Also, each fire hydrant shall be visually inspected for any apparent leaks, defects, or damage. The inspection shall include taking at least two digital photographs with time and date stamp of the fire hydrant. One of the digital photographs with time and date stamp shall include an identifiable landmark in the background (if possible). The second digital photograph with time and date stamp shall be a close up of the fire hydrant. Additional photographs with time and date stamp shall be taken to show any apparent defects or damage.

4.4.6.1 The Service Provider shall replace or repair any hydrants found to be defective. The Service Provider shall not replace or repair any hydrants until the Director authorizes such work. All costs associated with fire hydrant repair or replacement shall be included in the original contract price, as stated in section 4.4.17 of this RFP

4.4.6.2 The Service Provider shall be responsible for conducting fire hydrant preventative maintenance (PM), in accordance with the Fire Hydrant Preventative Maintenance 11 Point Inspection form (Appendix M), PM shall include, exercising fire hydrant valves, pressure testing hydrants, flushing hydrants, greasing all nozzles, scraping/removing rust and paint, cutting and disposing of wild vegetation, and painting fire hydrants. PM may also include services such as installing reflectors in the street, Unique Feature Identification (UFID) labels, replacing caps/nozzle gaskets and chains, if needed.

4.4.6.3 A digital photograph with time and date stamp shall be taken of each fire hydrant after PM is complete. Photographs shall be submitted electronically to the Director on a monthly basis.

4.4.7 The Service Provider shall replace or repair any manhole found to be defective. The Service Provider shall not replace or repair any manholes until the Director has provided authorization. An effort shall be made by the Service Provider to unclog sewer lines that are downstream of manholes that are found to be surcharged. Unclogging sewer stoppages associated with manhole inspections will be included in the original contract price, as stated in section 4.4.17 of this RFP. Manholes originally found to be surcharged shall be re-inspected, at no extra cost to the City, once the downstream line is cleared and the water level recedes.

4.4.8 The Service Provider shall unclog sewer stoppages as needed to maintain adequate hydraulic performance of the sanitary sewer collection system. Unclogging sewer lines shall be attempted using hydraulic jetting equipment. The Service Provider may be required to jet sewer lines up to 180 setups or more per year. All costs associated with unclogging stoppages of sewer lines shall be included in the original contract price, as stated in section 4.4.17 of this RFP.

4.4.9 The Service Provider shall exercise all waterline valves 16 inches or above in GNEHSA once every 12 months, including valves located on buried water distribution lines (Appendix L).

4.4.9.1 For each waterline valve, exercising shall include fully closing and fully reopening (or vice versa) of each valve. If a valve is found to be non-operational, the Service Provider shall promptly notify the Director. Any valve defects shall be described in the Service Provider's monthly report. All costs associated with exercising waterline valves shall be included in the original contract price, as stated in section 4.4.17 of this RFP.

4.4.10 The Service Provider shall repair all broken, blocked, collapsed, or ruptured lines, mains, service lines in right-of ways or easements, valves, or other components of the Water Distribution System in accordance with the standards of this RFP.

4.4.11 The Service Provider shall repair all broken, blocked, collapsed, or ruptured lines, main lines, service lines in the right-of-ways, easements or other components of the Wastewater Collection System in accordance with the standards of this RFP.

4.4.12 The Service Provider will clean, using hydraulic jetting equipment, five hundred (500) feet upstream and downstream of any collection line repair when possible.

4.4.12.1 REPAIRS. The Service Provider shall repair/replace all broken, blocked, collapsed, or ruptured lines, main lines and service lines in easements, right-of-ways, or other components of the water distribution and wastewater collection systems within five (5)

days from the date the work order is created. The Service Provider is responsible for notifying all customers of pending repairs and water service interruptions. It is the Service Provider's sole responsibility to contact each resident or business that it reasonably is able to determine will be affected by such pending repairs and water service interruptions. This specifically includes water outages of any duration and limited access to streets, driveways, or sidewalks. Service Provider shall attempt to speak with each such resident or business, and having tried and failed shall place a door hanger to convey the duration of service or other interruption. Door hangers shall list the telephone numbers of the Service Provider and field superintendent. The Service Provider is responsible for supplying such materials needed to properly notify residents.

4.4.12.2 RESTORATION. Concrete and site/yard work shall be completed within five (5) days after the repairs are completed. The City will not pay for a work order until all of the work is complete, including restoration. The City will take digital photographs and walk through with the Service Provider if necessary, before considering a work order complete. Work orders shall always be scheduled with the older dated work orders first.

4.4.12.3 "FIRST COME FIRST GO": shall be the order of completions of work. However, the Director may require certain work order(s) to take priority in emergency situations. If any work is not completed as described above, the Service Provider may be required to state reasons for the delays in the Daily Schedule beginning the 11th day from the date the work was issued. The Service Provider shall make "special effort" to complete as many work orders as possible by the 28th of the month. All work completed by the end of the month shall be paid that month. However, the City doesn't guarantee payment in that month if the last days of the month are weekends.

4.4.12.4 NON PERFORMANCE. If Service Provider does not complete repair or restoration within the specified time referenced in 4.4.12, then the Director may, at his discretion, impose liquidated damages in the amount of $ 250.00 per day for each occurrence.

4.4.13 The Service Provider shall repair water lines and sanitary sewer lines in accordance with applicable sections of the “City of Houston's Utility Maintenance Field Policy Manual” (refer to Appendix O - City of Houston, Sections of Utility Maintenance - Field Policy Manual).

4.4.14 The Service Provider shall photograph and document site conditions before proceeding with any pavement cutting and/or excavating. At least two digital photographs, with time and date stamp, of the open excavation shall be taken. A digital photograph, with time and date stamp, shall be taken once the repair has been made and the line has been backfilled up to the spring-line of the pipe. If a pavement repair is required, a digital photograph, with time and date stamp, shall be taken that shows bedding and reinforcement-steel (complete and in-place) before concrete is placed. A final digital photograph shall be taken once the repair has been made and cleanup work is complete.

4.4.15 The Service Provider shall procure all materials, expendables, chemicals, and other supplies required for the operation of the distribution and collection lines in accordance with the most current City of Houston Public Works & Engineering Approved Products List.

4.4.16 If required by Work Order, the Service Provider shall analyze samples and provide tests, reports, or studies in connection with the operation, maintenance, and repair of the distribution and collection lines.

4.4.17 COST

4.4.17.1 Basic Services-All work described in section 4.4 UTILITY MAINTENANCE and any associated work concerning Utility Maintenance is based on the *Basic Services Worksheet for Utility Maintenance (*chart below*)*. Basic Services or “routine maintenance” includes all services listed on the attached worksheet. Basic Services shall also include the cost for repairs, replacements, preventative maintenance, labor, materials, tools, machinery, and all other costs associated with the operation and maintenance of the Greater Northeast Houston Service Area Water and Wastewater System Facilities. The Service Provider shall use the attached worksheet to determine the projected costs based on a three (3) year estimate, with two one-year options. The projected costs for years four (4) and five (5) will be based on the *Projected Number of Work Orders (annually)*. The Service Provider will be responsible for recording such costs on the Pricing Template found in section 3, *Price Proposal Form*.

The Service Provider shall complete the stated projected number of work orders (based on 36 months) by the completion of the three (3) year contract term. In the event the Service Provider does not meet such requirements at the completion of the three (3) year contract duration, the Service Provider shall refund the City for the cost of services not rendered. The refund will be based on the difference between the projected cost total for 36 months and the actual cost for the work orders performed. The actual cost will be based on the cost provided on the attached *Basic Services Worksheet for Utility Maintenance.*

The Service Provider is not entitled to additional payment for materials, supplies, labor, engineering testing, tools, machinery or any other expenditures incidental to the satisfactory completion of the work described under section 4.4. Additionally, the Director, at his discretion, may carry out work for any repairs/replacements of any components of water distribution and wastewater collection systems, labor, equipment, and/or materials and any purchases of equipment materials or supplies with no due compensation to the Service Provider under this contract.

SERVICE DESCRIPTION*	Projected # of Work Orders (Annually) **	Projected # of Work Orders (Based on 36 months)	Annual Projected Cost	Projected Cost Total (Based on 36 months)	Projected Cost-yr 4	Projected Cost-yr 5
WATER DISTRIBUTION SYSTEMS SERVICES:						
Main Water Line / Service Line Repairs, Cut & Plugs:						
3/4" to 2" line	131	393				
4" line	5	15				
6" line	28	84				
8" line	12	36				
10" line	6	18				
12" line	3	9				
Repair Gate Valves	10	30				
Fire Hydrant (FH) Repairs	56	168				
FH Replacements	50	150				
FH Preventative Maintenance, Clean valve stacks, Raise meter boxes, Raise/lower valve stacks	138	414				
Exercise Valves	160	480				
Investigations: service leaks, meter leaks, out of water calls, missing valve covers, valve leaks, low pressure, high pressure, major main breaks, minor main breaks, meter lid replacement, fire hydrant leaks, main breaks, raise/lower meters to grade, exposed service line, damaged service line, leaning, down, missing fire hydrants, fire hydrant-no water, fire hydrant-open, water quality (wq) bad taste/air in lines/chlorine adjustment/oily water/colored water/particles in water/odor/sickness, Replace meter box	1500	4500				
Operate Valves/Cut off Valves	70	210				
WASTEWATER COLLECTION SYSTEMS SERVICES:						
Main Line Repairs:						
4" line	10	30				
6" line	10	30				
8" line	2	6				
10" line	2	6				
12" line	2	6				
15" line	2	6				
Manhole Repairs	8	24				
Force Main Repairs	1	3				
Service Line Repairs	45	135				
T.V. Lines, Jet Lines, Restoration/Repairs, Clean Main/Install Cleanouts, Unclog Sewer Stoppages	151	453				
Excursions	30	90				
stoppages, missing manholes, clogged services, install in-flow, connections, Trace service lateral	427	1281				
Clear Debris, Manholes	12	36				
Raise Manholes to Grade, Reseal, Replace Covers	12	36				
		TOTAL				
Service Provider Completes						

*Refer to Appendix N- *City of Houston, Sections of Utility Maintenance- Field Policy Manual* for service description details.

** A Work Order is defined as an order to perform a specific service that requires more than twenty (20) minutes to complete.

Curbs, sidewalks, driveways, streets, fences, landscape or any other infrastructure disturbed while performing the work required under this RFP must be restored to the original condition or to the latest City of Houston construction specifications, whichever is more stringent. Such repairs/replacements shall be considered incidental to said work. The Service Provider shall not be entitled to additional compensation for such repairs/replacements.

4.4.17.2 Additional Services-No additional services fees will be applied to work performed under section 4.4 UTILITY MAINTENANCE

4.5 SECURITY REQUIREMENTS

The Service Provider agrees to strictly abide by all security regulations issued by the Director as stated below.

4.5.1 Resident Service Providers and Subcontractors: Resident Service Providers and their subs are defined as permanent Service Provider and subcontractor employees requiring access to PUD sites for more than 60 days.

4.5.2 All Resident Service Provider and subcontractor employees shall adhere to the following:

- Shall provide proof of U.S. Citizenship or work permit such as a Birth Certificate or Resident Alien Card and etc. upon request.
- Submit a “Consent to Release Information” form for their criminal background check.
- Submit a “Badge Request Form” to receive their COH contractor badge.
- Shall provide any other documentation necessary to complete criminal background checks if requested.
- Shall display their COH contractor badge at the entrance gate or when asked by security and/or a COH employee, and shall have their COH contractor badge displayed free of obstruction while on COH property.
- Shall have their valid driver’s license or state issued I.D. in their possession at all times.
- The Service Provider company and the employee will be held responsible for returning all COH contractor badges upon completion of project or termination of employment.
- The COH may file criminal and/or civil charges for failure to return government property.

4.5.3 Non-Resident Service Providers and Subcontractors: Non-resident Service Providers and subcontractors are defined as contactor and subcontractor employees (to include all individuals needing access to perform a service/work) requiring access to PUD sites for less than 60 days.

4.5.4 All Non-Resident Service Provider and subcontractor employees shall adhere to the following:

4.5.5 General Conditions:

4.5.5.1 It is the responsibility of the Service Provider and Subcontractor to immediately notify the PWE Security Section of any personnel changes.

4.5.5.2 The COH/PWE Security Group will conduct a criminal background check (at no cost to the Service Provider) on all Service Provider and subcontractor employees assigned to work a PUD site. The Service Provider shall contact the PWE Security Section during normal business hours (8:00 am to 5:00 pm, M-F) to coordinate completion of criminal background checks.

"All badge processing shall be scheduled ahead of time with Shandra Jones."

Thomas Collins, Security Manager - (713) 501-6475; Thomas.collins@cityofhouston.net

Carlos Martinez, Sr. Public Loss Investigator - (713) 504-7288; carlos.martinez3@cityofhouston.net

Jerry Zahn, Sr. Public Loss Investigator - (713) 297-1418; jerry.zahn2@cityofhouston.net

Shandra Jones, Security Leader - (713) 560-9826; shandra.jones@cityofhouston.net

Jason Salas, Security Leader - (713) 689-9029; Jason.salas@cityofhouston.net

Derek Harrison, Security Leader - (713) 416-0053; derek.harrison@cityofhouston.net

4.5.5.3 The Service Provider shall agree to completion of the City's Disclosure and Consent for Release of Information and any other documentation necessary to complete criminal background checks.

4.5.5.4 The COH photo identification office is located at 611 Walker Street in Houston, Texas on the 3rd floor of the annex (713-837-7593 phone 713-837-0735 fax). Identification cards / access badges will only be issued by the City once a background check has been

completed for the Service Provider or subcontractor employee, and clearance has been granted by the Director.

PHOTO ID OFFICE HOURS:

Mon. & Wed.	8 am to 12 noon
Tues. & Thurs.	12 noon to 4 pm
Fri.	Closed

Lost cards are disabled and replacement cost is $50.00

4.5.5.5 Construction and/or Contract Management are responsible for providing security a weekly updated list of all employees (Service Providers and subs).

4.5.5.6 All General Service Providers/Sub Contractors and their employees will be held accountable for the return of ALL City issued badges of their employees and sub contractor employees. Criminal charges may be filed in an effort to recover the outstanding badges.

4.5.6 Service Provider and Subcontractor Vehicles:

- All personal and company vehicles are required to have the Company's Logos at all times while on COH property.
- The Company Logos shall not be smaller than 12" x 12" placed on the driver and passenger side doors.
- All vehicles shall have the owner's/operator's name, phone number, and company name displayed on the dashboard for identification purposes during emergencies.

4.5.7 Enforcement:

- No Service Provider or Subcontractor employee will be allowed to enter the facility without having a COH contractor badge or company issued badge along with a valid state issued I.D. or driver's license.
- Any Service Provider or Subcontractor employee found on any COH/ PUD site without proper identification will be immediately escorted off the property.
- In addition, construction management will issue a non-compliance letter to the Service Provider responsible.

- Furthermore, the Director will not allow contract employees conditional access pending the arrival of requested badges.
- If an employee does not have proper identification, he/she will not be allowed to report to duty at any PUD site.

APPENDICES

APPENDIX A

DISCHARGE PERMIT AND PROCESS DIAGRAM

KINGWOOD CENTRAL WWTP

KW Central WWTP

Kathleen Hartnett White, *Chairman*
Larry R. Soward, *Commissioner*
H. S. Buddy Garcia, *Commissioner*
Glenn Shankle, *Executive Director*

TEXAS COMMISSION ON ENVIRONMENTAL QUALITY

Protecting Texas by Reducing and Preventing Pollution

September 11, 2007

Mr. Roger B. Whitney, P.E.
City of Houston
c/o Department of Public Works and Engineering
4545 Groveway Drive
Houston, Texas 77087

Re: City of Houston, TPDES Permit No. WQ0010495146
(RN 101613487; CN 600128995)

Dear Mr. Whitney:

Enclosed is a copy of the above referenced permit for a wastewater treatment facility issued on behalf of the Executive Director pursuant to Chapter 26 of the Texas Water Code.

If you are receiving a Texas Pollutant Discharge Elimination System (TPDES) discharge permit and your system is a new facility or an existing facility that has been reporting to the Texas Commission on Environmental Quality (TCEQ), you may comply with self-reporting requirements by submitting discharge monitoring reports (DMR) electronically over the Web through STEERS (see enclosed flyer). Information about the electronic DMR (eDMR) system is available at www.tceq.state.tx.us/goto/eDMR. We encourage electronic reporting. Discharge facilities that do not use the eDMR system will receive paper DMR forms and instructions from the TCEQ Enforcement Division, or from the U.S. Environmental Protection Agency (EPA) if the facility has been submitting DMRs to EPA.

If you are receiving a land application (no discharge) permit and are required to report monitoring results, self-reporting forms and instructions will be forwarded to you by the TCEQ Enforcement Division.

Enclosed is a "Notification of Completion of Wastewater Treatment Facilities" form. Use this form when the facility begins to operate or goes into a new phase. The form notifies the agency when the proposed facility is completed or when it is placed in operation. This notification complies with the special provision incorporated into the permit. When the agency receives this form, the appropriate permit requirements will be activated in the compliance system database so that accurate monitoring and reporting can occur.

Printed on recycled paper using soy based ink

Should you have any questions, please contact Mr. Phillip B. Urbany of the TCEQ's Wastewater Permitting Section at (512) 239-4671 or if by correspondence, include MC 148 in the letterhead address at the bottom of the previous page.

Sincerely,

L'Oreal W. Stepney, P.E., Director
Water Quality Division
Texas Commission on Environmental Quality

LWS/PBU/sp

Enclosures

ccs: TCEQ, Region 12
Mr. Robert McCarty, P.E., PBS&J, 6504 Bridge Point Parkway, Austin, Texas 78730

Kathleen Hartnett White, *Chairman*
Larry R. Soward, *Commissioner*
H. S. Buddy Garcia, *Commissioner*
Glenn Shankle, *Executive Director*

TEXAS COMMISSION ON ENVIRONMENTAL QUALITY

Protecting Texas by Reducing and Preventing Pollution

September 11, 2007

Roger B. Whitney, P.E.
City of Houston
c/o Department of Public Works and Engineering
4545 Groveway Drive
Houston, Texas 77087-1122

RE: City of Houston
Permit No. WQ0010495146

This letter is your notice that the Texas Commission on Environmental Quality (TCEQ) executive director has issued final approval of the above-named application.

You may file a **motion to overturn** with the chief clerk. A motion to overturn is a request for the commission to review the TCEQ executive director's approval of the application. Any motion must explain why the commission should review the TCEQ executive director's action.

A motion to overturn must be received by the chief clerk within 23 days after the date of this letter. An original and 11 copies of a motion must be filed with the chief clerk in person or by mail. The Chief Clerk's mailing address is Office of the Chief Clerk (MC 105), TCEQ, P.O. Box 13087, Austin, Texas 78711-3087. On the same day the motion is transmitted to the chief clerk, please provide copies to Robert Martinez, Director of the Environmental Law Division (MC 173), and Blas Coy, Public Interest Counsel (MC 103), both at the same TCEQ address listed above. If a motion is not acted on by the commission within 45 days after the date of this letter, then the motion shall be deemed overruled.

Individual members of the public may seek further information by calling the TCEQ Office of Public Assistance, toll free, at 1-800-687-4040.

Sincerely,

LaDonna Castañuela
Chief Clerk

LDC/lg

cc: Blas Coy, TCEQ Public Interest Counsel (MC 103)

Notification of Completion of Wastewater Treatment Facility

If you have questions about completing this form or about the Water Quality Permit program, please contact the Water Quality Applications Team at 512/239-5161.

Permit Information

TCEQ Water Quality Permit No.: _____ EPA I.D. No.: TX _____

Facility Information

Permitted Flow (MGD): _____ Phase of Operation (*check one*): ☐ Interim ☐ Final

Estimated or Actual Date of Operation (Month/Day/Year): _____

Operator Information

Name: _____

Class of Operator Certification: ____ Operator Certification Number: _____

Employed By: _____

Responsible Official

Name: _____ Title: _____

Phone Number: _____ Fax Number: _____

Mailing Address: _____

_____

Signature: _____ Date: _____

This form should be completed when a facility is placed operational or goes into a new phase of operation. The completed form should be returned at least 45 days before you plan to bring the facility on line.

Mail completed form to: Texas Commission on Environmental Quality
Permits Administrative Review Section
Water Quality Applications Team (MC-161)
PO Box 13087
Austin TX 78711-3087

OR fax to 512/239-0884 "ATTENTION: WATER QUALITY APPLICATIONS TEAM"

ICW Central WWTP

TPDES PERMIT NO. WQ0010495146
[For TCEQ Office Use Only:
EPA ID No. TX0066583]

TEXAS COMMISSION ON ENVIRONMENTAL QUALITY
P.O. Box 13087
Austin, Texas 78711-3087

This amendment supersedes and replaces TPDES Permit No. WQ0010495146 issued May 27, 2004.

PERMIT TO DISCHARGE WASTES
under provisions of
Section 402 of the Clean Water Act
and Chapter 26 of the Texas Water Code

City of Houston

whose mailing address is

Department of Public Works & Engineering
4545 Groveway Drive
Houston, Texas 77087

is authorized to treat and discharge wastes from the Kingwood Central Wastewater Treatment Facility, SIC Code 4952

located north of the West Fork Arm of Lake Houston, approximately 4.5 miles east of U.S. Highway 59 between Bear Branch and Bens Branch, approximately 7.75 miles northeast of the intersection of U.S. Highway 59 and Farm-to-Market Road 1960 in Harris County, Texas

to Ben's Branch; thence to Lake Houston in Segment No. 1002 of the San Jacinto River Basin

only according with effluent limitations, monitoring requirements and other conditions set forth in this permit, as well as the rules of the Texas Commission on Environmental Quality (TCEQ), the laws of the State of Texas, and other orders of the TCEQ. The issuance of this permit does not grant to the permittee the right to use private or public property for conveyance of wastewater along the discharge route described in this permit. This includes, but is not limited to, property belonging to any individual, partnership, corporation or other entity. Neither does this permit authorize any invasion of personal rights nor any violation of federal, state, or local laws or regulations. It is the responsibility of the permittee to acquire property rights as may be necessary to use the discharge route.

This permit shall expire at midnight, **July 1, 2010.**

ISSUED DATE: AUG 31 2007

For the Commission

INTERIM I EFFLUENT LIMITATIONS AND MONITORING REQUIREMENTS Outfall Number 001

1. During the period beginning upon the date of issuance and lasting through the completion of the expansion of the 7.0 million gallons per day (MGD) treatment facilities, the permittee is authorized to discharge subject to the following effluent limitations: The annual average flow of effluent shall not exceed 6.6 MGD; nor shall the average discharge during any two-hour period (2-hour peak) exceed 12,292 gallons per minute (gpm).

Effluent Characteristic	Discharge Limitations				Minimum Self-Monitoring Requirements	
	Daily Avg mg/l(lbs/day)	7-day Avg mg/l	Daily Max mg/l	Single Grab mg/l	Report Daily Avg. & Daily Max. Measurement Frequency	Sample Type
Flow, MGD	Report	N/A	Report	N/A	Continuous	Totalizing meter
Carbonaceous Biochemical Oxygen Demand (5-day)	5 (275)	10	20	30	Five/week	Composite
Total Suspended Solids	10 (550)	20	40	60	Five/week	Composite
Ammonia Nitrogen	3 (165)	5	7	15	Five/week	Composite
Fecal Coliform Bacteria, colonies per 100 ml	200	400 (*)	N/A	800	Daily	Grab

(*) The 7-day average shall be reported in place of the Daily Max.

2. The permittee shall utilize an Ultraviolet Light (UV) system for disinfection purposes. An equivalent method of disinfection may be substituted only with prior approval of the Executive Director.

3. The pH shall not be less than 6.0 standard units nor greater than 9.0 standard units and shall be monitored five times per week by grab sample.

4. There shall be no discharge of floating solids or visible foam in other than trace amounts and no discharge of visible oil.

5. Effluent monitoring samples shall be taken at the following location(s): Following the final treatment unit.

6. The effluent shall contain a minimum dissolved oxygen of 6.0 mg/l and shall be monitored five times per week by grab sample.

7. The annual average flow and maximum 2-hour peak flow shall be reported monthly.

INTERIM II EFFLUENT LIMITATIONS AND MONITORING REQUIREMENTS

Outfall Number 001

1. During the period beginning upon the completion of the expansion of the 7.0 million gallons per day (MGD) treatment facilities and lasting through the completion of the expansion of the 9.4 MGD treatment facilities, the permittee is authorized to discharge subject to the following effluent limitations: The annual average flow of effluent shall not exceed 7.0 MGD; nor shall the average discharge during any two-hour period (2-hour peak) exceed 25,678 gallons per minute (gpm).

Effluent Characteristic	Discharge Limitations				Minimum Self-Monitoring Requirements	
	Daily Avg mg/l(lbs/day)	7-day Avg mg/l	Daily Max mg/l	Single Grab mg/l	Report Daily Avg. & Daily Max. Measurement Frequency	Sample Type
Flow, MGD	Report	N/A	Report	N/A	Continuous	Totalizing meter
Carbonaceous Biochemical Oxygen Demand (5-day)	5 (292)	10	20	30	Five/week	Composite
Total Suspended Solids	10 (584)	20	40	60	Five/week	Composite
Ammonia Nitrogen	3 (175)	5	7	15	Five/week	Composite
Fecal Coliform Bacteria, colonies per 100 ml	200	400 (*)	N/A	800	Daily	Grab

(*) The 7-day average shall be reported in place of the Daily Max.

2. The permittee shall utilize an Ultraviolet Light (UV) system for disinfection purposes. An equivalent method of disinfection may be substituted only with prior approval of the Executive Director.

3. The pH shall not be less than 6.0 standard units nor greater than 9.0 standard units and shall be monitored five times per week by grab sample.

4. There shall be no discharge of floating solids or visible foam in other than trace amounts and no discharge of visible oil.

5. Effluent monitoring samples shall be taken at the following location(s): Following the final treatment unit.

6. The effluent shall contain a minimum dissolved oxygen of 6.0 mg/l and shall be monitored five times per week by grab sample.

7. The annual average flow and maximum 2-hour peak flow shall be reported monthly.

FINAL EFFLUENT LIMITATIONS AND MONITORING REQUIREMENTS

Outfall Number 001

1. During the period beginning upon the completion of the expansion of the 9.4 million gallon per day (MGD) treatment facilities and lasting through the date of expiration, the permittee is authorized to discharge subject to the following effluent limitations: The annual average flow of effluent shall not exceed 9.4 MGD; nor shall the average discharge during any two-hour period (2-hour peak) exceed 38,309 gallons per minute (gpm).

Effluent Characteristic	Discharge Limitations				Minimum Self-Monitoring Requirements	
	Daily Avg mg/l(lbs/day)	7-day Avg mg/l	Daily Max mg/l	Single Grab mg/l	Report Daily Avg. & Daily Max. Measurement Frequency	Sample Type
Flow, MGD	Report	N/A	Report	N/A	Continuous	Totalizing meter
Carbonaceous Biochemical Oxygen Demand (5-day)	5 (392)	10	20	30	Five/week	Composite
Total Suspended Solids	10 (784)	20	40	60	Five/week	Composite
Ammonia Nitrogen	3 (235)	5	7	15	Five/week	Composite
Fecal Coliform Bacteria, colonies per 100 ml	200	400 (*)	N/A	800	Daily	Grab

(*) The 7-day average shall be reported in place of the Daily Max.

2. The permittee shall utilize an Ultraviolet Light (UV) system for disinfection purposes. An equivalent method of disinfection may be substituted only with prior approval of the Executive Director.

3. The pH shall not be less than 6.0 standard units nor greater than 9.0 standard units and shall be monitored five times per week by grab sample.

4. There shall be no discharge of floating solids or visible foam in other than trace amounts and no discharge of visible oil.

5. Effluent monitoring samples shall be taken at the following location(s): Following the final treatment unit.

6. The effluent shall contain a minimum dissolved oxygen of 6.0 mg/l and shall be monitored five times per week by grab sample.

7. The annual average flow and maximum 2-hour peak flow shall be reported monthly.

DEFINITIONS AND STANDARD PERMIT CONDITIONS

As required by Title 30 Texas Administrative Code (TAC) Chapter 305, certain regulations appear as standard conditions in waste discharge permits. 30 TAC §§ 305.121 - 305.129 (relating to Permit Characteristics and Conditions) as promulgated under the Texas Water Code §§ 5.103 and 5.105, and the Texas Health and Safety Code §§ 361.017 and 361.024(a), establish the characteristics and standards for waste discharge permits, including sewage sludge, and those sections of 40 Code of Federal Regulations (CFR) Part 122 adopted by reference by the Commission. The following text includes these conditions and incorporates them into this permit. All definitions in Section 26.001 of the Texas Water Code and 30 TAC Chapter 305 shall apply to this permit and are incorporated by reference. Some specific definitions of words or phrases used in this permit are as follows:

1. Flow Measurements

   a. Annual average flow - the arithmetic average of all daily flow determinations taken within the preceding 12 consecutive calendar months. The annual average flow determination shall consist of daily flow volume determinations made by a totalizing meter, charted on a chart recorder and limited to major domestic wastewater discharge facilities with a 1 million gallons per day or greater permitted flow.

   b. Daily average flow - the arithmetic average of all determinations of the daily flow within a period of one calendar month. The daily average flow determination shall consist of determinations made on at least four separate days. If instantaneous measurements are used to determine the daily flow, the determination shall be the arithmetic average of all instantaneous measurements taken during that month. Daily average flow determination for intermittent discharges shall consist of a minimum of three flow determinations on days of discharge.

   c. Daily maximum flow - the highest total flow for any 24-hour period in a calendar month.

   d. Instantaneous flow - the measured flow during the minimum time required to interpret the flow measuring device.

   e. 2-hour peak flow (domestic wastewater treatment plants) - the maximum flow sustained for a two-hour period during the period of daily discharge. The average of multiple measurements of instantaneous maximum flow within a two-hour period may be used to calculate the 2-hour peak flow.

   f. Maximum 2-hour peak flow (domestic wastewater treatment plants) - the highest 2-hour peak flow for any 24-hour period in a calender month.

2. Concentration Measurements

   a. Daily average concentration - the arithmetic average of all effluent samples, composite or grab as required by this permit, within a period of one calendar month, consisting of at least four separate representative measurements.

      i. For domestic wastewater treatment plants - When four samples are not available in a calendar month, the arithmetic average (weighted by flow) of all values in the previous four consecutive month period consisting of at least four measurements shall be utilized as the daily average concentration.

      ii. For all other wastewater treatment plants - When four samples are not available in a calender month, the arithmetic average (weighted by flow) of all values taken during the month shall be utilized as the daily average concentration.

   b. 7-day average concentration - the arithmetic average of all effluent samples, composite or grab as required by this permit, within a period of one calendar week, Sunday through Saturday.

   c. Daily maximum concentration - the maximum concentration measured on a single day, by the sample type specified in the permit, within a period of one calender month.

   d. Daily discharge - the discharge of a pollutant measured during a calendar day or any 24-hour period that reasonably represents the calendar day for purposes of sampling. For pollutants with limitations expressed in terms of mass, the "daily discharge" is calculated as the total mass of the pollutant discharged over the sampling day. For pollutants with limitations expressed in other units of measurement, the "daily discharge" is calculated as the average measurement of the pollutant over the sampling day.

      The "daily discharge" determination of concentration made using a composite sample shall be the concentration of the composite sample. When grab samples are used, the "daily discharge" determination of concentration shall be the arithmetic average (weighted by flow value) of all samples collected during that day.

e. Fecal coliform bacteria concentration - the number of colonies of fecal coliform bacteria per 100 milliliters effluent. The daily average fecal coliform bacteria concentration is a geometric mean of the values for the effluent samples collected in a calendar month. The geometric mean shall be determined by calculating the nth root of the product of all measurements made in a calender month, where n equals the number of measurements made; or, computed as the antilogarithm of the arithmetic mean of the logarithms of all measurements made in a calender month. For any measurement of fecal coliform bacteria equaling zero, a substituted value of one shall be made for input into either computation method. The 7-day average for fecal coliform bacteria is the geometric mean of the values for all effluent samples collected during a calender week.

f. Daily average loading (lbs/day) - the arithmetic average of all daily discharge loading calculations during a period of one calender month. These calculations must be made for each day of the month that a parameter is analyzed. The daily discharge, in terms of mass (lbs/day), is calculated as (Flow, MGD x Concentration, mg/l x 8.34).

g. Daily maximum loading (lbs/day) - the highest daily discharge, in terms of mass (lbs/day), within a period of one calender month.

3. Sample Type

a. Composite sample - For domestic wastewater, a composite sample is a sample made up of a minimum of three effluent portions collected in a continuous 24-hour period or during the period of daily discharge if less than 24 hours, and combined in volumes proportional to flow, and collected at the intervals required by 30 TAC § 319.9 (a). For industrial wastewater, a composite sample is a sample made up of a minimum of three effluent portions collected in a continuous 24-hour period or during the period of daily discharge if less than 24 hours, and combined in volumes proportional to flow, and collected at the intervals required by 30 TAC § 319.9 (b).

b. Grab sample - an individual sample collected in less than 15 minutes.

4. Treatment Facility (facility) - wastewater facilities used in the conveyance, storage, treatment, recycling, reclamation and/or disposal of domestic sewage, industrial wastes, agricultural wastes, recreational wastes, or other wastes including sludge handling or disposal facilities under the jurisdiction of the Commission.

5. The term "sewage sludge" is defined as solid, semi-solid, or liquid residue generated during the treatment of domestic sewage in 30 TAC Chapter 312. This includes the solids which have not been classified as hazardous waste separated from wastewater by unit processes .

6. Bypass - the intentional diversion of a waste stream from any portion of a treatment facility.

MONITORING AND REPORTING REQUIREMENTS

1. Self-Reporting

Monitoring results shall be provided at the intervals specified in the permit. Unless otherwise specified in this permit or otherwise ordered by the Commission, the permittee shall conduct effluent sampling and reporting in accordance with 30 TAC §§ 319.4 - 319.12. Unless otherwise specified, a monthly effluent report shall be submitted each month, to the Enforcement Division (MC 224), by the 20th day of the following month for each discharge which is described by this permit whether or not a discharge is made for that month. Monitoring results must be reported on an approved self-report form, that is signed and certified as required by Monitoring and Reporting Requirements No. 10.

As provided by state law, the permittee is subject to administrative, civil and criminal penalties, as applicable, for negligently or knowingly violating the Clean Water Act, the Texas Water Code, Chapters 26, 27, and 28, and Texas Health and Safety Code, Chapter 361, including but not limited to knowingly making any false statement, representation, or certification on any report, record, or other document submitted or required to be maintained under this permit, including monitoring reports or reports of compliance or noncompliance, or falsifying, tampering with or knowingly rendering inaccurate any monitoring device or method required by this permit or violating any other requirement imposed by state or federal regulations.

2. Test Procedures

Unless otherwise specified in this permit, test procedures for the analysis of pollutants shall comply with procedures specified in 30 TAC §§319.11 - 319.12. Measurements, tests and calculations shall be accurately accomplished in a representative manner.

3. Records of Results

   a. Monitoring samples and measurements shall be taken at times and in a manner so as to be representative of the monitored activity.

   b. Except for records of monitoring information required by this permit related to the permittee's sewage sludge use and disposal activities, which shall be retained for a period of at least five years (or longer as required by 40 CFR Part 503), monitoring and reporting records, including strip charts and records of calibration and maintenance, copies of all records required by this permit, records of all data used to complete the application for this permit, and the certification required by 40 CFR § 264.73(b)(9) shall be retained at the facility site, or shall be readily available for review by a TCEQ representative for a period of three years from the date of the record or sample, measurement, report, application or certification. This period shall be extended at the request of the Executive Director.

   c. Records of monitoring activities shall include the following:

      i. date, time and place of sample or measurement;
      ii. identity of individual who collected the sample or made the measurement.
      iii. date and time of analysis;
      iv. identity of the individual and laboratory who performed the analysis;
      v. the technique or method of analysis; and
      vi. the results of the analysis or measurement and quality assurance/quality control records.

   The period during which records are required to be kept shall be automatically extended to the date of the final disposition of any administrative or judicial enforcement action that may be instituted against the permittee.

4. Additional Monitoring by Permittee

   If the permittee monitors any pollutant at the location(s) designated herein more frequently than required by this permit using approved analytical methods as specified above, all results of such monitoring shall be included in the calculation and reporting of the values submitted on the approved self-report form. Increased frequency of sampling shall be indicated on the self-report form.

5. Calibration of Instruments

   All automatic flow measuring or recording devices and all totalizing meters for measuring flows shall be accurately calibrated by a trained person at plant start-up and as often thereafter as necessary to ensure accuracy, but not less often than annually unless authorized by the Executive Director for a longer period. Such person shall verify in writing that the device is operating properly and giving accurate results. Copies of the verification shall be retained at the facility site and/or shall be readily available for review by a TCEQ representative for a period of three years.

6. Compliance Schedule Reports

   Reports of compliance or noncompliance with, or any progress reports on, interim and final requirements contained in any compliance schedule of the permit shall be submitted no later than 14 days following each schedule date to the Regional Office and the Enforcement Division (MC 224).

7. Noncompliance Notification

   a. In accordance with 30 TAC § 305.125(9) any noncompliance which may endanger human health or safety, or the environment shall be reported by the permittee to the TCEQ. Report of such information shall be provided orally or by facsimile transmission (FAX) to the Regional Office within 24 hours of becoming aware of the noncompliance. A written submission of such information shall also be provided by the permittee to the Regional Office and the Enforcement Division (MC 224) within five working days of becoming aware of the noncompliance. The written submission shall contain a description of the noncompliance and its cause; the potential danger to human health or safety, or the environment; the period of noncompliance, including exact dates and times; if the noncompliance has not been corrected, the time it is expected to continue; and steps taken or planned to reduce, eliminate, and prevent recurrence of the noncompliance, and to mitigate its adverse effects.

   b. The following violations shall be reported under Monitoring and Reporting Requirement 7.a.:

i. Unauthorized discharges as defined in Permit Condition 2(g).
ii. Any unanticipated bypass which exceeds any effluent limitation in the permit.
iii. Violation of a permitted maximum daily discharge limitation for pollutants listed specifically in the Other Requirements section of an Industrial TPDES permit.

c. In addition to the above, any effluent violation which deviates from the permitted effluent limitation by more than 40% shall be reported by the permittee in writing to the Regional Office and the Enforcement Division (MC 224) within 5 working days of becoming aware of the noncompliance.

d. Any noncompliance other than that specified in this section, or any required information not submitted or submitted incorrectly, shall be reported to the Enforcement Division (MC 224) as promptly as possible. For effluent limitation violations, noncompliances shall be reported on the approved self-report form.

8. In accordance with the procedures described in 30 TAC §§ 35.301 - 35.303 (relating to Water Quality Emergency and Temporary Orders) if the permittee knows in advance of the need for a bypass, it shall submit prior notice by applying for such authorization.

9. Changes in Discharges of Toxic Substances

All existing manufacturing, commercial, mining, and silvicultural permittees shall notify the Regional Office, orally or by facsimile transmission within 24 hours, and both the Regional Office and the Enforcement Division (MC 224) in writing within five (5) working days, after becoming aware of or having reason to believe:

a. That any activity has occurred or will occur which would result in the discharge, on a routine or frequent basis, of any toxic pollutant listed at 40 CFR Part 122, Appendix D, Tables II and III (excluding Total Phenols) which is not limited in the permit, if that discharge will exceed the highest of the following "notification levels":

i. One hundred micrograms per liter (100 μg/L);
ii. Two hundred micrograms per liter (200 μg/L) for acrolein and acrylonitrile; five hundred micrograms per liter (500 μg/L) for 2,4-dinitrophenol and for 2-methyl-4,6-dinitrophenol; and one milligram per liter (1 mg/L) for antimony;
iii. Five (5) times the maximum concentration value reported for that pollutant in the permit application; or
iv. The level established by the TCEQ.

b. That any activity has occurred or will occur which would result in any discharge, on a nonroutine or infrequent basis, of a toxic pollutant which is not limited in the permit, if that discharge will exceed the highest of the following "notification levels":

i. Five hundred micrograms per liter (500 μg/L);
ii. One milligram per liter (1 mg/L) for antimony;
iii. Ten (10) times the maximum concentration value reported for that pollutant in the permit application; or
iv. The level established by the TCEQ.

10. Signatories to Reports

All reports and other information requested by the Executive Director shall be signed by the person and in the manner required by 30 TAC § 305.128 (relating to Signatories to Reports).

11. All Publicly Owned Treatment Works (POTWs) must provide adequate notice to the Executive Director of the following:

a. Any new introduction of pollutants into the POTW from an indirect discharger which would be subject to section 301 or 306 of the CWA if it were directly discharging those pollutants;

b. Any substantial change in the volume or character of pollutants being introduced into that POTW by a source introducing pollutants into the POTW at the time of issuance of the permit; and

c. For the purpose of this paragraph, adequate notice shall include information on:

i. The quality and quantity of effluent introduced into the POTW; and
ii. Any anticipated impact of the change on the quantity or quality of effluent to be discharged from the POTW.

PERMIT CONDITIONS

1. General

   a. When the permittee becomes aware that it failed to submit any relevant facts in a permit application, or submitted incorrect information in an application or in any report to the Executive Director, it shall promptly submit such facts or information.

   b. This permit is granted on the basis of the information supplied and representations made by the permittee during action on an application, and relying upon the accuracy and completeness of that information and those representations. After notice and opportunity for a hearing, this permit may be modified, suspended, or revoked, in whole or in part, in accordance with 30 TAC Chapter 305, Subchapter D, during its term for good cause including, but not limited to, the following:

      i. Violation of any terms or conditions of this permit;
      ii. Obtaining this permit by misrepresentation or failure to disclose fully all relevant facts; or
      iii. A change in any condition that requires either a temporary or permanent reduction or elimination of the authorized discharge.

   c. The permittee shall furnish to the Executive Director, upon request and within a reasonable time, any information to determine whether cause exists for amending, revoking, suspending or terminating the permit. The permittee shall also furnish to the Executive Director, upon request, copies of records required to be kept by the permit.

2. Compliance

   a. Acceptance of the permit by the person to whom it is issued constitutes acknowledgment and agreement that such person will comply with all the terms and conditions embodied in the permit, and the rules and other orders of the Commission.

   b. The permittee has a duty to comply with all conditions of the permit. Failure to comply with any permit condition constitutes a violation of the permit and the Texas Water Code or the Texas Health and Safety Code, and is grounds for enforcement action, for permit amendment, revocation or suspension, or for denial of a permit renewal application or an application for a permit for another facility.

   c. It shall not be a defense for a permittee in an enforcement action that it would have been necessary to halt or reduce the permitted activity in order to maintain compliance with the conditions of the permit.

   d. The permittee shall take all reasonable steps to minimize or prevent any discharge or sludge use or disposal or other permit violation which has a reasonable likelihood of adversely affecting human health or the environment.

   e. Authorization from the Commission is required before beginning any change in the permitted facility or activity that may result in noncompliance with any permit requirements.

   f. A permit may be amended, suspended and reissued, or revoked for cause in accordance with 30 TAC §§ 305.62 and 305.66 and Texas Water Code Section 7.302. The filing of a request by the permittee for a permit amendment, suspension and reissuance, or termination, or a notification of planned changes or anticipated noncompliance, does not stay any permit condition.

   g. There shall be no unauthorized discharge of wastewater or any other waste. For the purpose of this permit, an unauthorized discharge is considered to be any discharge of wastewater into or adjacent to water in the state at any location not permitted as an outfall or otherwise defined in the Other Requirements section of this permit.

   h. In accordance with 30 TAC § 305.535(a), the permittee may allow any bypass to occur from a TPDES permitted facility which does not cause permitted effluent limitations to be exceeded or an unauthorized discharge to occur, but only if the bypass is also for essential maintenance to assure efficient operation.

   i. The permittee is subject to administrative, civil, and criminal penalties, as applicable, under Texas Water Code §§7.051 - 7.075 (relating to Administrative Penalties), 7.101 - 7.111 (relating to Civil Penalties), and 7.141 - 7.202 (relating to Criminal Offenses and Penalties) for violations including, but not limited to, negligently or knowingly violating the federal Clean Water Act, §§ 301, 302, 306, 307, 308, 318, or 405, or any condition or limitation implementing any sections in a permit issued under the CWA § 402, or any requirement imposed in a pretreatment program approved under the CWA §§ 402 (a)(3) or 402 (b)(8).

3. Inspections and Entry

   a. Inspection and entry shall be allowed as prescribed in the Texas Water Code Chapters 26, 27, and 28, and Texas Health and Safety Code Chapter 361.

   b. The members of the Commission and employees and agents of the Commission are entitled to enter any public or private property at any reasonable time for the purpose of inspecting and investigating conditions relating to the quality of water in the state or the compliance with any rule, regulation, permit or other order of the Commission. Members, employees, or agents of the Commission and Commission contractors are entitled to enter public or private property at any reasonable time to investigate or monitor or, if the responsible party is not responsive or there is an immediate danger to public health or the environment, to remove or remediate a condition related to the quality of water in the state. Members, employees, Commission contractors, or agents acting under this authority who enter private property shall observe the establishment's rules and regulations concerning safety, internal security, and fire protection, and if the property has management in residence, shall notify management or the person then in charge of his presence and shall exhibit proper credentials. If any member, employee, Commission contractor, or agent is refused the right to enter in or on public or private property under this authority, the Executive Director may invoke the remedies authorized in Texas Water Code Section 7.002. The statement above, that Commission entry shall occur in accordance with an establishment's rules and regulations concerning safety, internal security, and fire protection, is not grounds for denial or restriction of entry to any part of the facility, but merely describes the Commission's duty to observe appropriate rules and regulations during an inspection.

4. Permit Amendment and/or Renewal

   a. The permittee shall give notice to the Executive Director as soon as possible of any planned physical alterations or additions to the permitted facility if such alterations or additions would require a permit amendment or result in a violation of permit requirements. Notice shall also be required under this paragraph when:

      i. The alteration or addition to a permitted facility may meet one of the criteria for determining whether a facility is a new source in accordance with 30 TAC § 305.534 (relating to New Sources and New Dischargers); or

      ii. The alteration or addition could significantly change the nature or increase the quantity of pollutants discharged. This notification applies to pollutants which are subject neither to effluent limitations in the permit, nor to notification requirements in Monitoring and Reporting Requirements No. 9;

      iii. The alteration or addition results in a significant change in the permittee's sludge use or disposal practices, and such alteration, addition, or change may justify the application of permit conditions that are different from or absent in the existing permit, including notification of additional use or disposal sites not reported during the permit application process or not reported pursuant to an approved land application plan.

   b. Prior to any facility modifications, additions, or expansions that will increase the plant capacity beyond the permitted flow, the permittee must apply for and obtain proper authorization from the Commission before commencing construction.

   c. The permittee must apply for an amendment or renewal at least 180 days prior to expiration of the existing permit in order to continue a permitted activity after the expiration date of the permit. If an application is submitted prior to the expiration date of the permit, the existing permit shall remain in effect until the application is approved, denied, or returned. If the application is returned or denied, authorization to continue such activity shall terminate upon the effective date of the action. If an application is not submitted prior to the expiration date of the permit, the permit shall expire and authorization to continue such activity shall terminate.

   d. Prior to accepting or generating wastes which are not described in the permit application or which would result in a significant change in the quantity or quality of the existing discharge, the permittee must report the proposed changes to the Commission. The permittee must apply for a permit amendment reflecting any necessary changes in permit conditions, including effluent limitations for pollutants not identified and limited by this permit.

   e. In accordance with the Texas Water Code § 26.029(b), after a public hearing, notice of which shall be given to the permittee, the Commission may require the permittee, from time to time, for good cause, in accordance with applicable laws, to conform to new or additional conditions.

   f. If any toxic effluent standard or prohibition (including any schedule of compliance specified in such effluent standard or prohibition) is promulgated under Section 307(a) of the Clean Water Act for a toxic pollutant which is present in the discharge and that standard or prohibition is more stringent than any limitation on the pollutant in this permit, this permit

shall be modified or revoked and reissued to conform to the toxic effluent standard or prohibition. The permittee shall comply with effluent standards or prohibitions established under Section 307(a) of the Clean Water Act for toxic pollutants within the time provided in the regulations that established those standards or prohibitions, even if the permit has not yet been modified to incorporate the requirement.

5. Permit Transfer

   a. Prior to any transfer of this permit, Commission approval must be obtained. The Commission shall be notified in writing of any change in control or ownership of facilities authorized by this permit. Such notification should be sent to the Applications Review and Processing Team (MC 148) of the Water Quality Division.

   b. A permit may be transferred only according to the provisions of 30 TAC § 305.64 (relating to Transfer of Permits) and 30 TAC § 50.133 (relating to Executive Director Action on Application or WQMP update).

6. Relationship to Hazardous Waste Activities

   This permit does not authorize any activity of hazardous waste storage, processing, or disposal which requires a permit or other authorization pursuant to the Texas Health and Safety Code.

7. Relationship to Water Rights

   Disposal of treated effluent by any means other than discharge directly to water in the state must be specifically authorized in this permit and may require a permit pursuant to Chapter 11 of the Texas Water Code.

8. Property Rights

   A permit does not convey any property rights of any sort, or any exclusive privilege.

9. Permit Enforceability

   The conditions of this permit are severable, and if any provision of this permit, or the application of any provision of this permit to any circumstances, is held invalid, the application of such provision to other circumstances, and the remainder of this permit, shall not be affected thereby.

10. Relationship to Permit Application

    The application pursuant to which the permit has been issued is incorporated herein; provided, however, that in the event of a conflict between the provisions of this permit and the application, the provisions of the permit shall control.

11. Notice of Bankruptcy.

    a. Each permittee shall notify the executive director, in writing, immediately following the filing of a voluntary or involuntary petition for bankruptcy under any chapter of Title 11 (Bankruptcy) of the United States Code (11 USC) by or against:
       i. the permittee;
       ii. an entity (as that term is defined in 11 USC, §101(14)) controlling the permittee or listing the permit or permittee as property of the estate; or
       iii. an affiliate (as that term is defined in 11 USC, §101(2)) of the permittee.

    b. This notification must indicate:
       i. the name of the permittee and the permit number(s);
       ii. the bankruptcy court in which the petition for bankruptcy was filed; and
       iii. the date of filing of the petition.

OPERATIONAL REQUIREMENTS

1. The permittee shall at all times ensure that the facility and all of its systems of collection, treatment, and disposal are properly operated and maintained. This includes, but is not limited to, the regular, periodic examination of wastewater solids within the treatment plant by the operator in order to maintain an appropriate quantity and quality of solids inventory as described in the various operator training manuals and according to accepted industry standards for process control. Process control, maintenance, and operations records shall be retained at the facility site, or shall be readily available for review by a TCEQ representative, for a period of three years.

2. Upon request by the Executive Director, the permittee shall take appropriate samples and provide proper analysis in order to demonstrate compliance with Commission rules. Unless otherwise specified in this permit or otherwise ordered by the Commission, the permittee shall comply with all applicable provisions of 30 TAC Chapter 312 concerning sewage sludge use and disposal and 30 TAC §§ 319.21 - 319.29 concerning the discharge of certain hazardous metals.

3. Domestic wastewater treatment facilities shall comply with the following provisions:

   a. The permittee shall notify the Municipal Permits Team, Wastewater Permitting Section (MC 148) of the Water Quality Division, in writing, of any facility expansion at least 90 days prior to conducting such activity.

   b. The permittee shall submit a closure plan for review and approval to the Municipal Permits Team, Wastewater Permitting Section (MC 148) of the Water Quality Division, for any closure activity at least 90 days prior to conducting such activity. Closure is the act of permanently taking a waste management unit or treatment facility out of service and includes the permanent removal from service of any pit, tank, pond, lagoon, surface impoundment and/or other treatment unit regulated by this permit.

4. The permittee is responsible for installing prior to plant start-up, and subsequently maintaining, adequate safeguards to prevent the discharge of untreated or inadequately treated wastes during electrical power failures by means of alternate power sources, standby generators, and/or retention of inadequately treated wastewater.

5. Unless otherwise specified, the permittee shall provide a readily accessible sampling point and, where applicable, an effluent flow measuring device or other acceptable means by which effluent flow may be determined.

6. The permittee shall remit an annual water quality fee to the Commission as required by 30 TAC Chapter 21. Failure to pay the fee may result in revocation of this permit under Texas Water Code § 7.302(b)(6).

7. Documentation

   For all written notifications to the Commission required of the permittee by this permit, the permittee shall keep and make available a copy of each such notification under the same conditions as self-monitoring data are required to be kept and made available. Except for information required for TPDES permit applications, effluent data, including effluent data in permits, draft permits and permit applications, and other information specified as not confidential in 30 TAC § 1.5(d), any information submitted pursuant to this permit may be claimed as confidential by the submitter. Any such claim must be asserted in the manner prescribed in the application form or by stamping the words "confidential business information" on each page containing such information. If no claim is made at the time of submission, information may be made available to the public without further notice. If the Commission or Executive Director agrees with the designation of confidentiality, the TCEQ will not provide the information for public inspection unless required by the Texas Attorney General or a court pursuant to an open records request. If the Executive Director does not agree with the designation of confidentiality, the person submitting the information will be notified.

8. Facilities which generate domestic wastewater shall comply with the following provisions; domestic wastewater treatment facilities at permitted industrial sites are excluded.

   a. Whenever flow measurements for any domestic sewage treatment facility reach 75 percent of the permitted daily average or annual average flow for three consecutive months, the permittee must initiate engineering and financial planning for expansion and/or upgrading of the domestic wastewater treatment and/or collection facilities. Whenever the flow reaches 90 percent of the permitted daily average or annual average flow for three consecutive months, the permittee shall obtain necessary authorization from the Commission to commence construction of the necessary additional treatment and/or collection facilities. In the case of a domestic wastewater treatment facility which reaches 75 percent of the permitted daily average or annual average flow for three consecutive months, and the planned population to be served or the quantity of waste produced is not expected to exceed the design limitations of the treatment facility, the permittee shall submit an engineering report supporting this claim to the Executive Director of the Commission.

      If in the judgement of the Executive Director the population to be served will not cause permit noncompliance, then the requirement of this section may be waived. To be effective, any waiver must be in writing and signed by the Director of the Enforcement Division (MC 149) of the Commission, and such waiver of these requirements will be reviewed upon expiration of the existing permit; however, any such waiver shall not be interpreted as condoning or excusing any violation of any permit parameter.

   b. The plans and specifications for domestic sewage collection and treatment works associated with any domestic permit must be approved by the Commission, and failure to secure approval before commencing construction of such works or making a discharge is a violation of this permit and each day is an additional violation until approval has been secured.

c. Permits for domestic wastewater treatment plants are granted subject to the policy of the Commission to encourage the development of area-wide waste collection, treatment and disposal systems. The Commission reserves the right to amend any domestic wastewater permit in accordance with applicable procedural requirements to require the system covered by this permit to be integrated into an area-wide system, should such be developed; to require the delivery of the wastes authorized to be collected in, treated by or discharged from said system, to such area-wide system; or to amend this permit in any other particular to effectuate the Commission's policy. Such amendments may be made when the changes required are advisable for water quality control purposes and are feasible on the basis of waste treatment technology, engineering, financial, and related considerations existing at the time the changes are required, exclusive of the loss of investment in or revenues from any then existing or proposed waste collection, treatment or disposal system.

9. Domestic wastewater treatment plants shall be operated and maintained by sewage plant operators holding a valid certificate of competency at the required level as defined in 30 TAC Chapter 30.

10. For Publicly Owned Treatment Works (POTWs), the 30-day average (or monthly average) percent removal for BOD and TSS shall not be less than 85 percent, unless otherwise authorized by this permit.

11. Facilities which generate industrial solid waste as defined in 30 TAC § 335.1 shall comply with these provisions:

    a. Any solid waste, as defined in 30 TAC § 335.1 (including but not limited to such wastes as garbage, refuse, sludge from a waste treatment, water supply treatment plant or air pollution control facility, discarded materials, discarded materials to be recycled, whether the waste is solid, liquid, or semisolid), generated by the permittee during the management and treatment of wastewater, must be managed in accordance with all applicable provisions of 30 TAC Chapter 335, relating to Industrial Solid Waste Management.

    b. Industrial wastewater that is being collected, accumulated, stored, or processed before discharge through any final discharge outfall, specified by this permit, is considered to be industrial solid waste until the wastewater passes through the actual point source discharge and must be managed in accordance with all applicable provisions of 30 TAC Chapter 335.

    c. The permittee shall provide written notification, pursuant to the requirements of 30 TAC § 335.8(b)(1), to the Environmental Cleanup Section (MC 127) of the Remediation Division informing the Commission of any closure activity involving an Industrial Solid Waste Management Unit, at least 90 days prior to conducting such an activity.

    d. Construction of any industrial solid waste management unit requires the prior written notification of the proposed activity to the Registration and Reporting Section (MC 129) of the Permitting and Remediation Support Division. No person shall dispose of industrial solid waste, including sludge or other solids from wastewater treatment processes, prior to fulfilling the deed recordation requirements of 30 TAC § 335.5.

    e. The term "industrial solid waste management unit" means a landfill, surface impoundment, waste-pile, industrial furnace, incinerator, cement kiln, injection well, container, drum, salt dome waste containment cavern, or any other structure vessel, appurtenance, or other improvement on land used to manage industrial solid waste.

    f. The permittee shall keep management records for all sludge (or other waste) removed from any wastewater treatment process. These records shall fulfill all applicable requirements of 30 TAC Chapter 335 and must include the following, as it pertains to wastewater treatment and discharge:

        i. Volume of waste and date(s) generated from treatment process;
        ii. Volume of waste disposed of on-site or shipped off-site;
        iii. Date(s) of disposal;
        iv. Identity of hauler or transporter;
        v. Location of disposal site; and
        vi. Method of final disposal.

    The above records shall be maintained on a monthly basis. The records shall be retained at the facility site, or shall be readily available for review by authorized representatives of the TCEQ for at least five years.

12. For industrial facilities to which the requirements of 30 TAC Chapter 335 do not apply, sludge and solid wastes, including tank cleaning and contaminated solids for disposal, shall be disposed of in accordance with Chapter 361 of the Texas Health and Safety Code.

SLUDGE PROVISIONS

The permittee is authorized to dispose of sludge only at a Texas Commission on Environmental Quality (TCEQ) authorized land application site or co-disposal landfill. **The disposal of sludge by land application on property owned, leased or under the direct control of the permittee is a violation of the permit unless the site is authorized with the TCEQ. This provision authorizes Distribution and Marketing of sludge. This provision does not authorize land application of Class A Sludge. This provision does not authorize the permittee to land apply sludge on property owned, leased or under the direct control of the permittee.**

SECTION I. REQUIREMENTS APPLYING TO ALL SEWAGE SLUDGE LAND APPLICATION

A. General Requirements

1. The permittee shall handle and dispose of sewage sludge in accordance with 30 TAC Chapter 312 and all other applicable state and federal regulations in a manner which protects public health and the environment from any reasonably anticipated adverse effects due to any toxic pollutants which may be present in the sludge.

2. In all cases, if the person (permit holder) who prepares the sewage sludge supplies the sewage sludge to another person for land application use or to the owner or lease holder of the land, the permit holder shall provide necessary information to the parties who receive the sludge to assure compliance with these regulations.

3. The permittee shall give 180 days prior notice to the Executive Director in care of the Wastewater Permitting Section (MC 148) of the Water Quality Division of any change planned in the sewage sludge disposal practice.

B. Testing Requirements

1. Sewage sludge shall be tested annually in accordance with the method specified in both 40 CFR Part 261, Appendix II and 40 CFR Part 268, Appendix I [Toxicity Characteristic Leaching Procedure (TCLP)] or other method, which receives the prior approval of the TCEQ for the contaminants listed in Table 1 of 40 CFR Section 261.24. Sewage sludge failing this test shall be managed according to RCRA standards for generators of hazardous waste, and the waste's disposition must be in accordance with all applicable requirements for hazardous waste processing, storage, or disposal. Following failure of any TCLP test, the management or disposal of sewage sludge at a facility other than an authorized hazardous waste processing, storage, or disposal facility shall be prohibited until such time as the permittee can demonstrate the sewage sludge no longer exhibits the hazardous waste toxicity characteristics (as demonstrated by the results of the TCLP tests). A written report shall be provided to both the TCEQ Registration and Reporting Section (MC 129) of the Permitting and Remediation Support Division and the Regional Director (MC Region 12) within 7 days after failing the TCLP Test.

   The report shall contain test results, certification that unauthorized waste management has stopped and a summary of alternative disposal plans that comply with RCRA standards for the management of hazardous waste. The report shall be addressed to: Director, Permitting and Remediation Support Division (MC 129), Texas Commission on Environmental Quality, P. O. Box 13087, Austin, Texas 78711-3087. In addition, the permittee shall prepare an annual report on the results of all sludge toxicity testing. This annual report shall be submitted to the TCEQ Regional Office (MC Region 12) and the Water Quality Compliance Monitoring Team (MC 224) of the Enforcement Division by September 1 of each year.

2. Sewage sludge shall not be applied to the land if the concentration of the pollutants exceed the pollutant concentration criteria in Table 1. The frequency of testing for pollutants in Table 1 is found in Section I.C.

TABLE 1

Pollutant	Ceiling Concentration (milligrams per kilogram)*
Arsenic	75
Cadmium	85
Chromium	3000
Copper	4300
Lead	840
Mercury	57
Molybdenum	75
Nickel	420
PCBs	49
Selenium	100
Zinc	7500

* Dry weight basis

3. Pathogen Control

All sewage sludge that is applied to agricultural land, forest, a public contact site, or a reclamation site shall be treated by one of the following methods to ensure that the sludge meets either the Class A or Class B pathogen requirements.

a. Six alternatives are available to demonstrate compliance with Class A sewage sludge. The first 4 options require either the density of fecal coliform in the sewage sludge be less than 1000 Most Probable Number (MPN) per gram of total solids (dry weight basis), or the density of Salmonella sp. bacteria in the sewage sludge be less than three MPN per four grams of total solids (dry weight basis) at the time the sewage sludge is used or disposed. Below are the additional requirements necessary to meet the definition of a Class A sludge.

Alternative 1 - The temperature of the sewage sludge that is used or disposed shall be maintained at or above a specific value for a period of time. See 30 TAC Section 312.82(a)(2)(A) for specific information.

Alternative 2 - The pH of the sewage sludge that is used or disposed shall be raised to above 12 std. units and shall remain above 12 std. units for 72 hours.

The temperature of the sewage sludge shall be above 52 degrees Celsius for 12 hours or longer during the period that the pH of the sewage sludge is above 12 std. units.

At the end of the 72-hour period during which the pH of the sewage sludge is above 12 std. units, the sewage sludge shall be air dried to achieve a percent solids in the sewage sludge greater than 50 percent.

Alternative 3 - The sewage sludge shall be analyzed for enteric viruses prior to pathogen treatment. The limit for enteric viruses is less than one Plaque-forming Unit per four grams of total solids (dry weight basis) either before or following pathogen treatment. See 30 TAC Section 312.82(a)(2)(C)(i-iii) for specific information. The sewage sludge shall be analyzed for viable helminth ova prior to pathogen treatment. The limit for viable helminth ova is less than one per four grams of total solids (dry weight basis) either before or following pathogen treatment. See 30 TAC Section 312.82(a)(2)(C)(iv-vi) for specific information.

Alternative 4 - The density of enteric viruses in the sewage sludge shall be less than one Plaque-forming Unit per four grams of total solids (dry weight basis) at the time the sewage sludge is used or disposed. The density of viable helminth ova in the sewage sludge shall be less than one per four grams of total solids (dry weight basis) at the time the sewage sludge is used or disposed.

Alternative 5 (PFRP) - Sewage sludge that is used or disposed of shall be treated in one of the processes to Further Reduce Pathogens (PFRP) described in 40 CFR Part 503, Appendix B. PFRP include composting, heat drying, heat treatment, and thermophilic aerobic digestion.

Alternative 6 (PFRP Equivalent) - Sewage sludge that is used or disposed of shall be treated in a process that has been approved by the U. S. Environmental Protection Agency as being equivalent to those in Alternative 5.

b. Three alternatives are available to demonstrate compliance with Class B criteria for sewage sludge.

Alternative 1 -

i. A minimum of seven random samples of the sewage sludge shall be collected within 48 hours of the time the sewage sludge is used or disposed of during each monitoring episode for the sewage sludge.

ii. The geometric mean of the density of fecal coliform in the samples collected shall be less than either 2,000,000 MPN per gram of total solids (dry weight basis) or 2,000,000 Colony Forming Units per gram of total solids (dry weight basis).

Alternative 2 - Sewage sludge that is used or disposed of shall be treated in one of the Processes to Significantly Reduce Pathogens (PSRP) described in 40 CFR Part 503, Appendix B, so long as all of the following requirements are met by the generator of the sewage sludge.

i. Prior to use or disposal, all the sewage sludge must have been generated from a single location, except as provided in paragraph v. below;

ii. An independent Texas Licensed Professional Engineer must make a certification to the generator of a sewage sludge that the wastewater treatment facility generating the sewage sludge is designed to achieve one of the PSRP at the permitted design loading of the facility. The certification need only be repeated if the design loading of the facility is increased. The certification shall include a statement indicating the design meets all the applicable standards specified in Appendix B of 40 CFR Part 503;

iii. Prior to any off-site transportation or on-site use or disposal of any sewage sludge generated at a wastewater treatment facility, the chief certified operator of the wastewater treatment facility or other responsible official who manages the processes to significantly reduce pathogens at the wastewater treatment facility for the permittee, shall certify that the sewage sludge underwent at least the minimum operational requirements necessary in order to meet one of the PSRP. The acceptable processes and the minimum operational and record keeping requirements shall be in accordance with established U. S. Environmental Protection Agency final guidance;

iv. All certification records and operational records describing how the requirements of this paragraph were met shall be kept by the generator for a minimum of three years and be available for inspection by commission staff for review; and

v. If the sewage sludge is generated from a mixture of sources, resulting from a person who prepares sewage sludge from more than one wastewater treatment facility, the resulting derived product shall meet one of the PSRP, and shall meet the certification, operation, and record keeping requirements of this paragraph.

Alternative 3 - Sewage sludge shall be treated in an equivalent process that has been approved by the U. S. Environmental Protection Agency, so long as all of the following requirements are met by the generator of the sewage sludge.

i. Prior to use or disposal, all the sewage sludge must have been generated from a single location, except as provided in paragraph v. below;

ii. Prior to any off-site transportation or on-site use or disposal of any sewage sludge generated at a wastewater treatment facility, the chief certified operator of the wastewater treatment facility or other responsible official who manages the processes to significantly reduce pathogens at the wastewater treatment facility for the permittee, shall certify that the sewage sludge underwent at least the minimum operational requirements necessary in order to meet one of the PSRP. The acceptable processes and the minimum operational and record keeping requirements shall be in accordance with established U. S. Environmental Protection Agency final guidance;

iii. All certification records and operational records describing how the requirements of this paragraph were met shall be kept by the generator for a minimum of three years and be available for inspection by commission staff for review;

iv. The executive director will accept from the U. S. Environmental Protection Agency a finding of equivalency to the defined PSRP; and

v. If the sewage sludge is generated from a mixture of sources resulting from a person who prepares sewage sludge from more than one wastewater treatment facility, the resulting derived product shall meet one of the Processes to Significantly Reduce Pathogens, and shall meet the certification, operation, and record keeping requirements of this paragraph.

In addition, the following site restrictions must be met if Class B sludge is land applied:

i. Food crops with harvested parts that touch the sewage sludge/soil mixture and are totally above the land surface shall not be harvested for 14 months after application of sewage sludge.

ii. Food crops with harvested parts below the surface of the land shall not be harvested for 20 months after application of sewage sludge when the sewage sludge remains on the land surface for 4 months or longer prior to incorporation into the soil.

iii. Food crops with harvested parts below the surface of the land shall not be harvested for 38 months after application of sewage sludge when the sewage sludge remains on the land surface for less than 4 months prior to incorporation into the soil.

iv. Food crops, feed crops, and fiber crops shall not be harvested for 30 days after application of sewage sludge.

v. Animals shall not be allowed to graze on the land for 30 days after application of sewage sludge.

vi. Turf grown on land where sewage sludge is applied shall not be harvested for 1 year after application of the sewage sludge when the harvested turf is placed on either land with a high potential for public exposure or a lawn.

vii. Public access to land with a high potential for public exposure shall be restricted for 1 year after application of sewage sludge.

viii. Public access to land with a low potential for public exposure shall be restricted for 30 days after application of sewage sludge.

ix. Land application of sludge shall be in accordance with the buffer zone requirements found in 30 TAC Section 312.44.

4. Vector Attraction Reduction Requirements

All bulk sewage sludge that is applied to agricultural land, forest, a public contact site, or a reclamation site shall be treated by one of the following alternatives 1 through 10 for Vector Attraction Reduction.

Alternative 1 - The mass of volatile solids in the sewage sludge shall be reduced by a minimum of 38 percent.

Alternative 2 - If Alternative 1 cannot be met for an anaerobically digested sludge, demonstration can be made by digesting a portion of the previously digested sludge anaerobically in the laboratory in a bench-scale unit for 40 additional days at a temperature between 30 and 37 degrees Celsius. Volatile solids must be reduced by less than 17 percent to demonstrate compliance.

Alternative 3 - If Alternative 1 cannot be met for an aerobically digested sludge, demonstration can be made by digesting a portion of the previously digested sludge with a percent solids of two percent or less aerobically in the laboratory in a bench-scale unit for 30 additional days at 20 degrees Celsius. Volatile solids must be reduced by less than 15 percent to demonstrate compliance.

Alternative 4 - The specific oxygen uptake rate (SOUR) for sewage sludge treated in an aerobic process shall be equal to or less than 1.5 milligrams of oxygen per hour per gram of total solids (dry weight basis) at a temperature of 20 degrees Celsius.

Alternative 5 - Sewage sludge shall be treated in an aerobic process for 14 days or longer. During that time, the temperature of the sewage sludge shall be higher than 40 degrees Celsius and the average temperature of the sewage sludge shall be higher than 45 degrees Celsius.

Alternative 6 - The pH of sewage sludge shall be raised to 12 or higher by alkali addition and, without the addition of more alkali shall remain at 12 or higher for two hours and then remain at a pH of 11.5 or higher for an additional 22 hours at the time the sewage sludge is prepared for sale or given away in a bag or other container.

Alternative 7 - The percent solids of sewage sludge that does not contain unstabilized solids generated in a primary wastewater treatment process shall be equal to or greater than 75 percent based on the moisture content and total solids prior to mixing with other materials. Unstabilized solids are defined as organic materials in sewage sludge that have not been treated in either an aerobic or anaerobic treatment process.

Alternative 8 - The percent solids of sewage sludge that contains unstabilized solids generated in a primary wastewater treatment process shall be equal to or greater than 90 percent based on the moisture content and total solids prior to mixing with other materials at the time the sludge is used. Unstabilized solids are defined as organic materials in sewage sludge that have not been treated in either an aerobic or anaerobic treatment process.

Alternative 9 -

i. Sewage sludge shall be injected below the surface of the land.

ii. No significant amount of the sewage sludge shall be present on the land surface within one hour after the sewage sludge is injected.

iii. When sewage sludge that is injected below the surface of the land is Class A with respect to pathogens, the sewage sludge shall be injected below the land surface within eight hours after being discharged from the pathogen treatment process.

Alternative 10-

i. Sewage sludge applied to the land surface or placed on a surface disposal site shall be incorporated into the soil within six hours after application to or placement on the land.

ii. When sewage sludge that is incorporated into the soil is Class A with respect to pathogens, the sewage sludge shall be applied to or placed on the land within eight hours after being discharged from the pathogen treatment process.

C. Monitoring Requirements

Toxicity Characteristic Leaching Procedure (TCLP) Test - annually

PCBs - annually

All metal constituents and Fecal coliform or Salmonella sp. bacteria shall be monitored at the appropriate frequency shown below, pursuant to 30 TAC Section 312.46(a)(1):

Amount of sewage sludge (*) metric tons per 365-day period			Monitoring Frequency
0	to less than	290	Once/Year
290	to less than	1,500	Once/Quarter
1,500	to less than	15,000	Once/Two Months
15,000	or greater		Once/Month

(*) The amount of bulk sewage sludge applied to the land (dry weight basis).

Representative samples of sewage sludge shall be collected and analyzed in accordance with the methods referenced in 30 TAC Section 312.7.

SECTION II. REQUIREMENTS SPECIFIC TO BULK SEWAGE SLUDGE FOR APPLICATION TO THE LAND MEETING CLASS A or B PATHOGEN REDUCTION AND THE CUMULATIVE LOADING RATES IN TABLE 2, OR CLASS B PATHOGEN REDUCTION AND THE POLLUTANT CONCENTRATIONS IN TABLE 3

For those permittees meeting Class A or B pathogen reduction requirements and that meet the cumulative loading rates in Table 2 below, or the Class B pathogen reduction requirements and contain concentrations of pollutants below listed in Table 3, the following conditions apply:

A. Pollutant Limits

Table 2

Pollutant	Cumulative Pollutant Loading Rate (pounds per acre)
Arsenic	36
Cadmium	35
Chromium	2677
Copper	1339
Lead	268
Mercury	15
Molybdenum	Report Only
Nickel	375
Selenium	89
Zinc	2500

Table 3

Pollutant	Monthly Average Concentration (milligrams per kilogram)*
Arsenic	41
Cadmium	39
Chromium	1200
Copper	1500
Lead	300
Mercury	17
Molybdenum	Report Only
Nickel	420
Selenium	36
Zinc	2800

* Dry weight basis

B. Pathogen Control

All bulk sewage sludge that is applied to agricultural land, forest, a public contact site, a reclamation site, shall be treated by either Class A or Class B pathogen reduction requirements as defined above in Section I.B.3.

C. Management Practices

1. Bulk sewage sludge shall not be applied to agricultural land, forest, a public contact site, or a reclamation site that is flooded, frozen, or snow-covered so that the bulk sewage sludge enters a wetland or other waters in the State.

2. Bulk sewage sludge not meeting Class A requirements shall be land applied in a manner which complies with the Management Requirements in accordance with 30 TAC Section 312.44.

3. Bulk sewage sludge shall be applied at or below the agronomic rate of the cover crop.

4. An information sheet shall be provided to the person who receives bulk sewage sludge sold or given away. The information sheet shall contain the following information:

   a. The name and address of the person who prepared the sewage sludge that is sold or given away in a bag or other container for application to the land.

   b. A statement that application of the sewage sludge to the land is prohibited except in accordance with the instruction on the label or information sheet.

   c. The annual whole sludge application rate for the sewage sludge application rate for the sewage sludge that does not cause any of the cumulative pollutant loading rates in Table 2 above to be exceeded, unless the pollutant concentrations in Table 3 found in Section II above are met.

D. Notification Requirements

1. If bulk sewage sludge is applied to land in a State other than Texas, written notice shall be provided prior to the initial land application to the permitting authority for the State in which the bulk sewage sludge is proposed to be applied. The notice shall include:

   a. The location, by street address, and specific latitude and longitude, of each land application site.

   b. The approximate time period bulk sewage sludge will be applied to the site.

   c. The name, address, telephone number, and National Pollutant Discharge Elimination System permit number (if appropriate) for the person who will apply the bulk sewage sludge.

2. The permittee shall give 180 days prior notice to the Executive Director in care of the Wastewater Permitting Section (MC 148) of the Water Quality Division of any change planned in the sewage sludge disposal practice.

E. Record keeping Requirements

The sludge documents will be retained at the facility site and/or shall be readily available for review by a TCEQ representative. The person who prepares bulk sewage sludge or a sewage sludge material shall develop the following information and shall retain the information at the facility site and/or shall be readily available for review by a TCEQ representative for a period of <u>five years</u>. If the permittee supplies the sludge to another person who land applies the sludge, the permittee shall notify the land applier of the requirements for record keeping found in 30 TAC Section 312.47 for persons who land apply.

1. The concentration (mg/kg) in the sludge of each pollutant listed in Table 3 above and the applicable pollutant concentration criteria (mg/kg), <u>or</u> the applicable cumulative pollutant loading rate and the applicable cumulative pollutant loading rate limit (lbs/ac) listed in Table 2 above.

2. A description of how the pathogen reduction requirements are met (including site restrictions for Class B sludges, if applicable).

3. A description of how the vector attraction reduction requirements are met.

4. A description of how the management practices listed above in Section II.C are being met.

5. The following certification statement:

   "I certify, under penalty of law, that the applicable pathogen requirements in 30 TAC Section 312.82(a) or (b) and the vector attraction reduction requirements in 30 TAC Section 312.83(b) have been met for each site on which bulk sewage sludge is applied. This determination has been made under my direction and supervision in accordance with the system designed to ensure that qualified personnel properly gather and evaluate the information used to determine that the management practices have been met. I am aware that there are significant penalties for false certification including fine and imprisonment."

6. The recommended agronomic loading rate from the references listed in Section II.C.3. above, as well as the actual agronomic loading rate shall be retained.

   The person who applies bulk sewage sludge or a sewage sludge material shall develop the following information and shall retain the information at the facility site and/or shall be readily available for review by a TCEQ representative indefinitely. If the permittee supplies the sludge to another person who land applies the sludge, the permittee shall notify the land applier of the requirements for record keeping found in 30 TAC Section 312.47 for persons who land apply.

   1. A certification statement that all applicable requirements (specifically listed) have been met, and that the permittee understands that there are significant penalties for false certification including fine and imprisonment. See 30 TAC Section 312.47(a)(4)(A)(ii) or 30 TAC Section 312.47(a)(5)(A)(ii), as applicable, and to the permittee's specific sludge treatment activities.

   2. The location, by street address, and specific latitude and longitude, of each site on which sludge is applied.

   3. The number of acres in each site on which bulk sludge is applied.

   4. The date and time sludge is applied to each site.

   5. The cumulative amount of each pollutant in pounds/acre listed in Table 2 applied to each site.

   6. The total amount of sludge applied to each site in dry tons.

The above records shall be maintained on-site on a monthly basis and shall be made available to the Texas Commission on Environmental Quality upon request.

F. Reporting Requirements

The permittee shall report annually to the TCEQ Regional Office (MC Region 12) and Water Quality Compliance Monitoring Team (MC 224) of the Enforcement Division, by September 1 of each year the following information:

1. Results of tests performed for pollutants found in either Table 2 or 3 as appropriate for the permittee's land application practices.

2. The frequency of monitoring listed in Section I.C. which applies to the permittee.

3. Toxicity Characteristic Leaching Procedure (TCLP) results.

4. Identity of hauler(s) and TCEQ transporter number.

5. PCB concentration in sludge in mg/kg.

6. Date(s) of disposal.

7. Owner of disposal site(s).

8. Texas Commission on Environmental Quality registration number, if applicable.

9. Amount of sludge disposal dry weight (lbs/acre) at each disposal site.

10. The concentration (mg/kg) in the sludge of each pollutant listed in Table 1 (defined as a monthly average) as well as the applicable pollutant concentration criteria (mg/kg) listed in Table 3 above, or the applicable pollutant loading rate limit (lbs/acre) listed in Table 2 above if it exceeds 90% of the limit.

11. Level of pathogen reduction achieved (Class A or Class B).

12. Alternative used as listed in Section I.B.3.(a. or b.). Alternatives describe how the pathogen reduction requirements are met. If Class B sludge, include information on how site restrictions were met.

13. Vector attraction reduction alternative used as listed in Section I.B.4.

14. Annual sludge production in dry tons/year.

15. Amount of sludge land applied in dry tons/year.

16. The certification statement listed in either 30 TAC Section 312.47(a)(4)(A)(ii) or 30 TAC Section 312.47(a)(5)(A)(ii) as applicable to the permittee's sludge treatment activities, shall be attached to the annual reporting form.

17. When the amount of any pollutant applied to the land exceeds 90% of the cumulative pollutant loading rate for that pollutant, as described in Table 2, the permittee shall report the following information as an attachment to the annual reporting form.

    a. The location, by street address, and specific latitude and longitude.

    b. The number of acres in each site on which bulk sewage sludge is applied.

    c. The date and time bulk sewage sludge is applied to each site.

    d. The cumulative amount of each pollutant (i.e., pounds/acre) listed in Table 2 in the bulk sewage sludge applied to each site.

    e. The amount of sewage sludge (i.e., dry tons) applied to each site.

    The above records shall be maintained on a monthly basis and shall be made available to the Texas Commission on Environmental Quality upon request.

SECTION III. REQUIREMENTS APPLYING TO ALL SEWAGE SLUDGE DISPOSED IN A MUNICIPAL SOLID WASTE LANDFILL

A. The permittee shall handle and dispose of sewage sludge in accordance with 30 TAC Chapter 330 and all other applicable state and federal regulations to protect public health and the environment from any reasonably anticipated adverse effects due to any toxic pollutants that may be present. The permittee shall ensure that the sewage sludge meets the requirements in 30 TAC Chapter 330 concerning the quality of the sludge disposed in a municipal solid waste landfill.

B. If the permittee generates sewage sludge and supplies that sewage sludge to the owner or operator of a Municipal Solid Waste Landfill (MSWLF) for disposal, the permittee shall provide to the owner or operator of the MSWLF appropriate information needed to be in compliance with the provisions of this permit.

C. The permittee shall give 180 days prior notice to the Executive Director in care of the Wastewater Permitting Section (MC 148) of the Water Quality Division of any change planned in the sewage sludge disposal practice.

D. Sewage sludge shall be tested annually in accordance with the method specified in both 40 CFR Part 261, Appendix II and 40 CFR Part 268, Appendix I (Toxicity Characteristic Leaching Procedure) or other method, which receives the prior approval of the TCEQ for contaminants listed in Table 1 of 40 CFR Section 261.24. Sewage sludge failing this test shall be managed according to RCRA standards for generators of hazardous waste, and the waste's disposition must be in accordance with all applicable requirements for hazardous waste processing, storage, or disposal.

   Following failure of any TCLP test, the management or disposal of sewage sludge at a facility other than an authorized hazardous waste processing, storage, or disposal facility shall be prohibited until such time as the permittee can demonstrate the sewage sludge no longer exhibits the hazardous waste toxicity characteristics (as demonstrated by the results of the TCLP tests). A written report shall be provided to both the TCEQ Registration and Reporting Section (MC 129) of the Permitting and Remediation Support Division and the Regional Director (MC Region 12) of the appropriate TCEQ field office within 7 days after failing the TCLP Test.

   The report shall contain test results, certification that unauthorized waste management has stopped and a summary of alternative disposal plans that comply with RCRA standards for the management of hazardous waste. The report shall be addressed to: Director, Permitting and Remediation Support Division (MC 129), Texas Commission on Environmental Quality, P. O. Box 13087, Austin, Texas 78711-3087. In addition, the permittee shall prepare an annual report on the results of all sludge toxicity testing. This annual report shall be submitted to the TCEQ Regional Office (MC Region 12) and the Water Quality Compliance Monitoring Team (MC 224) of the Enforcement Division by September 1 of each year.

E. Sewage sludge shall be tested as needed, in accordance with the requirements of 30 TAC Chapter 330.

F. Record keeping Requirements

   The permittee shall develop the following information and shall retain the information for five years.

   1. The description (including procedures followed and the results) of all liquid Paint Filter Tests performed.

   2. The description (including procedures followed and results) of all TCLP tests performed.

   The above records shall be maintained on-site on a monthly basis and shall be made available to the Texas Commission on Environmental Quality upon request.

G. Reporting Requirements

The permittee shall report annually to the TCEQ Regional Office (MC Region 12) and Water Quality Compliance Monitoring Team (MC 224) of the Enforcement Division by September 1 of each year the following information:

1. Toxicity Characteristic Leaching Procedure (TCLP) results.
2. Annual sludge production in dry tons/year.
3. Amount of sludge disposed in a municipal solid waste landfill in dry tons/year.
4. Amount of sludge transported interstate in dry tons/year.
5. A certification that the sewage sludge meets the requirements of 30 TAC Chapter 330 concerning the quality of the sludge disposed in a municipal solid waste landfill.
6. Identity of hauler(s) and transporter registration number.
7. Owner of disposal site(s).
8. Location of disposal site(s).
9. Date(s) of disposal.

The above records shall be maintained on-site on a monthly basis and shall be made available to the Texas Commission on Environmental Quality upon request.

SECTION IV. REQUIREMENTS FOR MARKETING AND/OR DISTRIBUTING SLUDGE AND SLUDGE DERIVED MATERIALS.

A. General Requirements

All sludge, derived materials or materials sold or given away in bulk, bag or a container for application to the land shall meet the metal concentrations in Section II.A. Table 3, Class A pathogen requirements in 30 TAC §312.82(a), and the vector attraction reduction requirements in 30 TAC §312.83(b)(1) - §312.83(b)(8).

The product of the concentration of the each pollutant in the sewage sludge and the annual sludge application rate for the sewage sludge shall not cause the annual metal loading rate for the metal in Table 4 below to be exceeded. The procedure used to determine the annual whole sludge application rate is presented in §312.49 title (relating to Appendix A - Procedure to Determine the Annual Whole Sludge Application Rate for a Sewage Sludge).

Table 4 - ANNUAL METAL LOADING RATES

Pollutant	Annual Metal Loading Rate ** (pounds per acre) *
Arsenic	1.8
Cadmium	1.7
Chromium	134.0
Copper	67.0
Lead	13.0
Mercury	0.76
Molybdenum	Report Only
Nickel	18.7
Selenium	4.5
Zinc	125.0

* Dry weight basis
** Per 365-day period

B. Marketing and Distribution Management Practices

1. Sludge may be stockpiled and stored on site under semi-dry conditions for a period not to exceed 24 months.

2. The whole sludge application rate shall not exceed the agronomic rate for any site.

3. The sludge processing site location shall be selected and the site operated in a manner to prevent public health nuisances. Where nuisance conditions exist, the operator shall take necessary action to abate such nuisances.

4. Either a label shall be affixed to the bag or similar enclosure in which sewage sludge is sold or given away for application to the land or an information sheet shall be provided to the person who receives sewage sludge sold or given away in a similar enclosure for application to the land. The label or information sheet shall contain the following information:

   a. the name and address of the person who prepared the sewage sludge for sale or give away in a bag or similar enclosure for application to the land;
   b. a statement that prohibits the application of the sewage sludge to the land except in accordance with the instructions on the label or information sheet;
   c. the annual whole sludge application rate for the sewage sludge that does not cause the annual metal loading rates in Table 4 to be exceeded.

5. If composting, the Sludge Processing Pad Area shall be protected from storm water run-on and runoff. Storm water from the pad shall be routed through the headworks of the Wastewater Treatment Facility. The Sludge Processing Pad shall be constructed of concrete or Executive Director approved material meeting the following requirements:

   a. More than 30% passing a No. 200 mesh sieve
   b. Liquid limit greater than 30%
   c. Plasticity index greater than 15
   d. A minimum thickness of 2 feet
   e. Permeability equal to or less than $1x10^{-7}$ cm/sec
   f. Soil compaction will be 95% standard proctor at optimum moisture content

   The permittee shall furnish certification by a Texas Licensed Professional Engineer that the completed lining meets the appropriate criteria above prior to utilization of the facilities. The certification shall be sent to the TCEQ Regional Office (MC Region 12) and the Water Quality Compliance Monitoring Team (MC 224) of the Enforcement Division.

6. This permit does not authorize the composting of grease or grease trap waste. Any such authorization shall be in accordance with Commission regulations in 30 TAC Chapter 332.

C. Monitoring Requirements

Toxicity Characteristic Leaching Procedure (TCLP) Test	-	Once/Year
PCBs	-	Once/Year

All metal constituents, pathogen density requirements and vector attraction reduction requirements shall be monitored at the appropriate frequency pursuant to 30 TAC §312.46(a)(1).

D. Notification Requirements - None

E. Recordkeeping Requirements

The person who prepares bulk sewage sludge or a sewage sludge material in 30 TAC §312.41(b)(1) or in 30 TAC §312.41(e) shall develop the following information and shall retain the information on-site for <u>five years</u>.

1. The concentration (mg/kg) in the sludge of each pollutant listed in Section II. A. (30 TAC §312.43(b)(3) Table 3).

2. A description of how the Class A pathogen reduction requirements are met.

3. A description of how the vector attraction reduction requirements are met.

4. The annual whole sludge application rate for the sewage sludge that does not cause the annual pollutant loading rates in Table 4 to be exceeded.

5. The following certification statement: "I certify, under penalty of law, that the Class A pathogen requirements in 30 TAC §312.82(a) and the vector attraction reduction requirement in (insert one of the vector attraction reduction requirements in §312.83(b)(1)-(8)) have been met. This determination has been made under my direction and supervision in accordance with the system designed to ensure that qualified personnel properly gather and evaluate the information used to determine that the pathogen requirements and vector attraction reduction requirements have been met. I am aware that there are significant penalties for false certification including the possibility of fine and imprisonment."

   The above records shall be maintained on-site on a monthly basis and shall be made available to the Texas Commission on Environmental Quality upon request.

F. Reporting Requirements

The permittee shall report annually to the TCEQ Regional Office (MC Region 12) and the Water Quality Compliance Monitoring Team (MC 224) of the Enforcement Division by September 1 of each year the following information:

1. Results of tests performed for pollutants found in 30 TAC §312.43(b)(3) Table 3.
2. The frequency of monitoring listed in Section I.C. which applies to the permittee.
3. Toxicity Characteristic Leaching Procedure (TCLP) results.
4. PCB concentration in sludge in mg/kg.
5. Documentation of the level of pathogen reduction achieved (Class A).
6. As listed in Section I.B.3.(a), describe how the pathogen reduction requirements were met.
7. Vector attraction reduction alternative used as listed in Section I.B.4.
8. Annual sludge production in dry tons/year.
9. Amount of sludge land applied in dry tons/year.
10. The following certification statement: "I certify, under penalty of law, that the Class A pathogen requirements in 30 TAC §312.82(a) and the vector attraction reduction requirement in (insert one of the vector attraction reduction requirements in §312.83(b)(1)-(8)) have been met. This determination has been made under my direction and supervision in accordance with the system designed to ensure that qualified personnel properly gather and evaluate the information used to determine that the pathogen requirements and vector attraction reduction requirements have been met. I am aware that there are significant penalties for false certification including the possibility of fine and imprisonment." The certification statement shall be attached to the annual reporting form.

The above records shall be maintained on a monthly basis and shall be made available to the Texas Commission on Environmental Quality upon request.

OTHER REQUIREMENTS

1. The permittee shall employ or contract with one or more licensed wastewater treatment facility operators or wastewater system operations companies holding a valid license or registration according to the requirements of 30 TAC Chapter 30, Occupational Licenses and Registrations and in particular 30 TAC Chapter 30, Subchapter J, Wastewater Operators and Operations Companies.

   This Category B facility must be operated by a chief operator or an operator holding a Category B license or higher. The facility must be operated a minimum of five days per week by the licensed chief operator or an operator holding the required level of license or higher. The licensed chief operator or operator holding the required level of license or higher must be available by telephone or pager seven days per week. Where shift operation of the wastewater treatment facility is necessary, each shift which does not have the on-site supervision of the licensed chief operator must be supervised by an operator in charge who is licensed not less than one level below the category for the facility.

2. The facility is not located in the Coastal Management Program boundary.

3. Chronic toxic criteria apply at the edge of the mixing zone. The mixing zone is defined as 300 feet downstream and 100 feet upstream from the point of discharge.

4. The permittee is hereby placed on notice that this permit may be reviewed by the TCEQ after the completion of any new intensive water quality survey on Segment No. 1002 of the San Jacinto River Basin and any subsequent updating of the water quality model for Segment No. 1002, in order to determine if the limitations and conditions contained herein are consistent with any such revised model. The permit may be amended, pursuant to 30 TAC Section 305.62, as a result of such review. The permittee is also hereby placed on notice that effluent limits may be made more stringent at renewal based on, for example, any change to modeling protocol approved in the TCEQ Continuing Planning Process.

5. The permittee shall comply with the requirements of 30 TAC Section 309.13 (a) through (d). In addition, by ownership of the required buffer zone area, the permittee shall comply with the requirements of 30 TAC Section 309.13(e).

6. The permittee shall comply with 30 TAC Section 311.36 which requires the permittees of all domestic wastewater treatment facilities discharging into the Lake Houston Watershed to install dual-feed chlorination systems capable of automatically changing from one cylinder to another if gaseous chlorination is used for disinfection.

7. The permittee shall provide facilities for the protection of its wastewater treatment facilities from a 100-year flood.

8. Prior to construction of the 7.0 MGD treatment facilities and the 9.4 MGD treatment facilities, the permittee shall submit to the TCEQ Wastewater Permitting Section (MC 148) a summary submittal letter in accordance with the requirements in 30 TAC Section 317.1. If requested by the Wastewater Permitting Section, the permittee shall submit plans, specifications and a final engineering design report which comply with 30 TAC Chapter 317, Design Criteria for Sewerage Systems. The permittee shall clearly show how the treatment system will meet the final permitted effluent limitations required on Page 2a and Page 2b of the permit.

9. The permittee shall notify the TCEQ Regional Office (MC Region 12) and the Applications Review and Processing Team (MC 148) of the Water Quality Division, as well as the Harris County Public Health and Environmental Services Pollution Control Division, in writing at least forty-five (45) days prior to the completion of the new facilities.

10. The permitted facility previously held Permit No. 11872-001.

CONTRIBUTING INDUSTRIES AND PRETREATMENT REQUIREMENTS

1. The permittee shall operate an industrial pretreatment program in accordance with Section 402(b)(8) of the Clean Water Act, the General Pretreatment Regulations (40 CFR Part 403) and the approved City of Houston POTW pretreatment program submitted by the permittee. The pretreatment program was approved on **November 27, 1984**, and modified on **February 26, 1993.** The POTW pretreatment program is hereby incorporated by reference and shall be implemented in a manner consistent with the following requirements:

   a. Industrial user (IU) information shall be kept current to reflect accurate characterization of all IUs;

   b. The frequency and nature of IU compliance monitoring activities by the permittee shall be commensurate with the character, consistency, and volume of waste. However, the permittee is required to inspect and sample the effluent from each significant industrial user (SIU) at least once per year, as required by 40 CFR §403.8 (f)(2)(v). This is in addition to any industrial self-monitoring activities;

   c. The permittee shall enforce and obtain remedies for IU noncompliance with applicable pretreatment standards and requirements;

   d. The permittee shall control through permit, order, or similar means, the contribution to the POTW by each IU to ensure compliance with applicable pretreatment standards and requirements. In the case of SIUs (identified as significant under 40 CFR §403.3(t)), this control shall be achieved through permits or equivalent individual control mechanisms issued to each SIU. Such control mechanisms must be enforceable and contain, at a minimum, the following conditions:

      (1) Statement of duration (in no case more than five years);
      (2) Statement of non-transferability without, at a minimum, prior notification to the POTW and provision of a copy of the existing control mechanism to the new owner or operator;
      (3) Effluent limits based on applicable general pretreatment standards, categorical pretreatment standards, local limits, and State and local law;
      (4) Self-monitoring, sampling, reporting, notification and record keeping requirements, including identification of the pollutants to be monitored, sampling location, sampling frequency, and sample type, based on the applicable general pretreatment standards in 40 CFR Part 403, categorical pretreatment standards, local limits, and State and local law; and;
      (5) Statement of applicable civil and criminal penalties for violation of pretreatment standards and requirements, and any applicable compliance schedule. Such schedules may not extend the compliance date beyond federal deadlines.

   e. The permittee shall evaluate, at least once every two years, whether each SIU needs a plan to control slug discharges. If the POTW decides that a slug control plan is needed, the plan shall contain at least the minimum elements required in 40 CFR §403.8(f)(2)(v);

   f. The permittee shall provide adequate staff, equipment, and support capabilities to carry out all elements of the pretreatment program; and,

   g. The approved program shall not be modified by the permittee without the prior approval of the TCEQ Storm Water & Pretreatment Team (MC 148) of the Water Quality Division.

2. The permittee is under a continuing duty to: establish and enforce specific local limits to implement the provisions of 40 CFR §403.5, develop and enforce local limits as necessary, and modify the approved POTW pretreatment program as necessary to comply with federal, state and local law, as amended. The permittee is required to effectively enforce such limits and to modify their pretreatment program, including the Legal Authority, Enforcement Response Plan and/or Standard Operating Procedures, if required by the Executive Director to reflect changing conditions at the POTW. Substantial modifications will be approved in accordance with 40 CFR §403.18, and modifications will become effective upon approval by the Executive Director in accordance with 40 CFR §403.18.

   Upon approval by the Executive Director of the substantial modification to this approved POTW pretreatment program, the requirement to develop and enforce specific prohibitions and/or limits to implement the prohibitions and limits set forth in 40 CFR §§403.5 (a)(1), (b), (c)(1) and (3), and (d) is a condition of this permit. The specific prohibitions set out in 40 CFR §403.5(b) shall be enforced by the permittee unless modified under this provision.

3. The permittee shall prepare annually a list of IUs which during the preceding twelve (12) months were in significant noncompliance with applicable pretreatment requirements. For the purposes of this section of the permit, "CONTRIBUTING INDUSTRIES AND PRETREATMENT REQUIREMENTS", significant noncompliance (SNC) shall be determined based upon the more stringent of either criteria established at 40 CFR §403.8(f)(2)(vii) [rev. 7/24/90] or criteria established in the approved POTW pretreatment program. This list is to be published annually in **November** in the largest daily newspaper in the municipality in which the POTW is located.

   In addition, each **November** the permittee shall submit an updated pretreatment program status report to the TCEQ Storm Water & Pretreatment Team of the Water Quality Division containing the following information:

   a. An updated list of all SIUs. For each listed IU, the following information shall be included:

      (1) Standard Industrial Classification (SIC) code and categorical determination;

      (2) Control document status. Whether the user has an effective control document, and the date such document was last issued, reissued, or modified, (indicate which IUs were added to the system (or newly identified) within the previous 12 months);

      (3) A summary of all monitoring activities performed within the previous 12 months. The following information shall be reported:

         * Total number of inspections performed; and
         * Total number of sampling visits made.

      (4) Status of compliance with both effluent limitations and reporting requirements. Compliance status shall be defined as follows:

         * Compliant (C) - no violations during the previous 12 month period;

* Non-compliant (NC) - one or more violations during the previous 12 months but does not meet the criteria for significantly noncompliant IUs; and

* Significant Noncompliance (SNC) - in accordance with requirements described above in this section.

(5) For significantly noncompliant IUs, indicate the nature of the violations, the type and number of actions taken (notice of violation, administrative order, criminal or civil suit, fines or penalties collected, etc.) and current compliance status. If any IU was on a schedule to attain compliance with effluent limits, indicate the date the schedule was issued and the date compliance is to be attained.

b. A list of each SIU whose authorization to discharge was terminated or revoked during the preceding twelve (12) month period and the reason for termination.

c. A report on any interference, pass through, upset or POTW permit violations known or suspected to be caused by industrial contributors and response actions taken by the permittee.

d. A copy of the newspaper publication of the list of significantly noncompliant IUs giving the name of the newspaper and the date the list was published.

e. The information requested may be submitted in tabular form using the example tables provided.

4. The permittee shall provide adequate written notification to the Executive Director in care of the Wastewater Permitting Section (MC 148) of the Water Quality Division, within 30 days of the permittee's knowledge of the following:

a. Any new introduction of pollutants into the treatment works from an indirect discharger which would be subject to Sections 301 and 306 of the Clean Water Act if the indirect discharger was directly discharging those pollutants; and

b. Any substantial change in the volume or character of pollutants being introduced into the treatment works by a source introducing pollutants into the treatment works at the time of issuance of the permit.

Adequate notice shall include information on the quality and quantity of effluent to be introduced into the treatment works, and any anticipated impact of the change on the quality or quantity of effluent to be discharged from the POTW.

TPDES Pretreatment Program Annual Report Form
for Updated Significant Industrial Users List

Reporting month/year: _____, ____ to _____, ____

TPDES Permit No. _____ Permittee: _____ Treatment Plant: _____

PRETREATMENT PROGRAM STATUS REPORT UPDATED SIGNIFICANT INDUSTRIAL USERS LIST												
INDUSTRIAL USER	SIC CODE	CATEGORICAL DETERMINATION (include 40 CFR citation)	CONTROL DOCUMENT		NEW USER	TIMES INSPECTED	TIMES SAMPLED	COMPLIANCE STATUS				
			Y/N	LAST ACTION				REPORTS				EFFLUENT LIMITS
								BMR	90-DAY COMPLIANCE	SEMI-ANNUAL	SELF MONITORING	

TPDES Pretreatment Program Annual Report Form
for Industrial Inventory Modifications

Reporting month/year: _____, ____ to _____, ____

TPDES Permit No. _____ Permittee: _____ Treatment Plant: _____

INDUSTRIAL INVENTORY MODIFICATIONS					
FACILITY NAME, ADDRESS AND CONTACT PERSON	ADD, CHANGE, DELETE	IF DELETION:	IF ADDITION OR SIGNIFICANT CHANGE:		
		REASON FOR DELETION	PROCESS DESCRIPTION	POLLUTANTS	FLOW RATE

TPDES Pretreatment Program Annual Report Form
for Enforcement Actions Taken

Reporting month/year: _____, ____ to _____, ____

TPDES Permit No. _____ Permittee: _____ Treatment Plant: _____ Overall % SNC_____

SIGNIFICANTLY NONCOMPLIANT USERS - ENFORCEMENT ACTIONS TAKEN												
INDUSTRIAL USER	NATURE OF VIOLATION		NUMBER OF ACTIONS TAKEN					PENALTIES COLLECTED	COMPLIANCE SCHEDULE		CURRENT STATUS	COMMENTS
	REPORTS	LIMITS	NOV	A.O.	CIVIL	CRIMINAL	OTHER		DATE ISSUED	DATE DUE		

CHRONIC BIOMONITORING REQUIREMENTS: FRESHWATER

The provisions of this Section apply to Outfall 001 for whole effluent toxicity testing (biomonitoring).

1. Scope, Frequency and Methodology

a. The permittee shall test the effluent for toxicity in accordance with the provisions below. Such testing will determine if an appropriately dilute effluent sample adversely affects the survival, reproduction, or growth of the test organisms.

b. The permittee shall conduct he permittee shall conduct the following toxicity tests utilizing the test organisms, procedures and quality assurance requirements specified in this Part of the permit and in accordance with "Short-Term Methods for Estimating the Chronic Toxicity of Effluents and Receiving Waters to Freshwater Organisms, Fourth Edition" (EPA-821-R-02-013), or the most recent update:

1) Chronic static renewal survival and reproduction test using the water flea (*Ceriodaphnia dubia*) (Method 1002.0 or the most recent update). This test should be terminated when 60% of the surviving adults in the control produce three broods or at the end of eight days, whichever comes first. This test shall be conducted once per quarter.

2) Chronic static renewal 7-day larval survival and growth test using the fathead minnow (*Pimephales promelas*) (Method 1000.0 or the most recent update). A minimum of five replicates with eight organisms per replicate shall be used in the control and in each dilution. This test shall be conducted once per quarter.

The permittee must perform and report a valid test for each test species during the prescribed reporting period. An invalid test must be repeated during the same reporting period. An invalid test is herein defined as any test failing to satisfy the test acceptability criteria, procedures, and quality assurance requirements specified in the test methods and permit. All test results, valid or invalid, must be submitted as described below.

c. The permittee shall use five effluent dilution concentrations and a control in each toxicity test. These additional effluent concentrations are 30%, 40%, 53%, 71%, and 95% effluent. The critical dilution, defined as 95% effluent, is the effluent concentration representative of the proportion of effluent in the receiving water during critical low flow or critical mixing conditions.

d. This permit may be amended to require a Whole Effluent Toxicity (WET) limit, Chemical-Specific (CS) effluent limits, a Best Management Practice (BMP), additional toxicity testing, and/or other appropriate actions to address toxicity. The permittee may be required to conduct additional biomonitoring tests and/or a Toxicity Reduction Evaluation (TRE) if biomonitoring data indicate multiple numbers of unconfirmed toxicity events.

e. Testing Frequency Reduction

1) If none of the first four consecutive quarterly fathead minnow tests demonstrates significant lethal or sub-lethal effects, the permittee may submit this information in writing and, upon approval from the Water Quality Standards Team, reduce the testing frequency to once per year.

2) If one or more of the first four consecutive quarterly fathead minnow tests demonstrates significant sub-lethal effects, the permittee shall continue quarterly testing until four consecutive quarterly tests demonstrate no significant sub-lethal effects. At that time, the permittee may apply for the testing frequency reduction.

3) If one or more of the first four consecutive quarterly fathead minnow tests demonstrates significant lethal effects, the permittee shall continue quarterly testing until the permit is reissued. If a testing frequency reduction had been previously granted and a subsequent test demonstrates significant lethal effects, the permittee will resume the quarterly testing frequency until the permit is reissued.

2. Required Toxicity Testing Conditions

a. Test Acceptance - The permittee shall repeat any toxicity test, including the control and all effluent dilutions, which fail to meet the following criteria:

1) a control mean survival of 80% or greater;

2) a control mean number of water flea neonates per surviving adult of 15 or greater;

3) a control mean dry weight of surviving fathead minnow larvae of 0.25 mg or greater;

4) a control Coefficient of Variation percent (CV%) of 40 or less in between replicates for the young of surviving females in the water flea reproduction and survival test; and the growth and survival endpoints in the fathead minnow growth and survival test.

5) a critical dilution CV% of 40 or less for young of surviving females in the water flea reproduction and survival test; and the growth and survival endpoints for the fathead minnow growth and survival test. However, if statistically significant lethal or nonlethal effects are exhibited at the critical dilution, a CV% greater than 40 shall not invalidate the test.

6) a Percent Minimum Significant Difference of 47 or less for water flea reproduction;

7) a Percent Minimum Significant Difference of 30 or less for fathead minnow growth..

b. Statistical Interpretation

1) For the water flea survival test, the statistical analyses used to determine if there is a significant difference between the control and an effluent dilution shall be Fisher's Exact Test as described in the "Short-Term Methods for Estimating the Chronic Toxicity of Effluents and Receiving Waters to Freshwater Organisms, Fourth Edition" (EPA-821-R-02-013), or the most recent update thereof.

2) For the water flea reproduction test and the fathead minnow larval survival and growth tests, the statistical analyses used to determine if there is a significant difference between the control and an effluent dilution shall be in accordance with the methods described in the "Short-Term Methods for Estimating the Chronic Toxicity of Effluents and Receiving Waters to Freshwater Organisms, Fourth Edition" (EPA-821-R-02-013), or the most recent update thereof.

3) The permittee is responsible for reviewing test concentration-response relationships to ensure that calculated test-results are interpreted and reported correctly. The EPA manual, "Method Guidance and Recommendation for Whole Effluent Toxicity (WET) Testing (40 CFR Part 136)" (EPA 821-B-00-004) provides guidance on determining the validity of test results.

4) If significant lethality is demonstrated (that is, there is a statistically significant difference in survival at the critical dilution when compared to the control), the conditions of test acceptability are met, and the survival of the test organisms are equal to or greater than 80% in the critical dilution and all dilutions below that, then the permittee shall report a survival No Observed Effect Concentration (NOEC) of not less than the critical dilution for the reporting requirements.

5) The NOEC is defined as the greatest effluent dilution at which no significant effect is demonstrated. The Lowest Observed Effect Concentration (LOEC) is defined as the lowest effluent dilution at which a significant effect is demonstrated. A significant effect is herein defined as a statistically significant difference at the 95% confidence level between the survival, reproduction, or growth of the test organism(s) in a specified effluent dilution compared to the survival, reproduction, or growth of the test organism(s) in the control (0% effluent).

6) The use of NOECs and LOECs assumes either a monotonic (continuous) concentration-response relationship or a threshold model of the concentration-response relationship. For any test result that demonstrates a non-monotonic (non-continuous) response, the NOEC should be determined based on the guidance manual referenced in Item 3 above and a full report will be submitted to the Water Quality Standards Team

7) Pursuant to the responsibility assigned to the permittee in Part 2.b.3), test results that demonstrate a non-monotonic (non-continuous) concentration-response relationship may be submitted, prior to the due date, for technical review. The above-referenced guidance manual will be used when making a determination of test acceptability.

8) The Water Quality Standards Team will review test results (i.e., Table 1 and Table 2 forms) for consistency with established TCEQ rules, procedures, and permit requirements.

c. Dilution Water

1) Dilution water used in the toxicity tests shall be the receiving water collected at a point upstream of the discharge as close as possible to the discharge point, but unaffected by the discharge. Where the toxicity tests are conducted on effluent discharges to receiving waters that are classified as intermittent streams, or where the toxicity tests are conducted on effluent discharges where no receiving water is available due to zero flow conditions, the permittee shall; (a) substitute a synthetic dilution water that has a pH, hardness, and alkalinity similar to that of the closest downstream perennial water unaffected by the discharge, or (b) utilize the closest downstream perennial water unaffected by the discharge.

2) Where the receiving water proves unsatisfactory as a result of pre-existing instream toxicity (i.e. fails to fulfill the test acceptance criteria of item 2.a.), the permittee may substitute synthetic dilution water for the receiving water in all subsequent tests provided the unacceptable receiving water test met the following stipulations:

a) a synthetic lab water control was performed (in addition to the receiving water control) which fulfilled the test acceptance requirements of item 2.a;

b) the test indicating receiving water toxicity was carried out to completion (i.e., 7 days);

c) the permittee submitted all test results indicating receiving water toxicity with the reports and information required in Part 3 of this Section.

The synthetic dilution water shall have a pH, hardness, and alkalinity similar to that of the receiving water or a natural water in the drainage basin that is unaffected by the discharge, provided the magnitude of these parameters will not cause toxicity in a synthetic dilution water control that has been formulated to match the pH, hardness, and alkalinity naturally found in the receiving water. Upon approval, the permittee may substitute other appropriate dilution water with chemical and physical characteristics similar to that of the receiving water.

d. Samples and Composites

1) The permittee shall collect a minimum of three flow-weighted 24-hour composite samples from Outfall 001. The second and third 24-hour composite samples will be used for the renewal of the dilution concentrations for each toxicity test. A 24-hour composite sample consists of a minimum of 12 effluent portions collected at equal time intervals representative of a 24-hour operating day and combined proportionally to flow, or a sample continuously collected proportionally to flow over a 24-hour operating day.

2) The permittee shall collect the 24-hour composite samples such that the samples are representative of any periodic episode of chlorination, biocide usage, or other potentially toxic substance discharged on an intermittent basis.

3) The permittee shall initiate the toxicity tests within 36 hours after collection of the last portion of the first 24-hour composite sample. The holding time for any subsequent 24-hour composite sample shall not exceed 72 hours. Samples shall be maintained at a temperature of 0-6 degrees Centigrade during collection, shipping, and storage.

4) If Outfall 001 ceases discharging during the collection of effluent samples, the requirements for the minimum number of effluent samples, the minimum number of effluent portions, and the sample holding time, are waived during that sampling period. However, the permittee must have collected an effluent composite sample volume sufficient to complete the required toxicity tests with renewal of the effluent. When possible, the effluent samples used for the toxicity tests shall be collected on separate days if the discharge occurs over multiple days. The effluent composite sample collection duration and the static renewal protocol associated with the abbreviated sample collection must be documented in the full report.

5) The effluent samples shall not be dechlorinated after sample collection.

3. Reporting

All reports, tables, plans, summaries, and related correspondence required in any Part of this Section shall be submitted to the attention of the Water Quality Standards Team (MC 150) of the Water Quality Division. All DMRs, including DMRs with biomonitoring data, should be sent to the Water Quality Compliance Monitoring Team of the Enforcement Division (MC 224).

a. The permittee shall prepare a full report of the results of all tests conducted pursuant to this permit in accordance with the Report Preparation Section of "Short-Term Methods for Estimating the Chronic Toxicity of Effluents and Receiving Waters to Freshwater Organisms, Fourth Edition" (EPA-821-R-02-013), or the most recent update, for every valid and invalid toxicity test initiated whether carried to completion or not. All full reports shall be retained for 3 years at the plant site and shall be available for inspection by TCEQ personnel.

b. A full report must be submitted with the first valid biomonitoring test results for each test species and with the first test results any time the permittee subsequently employs a different test laboratory. Full reports need not be submitted for subsequent testing unless specifically requested. The permittee shall routinely report the results of each biomonitoring test on the Table 1 forms provided with this permit. All Table 1 reports must include the information specified in the Table 1 form attached to this permit.

1) Annual biomonitoring test results are due on or before January 20th for biomonitoring conducted during the previous 12 month period.

2) Semiannual biomonitoring test results are due on or before July 20th and January 20th for biomonitoring conducted during the previous 6 month period.

3) Quarterly biomonitoring test results are due on or before April 20th, July 20th, October 20th, and January 20th, for biomonitoring conducted during the previous calendar quarter.

4) Monthly biomonitoring test results are due on or before the 20th day of the month following sampling.

c. Enter the following codes on the DMR for the appropriate parameters for valid tests only:

1) For the water flea, Parameter TLP3B, enter a "1" if the NOEC for survival is less than the critical dilution; otherwise, enter a "0."

2) For the water flea, Parameter TOP3B, report the NOEC for survival.

3) For the water flea, Parameter TXP3B, report the LOEC for survival.

4) For the water flea, Parameter TWP3B, enter a "1" if the NOEC for reproduction is less than the critical dilution; otherwise, enter a "0."

5) For the water flea, Parameter TPP3B, report the NOEC for reproduction.

6) For the water flea, Parameter TYP3B, report the LOEC for reproduction.

7) For the fathead minnow, Parameter TLP6C,enter a "1" if the NOEC for survival is less than the critical dilution; otherwise, enter a "0."

8) For the fathead minnow, Parameter TOP6C, report the NOEC for survival.

9) For the fathead minnow, Parameter TXP6C, report the LOEC for survival.

10) For the fathead minnow, Parameter TWP6C,enter a "1" if the NOEC for growth is less than the critical dilution; otherwise, enter a "0."

11) For the fathead minnow, Parameter TPP6C, report the NOEC for growth.

12) For the fathead minnow, Parameter TYP6C, report the LOEC for growth

d. Enter the following codes on the DMR for retests only:

1) For retest number 1, Parameter 22415, enter a "1" if the NOEC for survival is less than the critical dilution; otherwise, enter a "0."

2) For retest number 2, Parameter 22416, enter a "1" if the NOEC for survival is less than the critical dilution; otherwise, enter a "0."

4. Persistent Toxicity

The requirements of this Part apply only when a test demonstrates a significant effect at the critical dilution. A significant effect is defined as a statistically significant difference, at the 95% confidence level, between a specified endpoint (survival, growth, or reproduction) of the test organism in a specified effluent dilution when compared to the specified endpoint of the test organism in the control. Significant lethality is defined as a statistically significant difference in survival at the critical dilution when compared to the survival of the test organism in the control. Significant sublethality is defined as a statistically significant difference in growth/reproduction at the critical dilution when compared to the growth/reproduction of the test organism in the control.

a. The permittee shall conduct a total of 2 additional tests (retests) for any species that demonstrates a significant effect (lethal or sublethal) at the critical dilution. The two retests shall be conducted monthly during the next two consecutive months. The permittee shall not substitute either of the two retests in lieu of routine toxicity testing. All reports shall be submitted within 20 days of test completion. Test completion is defined as the last day of the test. The retests shall also be reported on the DMRs as specified in Part 3.d.

b. If the retests are performed due to a demonstration of significant lethality, and one or both of the two retests specified in item 4.a. demonstrates significant lethality, the permittee shall initiate the TRE requirements as specified in Part 5. The provisions of item 4.a. are suspended upon completion of the two retests and submittal of the TRE Action Plan and Schedule defined in Part 5.

If neither test demonstrates significant lethality and the permittee is testing under the reduced testing frequency provision of Part 1.e., the permittee shall return to a quarterly testing frequency for that species.

c. If the two retests are performed due to a demonstration of significant sublethality, and one or both of the two retests specified in item 4.a. demonstrates significant lethality, the permittee shall again perform two retests as stipulated in item 4.a.

d. If the two retests are performed due to a demonstration of significant sublethality, and both retests pass, the permittee shall continue testing at the quarterly frequency until such time that the permittee can invoke the reduced testing frequency provision specified in Part 1.e.

e. Regardless of whether retesting for lethal or sublethal effects, or a combination of the two, no more than one retest per month is required for a species.

5. Toxicity Reduction Evaluation

a. Within 45 days of the last test day of the retest that demonstrates significant lethality, the permittee shall submit a General Outline for initiating a TRE. The outline shall include, but not be limited to, a description of project personnel, a schedule for obtaining consultants (if needed), a discussion of influent and/or effluent data available for review, a sampling and analytical schedule, and a proposed TRE initiation date.

b. Within 90 days of the last test day of the retest that demonstrates significant lethality, the permittee shall submit a TRE Action Plan and Schedule for conducting a TRE. The plan shall specify the approach and methodology to be used in performing the TRE. A Toxicity Reduction Evaluation is a step-wise investigation combining toxicity testing with physical and chemical analysis to determine actions necessary to eliminate or reduce effluent toxicity to a level not effecting significant lethality at the critical dilution. The TRE Action Plan shall lead to the successful elimination of significant lethal effects at the critical dilution for both test species defined in item 1.b. As a minimum, the TRE Action Plan shall include the following:

1) Specific Activities - The TRE Action Plan shall specify the approach the permittee intends to utilize in conducting the TRE, including toxicity characterizations, identifications, confirmations, source evaluations, treatability studies, and/or alternative approaches. When conducting characterization analyses, the permittee shall perform multiple characterizations and follow the procedures specified in the document entitled, "Toxicity Identification Evaluation: Characterization of Chronically Toxic Effluents, Phase I" (EPA/600/6-91/005F), or alternate procedures. The permittee shall perform multiple identifications and follow the methods specified in the documents entitled, "Methods for Aquatic Toxicity Identification Evaluations, Phase II Toxicity Identification Procedures for Samples Exhibiting Acute and Chronic Toxicity" (EPA/60-0/R-92/080) and "Methods for Aquatic Toxicity Identification Evaluations, Phase III Toxicity Confirmation Procedures for Samples Exhibiting Acute and Chronic Toxicity" (EPA/600/R-92/081). All characterization, identification, and confirmation tests shall be conducted in an orderly and logical progression;

2) Sampling Plan - The TRE Action Plan should describe sampling locations, methods, holding times, chain of custody, and preservation techniques. The effluent sample volume collected for all tests shall be adequate to perform the toxicity characterization/ identification/ confirmation procedures, and chemical-specific analyses when the toxicity tests show significant lethality. Where the permittee has identified or suspects specific pollutant(s) and/or source(s) of effluent toxicity, the permittee shall conduct, concurrent with toxicity testing, chemical-specific analyses for the identified and/or suspected pollutant(s) and/or source(s) of effluent toxicity;

3) Quality Assurance Plan - The TRE Action Plan should address record keeping and data evaluation, calibration and standardization, baseline tests, system blanks, controls, duplicates, spikes, toxicity persistence in the samples, randomization, reference toxicant control charts, as well as mechanisms to detect artifactual toxicity; and

4) Project Organization - The TRE Action Plan should describe the project staff, project manager, consulting engineering services (where applicable), consulting analytical and toxicological services, etc.

c. Within 30 days of submittal of the TRE Action Plan and Schedule, the permittee shall implement the TRE with due diligence.

d. The permittee shall submit quarterly TRE Activities Reports concerning the progress of the TRE. The quarterly reports are due on or before April 20th, July 20th, October 20th, and January 20th. The report shall detail information regarding the TRE activities including:

1) results and interpretation of any chemical-specific analyses for the identified and/or suspected pollutant(s) performed during the quarter;

2) results and interpretation of any characterization, identification, and confirmation tests performed during the quarter;

3) any data and/or substantiating documentation which identifies the pollutant(s) and/or source(s) of effluent toxicity;

4) results of any studies/evaluations concerning the treatability of the facility's effluent toxicity;

5) any data which identifies effluent toxicity control mechanisms that will reduce effluent toxicity to the level necessary to meet no significant lethality at the critical dilution; and

6) any changes to the initial TRE Plan and Schedule that are believed necessary as a result of the TRE findings.

Copies of the TRE Activities Report shall also be submitted to the U.S. EPA Region 6 office.

e. During the TRE, the permittee shall perform, at a minimum, quarterly testing using the more sensitive species; testing for the less sensitive species shall continue at the frequency specified in Part 1.b.

f. If the effluent ceases to effect significant lethality (herein as defined below) the permittee may end the TRE. A "cessation of lethality" is defined as no significant lethality for a period of 12 consecutive months with at least monthly testing. At the end of the 12 months, the permittee shall submit a statement of intent to cease the TRE and may then resume the testing frequency specified in Part 1.b. The permittee may only apply the "cessation of lethality" provision once.

This provision accommodate situations where operational errors and upsets, spills, or sampling errors triggered the TRE, in contrast to a situation where a single toxicant or group of toxicants cause lethality. This provision does not apply as a result of corrective actions taken by the permittee. "Corrective actions" are herein defined as proactive efforts which eliminate or reduce effluent toxicity. These include, but are not limited to, source reduction or elimination, improved housekeeping, changes in chemical usage, and modifications of influent streams and/or effluent treatment.

The permittee may only apply this cessation of lethality provision once. If the effluent again demonstrates significant lethality to the same species, the permit will be amended to add a WET limit with a compliance period, if appropriate. However, prior to the effective date of the WET limit, the permittee may apply for a permit amendment removing and replacing the WET limit with an alternate toxicity control measure by identifying and confirming the toxicant and/or an appropriate control measure.

g. The permittee shall complete the TRE and submit a Final Report on the TRE Activities no later than 28 months from the last test day of the retest that confirmed significant lethal effects at the critical dilution. The permittee may petition the Executive Director (in writing) for an extension of the 28-month limit. However, to warrant an extension the permittee must have demonstrated due diligence in their pursuit of the TIE/TRE and must prove that circumstances beyond their control stalled the TIE/TRE. The report shall provide information pertaining to the specific control mechanism(s) selected that will, when implemented, result in reduction of effluent toxicity to no significant lethality at the critical dilution. The report will also provide a specific corrective action schedule for implementing the selected control mechanism(s). A copy of the TRE Final Report shall also be submitted to the U.S. EPA Region 6 office.

h. Based upon the results of the TRE and proposed corrective actions, this permit may be amended to modify the biomonitoring requirements, where necessary, to require a compliance schedule for implementation of corrective actions, to specify a WET limit, to specify a BMP, and/or to specify CS limits.

TABLE 1 (SHEET 1 OF 4)

BIOMONITORING REPORTING

CERIODAPHNIA DUBIA SURVIVAL AND REPRODUCTION

		Date Time		Date Time
Dates and Times Composites Collected	No. 1	FROM: _____	TO:	_____
	No. 2	FROM: _____	TO:	_____
	No. 3	FROM: _____	TO:	_____

Test initiated: _____ am/pm _____ date

Dilution water used: _____ Receiving water _____ Synthetic Dilution water

NUMBER OF YOUNG PRODUCED PER ADULT AT END OF TEST

	Percent effluent (%)					
REP	0%	30%	40%	53%	71%	95%
A						
B						
C						
D						
E						
F						
G						
H						
I						
J						
Surviv. Mean						
Total Mean						
CV%*						
PMSD						

*coefficient of variation = standard deviation x 100/mean (calculation based on young of the surviving adults)
Designate males (M), and dead females (D), along with number of neonates (x) released prior to death.

TABLE 1 (SHEET 2 OF 4)

CERIODAPHNIA DUBIA SURVIVAL AND REPRODUCTION TEST

1. Dunnett's Procedure or Steel's Many-One Rank Test or Wilcoxon Rank Sum Test (with Bonferroni adjustment) or t-test (with Bonferroni adjustment) as appropriate:

   Is the mean number of young produced per adult significantly less (p=0.05) than the number of young per adult in the control for the % effluent corresponding to significant nonlethal effects?

   CRITICAL DILUTION (95%): _____ YES _____ NO

PERCENT SURVIVAL

	Percent effluent (%)					
Time of Reading	0%	30%	40%	53%	71%	95%
24h						
48h						
End of Test						

2. Fisher's Exact Test:

   Is the mean survival at test end significantly less (p=0.05) than the control survival for the % effluent corresponding to lethality?

   CRITICAL DILUTION (95%): _____ YES _____ NO

3. Enter percent effluent corresponding to each NOEC\LOEC below:

   a.) NOEC survival = _____% effluent

   b.) LOEC survival = _____% effluent

   c.) NOEC reproduction = _____% effluent

   d.) LOEC reproduction = _____% effluent

TABLE 1 (SHEET 3 OF 4)

BIOMONITORING REPORTING

FATHEAD MINNOW LARVAE GROWTH AND SURVIVAL

		Date Time		Date Time
Dates and Times Composites Collected	No. 1	FROM:_____	TO:	_____
	No. 2	FROM:_____	TO:	_____
	No. 3	FROM:_____	TO:	_____

Test initiated:_____am/pm _____date

Dilution water used: _____ Receiving water _____ Synthetic Dilution water

FATHEAD MINNOW GROWTH DATA

Effluent Concentration (%)	Average Dry Weight in milligrams in replicate chambers					Mean Dry Weight	CV%*
	A	B	C	D	E		
0%							
30%							
40%							
53%							
71%							
95%							
PMSD							

* coefficient of variation = standard deviation x 100/mean

1. Dunnett's Procedure or Steel's Many-One Rank Test or Wilcoxon Rank Sum Test (with Bonferroni adjustment) or t-test (with Bonferroni adjustment) as appropriate:

   Is the mean dry weight (growth) at 7 days significantly less (p=0.05) than the control's dry weight (growth) for the % effluent corresponding to significant nonlethal effects?

   CRITICAL DILUTION (95%): _____ YES _____ NO

TABLE 1 (SHEET 4 OF 4)

BIOMONITORING REPORTING
FATHEAD MINNOW GROWTH AND SURVIVAL TEST

FATHEAD MINNOW SURVIVAL DATA

Effluent Concentration (%)	Percent Survival in replicate chambers					Mean percent survival			CV%*
	A	B	C	D	E	24h	48h	7 day	
0%									
30%									
40%									
53%									
71%									
95%									

* coefficient of variation = standard deviation x 100/mean

2. Dunnett's Procedure or Steel's Many-One Rank Test or Wilcoxon Rank Sum Test (with Bonferroni adjustment) or t-test (with Bonferroni adjustment) as appropriate:

   Is the mean survival at 7 days significantly less (p=0.05) than the control survival for the % effluent corresponding to lethality?

   CRITICAL DILUTION (95%): _____ YES _____ NO

3. Enter percent effluent corresponding to each NOEC\LOEC below:

   a.) NOEC survival = _____% effluent

   b.) LOEC survival = _____% effluent

   c.) NOEC growth = _____% effluent

   d.) LOEC growth = _____% effluent

24-HOUR ACUTE BIOMONITORING REQUIREMENTS: FRESHWATER

The provisions of this section apply to Outfall 001 for whole effluent toxicity testing (biomonitoring)

1. Scope, Frequency and Methodology

   a. The permittee shall test the effluent for lethality in accordance with the provisions in this Section. Such testing will determine compliance with the Surface Water Quality Standard, 30 TAC §307.6(e)(2)(B), of greater than 50% survival of the appropriate test organisms in 100% effluent for a 24-hour period.

   b. The toxicity tests specified shall be conducted once per six months. The permittee shall conduct the following toxicity tests utilizing the test organisms, procedures, and quality assurance requirements specified in this section of the permit and in accordance with "Methods for Measuring the Acute Toxicity of Effluents and Receiving Waters to Freshwater and Marine Organisms, Fifth Edition" (EPA-821-R-02-012), or the most recent update thereof:

      1) Acute 24-hour static toxicity test using the water flea (*Daphnia pulex* or *Ceriodaphnia dubia*). A minimum of five replicates with eight organisms per replicate shall be used in the control and in each dilution.

      2) Acute 24-hour static toxicity test using the fathead minnow (*Pimephales promelas*). A minimum of five replicates with eight organisms per replicate shall be used in the control and in each dilution.

      A valid test result must be submitted for each reporting period. The permittee must report, then repeat, an invalid test during the same reporting period. The repeat test shall include the control and the 100% effluent dilution and use the appropriate number of organisms and replicates, as specified above. An invalid test is herein defined as any test failing to satisfy the test acceptability criteria, procedures, and quality assurance requirements specified in the test methods and permit.

   c. In addition to an appropriate control, a 100% effluent concentration shall be used in the toxicity tests. The control and/or dilution water shall consist of a standard, synthetic, moderately hard, reconstituted water.

   d. This permit may be amended to require a Whole Effluent Toxicity (WET) limit, a Best Management Practice (BMP), Chemical-Specific (CS) limits, additional toxicity testing, and/or other appropriate actions to address toxicity. The permittee may be required to conduct additional biomonitoring tests and/or a Toxicity Reduction Evaluation (TRE) if biomonitoring data indicate multiple numbers of unconfirmed toxicity events.

2. Required Toxicity Testing Conditions

   a. Test Acceptance - The permittee shall repeat any toxicity test, including the control, if the control fails to meet a mean survival equal to or greater than 90%.

   b. Dilution Water - In accordance with item 1.c., the control and/or dilution water shall consist of a standard, synthetic, moderately hard, reconstituted water.

c. Samples and Composites

1) The permittee shall collect one flow-weighted 24-hour composite sample from Outfall 001. A 24-hour composite sample consists of a minimum of 12 effluent portions collected at equal time intervals representative of a 24-hour operating day and combined proportional to flow, or a sample continuously collected proportional to flow over a 24-hour operating day.

2) The permittee shall collect the 24-hour composite samples such that the samples are representative of any periodic episode of chlorination, biocide usage, or other potentially toxic substance discharged on an intermittent basis.

3) The permittee shall initiate the toxicity tests within 36 hours after collection of the last portion of the 24-hour composite sample. Samples shall be maintained at a temperature of 0-6 degrees Centigrade during collection, shipping, and storage.

4) If Outfall 001 ceases discharging during the collection of the effluent composite sample, the requirements for the minimum number of effluent portions are waived. However, the permittee must have collected a composite sample volume sufficient for completion of the required test. The abbreviated sample collection, duration, and methodology must be documented in the full report required in Part 3 of this Section.

5) The effluent samples shall not be dechlorinated after sample collection.

3. Reporting

All reports, tables, plans, summaries, and related correspondence required in any Part of this Section shall be submitted to the attention of the Water Quality Standards Team (MC 150) of the Water Quality Division. All DMRs, including DMRs with biomonitoring data, should be sent to the Water Quality Compliance Monitoring Team of the Enforcement Division (MC 224).

a. The permittee shall prepare a full report of the results of all tests conducted pursuant to this permit in accordance with the Report Preparation Section of "Methods for Measuring the Acute Toxicity of Effluents and Receiving Waters to Freshwater and Marine Organisms, Fifth Edition" (EPA-821-R-02-012), or the most recent update thereof, for every valid and invalid toxicity test initiated. All full reports shall be retained for 3 years at the plant site and shall be available for inspection by TCEQ personnel.

b. A full report must be submitted with the first valid biomonitoring test results for each test species and with the first test results any time the permittee subsequently employs a different test laboratory. Full reports need not be submitted for subsequent testing unless specifically requested. The permittee shall routinely report the results of each biomonitoring test on the Table 2 forms provided with this permit. All Table 2 reports must include the information specified in the Table 2 form attached to this permit.

1) Semiannual biomonitoring test results are due on or before January 20th and July 20th for biomonitoring conducted during the previous 6 month period.

2) Quarterly biomonitoring test results are due on or before January 20th, April 20th, July 20th, and October 20th, for biomonitoring conducted during the previous calendar quarter.

c. Enter the following codes on the DMR for the appropriate parameters for valid tests only:

1) For the water flea, Parameter TIE3D, enter a "0" if the mean survival at 24-hours is greater than 50% in the 100% effluent dilution; if the mean survival is less than or equal to 50%, enter a "1."

2) For the fathead minnow, Parameter TIE6C, enter a "0" if the mean survival at 24-hours is greater than 50% in the 100% effluent dilution; if the mean survival is less than or equal to 50%, enter a "1."

d. Enter the following codes on the DMR for retests only:

1) For retest number 1, Parameter 22415, enter a "0" if the mean survival at 24-hours is greater than 50% in the 100% effluent dilution; if the mean survival is less than or equal to 50%, enter a "1."

2) For retest number 2, Parameter 22416, enter a "0" if the mean survival at 24-hours is greater than 50% in the 100% effluent dilution; if the mean survival is less than or equal to 50%, enter a "1."

4. Persistent Mortality

The requirements of this Part apply when a toxicity test demonstrates significant lethality, here defined as a mean mortality of 50% or greater to organisms exposed to the 100% effluent concentration after 24-hours.

a. The permittee shall conduct 2 additional tests (retests) for each species that demonstrates significant lethality. The two retests shall be conducted once per week for 2 weeks. Five effluent dilution concentrations in addition to an appropriate control shall be used in the retests. These additional effluent concentrations are 6%, 13%, 25%, 50% and 100% effluent. The first retest shall be conducted within 15 days of the laboratory determination of significant lethality. All test results shall be submitted within 20 days of test completion of the second retest. Test completion is defined as the 24th hour. The retests shall also be reported on the DMRs as specified in Part 3.d.

b. If one or both of the two retests specified in item 4.a. demonstrates significant lethality, the permittee shall initiate the TRE requirements as specified in Part 5 of this Section.

5. Toxicity Reduction Evaluation

a. Within 45 days of the retest that demonstrates significant lethality, the permittee shall submit a General Outline for initiating a TRE. The outline shall include, but not be limited to, a description of project personnel, a schedule for obtaining consultants (if needed), a discussion of influent and/or effluent data available for review, a sampling and analytical schedule, and a proposed TRE initiation date.

b. Within 90 days of the retest that demonstrates significant lethality, the permittee shall submit a TRE Action Plan and Schedule for conducting a TRE. The plan shall specify the approach and methodology to be used in performing the TRE. A Toxicity Reduction Evaluation is a step-wise investigation combining toxicity testing with physical and chemical analysis to determine actions necessary to eliminate or reduce effluent toxicity to a level not effecting significant lethality at the critical dilution. The TRE Action Plan shall lead to the successful elimination of significant lethality for both test species defined in item 1.b. As a minimum, the TRE Action Plan shall include the following:

1) Specific Activities - The TRE Action Plan shall specify the approach the permittee intends to utilize in conducting the TRE, including toxicity characterizations, identifications, confirmations, source evaluations, treatability studies, and/or alternative approaches. When conducting characterization analyses, the permittee shall perform multiple characterizations and follow the procedures specified in the document entitled, "Methods for Aquatic Toxicity Identification Evaluations: Phase I Toxicity Characterization Procedures" (EPA/600/6-91/003), or alternate procedures. The permittee shall perform multiple identifications and follow the methods specified in the documents entitled, "Methods for Aquatic Toxicity Identification Evaluations, Phase II Toxicity Identification Procedures for Samples Exhibiting Acute and Chronic Toxicity" (EPA/600/R-92/080) and "Methods for Aquatic Toxicity Identification Evaluations, Phase III Toxicity Confirmation Procedures for Samples Exhibiting Acute and Chronic Toxicity" (EPA/600/R-92/081). All characterization, identification, and confirmation tests shall be conducted in an orderly and logical progression;

2) Sampling Plan - The TRE Action Plan should describe sampling locations, methods, holding times, chain of custody, and preservation techniques. The effluent sample volume collected for all tests shall be adequate to perform the toxicity characterization/ identification/ confirmation procedures, and chemical-specific analyses when the toxicity tests show significant lethality. Where the permittee has identified or suspects specific pollutant(s) and/or source(s) of effluent toxicity, the permittee shall conduct, concurrent with toxicity testing, chemical-specific analyses for the identified and/or suspected pollutant(s) and/or source(s) of effluent toxicity;

3) Quality Assurance Plan - The TRE Action Plan should address record keeping and data evaluation, calibration and standardization, baseline tests, system blanks, controls, duplicates, spikes, toxicity persistence in the samples, randomization, reference toxicant control charts, as well as mechanisms to detect artifactual toxicity; and

4) Project Organization - The TRE Action Plan should describe the project staff, project manager, consulting engineering services (where applicable), consulting analytical and toxicological services, etc.

c. Within 30 days of submittal of the TRE Action Plan and Schedule, the permittee shall implement the TRE with due diligence.

d. The permittee shall submit quarterly TRE Activities Reports concerning the progress of the TRE. The quarterly TRE Activities Reports are due on or before April 20th, July 20th, October 20th, and January 20th. The report shall detail information regarding the TRE activities including:

1) results and interpretation of any chemical-specific analyses for the identified and/or suspected pollutant(s) performed during the quarter;

2) results and interpretation of any characterization, identification, and confirmation tests performed during the quarter;

3) any data and/or substantiating documentation which identifies the pollutant(s) and/or source(s) of effluent toxicity;

4) results of any studies/evaluations concerning the treatability of the facility's effluent toxicity;

5) any data which identifies effluent toxicity control mechanisms that will reduce effluent toxicity to the level necessary to eliminate significant lethality; and

6) any changes to the initial TRE Plan and Schedule that are believed necessary as a result of the TRE findings.

Copies of the TRE Activities Report shall also be submitted to the U.S. EPA Region 6 office.

e. During the TRE, the permittee shall perform, at a minimum, quarterly testing using the more sensitive species; testing for the less sensitive species shall continue at the frequency specified in Part 1.b.

f. If the effluent ceases to effect significant lethality (herein as defined below) the permittee may end the TRE. A "cessation of lethality" is defined as no significant lethality for a period of 12 consecutive weeks with at least weekly testing. At the end of the 12 weeks, the permittee shall submit a statement of intent to cease the TRE and may then resume the testing frequency specified in Part 1.b. The permittee may only apply the "cessation of lethality" provision once.

This provision accommodate situations where operational errors and upsets, spills, or sampling errors triggered the TRE, in contrast to a situation where a single toxicant or group of toxicants cause lethality. This provision does not apply as a result of corrective actions taken by the permittee. "Corrective actions" are herein defined as proactive efforts which eliminate or reduce effluent toxicity. These include, but are not limited to, source reduction or elimination, improved housekeeping, changes in chemical usage, and modifications of influent streams and/or effluent treatment.

The permittee may only apply this cessation of lethality provision once. If the effluent again demonstrates significant lethality to the same species, the permit will be amended to add a WET limit with a compliance period, if appropriate. However, prior to the effective date of the WET limit, the permittee may apply for a permit amendment removing and replacing the WET limit with an alternate toxicity control measure by identifying and confirming the toxicant and/or an appropriate control measure.

g. The permittee shall complete the TRE and submit a Final Report on the TRE Activities no later than 18 months from the last test day of the retest that demonstrates significant lethality. The permittee may petition the Executive Director (in writing) for an extension of the 18-month limit. However, to warrant an extension the permittee must have demonstrated due diligence in their pursuit of the TIE/TRE and must prove that circumstances beyond their control stalled the TIE/TRE. The report shall specify the control mechanism(s) that will, when implemented, reduce effluent toxicity as specified in item 5.g. The report will also specify a corrective action schedule for implementing the selected control mechanism(s). A copy of the TRE Final Report shall also be submitted to the U.S. EPA Region 6 office.

h. Within 3 years of the last day of the test confirming toxicity, the permittee shall comply with 30 TAC 307.6.(e)(2)(B), which requires greater than 50% survival of the test organism in 100% effluent at the end of 24-hours. The permittee may petition the Executive Director (in writing) for an extension of the 3-year limit. However, to warrant an extension the permittee must have demonstrated due diligence in their pursuit of the TIE/TRE and must prove that circumstances beyond their control stalled the TIE/TRE.

The requirement to comply with 30 TAC 307.6.(e)(2)(B) may be exempted upon proof that toxicity is caused by an excess, imbalance, or deficiency of dissolved salts. This exemption excludes instances where individually toxic components (e.g. metals) form a salt compound. Following the exemption, the permit may be amended to include an ion-adjustment protocol, alternate species testing, or single species testing.

i. Based upon the results of the TRE and proposed corrective actions, this permit may be amended to modify the biomonitoring requirements where necessary, to require a compliance schedule for implementation of corrective actions, to specify a WET limit, to specify a BMP, and/or to specify a CS limit.

TABLE 2 (SHEET 1 OF 2)

WATER FLEA SURVIVAL

GENERAL INFORMATION

	Time (am/pm)	Date
Composite Sample Collected		
Test Initiated		

PERCENT SURVIVAL

Time	Rep	Percent effluent (%)					
		0%	6%	13%	25%	50%	100%
24h	A						
	B						
	C						
	D						
	E						
	MEAN						

Enter percent effluent corresponding to the LC50 below:

24 hour LC50 = _____% effluent

95% confidence limits: _____

Method of LC50 calculation:_____

TABLE 2 (SHEET 2 OF 2)

FATHEAD MINNOW SURVIVAL

GENERAL INFORMATION

	Time (am/pm)	Date
Composite Sample Collected		
Test Initiated		

PERCENT SURVIVAL

Time	Rep	Percent effluent (%)					
		0%	6%	13%	25%	50%	100%
24h	A						
	B						
	C						
	D						
	E						
	MEAN						

Enter percent effluent corresponding to the LC50 below:

24 hour LC50 = _____% effluent

95% confidence limits: _____

Method of LC50 calculation:_____

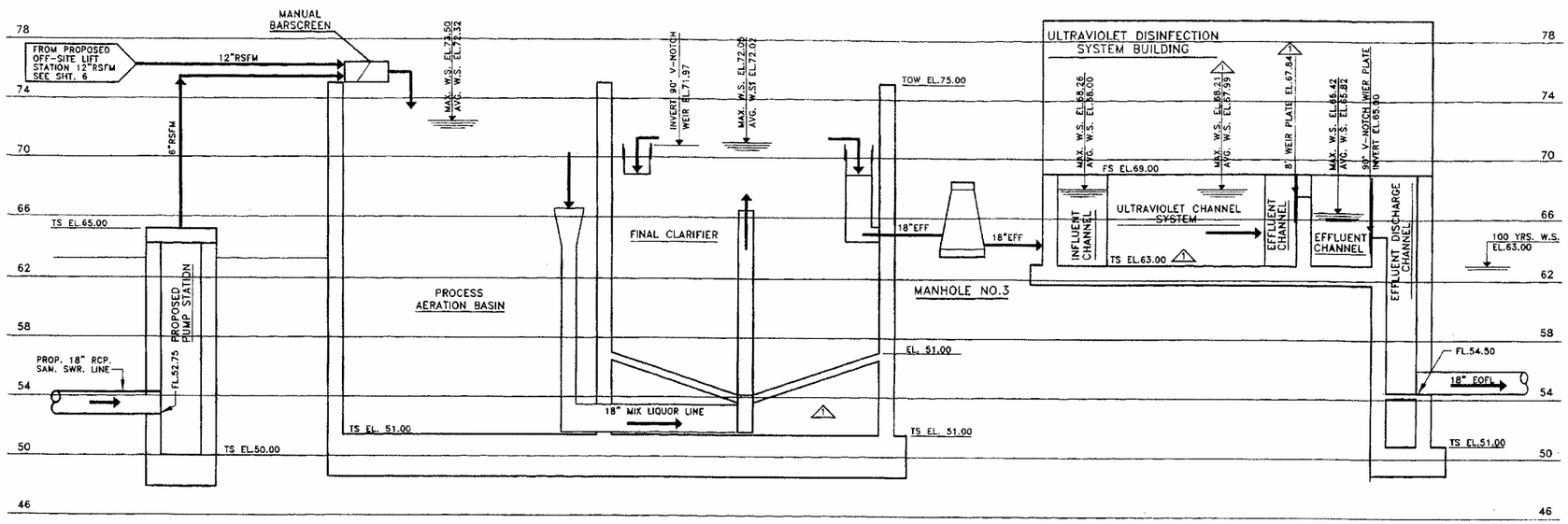

HYDRAULIC PROFILE

LEGEND:

AHSL	AIR HEADER SUPPLY LINE
ALP	AIRLIFT PUMP
ARAS	AUXILIARY RETURN ACTIVATED SLUDGE LINE
ARASALP	AUXILIARY RETURN ACTIVATED SLUDGE AIRLIFT PUMP
ASL	AIR SUPPLY LINE
BF	BUTTERFLY VALVE
CB	CENTRIFUGAL BLOWER
COMP	CORRUGATED GALVANIZED METAL PIPE
DWSL	DIGESTED WASTE SLUDGE LINE
DWSP	DIGESTED WASTE SLUDGE PUMP
DWSS	DIGESTED WASTE SLUDGE SUCTION LINE
EFF	EFFLUENT LINE
EOFL	EFFLUENT OVERFLOW LINE
FL	FLOW LINE ELEVATION
INF	GALV. STL. INLET BAFFLE
ML	MIXED LIQUOR LINE
PV	PLUG VALVE
RASALP	RETURN ACTIVATED SLUDGE AIRLIFT PUMP
RSFM	RAW SEWAGE FORCE MAIN
SALP	SCUM AIRLIFT PUMP
SCL	SCUM LINE
SNL	SUPERNATANT LINE
ST	GALV. STL. SHEAR TUBE W/MS DIFFUSER
TD	THICKENER DRIVE
TSCALP	THICKENER SCUM AIRLIFT PUMP
TWASALP	THICKENED WASTE SLUDGE AIRLIFT PUMP
WFB	WEDGEWATER FILTER BED
RAS	RETURN ACTIVATE SLUDGE LINE
WAS	WASTE SLUDGE LINE
→	DIRECTION OF FLOW ARROW

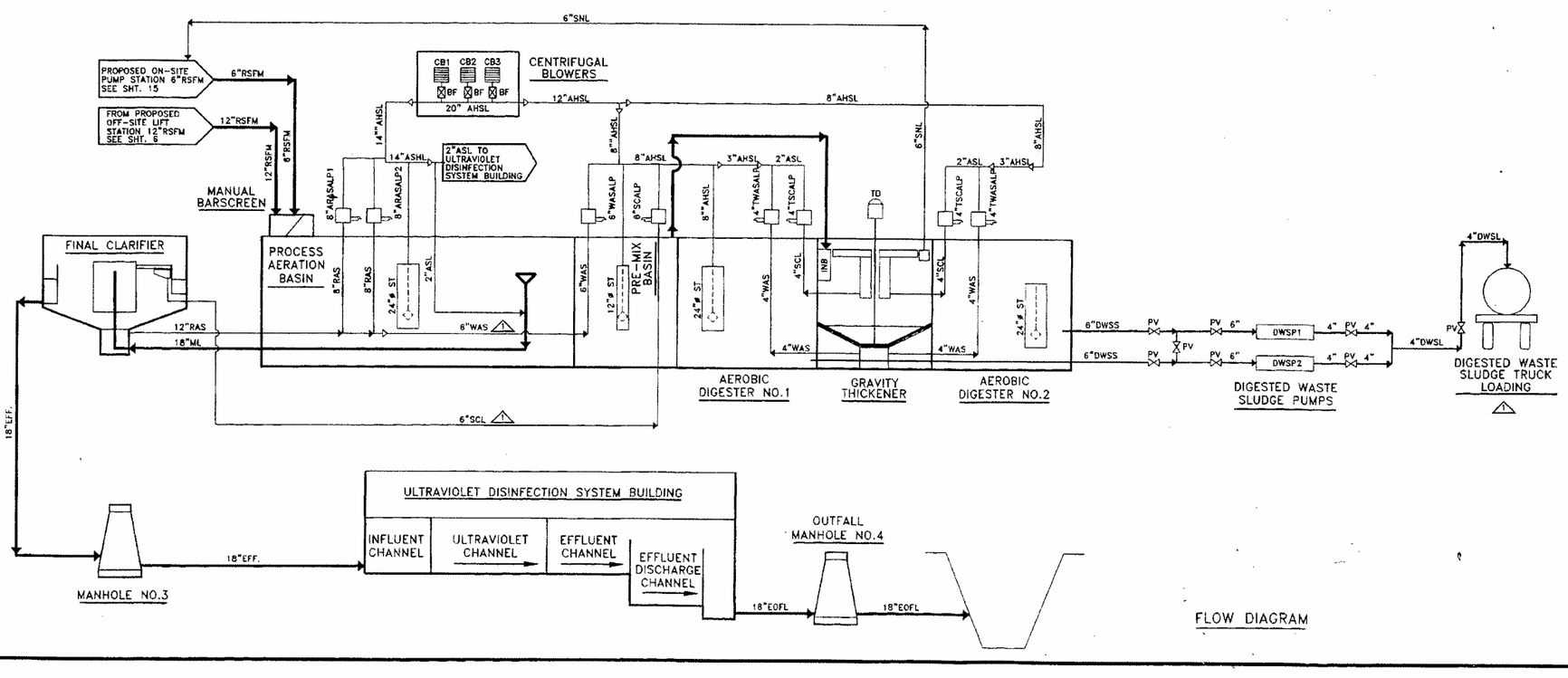

FLOW DIAGRAM

NO.	DATE	REVISION	APPROV
1	3/12/97	C.O. NO.1	DLS

STATE OF TEXAS — D.L. SHERWOOD — 28005 — REGISTERED ENGINEER — 5/22/97

georgia a. wilson & associates inc.
Consulting Engineers & Planners
5718 Westheimer, Suite 1000 Houston, Texas (713) 787-6070

FOREST COVE MUD
CONSTRUCTION OF NEW 0.95 MGD
WASTEWATER TREATMENT PLANT

FLOW DIAGRAM
AND
HYDRAULIC PROFILE

CITY OF HOUSTON
DEPARTMENT OF PUBLIC WORKS AND ENGINEERING
ENGINEERING, CONSTRUCTION AND REAL ESTATE GROUP

SECTION APPROVALS

WATER ENGINEERING — TRAFFIC AND SIGNAL ENGINEERING
WASTEWATER ENGINEERING 5/6/97 — STREET & BRIDGE ENGINEERING
STORM SEWER ENGINEERING — CONSTRUCTION 5/8/97

OTHER DEPARTMENTS

PLANNING & DEVELOPMENT — SPONSOR DEPARTMENT
CITY ENGINEER — DATE: 5/15/97
DIRECTOR OF PUBLIC WORKS AND ENGINEERING — DATE: 5-23-97

SUBMITTED:
SCALE: NTS
DATE: JULY, 1996
SURVEY BY:
F.B. NO.

DESIGNED BY: MM
DRAWN: AR
SHEET NO. 12 OF 62 SHEETS
CITY DWG. NO.: 33942

FC\FDHP4812

KINGWOOD CENTRAL WWTP (EXISTING/ INTERIM I)

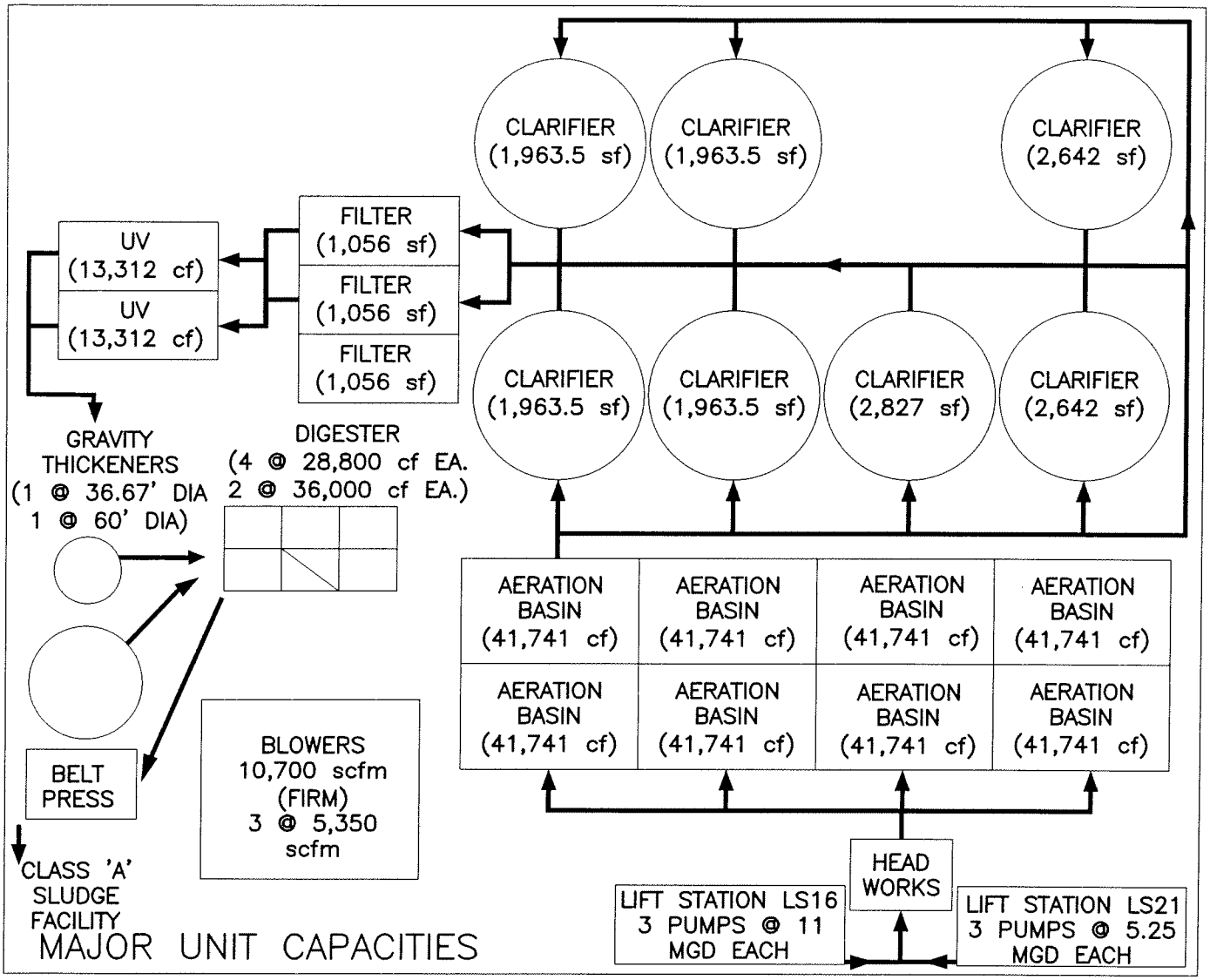

MAJOR UNIT CAPACITIES

Unit		Capacity
Lift Station	(Firm)	37.7 mgd
	(Total)	48.7 mgd
Aeration Basin		7.0 mgd
Secondary Clarifier	(DESIGN)	9.6 mgd
	(2–hour Peak)	23.0 mgd

PERMITTED FLOW

Annual Average	7.0 mgd
2 – hour Peak (mgd)	17.7 mgd
2 – hour Peak (gpm)	12,292 gpm

DECEMBER 2006

K:\Projects\Hi1\CityofHoustonPermits\WWTP\kingwood-central.dwg

KINGWOOD CENTRAL WWTP (INTERIM II)

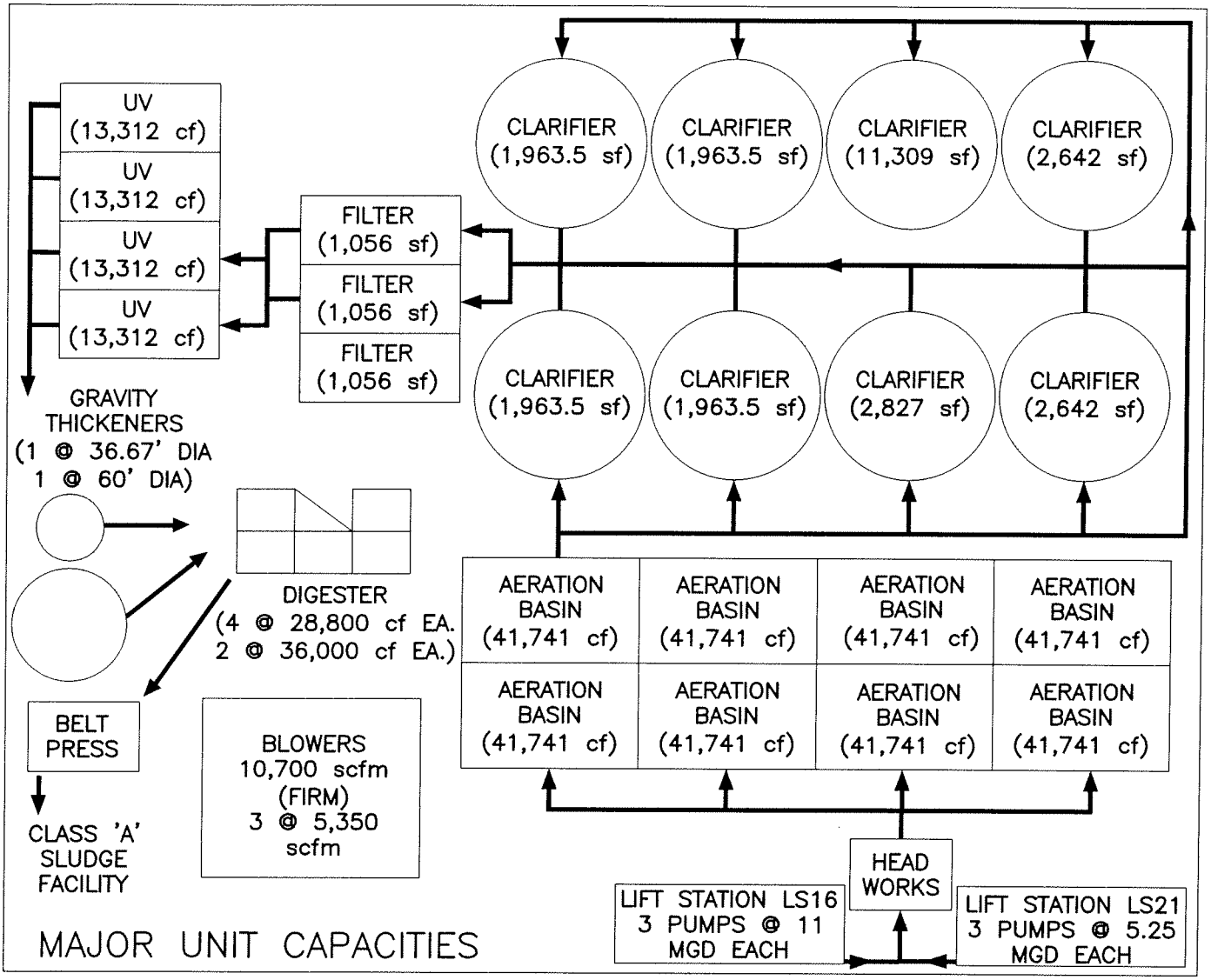

MAJOR UNIT CAPACITIES

Unit		Capacity
Lift Station	(Firm)	37.7 mgd
	(Total)	48.7 mgd
Aeration Basin		7.0 mgd
Secondary Clarifier	(DESIGN)	16.3 mgd
	(2-hour Peak)	39.3 mgd

PERMITTED FLOW

Annual Average	7.0 mgd
2 - hour Peak (mgd)	37.0 mgd
2 - hour Peak (gpm)	25,678 gpm

DECEMBER 2006

K:\Projects\Hi1\CityofHoustonPermits\WWTP\kingwood-central.dwg

KINGWOOD CENTRAL WWTP (FINAL)

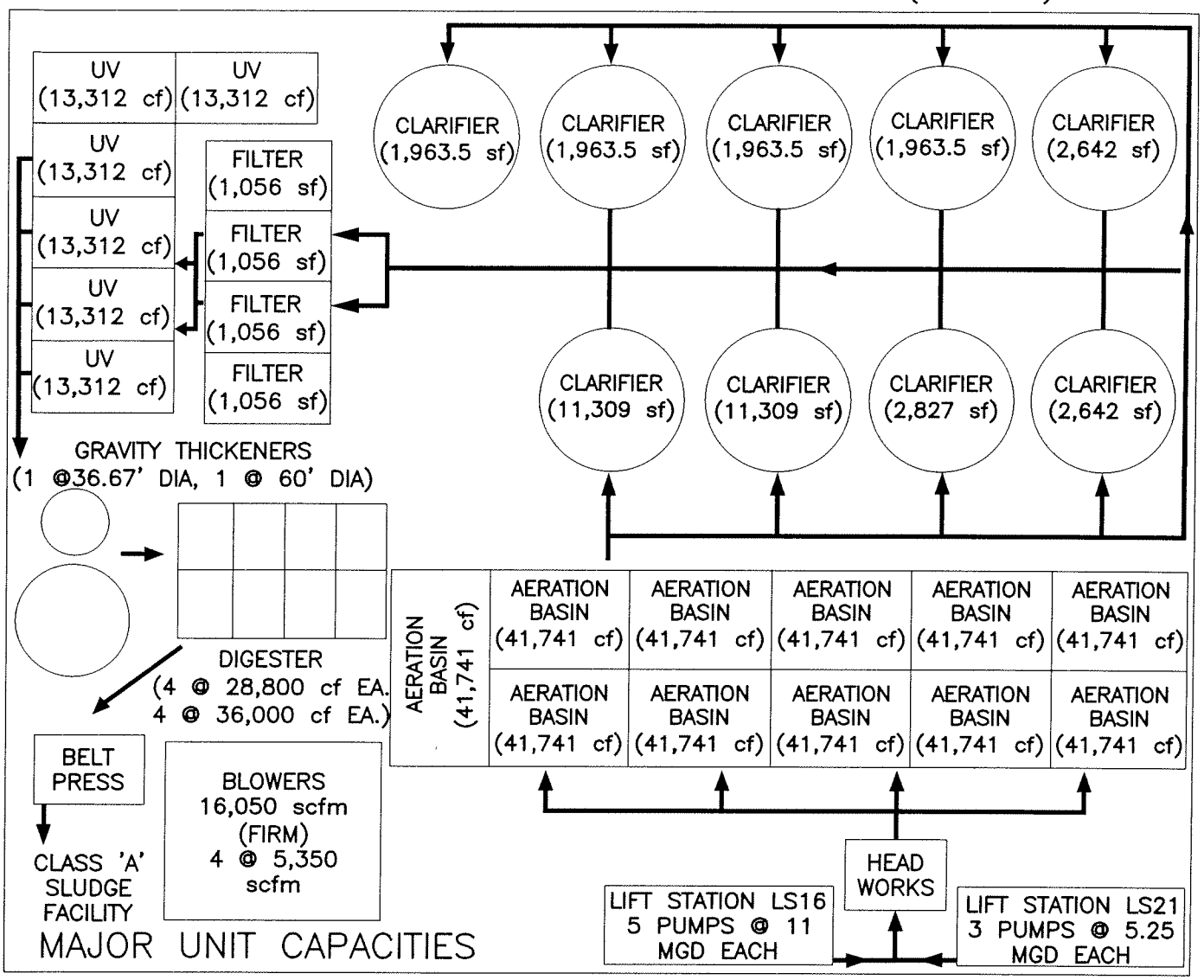

MAJOR UNIT CAPACITIES

Unit		Capacity
Lift Station	(Firm)	59.7 mgd
	(Total)	70.7 mgd
Aeration Basin		9.6 mgd
Secondary Clarifier	(DESIGN)	23.1 mgd
	(2-hour Peak)	55.6 mgd

PERMITTED FLOW

Annual Average	9.4 mgd
2 - hour Peak (mgd)	55.2 mgd
2 - hour Peak (gpm)	38,309 gpm

DECEMBER 2006

K:\Projects\Hi1\CityofHoustonPermits\WWTP\kingwood-central.dwg

APPENDIX B

DISCHARGE PERMIT AND PROCESS DIAGRAM

FOREST COVE WWTP

TPDES PERMIT NO. WQ0010495149
[For TCEQ office use only - EPA I.D. No. TX0115924]

TEXAS COMMISSION ON ENVIRONMENTAL QUALITY
P.O. Box 13087
Austin, Texas 78711-3087

This is a renewal that replaces TPDES Permit No. WQ0010495149 issued June 26, 2007.

PERMIT TO DISCHARGE WASTES
under provisions of
Section 402 of the Clean Water Act
and Chapter 26 of the Texas Water Code

City of Houston

whose mailing address is

4545 Groveway Drive
Houston, Texas 77087-1122

is authorized to treat and discharge wastes from the Forest Cove Wastewater Treatment Facility, SIC Code 4952

located approximately 1,100 feet north of Hamblen Road, approximately 2,750 feet east of the intersection of U.S. Highway 59 and State Highway 494, and 4,400 feet south of the Montgomery-Harris County Line in Harris County, Texas

to an unnamed ditch; thence to Harris County Flood Control District (HCFCD) ditch G-103-45-00; thence to Lake Houston in Segment No. 1002 of the San Jacinto River Basin

only according with effluent limitations, monitoring requirements and other conditions set forth in this permit, as well as the rules of the Texas Commission on Environmental Quality (TCEQ), the laws of the State of Texas, and other orders of the TCEQ. The issuance of this permit does not grant to the permittee the right to use private or public property for conveyance of wastewater along the discharge route described in this permit. This includes, but is not limited to, property belonging to any individual, partnership, corporation or other entity. Neither does this permit authorize any invasion of personal rights nor any violation of federal, state, or local laws or regulations. It is the responsibility of the permittee to acquire property rights as may be necessary to use the discharge route.

This permit shall expire at midnight, **July 1, 2013**.

ISSUED DATE: **AUG 05 2008**

For the Commission

EFFLUENT LIMITATIONS AND MONITORING REQUIREMENTS

Outfall Number 001

1. During the period beginning upon the date of issuance and lasting through the date of expiration, the permittee is authorized to discharge subject to the following effluent limitations:

The daily average flow of effluent shall not exceed 0.95 million gallons per day (MGD); nor shall the average discharge during any two-hour period (2-hour peak) exceed 2,639 gallons per minute (gpm).

Effluent Characteristic	Discharge Limitations				Minimum Self-Monitoring Requirements	
	Daily Avg mg/l(lbs/day)	7-day Avg mg/l	Daily Max mg/l	Single Grab mg/l	Report Daily Avg. & Daily Max. Measurement Frequency	Sample Type
Flow, MGD	Report	N/A	Report	N/A	Continuous	Totalizing Meter
Carbonaceous Biochemical Oxygen Demand (5-day)	10 (79)	15	25	35	One/week	Composite
Total Suspended Solids	15 (119)	25	40	60	One/week	Composite
Ammonia Nitrogen	3(24)	6	10	15	One/week	Composite
Fecal Coliform Bacteria colonies per 100 ml	200	400 (*)	N/A	800	Daily	Grab

(*) The 7-day average shall be reported in place of the Daily Max.

2. The permittee shall utilize an Ultraviolet Light (UV) system for disinfection purposes. An equivalent method of disinfection may be substituted only with prior approval of the Executive Director.

3. The pH shall not be less than 6.0 standard units nor greater than 9.0 standard units and shall be monitored twice per month by grab sample.

4. There shall be no discharge of floating solids or visible foam in other than trace amounts and no discharge of visible oil.

5. Effluent monitoring samples shall be taken at the following location(s): Following the final treatment unit.

6. The effluent shall contain minimum dissolved oxygen of 4.0 mg/l and shall be monitored once per week by grab sample.

DEFINITIONS AND STANDARD PERMIT CONDITIONS

As required by Title 30 Texas Administrative Code (TAC) Chapter 305, certain regulations appear as standard conditions in waste discharge permits. 30 TAC §§305.121 - 305.129 (relating to Permit Characteristics and Conditions) as promulgated under the Texas Water Code (TWC) §§5.103 and 5.105, and the Texas Health and Safety Code (THSC) §§361.017 and 361.024(a), establish the characteristics and standards for waste discharge permits, including sewage sludge, and those sections of 40 Code of Federal Regulations (CFR) Part 122 adopted by reference by the Commission. The following text includes these conditions and incorporates them into this permit. All definitions in TWC §26.001 and 30 TAC Chapter 305 shall apply to this permit and are incorporated by reference. Some specific definitions of words or phrases used in this permit are as follows:

1. Flow Measurements

   a. Annual average flow - the arithmetic average of all daily flow determinations taken within the preceding 12 consecutive calendar months. The annual average flow determination shall consist of daily flow volume determinations made by a totalizing meter, charted on a chart recorder and limited to major domestic wastewater discharge facilities with one million gallons per day or greater permitted flow.

   b. Daily average flow - the arithmetic average of all determinations of the daily flow within a period of one calendar month. The daily average flow determination shall consist of determinations made on at least four separate days. If instantaneous measurements are used to determine the daily flow, the determination shall be the arithmetic average of all instantaneous measurements taken during that month. Daily average flow determination for intermittent discharges shall consist of a minimum of three flow determinations on days of discharge.

   c. Daily maximum flow - the highest total flow for any 24-hour period in a calendar month.

   d. Instantaneous flow - the measured flow during the minimum time required to interpret the flow measuring device.

   e. 2-hour peak flow (domestic wastewater treatment plants) - the maximum flow sustained for a two-hour period during the period of daily discharge. The average of multiple measurements of instantaneous maximum flow within a two-hour period may be used to calculate the 2-hour peak flow.

   f. Maximum 2-hour peak flow (domestic wastewater treatment plants) - the highest 2-hour peak flow for any 24-hour period in a calendar month.

2. Concentration Measurements

   a. Daily average concentration - the arithmetic average of all effluent samples, composite or grab as required by this permit, within a period of one calendar month, consisting of at least four separate representative measurements.

      i. For domestic wastewater treatment plants - When four samples are not available in a calendar month, the arithmetic average (weighted by flow) of all values in the previous four consecutive month period consisting of at least four measurements shall be utilized as the daily average concentration.

      ii. For all other wastewater treatment plants - When four samples are not available in a calendar month, the arithmetic average (weighted by flow) of all values taken during the month shall be utilized as the daily average concentration.

   b. 7-day average concentration - the arithmetic average of all effluent samples, composite or grab as required by this permit, within a period of one calendar week, Sunday through Saturday.

   c. Daily maximum concentration - the maximum concentration measured on a single day, by the sample type specified in the permit, within a period of one calendar month.

   d. Daily discharge - the discharge of a pollutant measured during a calendar day or any 24-hour period that reasonably represents the calendar day for purposes of sampling. For pollutants with limitations expressed in terms of mass, the "daily discharge" is calculated as the total mass of the pollutant discharged over the sampling day. For pollutants with limitations expressed in other units of measurement, the "daily discharge" is calculated as the average measurement of the pollutant over the sampling day.

      The "daily discharge" determination of concentration made using a composite sample shall be the concentration of the composite sample. When grab samples are used, the "daily discharge" determination of concentration shall be the arithmetic average (weighted by flow value) of all samples collected during that day.

e. Fecal coliform bacteria concentration - the number of colonies of fecal coliform bacteria per 100 milliliters effluent. The daily average fecal coliform bacteria concentration is a geometric mean of the values for the effluent samples collected in a calendar month. The geometric mean shall be determined by calculating the nth root of the product of all measurements made in a calendar month, where n equals the number of measurements made; or, computed as the antilogarithm of the arithmetic mean of the logarithms of all measurements made in a calendar month. For any measurement of fecal coliform bacteria equaling zero, a substituted value of one shall be made for input into either computation method. The 7-day average for fecal coliform bacteria is the geometric mean of the values for all effluent samples collected during a calendar week.

f. Daily average loading (lbs/day) - the arithmetic average of all daily discharge loading calculations during a period of one calendar month. These calculations must be made for each day of the month that a parameter is analyzed. The daily discharge, in terms of mass (lbs/day), is calculated as (Flow, MGD x Concentration, mg/l x 8.34).

g. Daily maximum loading (lbs/day) - the highest daily discharge, in terms of mass (lbs/day), within a period of one calendar month.

3. Sample Type

a. Composite sample - For domestic wastewater, a composite sample is a sample made up of a minimum of three effluent portions collected in a continuous 24-hour period or during the period of daily discharge if less than 24 hours, and combined in volumes proportional to flow, and collected at the intervals required by 30 TAC §319.9 (a). For industrial wastewater, a composite sample is a sample made up of a minimum of three effluent portions collected in a continuous 24-hour period or during the period of daily discharge if less than 24 hours, and combined in volumes proportional to flow, and collected at the intervals required by 30 TAC §319.9 (b).

b. Grab sample - an individual sample collected in less than 15 minutes.

4. Treatment Facility (facility) - wastewater facilities used in the conveyance, storage, treatment, recycling, reclamation and/or disposal of domestic sewage, industrial wastes, agricultural wastes, recreational wastes, or other wastes including sludge handling or disposal facilities under the jurisdiction of the Commission.

5. The term "sewage sludge" is defined as solid, semi-solid, or liquid residue generated during the treatment of domestic sewage in 30 TAC Chapter 312. This includes the solids that have not been classified as hazardous waste separated from wastewater by unit processes.

6. Bypass - the intentional diversion of a waste stream from any portion of a treatment facility.

MONITORING AND REPORTING REQUIREMENTS

1. Self-Reporting

Monitoring results shall be provided at the intervals specified in the permit. Unless otherwise specified in this permit or otherwise ordered by the Commission, the permittee shall conduct effluent sampling and reporting in accordance with 30 TAC §§319.4 - 319.12. Unless otherwise specified, a monthly effluent report shall be submitted each month, to the Enforcement Division (MC 224), by the 20th day of the following month for each discharge which is described by this permit whether or not a discharge is made for that month. Monitoring results must be reported on an approved self-report form that is signed and certified as required by Monitoring and Reporting Requirements No. 10.

As provided by state law, the permittee is subject to administrative, civil and criminal penalties, as applicable, for negligently or knowingly violating the Clean Water Act (CWA); TWC Chapters 26, 27, and 28; and THSC Chapter 361, including but not limited to knowingly making any false statement, representation, or certification on any report, record, or other document submitted or required to be maintained under this permit, including monitoring reports or reports of compliance or noncompliance, or falsifying, tampering with or knowingly rendering inaccurate any monitoring device or method required by this permit or violating any other requirement imposed by state or federal regulations.

2. Test Procedures

Unless otherwise specified in this permit, test procedures for the analysis of pollutants shall comply with procedures specified in 30 TAC §§319.11 - 319.12. Measurements, tests, and calculations shall be accurately accomplished in a representative manner.

3. Records of Results

   a. Monitoring samples and measurements shall be taken at times and in a manner so as to be representative of the monitored activity.

   b. Except for records of monitoring information required by this permit related to the permittee's sewage sludge use and disposal activities, which shall be retained for a period of at least five years (or longer as required by 40 CFR Part 503), monitoring and reporting records, including strip charts and records of calibration and maintenance, copies of all records required by this permit, records of all data used to complete the application for this permit, and the certification required by 40 CFR § 264.73(b)(9) shall be retained at the facility site, or shall be readily available for review by a TCEQ representative for a period of three years from the date of the record or sample, measurement, report, application or certification. This period shall be extended at the request of the Executive Director.

   c. Records of monitoring activities shall include the following:

      i. date, time and place of sample or measurement;
      ii. identity of individual who collected the sample or made the measurement.
      iii. date and time of analysis;
      iv. identity of the individual and laboratory who performed the analysis;
      v. the technique or method of analysis; and
      vi. the results of the analysis or measurement and quality assurance/quality control records.

      The period during which records are required to be kept shall be automatically extended to the date of the final disposition of any administrative or judicial enforcement action that may be instituted against the permittee.

4. Additional Monitoring by Permittee

   If the permittee monitors any pollutant at the location(s) designated herein more frequently than required by this permit using approved analytical methods as specified above, all results of such monitoring shall be included in the calculation and reporting of the values submitted on the approved self-report form. Increased frequency of sampling shall be indicated on the self-report form.

5. Calibration of Instruments

   All automatic flow measuring or recording devices and all totalizing meters for measuring flows shall be accurately calibrated by a trained person at plant start-up and as often thereafter as necessary to ensure accuracy, but not less often than annually unless authorized by the Executive Director for a longer period. Such person shall verify in writing that the device is operating properly and giving accurate results. Copies of the verification shall be retained at the facility site and/or shall be readily available for review by a TCEQ representative for a period of three years.

6. Compliance Schedule Reports

   Reports of compliance or noncompliance with, or any progress reports on, interim and final requirements contained in any compliance schedule of the permit shall be submitted no later than 14 days following each schedule date to the Regional Office and the Enforcement Division (MC 224).

7. Noncompliance Notification

   a. In accordance with 30 TAC §305.125(9) any noncompliance which may endanger human health or safety, or the environment shall be reported by the permittee to the TCEQ. Report of such information shall be provided orally or by facsimile transmission (FAX) to the Regional Office within 24 hours of becoming aware of the noncompliance. A written submission of such information shall also be provided by the permittee to the Regional Office and the Enforcement Division (MC 224) within five working days of becoming aware of the noncompliance. The written submission shall contain a description of the noncompliance and its cause; the potential danger to human health or safety, or the environment; the period of noncompliance, including exact dates and times; if the noncompliance has not been corrected, the time it is expected to continue; and steps taken or planned to reduce, eliminate, and prevent recurrence of the noncompliance, and to mitigate its adverse effects.

   b. The following violations shall be reported under Monitoring and Reporting Requirement 7.a.:

      i. Unauthorized discharges as defined in Permit Condition 2(g).
      ii. Any unanticipated bypass that exceeds any effluent limitation in the permit.
      iii. Violation of a permitted maximum daily discharge limitation for pollutants listed specifically in the Other Requirements section of an Industrial TPDES permit.

c. In addition to the above, any effluent violation which deviates from the permitted effluent limitation by more than 40% shall be reported by the permittee in writing to the Regional Office and the Enforcement Division (MC 224) within 5 working days of becoming aware of the noncompliance.

d. Any noncompliance other than that specified in this section, or any required information not submitted or submitted incorrectly, shall be reported to the Enforcement Division (MC 224) as promptly as possible. For effluent limitation violations, noncompliances shall be reported on the approved self-report form.

8. In accordance with the procedures described in 30 TAC §§ 35.301 - 35.303 (relating to Water Quality Emergency and Temporary Orders) if the permittee knows in advance of the need for a bypass, it shall submit prior notice by applying for such authorization.

9. Changes in Discharges of Toxic Substances

All existing manufacturing, commercial, mining, and silvicultural permittees shall notify the Regional Office, orally or by facsimile transmission within 24 hours, and both the Regional Office and the Enforcement Division (MC 224) in writing within five (5) working days, after becoming aware of or having reason to believe:

a. That any activity has occurred or will occur which would result in the discharge, on a routine or frequent basis, of any toxic pollutant listed at 40 CFR Part 122, Appendix D, Tables II and III (excluding Total Phenols) which is not limited in the permit, if that discharge will exceed the highest of the following "notification levels":

i. One hundred micrograms per liter (100 μg/L);
ii. Two hundred micrograms per liter (200 μg/L) for acrolein and acrylonitrile; five hundred micrograms per liter (500 μg/L) for 2,4-dinitrophenol and for 2-methyl-4,6-dinitrophenol; and one milligram per liter (1 mg/L) for antimony;
iii. Five (5) times the maximum concentration value reported for that pollutant in the permit application; or
iv. The level established by the TCEQ.

b. That any activity has occurred or will occur which would result in any discharge, on a nonroutine or infrequent basis, of a toxic pollutant which is not limited in the permit, if that discharge will exceed the highest of the following "notification levels":

i. Five hundred micrograms per liter (500 μg/L);
ii. One milligram per liter (1 mg/L) for antimony;
iii. Ten (10) times the maximum concentration value reported for that pollutant in the permit application; or
iv. The level established by the TCEQ.

10. Signatories to Reports

All reports and other information requested by the Executive Director shall be signed by the person and in the manner required by 30 TAC §305.128 (relating to Signatories to Reports).

11. All Publicly Owned Treatment Works (POTWs) must provide adequate notice to the Executive Director of the following:

a. Any new introduction of pollutants into the POTW from an indirect discharger which would be subject to CWA §301 or §306 if it were directly discharging those pollutants;

b. Any substantial change in the volume or character of pollutants being introduced into that POTW by a source introducing pollutants into the POTW at the time of issuance of the permit; and

c. For the purpose of this paragraph, adequate notice shall include information on:

i. The quality and quantity of effluent introduced into the POTW; and
ii. Any anticipated impact of the change on the quantity or quality of effluent to be discharged from the POTW.

PERMIT CONDITIONS

1. General

   a. When the permittee becomes aware that it failed to submit any relevant facts in a permit application, or submitted incorrect information in an application or in any report to the Executive Director, it shall promptly submit such facts or information.

   b. This permit is granted on the basis of the information supplied and representations made by the permittee during action on an application, and relying upon the accuracy and completeness of that information and those representations. After notice and opportunity for a hearing, this permit may be modified, suspended, or revoked, in whole or in part, in accordance with 30 TAC Chapter 305, Subchapter D, during its term for good cause including, but not limited to, the following:

      i. Violation of any terms or conditions of this permit;
      ii. Obtaining this permit by misrepresentation or failure to disclose fully all relevant facts; or
      iii. A change in any condition that requires either a temporary or permanent reduction or elimination of the authorized discharge.

   c. The permittee shall furnish to the Executive Director, upon request and within a reasonable time, any information to determine whether cause exists for amending, revoking, suspending or terminating the permit. The permittee shall also furnish to the Executive Director, upon request, copies of records required to be kept by the permit.

2. Compliance

   a. Acceptance of the permit by the person to whom it is issued constitutes acknowledgment and agreement that such person will comply with all the terms and conditions embodied in the permit, and the rules and other orders of the Commission.

   b. The permittee has a duty to comply with all conditions of the permit. Failure to comply with any permit condition constitutes a violation of the permit and the Texas Water Code or the Texas Health and Safety Code, and is grounds for enforcement action, for permit amendment, revocation, or suspension, or for denial of a permit renewal application or an application for a permit for another facility.

   c. It shall not be a defense for a permittee in an enforcement action that it would have been necessary to halt or reduce the permitted activity in order to maintain compliance with the conditions of the permit.

   d. The permittee shall take all reasonable steps to minimize or prevent any discharge or sludge use or disposal or other permit violation that has a reasonable likelihood of adversely affecting human health or the environment.

   e. Authorization from the Commission is required before beginning any change in the permitted facility or activity that may result in noncompliance with any permit requirements.

   f. A permit may be amended, suspended and reissued, or revoked for cause in accordance with 30 TAC §§ 305.62 and 305.66 and TWC§7.302. The filing of a request by the permittee for a permit amendment, suspension and reissuance, or termination, or a notification of planned changes or anticipated noncompliance, does not stay any permit condition.

   g. There shall be no unauthorized discharge of wastewater or any other waste. For the purpose of this permit, an unauthorized discharge is considered to be any discharge of wastewater into or adjacent to water in the state at any location not permitted as an outfall or otherwise defined in the Other Requirements section of this permit.

   h. In accordance with 30 TAC § 305.535(a), the permittee may allow any bypass to occur from a TPDES permitted facility which does not cause permitted effluent limitations to be exceeded or an unauthorized discharge to occur, but only if the bypass is also for essential maintenance to assure efficient operation.

   i. The permittee is subject to administrative, civil, and criminal penalties, as applicable, under TWC §§7.051 - 7.075 (relating to Administrative Penalties), 7.101 - 7.111 (relating to Civil Penalties), and 7.141 - 7.202 (relating to Criminal Offenses and Penalties) for violations including, but not limited to, negligently or knowingly violating the federal CWA §§301, 302, 306, 307, 308, 318, or 405, or any condition or limitation implementing any sections in a permit issued under the CWA §402, or any requirement imposed in a pretreatment program approved under the CWA §§402 (a)(3) or 402 (b)(8).

3. Inspections and Entry

   a. Inspection and entry shall be allowed as prescribed in the TWC Chapters 26, 27, and 28, and THSC Chapter 361.

   b. The members of the Commission and employees and agents of the Commission are entitled to enter any public or private property at any reasonable time for the purpose of inspecting and investigating conditions relating to the quality of water in the state or the compliance with any rule, regulation, permit or other order of the Commission. Members, employees, or agents of the Commission and Commission contractors are entitled to enter public or private property at any reasonable time to investigate or monitor or, if the responsible party is not responsive or there is an immediate danger to public health or the environment, to remove or remediate a condition related to the quality of water in the state. Members, employees, Commission contractors, or agents acting under this authority who enter private property shall observe the establishment's rules and regulations concerning safety, internal security, and fire protection, and if the property has management in residence, shall notify management or the person then in charge of his presence and shall exhibit proper credentials. If any member, employee, Commission contractor, or agent is refused the right to enter in or on public or private property under this authority, the Executive Director may invoke the remedies authorized in TWC §7.002. The statement above, that Commission entry shall occur in accordance with an establishment's rules and regulations concerning safety, internal security, and fire protection, is not grounds for denial or restriction of entry to any part of the facility, but merely describes the Commission's duty to observe appropriate rules and regulations during an inspection.

4. Permit Amendment and/or Renewal

   a. The permittee shall give notice to the Executive Director as soon as possible of any planned physical alterations or additions to the permitted facility if such alterations or additions would require a permit amendment or result in a violation of permit requirements. Notice shall also be required under this paragraph when:

      i. The alteration or addition to a permitted facility may meet one of the criteria for determining whether a facility is a new source in accordance with 30 TAC §305.534 (relating to New Sources and New Dischargers); or

      ii. The alteration or addition could significantly change the nature or increase the quantity of pollutants discharged. This notification applies to pollutants that are subject neither to effluent limitations in the permit, nor to notification requirements in Monitoring and Reporting Requirements No. 9;

      iii. The alteration or addition results in a significant change in the permittee's sludge use or disposal practices, and such alteration, addition, or change may justify the application of permit conditions that are different from or absent in the existing permit, including notification of additional use or disposal sites not reported during the permit application process or not reported pursuant to an approved land application plan.

   b. Prior to any facility modifications, additions, or expansions that will increase the plant capacity beyond the permitted flow, the permittee must apply for and obtain proper authorization from the Commission before commencing construction.

   c. The permittee must apply for an amendment or renewal at least 180 days prior to expiration of the existing permit in order to continue a permitted activity after the expiration date of the permit. If an application is submitted prior to the expiration date of the permit, the existing permit shall remain in effect until the application is approved, denied, or returned. If the application is returned or denied, authorization to continue such activity shall terminate upon the effective date of the action. If an application is not submitted prior to the expiration date of the permit, the permit shall expire and authorization to continue such activity shall terminate.

   d. Prior to accepting or generating wastes which are not described in the permit application or which would result in a significant change in the quantity or quality of the existing discharge, the permittee must report the proposed changes to the Commission. The permittee must apply for a permit amendment reflecting any necessary changes in permit conditions, including effluent limitations for pollutants not identified and limited by this permit.

   e. In accordance with the TWC §26.029(b), after a public hearing, notice of which shall be given to the permittee, the Commission may require the permittee, from time to time, for good cause, in accordance with applicable laws, to conform to new or additional conditions.

   f. If any toxic effluent standard or prohibition (including any schedule of compliance specified in such effluent standard or prohibition) is promulgated under CWA §307(a) for a toxic pollutant which is present in the discharge and that standard or prohibition is more stringent than any limitation on the pollutant in this permit, this permit shall be modified or revoked and reissued to conform to the toxic effluent standard or prohibition. The permittee shall comply with effluent standards or prohibitions established under CWA §307(a) for toxic pollutants within the time provided in the regulations that established those standards or prohibitions, even if the permit has not yet been modified to incorporate the requirement.

5. Permit Transfer

   a. Prior to any transfer of this permit, Commission approval must be obtained. The Commission shall be notified in writing of any change in control or ownership of facilities authorized by this permit. Such notification should be sent to the Applications Review and Processing Team (MC 148) of the Water Quality Division.

   b. A permit may be transferred only according to the provisions of 30 TAC §305.64 (relating to Transfer of Permits) and 30 TAC §50.133 (relating to Executive Director Action on Application or WQMP update).

6. Relationship to Hazardous Waste Activities

   This permit does not authorize any activity of hazardous waste storage, processing, or disposal that requires a permit or other authorization pursuant to the Texas Health and Safety Code.

7. Relationship to Water Rights

   Disposal of treated effluent by any means other than discharge directly to water in the state must be specifically authorized in this permit and may require a permit pursuant to TWC Chapter 11.

8. Property Rights

   A permit does not convey any property rights of any sort, or any exclusive privilege.

9. Permit Enforceability

   The conditions of this permit are severable, and if any provision of this permit, or the application of any provision of this permit to any circumstances, is held invalid, the application of such provision to other circumstances, and the remainder of this permit, shall not be affected thereby.

10. Relationship to Permit Application

    The application pursuant to which the permit has been issued is incorporated herein; provided, however, that in the event of a conflict between the provisions of this permit and the application, the provisions of the permit shall control.

11. Notice of Bankruptcy.

    a. Each permittee shall notify the executive director, in writing, immediately following the filing of a voluntary or involuntary petition for bankruptcy under any chapter of Title 11 (Bankruptcy) of the United States Code (11 USC) by or against:
       i. the permittee;
       ii. an entity (as that term is defined in 11 USC, §101(14)) controlling the permittee or listing the permit or permittee as property of the estate; or
       iii. an affiliate (as that term is defined in 11 USC, §101(2)) of the permittee.

    b. This notification must indicate:
       i. the name of the permittee and the permit number(s);
       ii. the bankruptcy court in which the petition for bankruptcy was filed; and
       iii. the date of filing of the petition.

OPERATIONAL REQUIREMENTS

1. The permittee shall at all times ensure that the facility and all of its systems of collection, treatment, and disposal are properly operated and maintained. This includes, but is not limited to, the regular, periodic examination of wastewater solids within the treatment plant by the operator in order to maintain an appropriate quantity and quality of solids inventory as described in the various operator training manuals and according to accepted industry standards for process control. Process control, maintenance, and operations records shall be retained at the facility site, or shall be readily available for review by a TCEQ representative, for a period of three years.

2. Upon request by the Executive Director, the permittee shall take appropriate samples and provide proper analysis in order to demonstrate compliance with Commission rules. Unless otherwise specified in this permit or otherwise ordered by the Commission, the permittee shall comply with all applicable provisions of 30 TAC Chapter 312 concerning sewage sludge use and disposal and 30 TAC §§319.21 - 319.29 concerning the discharge of certain hazardous metals.

3. Domestic wastewater treatment facilities shall comply with the following provisions:

   a. The permittee shall notify the Municipal Permits Team, Wastewater Permitting Section (MC 148) of the Water Quality Division, in writing, of any facility expansion at least 90 days prior to conducting such activity.

   b. The permittee shall submit a closure plan for review and approval to the Municipal Permits Team, Wastewater Permitting Section (MC 148) of the Water Quality Division, for any closure activity at least 90 days prior to conducting such activity. Closure is the act of permanently taking a waste management unit or treatment facility out of service and includes the permanent removal from service of any pit, tank, pond, lagoon, surface impoundment and/or other treatment unit regulated by this permit.

4. The permittee is responsible for installing prior to plant start-up, and subsequently maintaining, adequate safeguards to prevent the discharge of untreated or inadequately treated wastes during electrical power failures by means of alternate power sources, standby generators, and/or retention of inadequately treated wastewater.

5. Unless otherwise specified, the permittee shall provide a readily accessible sampling point and, where applicable, an effluent flow measuring device or other acceptable means by which effluent flow may be determined.

6. The permittee shall remit an annual water quality fee to the Commission as required by 30 TAC Chapter 21. Failure to pay the fee may result in revocation of this permit under TWC §7.302(b)(6).

7. Documentation

   For all written notifications to the Commission required of the permittee by this permit, the permittee shall keep and make available a copy of each such notification under the same conditions as self-monitoring data are required to be kept and made available. Except for information required for TPDES permit applications, effluent data, including effluent data in permits, draft permits and permit applications, and other information specified as not confidential in 30 TAC §1.5(d), any information submitted pursuant to this permit may be claimed as confidential by the submitter. Any such claim must be asserted in the manner prescribed in the application form or by stamping the words "confidential business information" on each page containing such information. If no claim is made at the time of submission, information may be made available to the public without further notice. If the Commission or Executive Director agrees with the designation of confidentiality, the TCEQ will not provide the information for public inspection unless required by the Texas Attorney General or a court pursuant to an open records request. If the Executive Director does not agree with the designation of confidentiality, the person submitting the information will be notified.

8. Facilities that generate domestic wastewater shall comply with the following provisions; domestic wastewater treatment facilities at permitted industrial sites are excluded.

   a. Whenever flow measurements for any domestic sewage treatment facility reach 75% of the permitted daily average or annual average flow for three consecutive months, the permittee must initiate engineering and financial planning for expansion and/or upgrading of the domestic wastewater treatment and/or collection facilities. Whenever the flow reaches 90% of the permitted daily average or annual average flow for three consecutive months, the permittee shall obtain necessary authorization from the Commission to commence construction of the necessary additional treatment and/or collection facilities. In the case of a domestic wastewater treatment facility which reaches 75% of the permitted daily average or annual average flow for three consecutive months, and the planned population to be served or the quantity of waste produced is not expected to exceed the design limitations of the treatment facility, the permittee shall submit an engineering report supporting this claim to the Executive Director of the Commission.

      If in the judgment of the Executive Director the population to be served will not cause permit noncompliance, then the requirement of this section may be waived. To be effective, any waiver must be in writing and signed by the Director of the Enforcement Division (MC 149) of the Commission, and such waiver of these requirements will be reviewed upon expiration of the existing permit; however, any such waiver shall not be interpreted as condoning or excusing any violation of any permit parameter.

   b. The plans and specifications for domestic sewage collection and treatment works associated with any domestic permit must be approved by the Commission and failure to secure approval before commencing construction of such works or making a discharge is a violation of this permit and each day is an additional violation until approval has been secured.

c. Permits for domestic wastewater treatment plants are granted subject to the policy of the Commission to encourage the development of area-wide waste collection, treatment, and disposal systems. The Commission reserves the right to amend any domestic wastewater permit in accordance with applicable procedural requirements to require the system covered by this permit to be integrated into an area-wide system, should such be developed; to require the delivery of the wastes authorized to be collected in, treated by or discharged from said system, to such area-wide system; or to amend this permit in any other particular to effectuate the Commission's policy. Such amendments may be made when the changes required are advisable for water quality control purposes and are feasible on the basis of waste treatment technology, engineering, financial, and related considerations existing at the time the changes are required, exclusive of the loss of investment in or revenues from any then existing or proposed waste collection, treatment or disposal system.

9. Domestic wastewater treatment plants shall be operated and maintained by sewage plant operators holding a valid certificate of competency at the required level as defined in 30 TAC Chapter 30.

10. For Publicly Owned Treatment Works (POTWs), the 30-day average (or monthly average) percent removal for BOD and TSS shall not be less than 85%, unless otherwise authorized by this permit.

11. Facilities that generate industrial solid waste as defined in 30 TAC §335.1 shall comply with these provisions:

    a. Any solid waste, as defined in 30 TAC §335.1 (including but not limited to such wastes as garbage, refuse, sludge from a waste treatment, water supply treatment plant or air pollution control facility, discarded materials, discarded materials to be recycled, whether the waste is solid, liquid, or semisolid), generated by the permittee during the management and treatment of wastewater, must be managed in accordance with all applicable provisions of 30 TAC Chapter 335, relating to Industrial Solid Waste Management.

    b. Industrial wastewater that is being collected, accumulated, stored, or processed before discharge through any final discharge outfall, specified by this permit, is considered to be industrial solid waste until the wastewater passes through the actual point source discharge and must be managed in accordance with all applicable provisions of 30 TAC Chapter 335.

    c. The permittee shall provide written notification, pursuant to the requirements of 30 TAC §335.8(b)(1), to the Environmental Cleanup Section (MC 127) of the Remediation Division informing the Commission of any closure activity involving an Industrial Solid Waste Management Unit, at least 90 days prior to conducting such an activity.

    d. Construction of any industrial solid waste management unit requires the prior written notification of the proposed activity to the Registration and Reporting Section (MC 129) of the Registration, Review, and Reporting Division. No person shall dispose of industrial solid waste, including sludge or other solids from wastewater treatment processes, prior to fulfilling the deed recordation requirements of 30 TAC §335.5.

    e. The term "industrial solid waste management unit" means a landfill, surface impoundment, waste-pile, industrial furnace, incinerator, cement kiln, injection well, container, drum, salt dome waste containment cavern, or any other structure vessel, appurtenance, or other improvement on land used to manage industrial solid waste.

    f. The permittee shall keep management records for all sludge (or other waste) removed from any wastewater treatment process. These records shall fulfill all applicable requirements of 30 TAC Chapter 335 and must include the following, as it pertains to wastewater treatment and discharge:

        i. Volume of waste and date(s) generated from treatment process;
        ii. Volume of waste disposed of on-site or shipped off-site;
        iii. Date(s) of disposal;
        iv. Identity of hauler or transporter;
        v. Location of disposal site; and
        vi. Method of final disposal.

    The above records shall be maintained on a monthly basis. The records shall be retained at the facility site, or shall be readily available for review by authorized representatives of the TCEQ for at least five years.

12. For industrial facilities to which the requirements of 30 TAC Chapter 335 do not apply, sludge and solid wastes, including tank cleaning and contaminated solids for disposal, shall be disposed of in accordance with THSC Chapter 361.

SLUDGE PROVISIONS

The permittee is authorized to dispose of sludge only at a Texas Commission on Environmental Quality (TCEQ) authorized land application site or co-disposal landfill. **The disposal of sludge by land application on property owned, leased or under the direct control of the permittee is a violation of the permit unless the site is authorized with the TCEQ. This provision does not authorize Distribution and Marketing of sludge. This provision does not authorize land application of Class A Sludge. This provision does not authorize the permittee to land apply sludge on property owned, leased or under the direct control of the permittee.**

SECTION I. REQUIREMENTS APPLYING TO ALL SEWAGE SLUDGE LAND APPLICATION

A. General Requirements

1. The permittee shall handle and dispose of sewage sludge in accordance with 30 TAC Chapter 312 and all other applicable state and federal regulations in a manner that protects public health and the environment from any reasonably anticipated adverse effects due to any toxic pollutants that may be present in the sludge.

2. In all cases, if the person (permit holder) who prepares the sewage sludge supplies the sewage sludge to another person for land application use or to the owner or lease holder of the land, the permit holder shall provide necessary information to the parties who receive the sludge to assure compliance with these regulations.

3. The permittee shall give 180 days prior notice to the Executive Director in care of the Wastewater Permitting Section (MC 148) of the Water Quality Division of any change planned in the sewage sludge disposal practice.

B. Testing Requirements

1. Sewage sludge shall be tested once during the term of this permit in accordance with the method specified in both 40 CFR Part 261, Appendix II and 40 CFR Part 268, Appendix I [Toxicity Characteristic Leaching Procedure (TCLP)] or other method that receives the prior approval of the TCEQ for the contaminants listed in 40 CFR §261.24, Table 1. Sewage sludge failing this test shall be managed according to RCRA standards for generators of hazardous waste, and the waste's disposition must be in accordance with all applicable requirements for hazardous waste processing, storage, or disposal. Following failure of any TCLP test, the management or disposal of sewage sludge at a facility other than an authorized hazardous waste processing, storage, or disposal facility shall be prohibited until such time as the permittee can demonstrate the sewage sludge no longer exhibits the hazardous waste toxicity characteristics (as demonstrated by the results of the TCLP tests). A written report shall be provided to both the TCEQ Registration and Reporting Section (MC 129) of the Water Quality Division and the Regional Director (MC Region 12) within seven (7) days after failing the TCLP Test.

   The report shall contain test results, certification that unauthorized waste management has stopped and a summary of alternative disposal plans that comply with RCRA standards for the management of hazardous waste. The report shall be addressed to: Director, Registration, Review, and Reporting Division (MC 129), Texas Commission on Environmental Quality, P.O. Box 13087, Austin, Texas 78711-3087. In addition, the permittee shall prepare an annual report on the results of all sludge toxicity testing. This annual report shall be submitted to the TCEQ Regional Office (MC Region 12) and the Water Quality Compliance Monitoring Team (MC 224) of the Enforcement Division by September 1 of each year.

2. Sewage sludge shall not be applied to the land if the concentration of the pollutants exceeds the pollutant concentration criteria in Table 1. The frequency of testing for pollutants in Table 1 is found in Section I.C.

TABLE 1

Pollutant	Ceiling Concentration (Milligrams per kilogram)*
Arsenic	75
Cadmium	85
Chromium	3000
Copper	4300
Lead	840
Mercury	57
Molybdenum	75
Nickel	420
PCBs	49
Selenium	100
Zinc	7500

* Dry weight basis

3. Pathogen Control

All sewage sludge that is applied to agricultural land, forest, a public contact site, or a reclamation site shall be treated by one of the following methods to ensure that the sludge meets either the Class A or Class B pathogen requirements.

a. Six alternatives are available to demonstrate compliance with Class A sewage sludge. The first 4 options require either the density of fecal coliform in the sewage sludge be less than 1000 Most Probable Number (MPN) per gram of total solids (dry weight basis), or the density of Salmonella sp. bacteria in the sewage sludge be less than three MPN per four grams of total solids (dry weight basis) at the time the sewage sludge is used or disposed. Below are the additional requirements necessary to meet the definition of a Class A sludge.

Alternative 1 - The temperature of the sewage sludge that is used or disposed shall be maintained at or above a specific value for a period of time. See 30 TAC §312.82(a)(2)(A) for specific information.

Alternative 2 - The pH of the sewage sludge that is used or disposed shall be raised to above 12 std. units and shall remain above 12 std. units for 72 hours.

The temperature of the sewage sludge shall be above 52° Celsius for 12 hours or longer during the period that the pH of the sewage sludge is above 12 std. units.

At the end of the 72-hour period during which the pH of the sewage sludge is above 12 std. units, the sewage sludge shall be air dried to achieve a percent solids in the sewage sludge greater than 50%.

Alternative 3 - The sewage sludge shall be analyzed for enteric viruses prior to pathogen treatment. The limit for enteric viruses is less than one Plaque-forming Unit per four grams of total solids (dry weight basis) either before or following pathogen treatment. See 30 TAC §312.82(a)(2)(C)(i-iii) for specific information. The sewage sludge shall be analyzed for viable helminth ova prior to pathogen treatment. The limit for viable helminth ova is less than one per four grams of total solids (dry weight basis) either before or following pathogen treatment. See 30 TAC §312.82(a)(2)(C)(iv-vi) for specific information.

Alternative 4 - The density of enteric viruses in the sewage sludge shall be less than one Plaque-forming Unit per four grams of total solids (dry weight basis) at the time the sewage sludge is used or disposed. The density of viable helminth ova in the sewage sludge shall be less than one per four grams of total solids (dry weight basis) at the time the sewage sludge is used or disposed.

Alternative 5 (PFRP) - Sewage sludge that is used or disposed of shall be treated in one of the processes to Further Reduce Pathogens (PFRP) described in 40 CFR Part 503, Appendix B. PFRP include composting, heat drying, heat treatment, and thermophilic aerobic digestion.

Alternative 6 (PFRP Equivalent) - Sewage sludge that is used or disposed of shall be treated in a process that has been approved by the U. S. Environmental Protection Agency as being equivalent to those in Alternative 5.

b. Three alternatives are available to demonstrate compliance with Class B criteria for sewage sludge.

Alternative 1

i. A minimum of seven random samples of the sewage sludge shall be collected within 48 hours of the time the sewage sludge is used or disposed of during each monitoring episode for the sewage sludge.

ii. The geometric mean of the density of fecal coliform in the samples collected shall be less than either 2,000,000 MPN per gram of total solids (dry weight basis) or 2,000,000 Colony Forming Units per gram of total solids (dry weight basis).

Alternative 2 - Sewage sludge that is used or disposed of shall be treated in one of the Processes to Significantly Reduce Pathogens (PSRP) described in 40 CFR Part 503, Appendix B, so long as all of the following requirements are met by the generator of the sewage sludge.

i. Prior to use or disposal, all the sewage sludge must have been generated from a single location, except as provided in paragraph v. below;

ii. An independent Texas Licensed Professional Engineer must make a certification to the generator of a sewage sludge that the wastewater treatment facility generating the sewage sludge is designed to achieve one of the PSRP at the permitted design loading of the facility. The certification need only be repeated if the design loading of the facility is increased. The certification shall include a statement indicating the design meets all the applicable standards specified in Appendix B of 40 CFR Part 503;

iii. Prior to any off-site transportation or on-site use or disposal of any sewage sludge generated at a wastewater treatment facility, the chief certified operator of the wastewater treatment facility or other responsible official who manages the processes to significantly reduce pathogens at the wastewater treatment facility for the permittee, shall certify that the sewage sludge underwent at least the minimum operational requirements necessary in order to meet one of the PSRP. The acceptable processes and the minimum operational and record keeping requirements shall be in accordance with established U. S. Environmental Protection Agency final guidance;

iv. All certification records and operational records describing how the requirements of this paragraph were met shall be kept by the generator for a minimum of three years and be available for inspection by commission staff for review; and

v. If the sewage sludge is generated from a mixture of sources, resulting from a person who prepares sewage sludge from more than one wastewater treatment facility, the resulting derived product shall meet one of the PSRP, and shall meet the certification, operation, and record keeping requirements of this paragraph.

Alternative 3 - Sewage sludge shall be treated in an equivalent process that has been approved by the U. S. Environmental Protection Agency, so long as all of the following requirements are met by the generator of the sewage sludge.

i. Prior to use or disposal, all the sewage sludge must have been generated from a single location, except as provided in paragraph v. below;

ii. Prior to any off-site transportation or on-site use or disposal of any sewage sludge generated at a wastewater treatment facility, the chief certified operator of the wastewater treatment facility or other responsible official who manages the processes to significantly reduce pathogens at the wastewater treatment facility for the permittee, shall certify that the sewage sludge underwent at least the minimum operational requirements necessary in order to meet one of the PSRP. The acceptable processes and the minimum operational and record keeping requirements shall be in accordance with established U. S. Environmental Protection Agency final guidance;

iii. All certification records and operational records describing how the requirements of this paragraph were met shall be kept by the generator for a minimum of three years and be available for inspection by commission staff for review;

iv. The executive director will accept from the U. S. Environmental Protection Agency a finding of equivalency to the defined PSRP; and

v. If the sewage sludge is generated from a mixture of sources resulting from a person who prepares sewage sludge from more than one wastewater treatment facility, the resulting derived product shall meet one of the Processes to Significantly Reduce Pathogens, and shall meet the certification, operation, and record keeping requirements of this paragraph.

In addition, the following site restrictions must be met if Class B sludge is land applied:

i. Food crops with harvested parts that touch the sewage sludge/soil mixture and are totally above the land surface shall not be harvested for 14 months after application of sewage sludge.

ii. Food crops with harvested parts below the surface of the land shall not be harvested for 20 months after application of sewage sludge when the sewage sludge remains on the land surface for 4 months or longer prior to incorporation into the soil.

iii. Food crops with harvested parts below the surface of the land shall not be harvested for 38 months after application of sewage sludge when the sewage sludge remains on the land surface for less than 4 months prior to incorporation into the soil.

iv. Food crops, feed crops, and fiber crops shall not be harvested for 30 days after application of sewage sludge.

v. Animals shall not be allowed to graze on the land for 30 days after application of sewage sludge.

vi. Turf grown on land where sewage sludge is applied shall not be harvested for 1 year after application of the sewage sludge when the harvested turf is placed on either land with a high potential for public exposure or a lawn.

vii. Public access to land with a high potential for public exposure shall be restricted for 1 year after application of sewage sludge.

viii. Public access to land with a low potential for public exposure shall be restricted for 30 days after application of sewage sludge.

ix. Land application of sludge shall be in accordance with the buffer zone requirements found in 30 TAC §312.44.

4. Vector Attraction Reduction Requirements

All bulk sewage sludge that is applied to agricultural land, forest, a public contact site, or a reclamation site shall be treated by one of the following Alternatives 1 through 10 for vector attraction reduction.

Alternative 1 - The mass of volatile solids in the sewage sludge shall be reduced by a minimum of 38%.

Alternative 2 - If Alternative 1 cannot be met for an anaerobically digested sludge, demonstration can be made by digesting a portion of the previously digested sludge anaerobically in the laboratory in a bench-scale unit for 40 additional days at a temperature between 30° and 37° Celsius. Volatile solids must be reduced by less than 17% to demonstrate compliance.

Alternative 3 - If Alternative 1 cannot be met for an aerobically digested sludge, demonstration can be made by digesting a portion of the previously digested sludge with percent solids of two percent or less aerobically in the laboratory in a bench-scale unit for 30 additional days at 20° Celsius. Volatile solids must be reduced by less than 15% to demonstrate compliance.

Alternative 4 - The specific oxygen uptake rate (SOUR) for sewage sludge treated in an aerobic process shall be equal to or less than 1.5 milligrams of oxygen per hour per gram of total solids (dry weight basis) at a temperature of 20° Celsius.

Alternative 5 - Sewage sludge shall be treated in an aerobic process for 14 days or longer. During that time, the temperature of the sewage sludge shall be higher than 40° Celsius and the average temperature of the sewage sludge shall be higher than 45° Celsius.

Alternative 6 - The pH of sewage sludge shall be raised to 12 or higher by alkali addition and, without the addition of more alkali shall remain at 12 or higher for two hours and then remain at a pH of 11.5 or higher for an additional 22 hours at the time the sewage sludge is prepared for sale or given away in a bag or other container.

Alternative 7 - The percent solids of sewage sludge that does not contain unstabilized solids generated in a primary wastewater treatment process shall be equal to or greater than 75% based on the moisture content and total solids prior to mixing with other materials. Unstabilized solids are defined as organic materials in sewage sludge that have not been treated in either an aerobic or anaerobic treatment process.

Alternative 8 - The percent solids of sewage sludge that contains unstabilized solids generated in a primary wastewater treatment process shall be equal to or greater than 90% based on the moisture content and total solids prior to mixing with other materials at the time the sludge is used. Unstabilized solids are defined as organic materials in sewage sludge that have not been treated in either an aerobic or anaerobic treatment process.

Alternative 9 -
i. Sewage sludge shall be injected below the surface of the land.
ii. No significant amount of the sewage sludge shall be present on the land surface within one hour after the sewage sludge is injected.
iii. When sewage sludge that is injected below the surface of the land is Class A with respect to pathogens, the sewage sludge shall be injected below the land surface within eight hours after being discharged from the pathogen treatment process.

Alternative 10-
i. Sewage sludge applied to the land surface or placed on a surface disposal site shall be incorporated into the soil within six hours after application to or placement on the land.
ii. When sewage sludge that is incorporated into the soil is Class A with respect to pathogens, the sewage sludge shall be applied to or placed on the land within eight hours after being discharged from the pathogen treatment process.

C. Monitoring Requirements

Toxicity Characteristic Leaching Procedure (TCLP) Test - once during the term of this permit

PCBs - once during the term of this permit

All metal constituents and fecal coliform or Salmonella sp. bacteria shall be monitored at the appropriate frequency shown below, pursuant to 30 TAC §312.46(a)(1):

Amount of sewage sludge (*) metric tons per 365-day period	Monitoring Frequency
0 to less than 290	Once/Year
290 to less than 1,500	Once/Quarter
1,500 to less than 15,000	Once/Two Months
15,000 or greater	Once/Month

(*) *The amount of bulk sewage sludge applied to the land (dry weight basis).*

Representative samples of sewage sludge shall be collected and analyzed in accordance with the methods referenced in 30 TAC §312.7

SECTION II. REQUIREMENTS SPECIFIC TO BULK SEWAGE SLUDGE FOR APPLICATION TO THE LAND MEETING CLASS A or B PATHOGEN REDUCTION AND THE CUMULATIVE LOADING RATES IN TABLE 2, OR CLASS B PATHOGEN REDUCTION AND THE POLLUTANT CONCENTRATIONS IN TABLE 3

For those permittees meeting Class A or B pathogen reduction requirements and that meet the cumulative loading rates in Table 2 below, or the Class B pathogen reduction requirements and contain concentrations of pollutants below listed in Table 3, the following conditions apply:

A. Pollutant Limits

Table 2

Pollutant	Cumulative Pollutant Loading Rate (pounds per acre)*
Arsenic	36
Cadmium	35
Chromium	2677
Copper	1339
Lead	268
Mercury	15
Molybdenum	Report Only
Nickel	375
Selenium	89
Zinc	2500

Table 3

Pollutant	Monthly Average Concentration (milligrams per kilogram)*
Arsenic	41
Cadmium	39
Chromium	1200
Copper	1500
Lead	300
Mercury	17
Molybdenum	Report Only
Nickel	420
Selenium	36
Zinc	2800

*Dry weight basis

B. Pathogen Control

All bulk sewage sludge that is applied to agricultural land, forest, a public contact site, a reclamation site, shall be treated by either Class A or Class B pathogen reduction requirements as defined above in Section I.B.3.

C. Management Practices

1. Bulk sewage sludge shall not be applied to agricultural land, forest, a public contact site, or a reclamation site that is flooded, frozen, or snow-covered so that the bulk sewage sludge enters a wetland or other waters in the State.

2. Bulk sewage sludge not meeting Class A requirements shall be land applied in a manner which complies with the Management Requirements in accordance with 30 TAC §312.44.

3. Bulk sewage sludge shall be applied at or below the agronomic rate of the cover crop.

4. An information sheet shall be provided to the person who receives bulk sewage sludge sold or given away. The information sheet shall contain the following information:

   a. The name and address of the person who prepared the sewage sludge that is sold or given away in a bag or other container for application to the land.

   b. A statement that application of the sewage sludge to the land is prohibited except in accordance with the instruction on the label or information sheet.

   c. The annual whole sludge application rate for the sewage sludge application rate for the sewage sludge that does not cause any of the cumulative pollutant loading rates in Table 2 above to be exceeded, unless the pollutant concentrations in Table 3 found in Section II above are met.

D. Notification Requirements

1. If bulk sewage sludge is applied to land in a State other than Texas, written notice shall be provided prior to the initial land application to the permitting authority for the State in which the bulk sewage sludge is proposed to be applied. The notice shall include:

   a. The location, by street address, and specific latitude and longitude, of each land application site.

   b. The approximate time period bulk sewage sludge will be applied to the site.

   c. The name, address, telephone number, and National Pollutant Discharge Elimination System permit number (if appropriate) for the person who will apply the bulk sewage sludge.

2. The permittee shall give 180 days prior notice to the Executive Director in care of the Wastewater Permitting Section (MC 148) of the Water Quality Division of any change planned in the sewage sludge disposal practice.

E. Record keeping Requirements

The sludge documents will be retained at the facility site and/or shall be readily available for review by a TCEQ representative. The person who prepares bulk sewage sludge or a sewage sludge material shall develop the following information and shall retain the information at the facility site and/or shall be readily available for review by a TCEQ representative for a period of <u>five years</u>. If the permittee supplies the sludge to another person who land applies the sludge, the permittee shall notify the land applier of the requirements for record keeping found in 30 TAC §312.47 for persons who land apply.

1. The concentration (mg/kg) in the sludge of each pollutant listed in Table 3 above and the applicable pollutant concentration criteria (mg/kg), <u>or</u> the applicable cumulative pollutant loading rate and the applicable cumulative pollutant loading rate limit (lbs/ac) listed in Table 2 above.

2. A description of how the pathogen reduction requirements are met (including site restrictions for Class B sludges, if applicable).

3. A description of how the vector attraction reduction requirements are met.

4. A description of how the management practices listed above in Section II.C are being met.

5. The following certification statement:

   "I certify, under penalty of law, that the applicable pathogen requirements in 30 TAC §312.82(a) or (b) and the vector attraction reduction requirements in 30 TAC §312.83(b) have been met for each site on which bulk sewage sludge is applied. This determination has been made under my direction and supervision in accordance with the system designed to ensure that qualified personnel properly gather and evaluate the information used to determine that the management practices have been met. I am aware that there are significant penalties for false certification including fine and imprisonment."

6. The recommended agronomic loading rate from the references listed in Section II.C.3. above, as well as the actual agronomic loading rate shall be retained. The person who applies bulk sewage sludge or a sewage sludge material shall develop the following information and shall retain the information at the facility site and/or shall be readily available for review by a TCEQ representative <u>indefinitely</u>. If the permittee supplies the sludge to another person who land applies the sludge, the permittee shall notify the land applier of the requirements for record keeping found in 30 TAC §312.47 for persons who land apply:

a. A certification statement that all applicable requirements (specifically listed) have been met, and that the permittee understands that there are significant penalties for false certification including fine and imprisonment. See 30 TAC §312.47(a)(4)(A)(ii) or 30 TAC §312.47(a)(5)(A)(ii), as applicable, and to the permittee's specific sludge treatment activities.

b. The location, by street address, and specific latitude and longitude, of each site on which sludge is applied.

c. The number of acres in each site on which bulk sludge is applied.

d. The date and time sludge is applied to each site.

e. The cumulative amount of each pollutant in pounds/acre listed in Table 2 applied to each site.

f. The total amount of sludge applied to each site in dry tons.

The above records shall be maintained on-site on a monthly basis and shall be made available to the Texas Commission on Environmental Quality upon request.

F. Reporting Requirements

The permittee shall report annually to the TCEQ Regional Office (MC Region 12) and Water Quality Compliance Monitoring Team (MC 224) of the Enforcement Division, by September 1 of each year the following information:

1. Results of tests performed for pollutants found in either Table 2 or 3 as appropriate for the permittee's land application practices.

2. The frequency of monitoring listed in Section I.C. that applies to the permittee.

3. Toxicity Characteristic Leaching Procedure (TCLP) results.

4. Identity of hauler(s) and TCEQ transporter number.

5. PCB concentration in sludge in mg/kg.

6. Date(s) of disposal.

7. Owner of disposal site(s).

8. Texas Commission on Environmental Quality registration number, if applicable.

9. Amount of sludge disposal dry weight (lbs/acre) at each disposal site.

10. The concentration (mg/kg) in the sludge of each pollutant listed in Table 1 (defined as a monthly average) as well as the applicable pollutant concentration criteria (mg/kg) listed in Table 3 above, or the applicable pollutant loading rate limit (lbs/acre) listed in Table 2 above if it exceeds 90% of the limit.

11. Level of pathogen reduction achieved (Class A or Class B).

12. Alternative used as listed in Section I.B.3.(a. or b.). Alternatives describe how the pathogen reduction requirements are met. If Class B sludge, include information on how site restrictions were met.

13. Vector attraction reduction alternative used as listed in Section I.B.4.

14. Annual sludge production in dry tons/year.

15. Amount of sludge land applied in dry tons/year.

16. The certification statement listed in either 30 TAC §312.47(a)(4)(A)(ii) or 30 TAC §312.47(a)(5)(A)(ii) as applicable to the permittee's sludge treatment activities, shall be attached to the annual reporting form.

17. When the amount of any pollutant applied to the land exceeds 90% of the cumulative pollutant loading rate for that pollutant, as described in Table 2, the permittee shall report the following information as an attachment to the annual reporting form.

    a. The location, by street address, and specific latitude and longitude.

    b. The number of acres in each site on which bulk sewage sludge is applied.

    c. The date and time bulk sewage sludge is applied to each site.

    d. The cumulative amount of each pollutant (i.e., pounds/acre) listed in Table 2 in the bulk sewage sludge applied to each site.

    e. The amount of sewage sludge (i.e., dry tons) applied to each site.

    The above records shall be maintained on a monthly basis and shall be made available to the Texas Commission on Environmental Quality upon request.

SECTION III. REQUIREMENTS APPLYING TO ALL SEWAGE SLUDGE DISPOSED IN A MUNICIPAL SOLID WASTE LANDFILL

A. The permittee shall handle and dispose of sewage sludge in accordance with 30 TAC Chapter 330 and all other applicable state and federal regulations to protect public health and the environment from any reasonably anticipated adverse effects due to any toxic pollutants that may be present. The permittee shall ensure that the sewage sludge meets the requirements in 30 TAC Chapter 330 concerning the quality of the sludge disposed in a municipal solid waste landfill.

B. If the permittee generates sewage sludge and supplies that sewage sludge to the owner or operator of a municipal solid waste landfill (MSWLF) for disposal, the permittee shall provide to the owner or operator of the MSWLF appropriate information needed to be in compliance with the provisions of this permit.

C. The permittee shall give 180 days prior notice to the Executive Director in care of the Wastewater Permitting Section (MC 148) of the Water Quality Division of any change planned in the sewage sludge disposal practice.

D. Sewage sludge shall be tested once during the term of this permit in accordance with the method specified in both 40 CFR Part 261, Appendix II and 40 CFR Part 268, Appendix I (Toxicity Characteristic Leaching Procedure) or other method, which receives the prior approval of the TCEQ for contaminants listed in Table 1 of 40 CFR §261.24. Sewage sludge failing this test shall be managed according to RCRA standards for generators of hazardous waste, and the waste's disposition must be in accordance with all applicable requirements for hazardous waste processing, storage, or disposal.

Following failure of any TCLP test, the management or disposal of sewage sludge at a facility other than an authorized hazardous waste processing, storage, or disposal facility shall be prohibited until such time as the permittee can demonstrate the sewage sludge no longer exhibits the hazardous waste toxicity characteristics (as demonstrated by the results of the TCLP tests). A written report shall be provided to both the TCEQ Registration and Reporting Section (MC 129) of the Registration, Review, and Reporting Division and the Regional Director (MC Region 12) of the appropriate TCEQ field office within 7 days after failing the TCLP Test.

The report shall contain test results, certification that unauthorized waste management has stopped and a summary of alternative disposal plans that comply with RCRA standards for the management of hazardous waste. The report shall be addressed to: Director, Registration, Review, and Reporting Division (MC 129), Texas Commission on Environmental Quality, P. O. Box 13087, Austin, Texas 78711-3087. In addition, the permittee shall prepare an annual report on the results of all sludge toxicity testing. This annual report shall be submitted to the TCEQ Regional Office (MC Region 12) and the Water Quality Compliance Monitoring Team (MC 224) of the Enforcement Division by September 1 of each year.

E. Sewage sludge shall be tested as needed, in accordance with the requirements of 30 TAC Chapter 330.

F. Record keeping Requirements

The permittee shall develop the following information and shall retain the information for five years.

1. The description (including procedures followed and the results) of all liquid Paint Filter Tests performed.

2. The description (including procedures followed and results) of all TCLP tests performed.

The above records shall be maintained on-site on a monthly basis and shall be made available to the Texas Commission on Environmental Quality upon request.

G. Reporting Requirements

The permittee shall report annually to the TCEQ Regional Office (MC Region 12) and Water Quality Compliance Monitoring Team (MC 224) of the Enforcement Division by September 1 of each year the following information:

1. Toxicity Characteristic Leaching Procedure (TCLP) results.
2. Annual sludge production in dry tons/year.
3. Amount of sludge disposed in a municipal solid waste landfill in dry tons/year.
4. Amount of sludge transported interstate in dry tons/year.
5. A certification that the sewage sludge meets the requirements of 30 TAC Chapter 330 concerning the quality of the sludge disposed in a municipal solid waste landfill.
6. Identity of hauler(s) and transporter registration number.
7. Owner of disposal site(s).
8. Location of disposal site(s).
9. Date(s) of disposal.

The above records shall be maintained on-site on a monthly basis and shall be made available to the Texas Commission on Environmental Quality upon request.

OTHER REQUIREMENTS

1. The permittee shall employ or contract with one or more licensed wastewater treatment facility operators or wastewater system operations companies holding a valid license or registration according to the requirements of 30 TAC Chapter 30, Occupational Licenses and Registrations and in particular 30 TAC Chapter 30, Subchapter J, Wastewater Operators and Operations Companies.

   This Category C facility must be operated by a chief operator or an operator holding a Category C license or higher. The facility must be operated a minimum of five days per week by the licensed chief operator or an operator holding the required level of license or higher. The licensed chief operator or operator holding the required level of license or higher must be available by telephone or pager seven days per week. Where shift operation of the wastewater treatment facility is necessary, each shift which does not have the on-site supervision of the licensed chief operator must be supervised by an operator in charge who is licensed not less than one level below the category for the facility.

2. The facility is not located in the Coastal Management Program boundary.

3. The permittee is hereby placed on notice that this permit may be reviewed by the TCEQ after the completion of any new intensive water quality survey on Segment No. 1002 of the San Jacinto River Basin and any subsequent updating of the water quality model for Segment No. 1002, in order to determine if the limitations and conditions contained herein are consistent with any such revised model. The permit may be amended, pursuant to 30 TAC §305.62, as a result of such review. The permittee is also hereby placed on notice that effluent limits may be made more stringent at renewal based on, for example, any change to modeling protocol approved in the TCEQ Continuing Planning Process.

4. The permittee shall comply with the requirements of 30 TAC Section 309.13 (a) through (d). In addition, by ownership of the required buffer zone area, the permittee shall comply with the requirements of 30 TAC Section 309.13(e). Issuance of the permit on January 17, 1997 granted the permittee a buffer zone variance. (See Attachment A). This permit continues the variance to the Buffer Zone Requirements granted with the permit issued on January 17, 1997.

5. The permittee shall provide facilities for the protection of its wastewater treatment facilities from a 100-year flood.

6. In addition, the permittee is also authorized to haul sludge from the wastewater treatment facility, by a licensed hauler, to the City of Houston Wastewater Treatment Facilities, to be treated and then disposed of with the sludge from the plant accepting the sludge.

   The permittee shall keep records of all sludge removed from the wastewater treatment plant site and these records shall include the following information:

   a. The volume of sludge hauled;
   b. The date(s) that sludge was hauled;
   c. The identity of haulers; and
   d. The permittee, TCEQ permit number, and location of the wastewater treatment plant to which the sludge is hauled.

   These records shall be maintained on a monthly basis and shall be reported to the TCEQ Regional Office (MC Region 12) and the TCEQ Water Quality Compliance Monitoring Team (MC 224) of the Enforcement Division by September 1 of each year.

CONTRIBUTING INDUSTRIES AND PRETREATMENT REQUIREMENTS

1. The permittee shall operate an industrial pretreatment program in accordance with Sections 402(b)(8) and (b)(9) of the Clean Water Act, the General Pretreatment Regulations (40 CFR Part 403) and the approved City of Houston POTW pretreatment program submitted by the permittee. The pretreatment program was approved on **November 27, 1984**, and modified on **February 26, 1993.** The legal authority and the POTW's pretreatment program are not in compliance with the current 40 CFR Part 403 regulations *[rev. Federal Register/ Vol. 70/ No. 198/ Friday, October 14, 2005/ Rules and Regulations, pages 60134-60798]* and the 30 TAC Chapter 315, as amended. In order to ensure that the permittee has a program to assure compliance with such pretreatment standards and requirements, the permittee shall submit a modification to their pretreatment program containing all required [*i.e.* more stringent] Streamlining Rule provisions to the Executive Director care of the Storm Water & Pretreatment Team (MC148) of the Water Quality Division within **six (6) months** of the issued date of the next permit action of TPDES Permit No. **WQ0010495090**. The POTW pretreatment program is hereby incorporated by reference and shall be implemented in a manner consistent with the following requirements:

   a. Industrial user (IU) information shall be kept current according to 40 CFR §§403.8(f)(2)(i) and (ii) and updated at a frequency set forth in the approved pretreatment program to reflect accurate characterization of all IUs;

   b. The frequency and nature of IU compliance monitoring activities by the permittee shall be consistent with the approved POTW pretreatment program and commensurate with the character, consistency, and volume of waste. The permittee is required to inspect and sample the effluent from each significant industrial user (SIU) at least once per year, except as specified in 40 CFR §403.8 (f)(2)(v). This is in addition to any industrial self-monitoring activities;

   c. The permittee shall enforce and obtain remedies for IU noncompliance with applicable pretreatment standards and requirements and the approved POTW pretreatment program;

   d. The permittee shall control through permit, order, or similar means, the contribution to the POTW by each IU to ensure compliance with applicable pretreatment standards and requirements and the approved POTW pretreatment program. In the case of SIUs (identified as significant under 40 CFR §403.3 (v)), this control shall be achieved through individual or general control mechanisms, in accordance with 40 CFR §403.8(f)(1)(iii).

      Both individual and general control mechanisms must be enforceable and contain, at a minimum, the following conditions:

      (1) Statement of duration (in no case more than five years);
      (2) Statement of non-transferability without, at a minimum, prior notification to the POTW and provision of a copy of the existing control mechanism to the new owner or operator;
      (3) Effluent limits, which may include enforceable best management practices (BMPs), based on applicable general pretreatment standards, categorical pretreatment standards, local limits, and State and local law;
      (4) Self-monitoring, sampling, reporting, notification and record keeping requirements, identification of the pollutants to be monitored (including, if applicable, the process for seeking a waiver for a pollutant neither present nor expected to be present in the IU's discharge in accordance with 40 CFR §403.12(e)(2), or a specific waived pollutant in the case of an individual control mechanism), sampling location, sampling frequency, and sample type, based on the applicable general pretreatment standards in 40 CFR Part 403, categorical pretreatment standards, local limits, and State and local law;
      (5) Statement of applicable civil and criminal penalties for violation of pretreatment standards and requirements, and any applicable compliance schedule. Such schedules may not extend the compliance date beyond federal deadlines; and;

(6) Requirements to control slug discharges, if determined by the POTW to be necessary.

e. In order to implement 40 CFR §403.8(f)(1)(iii)(A)(2), a monitoring waiver for a pollutant neither present nor expected to be present in the IU's discharge is not effective in the general control mechanism until after the POTW has provided written notice to the SIU that such a waiver request has been granted in accordance with 40 CFR §403.12(e)(2).

f. The permittee shall evaluate whether each SIU needs a plan or other action to control slug discharges, in accordance with 40 CFR §403.8(f)(2)(vi). If the POTW decides that a slug control plan is needed, the plan shall contain at least the minimum elements required in 40 CFR §403.8(f)(2)(vi);

g. The permittee shall provide adequate staff, equipment, and support capabilities to carry out all elements of the pretreatment program; and,

h. The approved program shall not be modified by the permittee without the prior approval of the Executive Director care of the Storm Water & Pretreatment Team (MC148) of the Water Quality Division, according to 40 CFR §403.18.

2. The permittee is under a continuing duty to: establish and enforce specific local limits to implement the provisions of 40 CFR §403.5, develop and enforce local limits as necessary, and modify the approved pretreatment program as necessary to comply with federal, state and local law, as amended. The permittee may develop BMPs to implement paragraphs 40 CFR §§403.5(c)(1) and (c)(2). Such BMPs shall be considered local limits and pretreatment standards.

The permittee is required to effectively enforce such limits and to modify their pretreatment program, including the Legal Authority, Enforcement Response Plan and/or Standard Operating Procedures, if required by the Executive Director to reflect changing conditions at the POTW. Substantial modifications will be approved in accordance with 40 CFR §403.18, and modifications will become effective upon approval by the Executive Director in accordance with 40 CFR §403.18.

Upon approval by the Executive Director of the substantial modification to this approved POTW pretreatment program, the requirement to develop and enforce specific prohibitions and/or limits to implement the prohibitions and limits set forth in 40 CFR §§403.5 (a)(1), (b), (c)(1) and (3), and (d) is a condition of this permit. The specific prohibitions set out in 40 CFR §403.5(b) shall be enforced by the permittee unless modified under this provision.

3. The permittee shall prepare annually a list of IUs which during the preceding twelve (12) months were in significant noncompliance (SNC) with applicable pretreatment requirements. For the purposes of this section of the permit, "CONTRIBUTING INDUSTRIES AND PRETREATMENT REQUIREMENTS", SNC shall be determined based upon the more stringent of either criteria established at 40 CFR §403.8(f)(2)(viii) *[rev. 10/14/05]* or criteria established in the approved POTW pretreatment program. This list is to be published annually during the month of **November** in a newspaper of general circulation that provides meaningful public notice within the jurisdiction(s) served by the POTW.

In addition, each **November** the permittee shall submit an updated pretreatment program annual status report, in accordance with 40 CFR §403.12(i), to the TCEQ Storm Water & Pretreatment Team (MC148) of the Water Quality Division. The report shall contain the following information as well as the information on the attached tables in this section. The report summary shall be submitted on the Pretreatment Performance Summary (PPS) form [TCEQ-20218].

a. An updated list of all regulated IUs as indicated in this section. For each listed IU, the following information shall be included:

(1) Standard Industrial Classification (SIC) or North American Industry Classification System (NAICS) code and categorical determination;

(2) If the pretreatment program has been modified and approved to incorporate reduced monitoring for any of the categorical IUs as provided by 40 CFR Part 403 *[rev. 10/14/05]*, then the list must also identify:
* categorical IUs subject to the conditions for reduced monitoring and reporting requirements under 40 CFR §§ 403.12(e)(1) and (3);
* those IUs that are non-significant categorical industrial users (NSCIUs) under 40 CFR §403.3(v)(2); and
* those IUs that are middle tier categorical industrial users (MTCIUs) under 40 CFR §403.12(e)(3).

(3) Control mechanism status.
* Indicate whether the IU has an effective individual or general control mechanism, and the date such document was last issued, reissued, or modified;
* Indicate which IUs were added to the system, or newly identified, during the pretreatment year reporting period;
* Include the type of general control mechanisms; and
* Report all NSCIU annual evaluations performed, as applicable.

(4) A summary of all compliance monitoring activities performed by the POTW during the pretreatment year reporting period. The following information shall be reported:
* Total number of inspections performed; and
* Total number of sampling events conducted.

(5) Status of IU compliance with effluent limitations, reporting, and narrative standard (which may include enforceable BMPs, narrative limits, and/or operational standards) requirements. Compliance status shall be defined as follows:
* Compliant (C) - no violations during the pretreatment year reporting period;
* Non-compliant (NC) - one or more violations during the pretreatment year reporting period but does not meet the criteria for SNC; and
* Significant Noncompliance (SNC) - in accordance with requirements described above in this section.

(6) For noncompliant IUs, indicate the nature of the violations, the type and number of actions taken (notice of violation, administrative order, criminal or civil suit, fines or penalties collected, etc.) and current compliance status. If any IU was on a schedule to attain compliance with effluent limits or narrative standards, indicate the date the schedule was issued and the date compliance is to be attained.

b. A list of each IU whose authorization to discharge was terminated or revoked during the pretreatment year reporting period and the reason for termination.

c. A report on any interference, pass through, upset, or POTW permit violations known or suspected to be caused by IUs and response actions taken by the permittee

d. An original newspaper public notice, or copy of the newspaper publication with official affidavit, of the list of significantly noncompliant IUs, giving the name of the newspaper and the date the list was published.

e. The information required by this section including the information on the attached tables must be submitted. The permittee may submit the information in tabular form using the example table format provided. Please attach on a separate sheet those explanations to document various pretreatment activities, including IU permits that have expired, BMP violations, and required sampling events not conducted by the permittee as required.

f. A summary of changes to the POTW's pretreatment program that have not been previously reported to the Approval Authority.

4. The permittee shall provide adequate written notification to the Executive Director care of the Storm Water & Pretreatment Team (MC148) of the Water Quality Division, within 30 days of the permittee's knowledge of the following:

a. Any new introduction of pollutants into the treatment works from an indirect discharger which would be subject to Sections 301 and 306 of the Clean Water Act if the indirect discharger was directly discharging those pollutants; and

b. Any substantial change in the volume or character of pollutants being introduced into the treatment works by a source introducing pollutants into the treatment works at the time of issuance of the permit.

Adequate notice shall include information on the quality and quantity of effluent to be introduced into the treatment works, and any anticipated impact of the change on the quality or quantity of effluent to be discharged from the POTW.

Revised July 2007

TPDES Pretreatment Program Annual Report Form for Updated Industrial Users List

Reporting month/year: _____, ____ to _____, ____

TPDES Permit No.: _____ Permittee:_____ Treatment Plant: _____

PRETREATMENT PROGRAM STATUS REPORT UPDATED INDUSTRIAL USERS[1] LIST																
Industrial User Name	SIC or NAICS Code	CIU[2]	CONTROL MECHANISM				New User[3] Y or N	Times Inspected by the CA	Times Sampled by the CA	COMPLIANCE STATUS During the Pretreatment Year Reporting Period[4] (C = Compliant, NC = Noncompliant, SNC= Significant Noncompliance)						
										REPORTS				Certifications	Effluent Limits	Narrative Standards
			Y/N or NR[5]	IND or GEN or NR	Last Action[6]	TBLLs or TBLLs only[7]				BMR	90-Day	Semi-Annual	Self-Monitoring[8]	NSCIU		

1 Include all significant industrial users (SIUs), non-significant categorical industrial users (NSCIUs) as defined in 40 CFR §403.3(v)(2), and/or middle tier categorical industrial users (MTCIUs) as defined in 40 CFR §403.12(e)(3). Please do not include non-significant noncategorical IUs that are covered under best management practices (BMPs) or general control mechanisms.

2 Categorical determination (Include 40 CFR citation and NSCIU or MTCIU status, if applicable).

3 Indicate whether the IU is a new user. If the answer is No or N, then indicate the expiration date of the last issued IU permit.

4 The term SNC applies to a broader range of violations, such as daily maximum, long-term average, instantaneous limits, and narrative standards (which may include enforceable BMPs, narrative limits and/or operational standards). Any other violation, or group of violations, which the POTW determines will adversely affect the operation or implementation of the local Pretreatment Program now includes BMP violations (40 CFR §403.8(f)(2)(viii)(H)).

5 Code NR= None required (NSCIUs only); IND = individual control mechanism; GEN = general control mechanism. Include as a footnote (or on a separate page) the name of the general control mechanism used for similar groups of IUs, identify the similar types of operations and types of wastes that are the same for each general control mechanism. Any BMPs through general control mechanisms that are applied to nonsignificant IUs need to be reported separately, *e.g.* the sector type and BMP description.

6 Permit or NSCIU evaluations as applicable.

7 Indicate whether the IU is subject to: 1) technically based local limits (TBLLs) that are more stringent than categorical pretreatment standards; or 2) subject only to local limits (TBLLs only) .

8 For those IUs where a monitoring waiver has been granted, please add the code "W" (after either C, NC, or SNC codes) and indicate the pollutant(s) for which the waiver has been granted.

TPDES Pretreatment Program Annual Report Form
for Industrial User Inventory Modifications

Reporting month/year: _____, ____ to _____, ____

TPDES Permit No.:_____ Permittee: _____ Treatment Plant: _____

INDUSTRIAL USER INVENTORY MODIFICATIONS					
FACILITY NAME, ADDRESS AND CONTACT PERSON	ADD, CHANGE, DELETE (Including Categorical Reclassification to NSCIU Or MTCIU)	IF DELETION: Reason For Deletion	IF ADDITION OR SIGNIFICANT CHANGE:		
			PROCESS DESCRIPTION	POLLUTANTS (Including any sampling waiver given for each pollutant not present)	FLOW RATE[8] (In Gallons Per Day) R = Regulated U = Unregulated T = Total

[8] For NSCIUs, total flow must be given, if regulated flow is not determined.

TPDES Pretreatment Program Annual Report Form for Enforcement Actions Taken

Reporting month/year: _____, ____ to _____, ____

TPDES Permit No.: _____ Permittee: _____Treatment Plant: _____ Overall % SNC_____

SNC[9] based on: Effluent Violations____% Reporting Violations___% Narrative Standard Violations____%

Noncompliant Industrial Users - Enforcement Actions Taken															
INDUSTRIAL USER NAME	NATURE OF VIOLATION[10]				NUMBER OF ACTIONS TAKEN					PENALTIES COLLECTED (Do not Include Surcharge)	COMPLIANCE SCHEDULE			CURRENT STATUS Returned to Compliance: Yes or No	COMMENTS
	Effluent Limits	Reports	NSCIU Certifications	Narrative Standards	NOV	A.O.	Civil	Criminal	Other		Y/N	Date Issued	Date Due		

9 # %
__ __ Pretreatment Standards [WENDB-PSNC] (Local Limits/Categorical Standards)
__ __ Reporting Requirements [WENDB-PSNC]
__ __ Narrative Standards

10 Please specify a separate number for each type of violation, *e.g.* report, notification, and/or NSCIU certification.

Attachment "A"

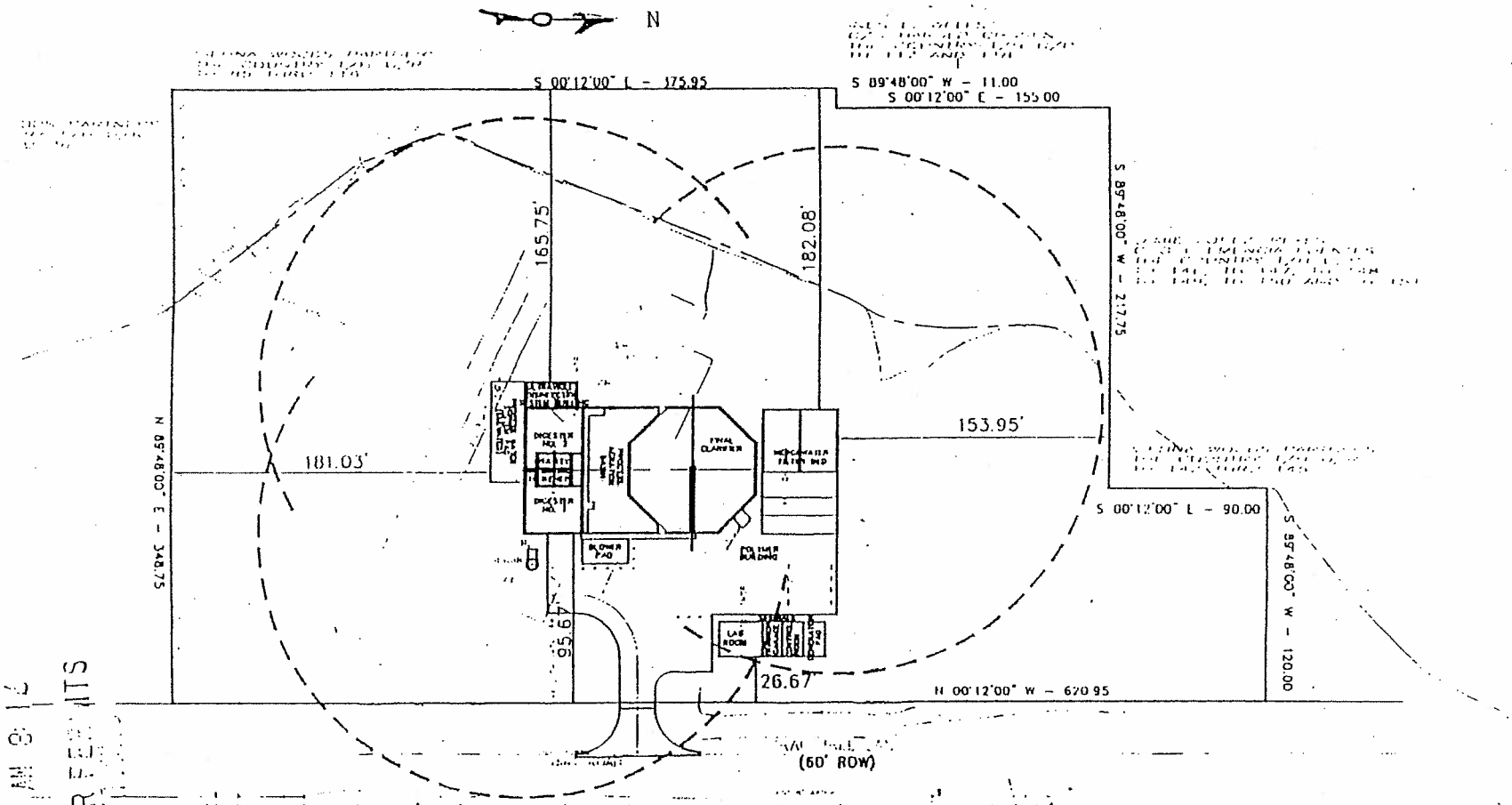

Attachment "A"

EXHIBIT 6

AREA SERVED BY WWTP (DISTRICT MAP)
WWTP BOUNDARIES
DATE: JULY 1996
[illegible]

Permit No. 10495-149

150' BUFFER ZONES

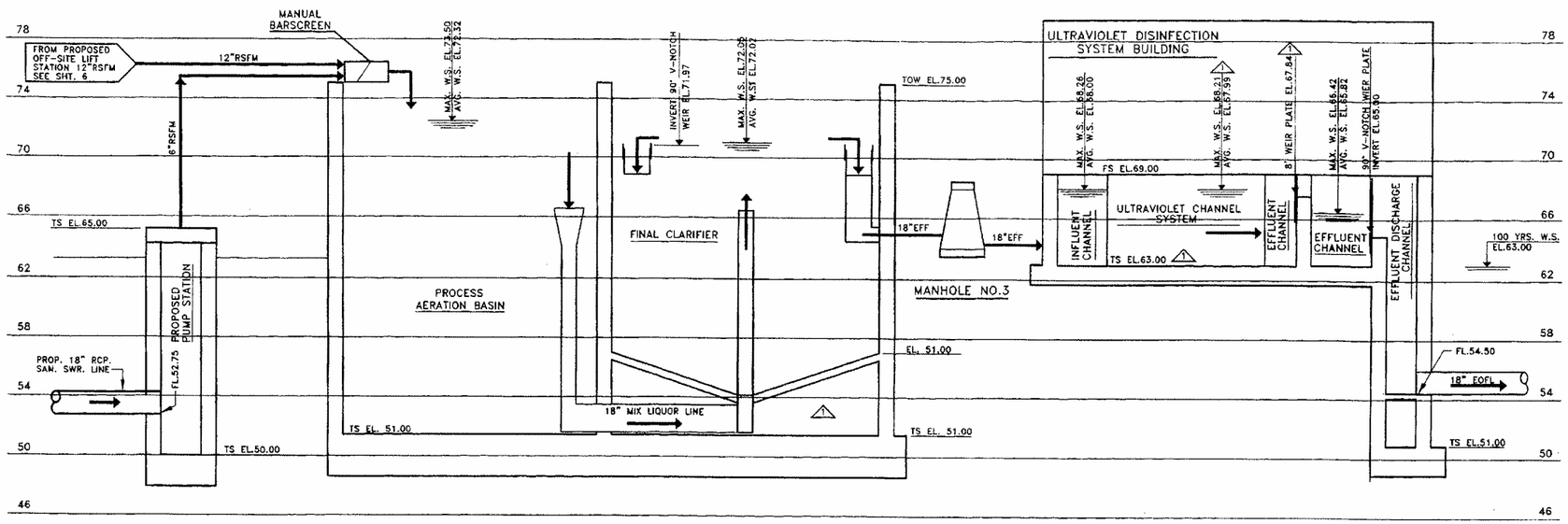

HYDRAULIC PROFILE

LEGEND:

AHSL	AIR HEADER SUPPLY LINE
ALP	AIRLIFT PUMP
ARAS	AUXILIARY RETURN ACTIVATED SLUDGE LINE
ARASALP	AUXILIARY RETURN ACTIVATED SLUDGE AIRLIFT PUMP
ASL	AIR SUPPLY LINE
BF	BUTTERFLY VALVE
CB	CENTRIFUGAL BLOWER
COMP	CORRUGATED GALVANIZED METAL PIPE
DWSL	DIGESTED WASTE SLUDGE LINE
DWSP	DIGESTED WASTE SLUDGE PUMP
DWSS	DIGESTED WASTE SLUDGE SUCTION LINE
EFF	EFFLUENT LINE
EOFL	EFFLUENT OVERFLOW LINE
FL	FLOW LINE ELEVATION
INF	GALV. STL. INLET BAFFLE
ML	MIXED LIQUOR LINE
PV	PLUG VALVE
RASALP	RETURN ACTIVATED SLUDGE AIRLIFT PUMP
RSFM	RAW SEWAGE FORCE MAIN
SALP	SCUM AIRLIFT PUMP
SCL	SCUM LINE
SNL	SUPERNATANT LINE
ST	GALV. STL. SHEAR TUBE W/MS DIFFUSER
TD	THICKENER DRIVE
TSCALP	THICKENER SCUM AIRLIFT PUMP
TWASALP	THICKENED WASTE SLUDGE AIRLIFT PUMP
WFB	WEDGEWATER FILTER BED
RAS	RETURN ACTIVATE SLUDGE LINE
WAS	WASTE SLUDGE LINE
→	DIRECTION OF FLOW ARROW

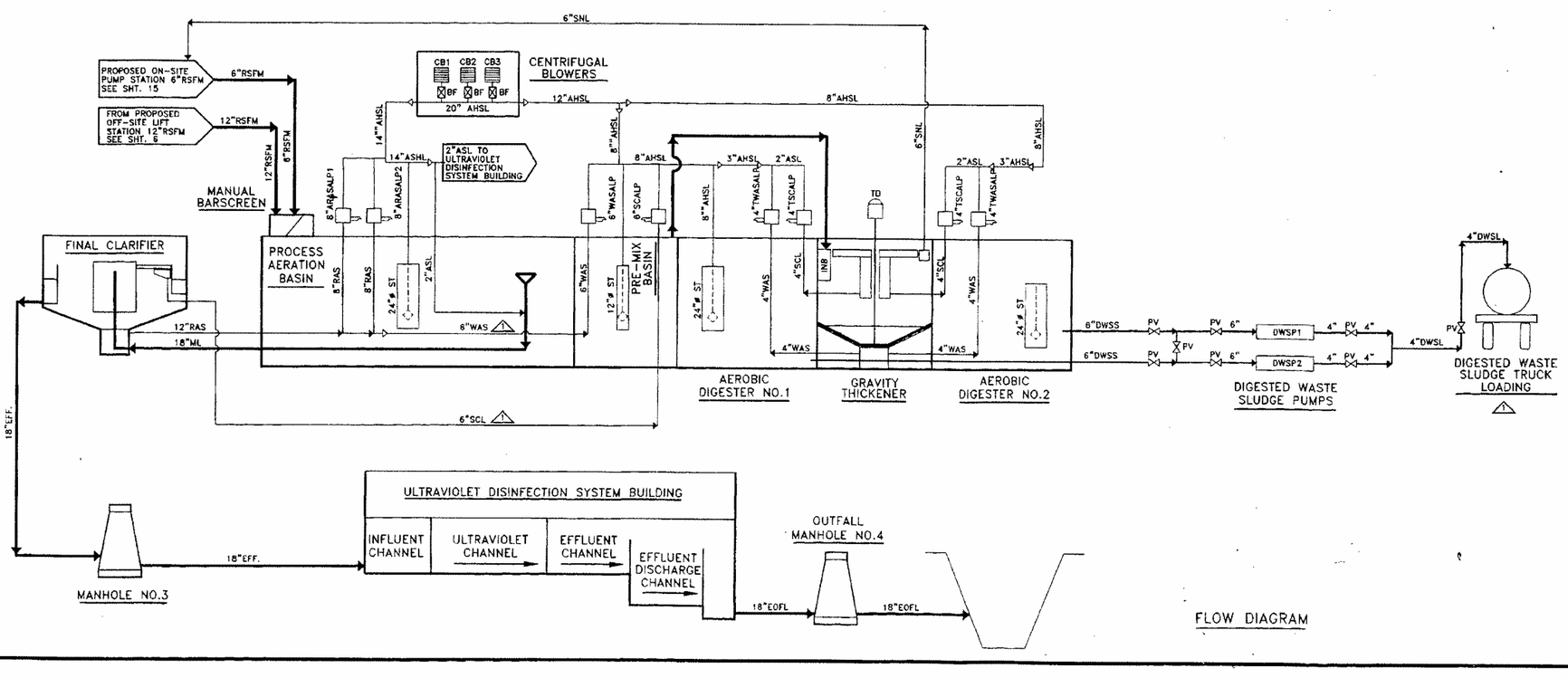

FLOW DIAGRAM

NO.	DATE	REVISION	APPROV
1	3/12/97	C.O. NO.1	DLS

STATE OF TEXAS — D.L. SHERWOOD — 28005 — REGISTERED ENGINEER — 5/22/97

georgia a. wilson & associates inc.
Consulting Engineers & Planners
5718 Westheimer, Suite 1000 Houston, Texas (713) 787-6070

FOREST COVE MUD
CONSTRUCTION OF NEW 0.95 MGD
WASTEWATER TREATMENT PLANT

FLOW DIAGRAM
AND
HYDRAULIC PROFILE

CITY OF HOUSTON
DEPARTMENT OF PUBLIC WORKS AND ENGINEERING
ENGINEERING, CONSTRUCTION AND REAL ESTATE GROUP

SECTION APPROVALS

WATER ENGINEERING — TRAFFIC AND SIGNAL ENGINEERING
WASTEWATER ENGINEERING 5/6/97 — STREET & BRIDGE ENGINEERING
STORM SEWER ENGINEERING — CONSTRUCTION 5/8/97

OTHER DEPARTMENTS

PLANNING & DEVELOPMENT — SPONSOR DEPARTMENT
CITY ENGINEER — DATE: 5/15/97
DIRECTOR OF PUBLIC WORKS AND ENGINEERING — DATE: 5-23-97

SUBMITTED:
SCALE: NTS
DATE: JULY, 1996
SURVEY BY:
F.B. NO.

DESIGNED BY: MM
DRAWN: AR
SHEET NO. 12 OF 62 SHEETS
CITY DWG. NO.: 33942

FC\FDHP4812

FOREST COVE W.W.T.P.

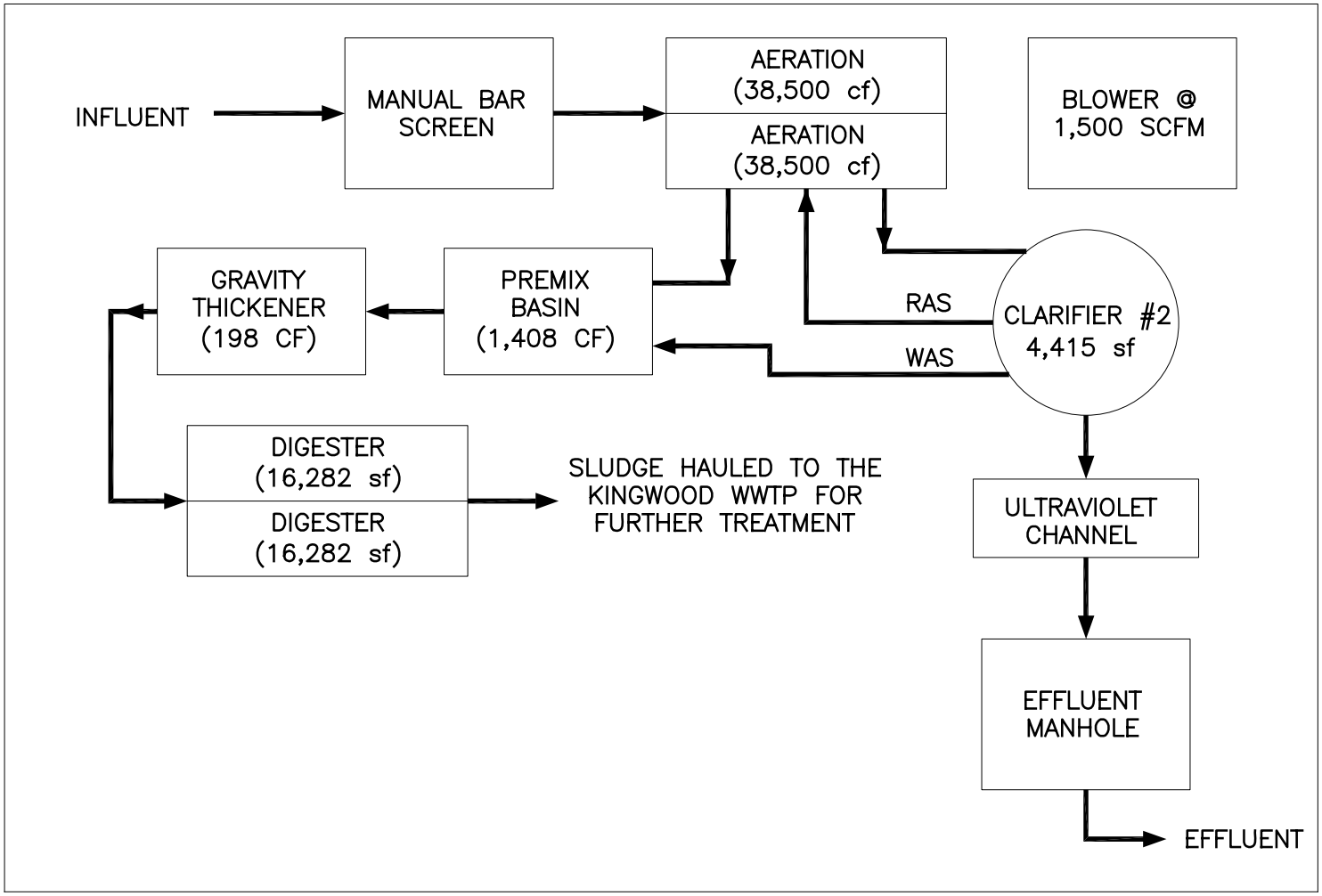

MAJOR UNIT CAPACITIES

Unit		Capacity
Blowers	(Firm)	1.5 mgd
	(Total)	2.25 mgd
Aeration Basin		1.62 mgd
Secondary Clarifier	(Design)	1.2 mgd
	(2Hr Peak)	4.6 mgd

PERMITTED FLOW

Daily Average	0.95 mgd
2 – hours Peak	3.77 mgd

NOVEMBER 2002

K:\Projects\Hi1\CityofHoustonPermits\WWTP\FOREST–cove.dwg

APPENDIX C

DISCHARGE PERMIT AND PROCESS DIAGRAM

KINGWOOD WEST WWTP

TPDES PERMIT NO. WQ0010495142
[For TCEQ office use only -
EPA I.D. No. TX0088501]

TEXAS COMMISSION ON ENVIRONMENTAL QUALITY
P.O. Box 13087
Austin, Texas 78711-3087

This amendment supersedes and replaces TPDES Permit No. WQ0010495142 issued June 22, 2005.

PERMIT TO DISCHARGE WASTES
under provisions of
Section 402 of the Clean Water Act
and Chapter 26 of the Texas Water Code

City of Houston

whose mailing address is

Department of Public Works and Engineering
4545 Groveway Drive
Houston, Texas 77087

is authorized to treat and discharge wastes from the Kingwood West Wastewater Treatment Facility, SIC Code 4952

located at 26808 Sorters Road, approximately 250 feet south of River Ridge Drive and 0.75 mile west of U.S. Highway 59 in Montgomery County, Texas

to an unnamed ditch; thence to Evans Gully; thence to the West Fork San Jacinto River in Segment No. 1004 of the San Jacinto River Basin

only according with effluent limitations, monitoring requirements and other conditions set forth in this permit, as well as the rules of the Texas Commission on Environmental Quality (TCEQ), the laws of the State of Texas, and other orders of the TCEQ. The issuance of this permit does not grant to the permittee the right to use private or public property for conveyance of wastewater along the discharge route described in this permit. This includes, but is not limited to, property belonging to any individual, partnership, corporation, or other entity. Neither does this permit authorize any invasion of personal rights nor any violation of federal, state, or local laws or regulations. It is the responsibility of the permittee to acquire property rights as may be necessary to use the discharge route.

This permit shall expire at midnight, **July 1, 2013**.

ISSUED DATE: SEP 02 2008

For the Commission

INTERIM I EFFLUENT LIMITATIONS AND MONITORING REQUIREMENTS Outfall Number 001

1. During the period beginning upon the date of issuance and lasting through the completion of expansion of facilities to 0.528 million gallons per day (MGD), the permittee is authorized to discharge subject to the following effluent limitations:

   The daily average flow of effluent shall not exceed 0.378 MGD; nor shall the average discharge during any two-hour period (2-hour peak) exceed 788 gallons per minute (gpm).

Effluent Characteristic	Discharge Limitations				Minimum Self-Monitoring Requirements	
	Daily Avg.	7-day Avg.	Daily Max.	Single Grab	Report Daily Avg. & Max.	Single Grab
	mg/l(lbs/day)	mg/l	mg/l	mg/l	Measurement Frequency	Sample Type
Flow, MGD	Report	N/A	Report	N/A	Five/week	Instantaneous
Carbonaceous Biochemical Oxygen Demand (5-day)	10 (32)	15	25	35	One/week	Grab
Total Suspended Solids	15 (47)	25	40	60	One/week	Grab
Ammonia Nitrogen	3 (9.5)	6	10	15	One/week	Grab
E. coli bacteria Colonies per 100 ml	126	N/A	N/A	394	One/week	Grab

2. The effluent shall contain a chlorine residual of at least 1.0 mg/l and shall not exceed a chlorine residual of 4.0 mg/l after a detention time of at least 20 minutes (based on peak flow), and shall be monitored five times per week by grab sample. An equivalent method of disinfection may be substituted only with prior approval of the Executive Director.

3. The pH shall not be less than 6.0 standard units nor greater than 9.0 standard units and shall be monitored once per month by grab sample.

4. There shall be no discharge of floating solids or visible foam in other than trace amounts and no discharge of visible oil.

5. Effluent monitoring samples shall be taken at the following location(s): Following the final treatment unit.

6. The effluent shall contain a minimum dissolved oxygen of 6.0 mg/l and shall be monitored once per week by grab sample.

INTERIM II EFFLUENT LIMITATIONS AND MONITORING REQUIREMENTS

Outfall Number 001

1. During the period beginning upon the completion of expansion of facilities to 0.528 million gallons per day (MGD) and lasting through the completion of expansion of facilities to 2.0 MGD, the permittee is authorized to discharge subject to the following effluent limitations:

   The daily average flow of effluent shall not exceed 0.528 MGD; nor shall the average discharge during any two-hour period (2-hour peak) exceed 1,204 gallons per minute (gpm).

Effluent Characteristic	Discharge Limitations				Minimum Self-Monitoring Requirements Report Daily Avg. & Daily Max.	
	Daily Avg. mg/l(lbs/day)	7-day Avg. mg/l	Daily Max. mg/l	Single Grab mg/l	Measurement Frequency	Sample Type
Flow, MGD	Report	N/A	Report	N/A	Continuous	Totalizing meter
Carbonaceous Biochemical Oxygen Demand (5-day)	10 (44)	15	25	35	One/week	Composite
Total Suspended Solids	15 (66)	25	40	60	One/week	Composite
Ammonia Nitrogen	3 (13)	6	10	15	One/week	Composite
E. coli bacteria Colonies per 100 ml	126	N/A	394	N/A	One/week	Grab

2. The effluent shall contain a chlorine residual of at least 1.0 mg/l and shall not exceed a chlorine residual of 4.0 mg/l after a detention time of at least 20 minutes (based on peak flow), and shall be monitored daily by grab sample. An equivalent method of disinfection may be substituted only with prior approval of the Executive Director.

3. The pH shall not be less than 6.0 standard units nor greater than 9.0 standard units and shall be monitored twice per month by grab sample.

4. There shall be no discharge of floating solids or visible foam in other than trace amounts and no discharge of visible oil.

5. Effluent monitoring samples shall be taken at the following location(s): Following the final treatment unit.

6. The effluent shall contain a minimum dissolved oxygen of 6.0 mg/l and shall be monitored once per week by grab sample.

FINAL EFFLUENT LIMITATIONS AND MONITORING REQUIREMENTS Outfall Number 001

1. During the period beginning upon the completion of expansion of facilities to 2.0 million gallons per day (MGD) and lasting through the date of expiration, the permittee is authorized to discharge subject to the following effluent limitations:

   The annual average flow of effluent shall not exceed 2.0 MGD; nor shall the average discharge during any two-hour period (2-hour peak) exceed 5,556 gallons per minute (gpm).

Effluent Characteristic	Discharge Limitations				Minimum Self-Monitoring Requirements	
	Daily Avg.	7-day Avg.	Daily Max.	Single Grab	Report Daily Avg. & Daily Max.	
	mg/l(lbs/day)	mg/l	mg/l	mg/l	Measurement Frequency	Sample Type
Flow, MGD	Report	N/A	Report	N/A	Continuous	Totalizing Meter
Carbonaceous Biochemical Oxygen Demand (5-day)	10 (167)	15	25	35	Two/week	Composite
Total Suspended Solids	15 (250)	25	40	60	Two/week	Composite
Ammonia Nitrogen	3 (50)	6	10	15	Two/week	Composite
E. coli bacteria Colonies per 100 ml	126	N/A	394	N/A	One/week	Grab

2. The effluent shall contain a chlorine residual of at least 1.0 mg/l after a detention time of at least 20 minutes (based on peak flow) and shall be monitored daily by grab sample. The permittee shall dechlorinate the chlorinated effluent to less than 0.1 mg/l chlorine residual and shall monitor chlorine residual daily by grab sample after the dechlorination process. An equivalent method of disinfection may be substituted only with prior approval of the Executive Director.
3. The pH shall not be less than 6.0 standard units nor greater than 9.0 standard units and shall be monitored once per week by grab sample.
4. There shall be no discharge of floating solids or visible foam in other than trace amounts and no discharge of visible oil.
5. Effluent monitoring samples shall be taken at the following location(s): $CBOD_5$, TSS, NH_3-N and chlorine residual shall be taken after obtaining a 20-minute detention time in the chlorination basin and prior to dechlorination. Dissolved oxygen, chlorine residual and pH shall be taken after the final treatment unit.
6. The effluent shall contain a minimum dissolved oxygen of 6.0 mg/l and shall be monitored twice per week by grab sample.
7. The annual average flow and maximum 2-hour peak flow shall be reported monthly.

DEFINITIONS AND STANDARD PERMIT CONDITIONS

As required by Title 30 Texas Administrative Code (TAC) Chapter 305, certain regulations appear as standard conditions in waste discharge permits. 30 TAC §§305.121 - 305.129 (relating to Permit Characteristics and Conditions) as promulgated under the Texas Water Code (TWC) §§5.103 and 5.105, and the Texas Health and Safety Code (THSC) §§361.017 and 361.024(a), establish the characteristics and standards for waste discharge permits, including sewage sludge, and those sections of 40 Code of Federal Regulations (CFR) Part 122 adopted by reference by the Commission. The following text includes these conditions and incorporates them into this permit. All definitions in TWC §26.001 and 30 TAC Chapter 305 shall apply to this permit and are incorporated by reference. Some specific definitions of words or phrases used in this permit are as follows:

1. Flow Measurements

   a. Annual average flow - the arithmetic average of all daily flow determinations taken within the preceding 12 consecutive calendar months. The annual average flow determination shall consist of daily flow volume determinations made by a totalizing meter, charted on a chart recorder, and limited to major domestic wastewater discharge facilities with a one million gallons per day or greater permitted flow.

   b. Daily average flow - the arithmetic average of all determinations of the daily flow within a period of one calendar month. The daily average flow determination shall consist of determinations made on at least four separate days. If instantaneous measurements are used to determine the daily flow, the determination shall be the arithmetic average of all instantaneous measurements taken during that month. Daily average flow determination for intermittent discharges shall consist of a minimum of three flow determinations on days of discharge.

   c. Daily maximum flow - the highest total flow for any 24-hour period in a calendar month.

   d. Instantaneous flow - the measured flow during the minimum time required to interpret the flow measuring device.

   e. 2-hour peak flow (domestic wastewater treatment plants) - the maximum flow sustained for a two-hour period during the period of daily discharge. The average of multiple measurements of instantaneous maximum flow within a two-hour period may be used to calculate the 2-hour peak flow.

   f. Maximum 2-hour peak flow (domestic wastewater treatment plants) - the highest 2-hour peak flow for any 24-hour period in a calendar month.

2. Concentration Measurements

   a. Daily average concentration - the arithmetic average of all effluent samples, composite or grab as required by this permit, within a period of one calendar month, consisting of at least four separate representative measurements.

      i. For domestic wastewater treatment plants - When four samples are not available in a calendar month, the arithmetic average (weighted by flow) of all values in the previous four consecutive month period consisting of at least four measurements shall be utilized as the daily average concentration.

      ii. For all other wastewater treatment plants - When four samples are not available in a calendar month, the arithmetic average (weighted by flow) of all values taken during the month shall be utilized as the daily average concentration.

   b. 7-day average concentration - the arithmetic average of all effluent samples, composite or grab as required by this permit, within a period of one calendar week, Sunday through Saturday.

   c. Daily maximum concentration - the maximum concentration measured on a single day, by the sample type specified in the permit, within a period of one calendar month.

   d. Daily discharge - the discharge of a pollutant measured during a calendar day or any 24-hour period that reasonably represents the calendar day for purposes of sampling. For pollutants with limitations expressed in terms of mass, the "daily discharge" is calculated as the total mass of the pollutant discharged over the sampling day. For pollutants with limitations expressed in other units of measurement, the "daily discharge" is calculated as the average measurement of the pollutant over the sampling day.

      The "daily discharge" determination of concentration made using a composite sample shall be the concentration of the composite sample. When grab samples are used, the "daily discharge" determination of concentration shall be the arithmetic average (weighted by flow value) of all samples collected during that day.

e. Bacteria concentration (Fecal coliform, E. coli, or Enterococci) - the number of colonies of bacteria per 100 milliliters effluent. The daily average bacteria concentration is a geometric mean of the values for the effluent samples collected in a calendar month. The geometric mean shall be determined by calculating the nth root of the product of all measurements made in a calendar month, where n equals the number of measurements made; or, computed as the antilogarithm of the arithmetic mean of the logarithms of all measurements made in a calendar month. For any measurement of bacteria equaling zero, a substituted value of one shall be made for input into either computation method. If specified, the 7-day average for bacteria is the geometric mean of the values for all effluent samples collected during a calendar week.

f. Daily average loading (lbs/day) - the arithmetic average of all daily discharge loading calculations during a period of one calendar month. These calculations must be made for each day of the month that a parameter is analyzed. The daily discharge, in terms of mass (lbs/day), is calculated as (Flow, MGD x Concentration, mg/l x 8.34).

g. Daily maximum loading (lbs/day) - the highest daily discharge, in terms of mass (lbs/day), within a period of one calendar month.

3. Sample Type
   a. Composite sample - For domestic wastewater, a composite sample is a sample made up of a minimum of three effluent portions collected in a continuous 24-hour period or during the period of daily discharge if less than 24 hours, and combined in volumes proportional to flow, and collected at the intervals required by 30 TAC §319.9 (a). For industrial wastewater, a composite sample is a sample made up of a minimum of three effluent portions collected in a continuous 24-hour period or during the period of daily discharge if less than 24 hours, and combined in volumes proportional to flow, and collected at the intervals required by 30 TAC §319.9 (b).

   b. Grab sample - an individual sample collected in less than 15 minutes.

4. Treatment Facility (facility) - wastewater facilities used in the conveyance, storage, treatment, recycling, reclamation and/or disposal of domestic sewage, industrial wastes, agricultural wastes, recreational wastes, or other wastes including sludge handling or disposal facilities under the jurisdiction of the Commission.

5. The term "sewage sludge" is defined as solid, semi-solid, or liquid residue generated during the treatment of domestic sewage in 30 TAC Chapter 312. This includes the solids that have not been classified as hazardous waste separated from wastewater by unit processes.

6. Bypass - the intentional diversion of a waste stream from any portion of a treatment facility.

MONITORING AND REPORTING REQUIREMENTS

1. Self-Reporting
   Monitoring results shall be provided at the intervals specified in the permit. Unless otherwise specified in this permit or otherwise ordered by the Commission, the permittee shall conduct effluent sampling and reporting in accordance with 30 TAC §§319.4 - 319.12. Unless otherwise specified, a monthly effluent report shall be submitted each month, to the Enforcement Division (MC 224), by the 20th day of the following month for each discharge that is described by this permit whether or not a discharge is made for that month. Monitoring results must be reported on an approved self-report form that is signed and certified as required by Monitoring and Reporting Requirements No. 10.

   As provided by state law, the permittee is subject to administrative, civil and criminal penalties, as applicable, for negligently or knowingly violating the Clean Water Act, the TWC Chapters 26, 27, and 28, and THSC Chapter 361, including but not limited to knowingly making any false statement, representation, or certification on any report, record, or other document submitted or required to be maintained under this permit, including monitoring reports or reports of compliance or noncompliance, or falsifying, tampering with or knowingly rendering inaccurate any monitoring device or method required by this permit or violating any other requirement imposed by state or federal regulations.

2. Test Procedures
   Unless otherwise specified in this permit, test procedures for the analysis of pollutants shall comply with procedures specified in 30 TAC §§319.11 - 319.12. Measurements, tests, and calculations shall be accurately accomplished in a representative manner.

3. Records of Results
   a. Monitoring samples and measurements shall be taken at times and in a manner so as to be representative of the monitored activity.

   b. Except for records of monitoring information required by this permit related to the permittee's sewage sludge use and

disposal activities, which shall be retained for a period of at least five years (or longer as required by 40 CFR Part 503), monitoring and reporting records, including strip charts and records of calibration and maintenance, copies of all records required by this permit, records of all data used to complete the application for this permit, and the certification required by 40 CFR § 264.73(b)(9) shall be retained at the facility site, or shall be readily available for review by a TCEQ representative for a period of three years from the date of the record or sample, measurement, report, application or certification. This period shall be extended at the request of the Executive Director.

c. Records of monitoring activities shall include the following:

i. date, time and place of sample or measurement;
ii. identity of individual who collected the sample or made the measurement.
iii. date and time of analysis;
iv. identity of the individual and laboratory who performed the analysis;
v. the technique or method of analysis; and
vi. the results of the analysis or measurement and quality assurance/quality control records.

The period during which records are required to be kept shall be automatically extended to the date of the final disposition of any administrative or judicial enforcement action that may be instituted against the permittee.

4. Additional Monitoring by Permittee
If the permittee monitors any pollutant at the location(s) designated herein more frequently than required by this permit using approved analytical methods as specified above, all results of such monitoring shall be included in the calculation and reporting of the values submitted on the approved self-report form. Increased frequency of sampling shall be indicated on the self-report form.

5. Calibration of Instruments
All automatic flow measuring or recording devices and all totalizing meters for measuring flows shall be accurately calibrated by a trained person at plant start-up and as often thereafter as necessary to ensure accuracy, but not less often than annually unless authorized by the Executive Director for a longer period. Such person shall verify in writing that the device is operating properly and giving accurate results. Copies of the verification shall be retained at the facility site and/or shall be readily available for review by a TCEQ representative for a period of three years.

6. Compliance Schedule Reports
Reports of compliance or noncompliance with, or any progress reports on, interim and final requirements contained in any compliance schedule of the permit shall be submitted no later than 14 days following each schedule date to the Regional Office No. 12 and the Enforcement Division (MC 224).

7. Noncompliance Notification

a. In accordance with 30 TAC §305.125(9) any noncompliance that may endanger human health or safety, or the environment shall be reported by the permittee to the TCEQ. Report of such information shall be provided orally or by facsimile transmission (FAX) to the Regional Office within 24 hours of becoming aware of the noncompliance. A written submission of such information shall also be provided by the permittee to the Regional Office and the Enforcement Division (MC 224) within five working days of becoming aware of the noncompliance. The written submission shall contain a description of the noncompliance and its cause; the potential danger to human health or safety, or the environment; the period of noncompliance, including exact dates and times; if the noncompliance has not been corrected, the time it is expected to continue; and steps taken or planned to reduce, eliminate, and prevent recurrence of the noncompliance, and to mitigate its adverse effects.

b. The following violations shall be reported under Monitoring and Reporting Requirement 7.a.:

i. Unauthorized discharges as defined in Permit Condition 2(g).
ii. Any unanticipated bypass that exceeds any effluent limitation in the permit.
iii. Violation of a permitted maximum daily discharge limitation for pollutants listed specifically in the Other Requirements section of an Industrial TPDES permit.

c. In addition to the above, any effluent violation that deviates from the permitted effluent limitation by more than 40% shall be reported by the permittee in writing to the Regional Office and the Enforcement Division (MC 224) within 5 working days of becoming aware of the noncompliance.

d. Any noncompliance other than that specified in this section, or any required information not submitted or submitted incorrectly, shall be reported to the Enforcement Division (MC 224) as promptly as possible. For effluent limitation violations, noncompliances shall be reported on the approved self-report form.

8. In accordance with the procedures described in 30 TAC §§35.301 - 35.303 (relating to Water Quality Emergency and Temporary Orders) if the permittee knows in advance of the need for a bypass, it shall submit prior notice by applying for such authorization.

9. Changes in Discharges of Toxic Substances

All existing manufacturing, commercial, mining, and silvicultural permittees shall notify the Regional Office, orally or by facsimile transmission within 24 hours, and both the Regional Office and the Enforcement Division (MC 224) in writing within five (5) working days, after becoming aware of or having reason to believe:

a. That any activity has occurred or will occur which would result in the discharge, on a routine or frequent basis, of any toxic pollutant listed at 40 CFR Part 122, Appendix D, Tables II and III (excluding Total Phenols) which is not limited in the permit, if that discharge will exceed the highest of the following "notification levels":

i. One hundred micrograms per liter (100 μg/L);
ii. Two hundred micrograms per liter (200 μg/L) for acrolein and acrylonitrile; five hundred micrograms per liter (500 μg/L) for 2,4-dinitrophenol and for 2-methyl-4,6-dinitrophenol; and one milligram per liter (1 mg/L) for antimony;
iii. Five (5) times the maximum concentration value reported for that pollutant in the permit application; or
iv. The level established by the TCEQ.

b. That any activity has occurred or will occur which would result in any discharge, on a nonroutine or infrequent basis, of a toxic pollutant which is not limited in the permit, if that discharge will exceed the highest of the following "notification levels":

i. Five hundred micrograms per liter (500 μg/L);
ii. One milligram per liter (1 mg/L) for antimony;
iii. Ten (10) times the maximum concentration value reported for that pollutant in the permit application; or
iv. The level established by the TCEQ.

10. Signatories to Reports

All reports and other information requested by the Executive Director shall be signed by the person and in the manner required by 30 TAC §305.128 (relating to Signatories to Reports).

11. All publicly owned treatment works (POTWs) must provide adequate notice to the Executive Director of the following:

a. Any new introduction of pollutants into the POTW from an indirect discharger that would be subject to CWA §301 or §306 if it were directly discharging those pollutants;

b. Any substantial change in the volume or character of pollutants being introduced into that POTW by a source introducing pollutants into the POTW at the time of issuance of the permit; and

c. For the purpose of this paragraph, adequate notice shall include information on:

i. The quality and quantity of effluent introduced into the POTW; and
ii. Any anticipated impact of the change on the quantity or quality of effluent to be discharged from the POTW.

PERMIT CONDITIONS

1. General

   a. When the permittee becomes aware that it failed to submit any relevant facts in a permit application, or submitted incorrect information in an application or in any report to the Executive Director, it shall promptly submit such facts or information.

   b. This permit is granted on the basis of the information supplied and representations made by the permittee during action on an application, and relying upon the accuracy and completeness of that information and those representations. After notice and opportunity for a hearing, this permit may be modified, suspended, or revoked, in whole or in part, in accordance with 30 TAC Chapter 305, Subchapter D, during its term for good cause including, but not limited to, the following:

      i. Violation of any terms or conditions of this permit;
      ii. Obtaining this permit by misrepresentation or failure to disclose fully all relevant facts; or
      iii. A change in any condition that requires either a temporary or permanent reduction or elimination of the authorized discharge.

   c. The permittee shall furnish to the Executive Director, upon request and within a reasonable time, any information to determine whether cause exists for amending, revoking, suspending, or terminating the permit. The permittee shall also furnish to the Executive Director, upon request, copies of records required to be kept by the permit.

2. Compliance

   a. Acceptance of the permit by the person to whom it is issued constitutes acknowledgment and agreement that such person will comply with all the terms and conditions embodied in the permit, and the rules and other orders of the Commission.

   b. The permittee has a duty to comply with all conditions of the permit. Failure to comply with any permit condition constitutes a violation of the permit and the Texas Water Code or the Texas Health and Safety Code, and is grounds for enforcement action, for permit amendment, revocation, or suspension, or for denial of a permit renewal application or an application for a permit for another facility.

   c. It shall not be a defense for a permittee in an enforcement action that it would have been necessary to halt or reduce the permitted activity in order to maintain compliance with the conditions of the permit.

   d. The permittee shall take all reasonable steps to minimize or prevent any discharge or sludge use or disposal or other permit violation that has a reasonable likelihood of adversely affecting human health or the environment.

   e. Authorization from the Commission is required before beginning any change in the permitted facility or activity that may result in noncompliance with any permit requirements.

   f. A permit may be amended, suspended and reissued, or revoked for cause in accordance with 30 TAC §§305.62 and 305.66 and TWC §7.302. The filing of a request by the permittee for a permit amendment, suspension and reissuance, or termination, or a notification of planned changes or anticipated noncompliance, does not stay any permit condition.

   g. There shall be no unauthorized discharge of wastewater or any other waste. For the purpose of this permit, an unauthorized discharge is considered to be any discharge of wastewater into or adjacent to water in the state at any location not permitted as an outfall or otherwise defined in the Other Requirements section of this permit.

   h. In accordance with 30 TAC §305.535(a), the permittee may allow any bypass to occur from a TPDES permitted facility that does not cause permitted effluent limitations to be exceeded or an unauthorized discharge to occur, but only if the bypass is also for essential maintenance to assure efficient operation.

   i. The permittee is subject to administrative, civil, and criminal penalties, as applicable, under TWC §§7.051 - 7.075 (relating to Administrative Penalties), 7.101 - 7.111 (relating to Civil Penalties), and 7.141 - 7.202 (relating to Criminal Offenses and Penalties) for violations including, but not limited to, negligently or knowingly violating the federal CWA §§301, 302, 306, 307, 308, 318, or 405, or any condition or limitation implementing any sections in a permit issued under the CWA §402, or any requirement imposed in a pretreatment program approved under the CWA §§402 (a)(3) or 402 (b)(8).

3. Inspections and Entry

   a. Inspection and entry shall be allowed as prescribed in the TWC Chapters 26, 27, and 28, and THSC Chapter 361.

   b. The members of the Commission and employees and agents of the Commission are entitled to enter any public or private property at any reasonable time for the purpose of inspecting and investigating conditions relating to the quality of water in the state or the compliance with any rule, regulation, permit or other order of the Commission. Members, employees, or agents of the Commission and Commission contractors are entitled to enter public or private property at any reasonable time to investigate or monitor or, if the responsible party is not responsive or there is an immediate danger to public health or the environment, to remove or remediate a condition related to the quality of water in the state. Members, employees, Commission contractors, or agents acting under this authority who enter private property shall observe the establishment's rules and regulations concerning safety, internal security, and fire protection, and if the property has management in residence, shall notify management or the person then in charge of his presence and shall exhibit proper credentials. If any member, employee, Commission contractor, or agent is refused the right to enter in or on public or private property under this authority, the Executive Director may invoke the remedies authorized in TWC § 7.002. The statement above, that Commission entry shall occur in accordance with an establishment's rules and regulations concerning safety, internal security, and fire protection, is not grounds for denial or restriction of entry to any part of the facility, but merely describes the Commission's duty to observe appropriate rules and regulations during an inspection.

4. Permit Amendment and/or Renewal

   a. The permittee shall give notice to the Executive Director as soon as possible of any planned physical alterations or additions to the permitted facility if such alterations or additions would require a permit amendment or result in a violation of permit requirements. Notice shall also be required under this paragraph when:

      i. The alteration or addition to a permitted facility may meet one of the criteria for determining whether a facility is a new source in accordance with 30 TAC §305.534 (relating to New Sources and New Dischargers);

      ii. The alteration or addition could significantly change the nature or increase the quantity of pollutants discharged. This notification applies to pollutants that are subject neither to effluent limitations in the permit, nor to notification requirements in Monitoring and Reporting Requirements No. 9; or

      iii. The alteration or addition results in a significant change in the permittee's sludge use or disposal practices, and such alteration, addition, or change may justify the application of permit conditions that are different from or absent in the existing permit, including notification of additional use or disposal sites not reported during the permit application process or not reported pursuant to an approved land application plan.

   b. Prior to any facility modifications, additions, or expansions that will increase the plant capacity beyond the permitted flow, the permittee must apply for and obtain proper authorization from the Commission before commencing construction.

   c. The permittee must apply for an amendment or renewal at least 180 days prior to expiration of the existing permit in order to continue a permitted activity after the expiration date of the permit. If an application is submitted prior to the expiration date of the permit, the existing permit shall remain in effect until the application is approved, denied, or returned. If the application is returned or denied, authorization to continue such activity shall terminate upon the effective date of the action. If an application is not submitted prior to the expiration date of the permit, the permit shall expire and authorization to continue such activity shall terminate.

   d. Prior to accepting or generating wastes that are not described in the permit application or that would result in a significant change in the quantity or quality of the existing discharge, the permittee must report the proposed changes to the Commission. The permittee must apply for a permit amendment reflecting any necessary changes in permit conditions, including effluent limitations for pollutants not identified and limited by this permit.

   e. In accordance with the TWC §26.029(b), after a public hearing, notice of which shall be given to the permittee, the Commission may require the permittee, from time to time, for good cause, in accordance with applicable laws, to conform to new or additional conditions.

   f. If any toxic effluent standard or prohibition (including any schedule of compliance specified in such effluent standard or prohibition) is promulgated under CWA §307(a) for a toxic pollutant that is present in the discharge and that standard or prohibition is more stringent than any limitation on the pollutant in this permit, this permit shall be modified or revoked and reissued to conform to the toxic effluent standard or prohibition. The permittee shall comply with effluent standards or prohibitions established under CWA §307(a) for toxic pollutants within the time provided in the regulations that

established those standards or prohibitions, even if the permit has not yet been modified to incorporate the requirement.

5. Permit Transfer

   a. Prior to any transfer of this permit, Commission approval must be obtained. The Commission shall be notified in writing of any change in control or ownership of facilities authorized by this permit. Such notification should be sent to the Applications Review and Processing Team (MC 148) of the Water Quality Division.

   b. A permit may be transferred only according to the provisions of 30 TAC §305.64 (relating to Transfer of Permits) and 30 TAC §50.133 (relating to Executive Director Action on Application or WQMP update).

6. Relationship to Hazardous Waste Activities
   This permit does not authorize any activity of hazardous waste storage, processing, or disposal, which requires a permit or other authorization pursuant to the Texas Health and Safety Code.

7. Relationship to Water Rights
   Disposal of treated effluent by any means other than discharge directly to water in the state must be specifically authorized in this permit and may require a permit pursuant to TWC Chapter 11.

8. Property Rights
   A permit does not convey any property rights of any sort, or any exclusive privilege.

9. Permit Enforceability
   The conditions of this permit are severable, and if any provision of this permit, or the application of any provision of this permit to any circumstances, is held invalid, the application of such provision to other circumstances, and the remainder of this permit, shall not be affected thereby.

10. Relationship to Permit Application
    The application pursuant to which the permit has been issued is incorporated herein; provided, however, that in the event of a conflict between the provisions of this permit and the application, the provisions of the permit shall control.

11. Notice of Bankruptcy.

    a. Each permittee shall notify the executive director, in writing, immediately following the filing of a voluntary or involuntary petition for bankruptcy under any chapter of Title 11 (Bankruptcy) of the United States Code (11 USC) by or against:
       i. the permittee;
       ii. an entity (as that term is defined in 11 USC, §101(14)) controlling the permittee or listing the permit or permittee as property of the estate; or
       iii. an affiliate (as that term is defined in 11 USC, §101(2)) of the permittee.

    b. This notification must indicate:
       i. the name of the permittee and the permit number(s);
       ii. the bankruptcy court in which the petition for bankruptcy was filed; and
       iii. the date of filing of the petition.

OPERATIONAL REQUIREMENTS

1. The permittee shall at all times ensure that the facility and all of its systems of collection, treatment, and disposal are properly operated and maintained. This includes, but is not limited to, the regular, periodic examination of wastewater solids within the treatment plant by the operator in order to maintain an appropriate quantity and quality of solids inventory as described in the various operator training manuals and according to accepted industry standards for process control. Process control, maintenance, and operations records shall be retained at the facility site, or shall be readily available for review by a TCEQ representative, for a period of three years.

2. Upon request by the Executive Director, the permittee shall take appropriate samples and provide proper analysis in order to demonstrate compliance with Commission rules. Unless otherwise specified in this permit or otherwise ordered by the Commission, the permittee shall comply with all applicable provisions of 30 TAC Chapter 312 concerning sewage sludge use and disposal and 30 TAC §§319.21 - 319.29 concerning the discharge of certain hazardous metals.

3. Domestic wastewater treatment facilities shall comply with the following provisions:

a. The permittee shall notify the Municipal Permits Team, Wastewater Permitting Section (MC 148) of the Water Quality Division, in writing, of any facility expansion at least 90 days prior to conducting such activity.

b. The permittee shall submit a closure plan for review and approval to the Municipal Permits Team, Wastewater Permitting Section (MC 148) of the Water Quality Division, for any closure activity at least 90 days prior to conducting such activity. Closure is the act of permanently taking a waste management unit or treatment facility out of service and includes the permanent removal from service of any pit, tank, pond, lagoon, surface impoundment and/or other treatment unit regulated by this permit.

4. The permittee is responsible for installing prior to plant start-up, and subsequently maintaining, adequate safeguards to prevent the discharge of untreated or inadequately treated wastes during electrical power failures by means of alternate power sources, standby generators, and/or retention of inadequately treated wastewater.

5. Unless otherwise specified, the permittee shall provide a readily accessible sampling point and, where applicable, an effluent flow measuring device or other acceptable means by which effluent flow may be determined.

6. The permittee shall remit an annual water quality fee to the Commission as required by 30 TAC Chapter 21. Failure to pay the fee may result in revocation of this permit under TWC §7.302(b)(6).

7. Documentation

For all written notifications to the Commission required of the permittee by this permit, the permittee shall keep and make available a copy of each such notification under the same conditions as self-monitoring data are required to be kept and made available. Except for information required for TPDES permit applications, effluent data, including effluent data in permits, draft permits and permit applications, and other information specified as not confidential in 30 TAC §1.5(d), any information submitted pursuant to this permit may be claimed as confidential by the submitter. Any such claim must be asserted in the manner prescribed in the application form or by stamping the words "confidential business information" on each page containing such information. If no claim is made at the time of submission, information may be made available to the public without further notice. If the Commission or Executive Director agrees with the designation of confidentiality, the TCEQ will not provide the information for public inspection unless required by the Texas Attorney General or a court pursuant to an open records request. If the Executive Director does not agree with the designation of confidentiality, the person submitting the information will be notified.

8. Facilities that generate domestic wastewater shall comply with the following provisions; domestic wastewater treatment facilities at permitted industrial sites are excluded.

a. Whenever flow measurements for any domestic sewage treatment facility reach 75% of the permitted daily average or annual average flow for three consecutive months, the permittee must initiate engineering and financial planning for expansion and/or upgrading of the domestic wastewater treatment and/or collection facilities. Whenever the flow reaches 90% of the permitted daily average or annual average flow for three consecutive months, the permittee shall obtain necessary authorization from the Commission to commence construction of the necessary additional treatment and/or collection facilities. In the case of a domestic wastewater treatment facility that reaches 75% of the permitted daily average or annual average flow for three consecutive months, and the planned population to be served or the quantity of waste produced is not expected to exceed the design limitations of the treatment facility, the permittee shall submit an engineering report supporting this claim to the Executive Director of the Commission.

If in the judgment of the Executive Director the population to be served will not cause permit noncompliance, then the requirement of this section may be waived. To be effective, any waiver must be in writing and signed by the Director of the Enforcement Division (MC 149) of the Commission, and such waiver of these requirements will be reviewed upon expiration of the existing permit; however, any such waiver shall not be interpreted as condoning or excusing any violation of any permit parameter.

b. The plans and specifications for domestic sewage collection and treatment works associated with any domestic permit must be approved by the Commission and failure to secure approval before commencing construction of such works or making a discharge is a violation of this permit and each day is an additional violation until approval has been secured.

c. Permits for domestic wastewater treatment plants are granted subject to the policy of the Commission to encourage the development of area-wide waste collection, treatment, and disposal systems. The Commission reserves the right to amend any domestic wastewater permit in accordance with applicable procedural requirements to require the system covered by this permit to be integrated into an area-wide system, should such be developed; to require the delivery of the wastes authorized to be collected in, treated by or discharged from said system, to such area-wide system; or to amend this

permit in any other particular to effectuate the Commission's policy. Such amendments may be made when the changes required are advisable for water quality control purposes and are feasible on the basis of waste treatment technology, engineering, financial, and related considerations existing at the time the changes are required, exclusive of the loss of investment in or revenues from any then existing or proposed waste collection, treatment or disposal system.

9. Domestic wastewater treatment plants shall be operated and maintained by sewage plant operators holding a valid certificate of competency at the required level as defined in 30 TAC Chapter 30.

10. For Publicly Owned Treatment Works (POTWs), the 30-day average (or monthly average) percent removal for BOD and TSS shall not be less than 85%, unless otherwise authorized by this permit.

11. Facilities that generate industrial solid waste as defined in 30 TAC §335.1 shall comply with these provisions:
    a. Any solid waste, as defined in 30 TAC §335.1 (including but not limited to such wastes as garbage, refuse, sludge from a waste treatment, water supply treatment plant or air pollution control facility, discarded materials, discarded materials to be recycled, whether the waste is solid, liquid, or semisolid), generated by the permittee during the management and treatment of wastewater, must be managed in accordance with all applicable provisions of 30 TAC Chapter 335, relating to Industrial Solid Waste Management.

    b. Industrial wastewater that is being collected, accumulated, stored, or processed before discharge through any final discharge outfall, specified by this permit, is considered to be industrial solid waste until the wastewater passes through the actual point source discharge and must be managed in accordance with all applicable provisions of 30 TAC Chapter 335.

    c. The permittee shall provide written notification, pursuant to the requirements of 30 TAC §335.8(b)(1), to the Environmental Cleanup Section (MC 127) of the Remediation Division informing the Commission of any closure activity involving an Industrial Solid Waste Management Unit, at least 90 days prior to conducting such an activity.

    d. Construction of any industrial solid waste management unit requires the prior written notification of the proposed activity to the Registration and Reporting Section (MC 129) of the Registration, Review, and Reporting Division. No person shall dispose of industrial solid waste, including sludge or other solids from wastewater treatment processes, prior to fulfilling the deed recordation requirements of 30 TAC §335.5.

    e. The term "industrial solid waste management unit" means a landfill, surface impoundment, waste-pile, industrial furnace, incinerator, cement kiln, injection well, container, drum, salt dome waste containment cavern, or any other structure vessel, appurtenance, or other improvement on land used to manage industrial solid waste.

    f. The permittee shall keep management records for all sludge (or other waste) removed from any wastewater treatment process. These records shall fulfill all applicable requirements of 30 TAC Chapter 335 and must include the following, as it pertains to wastewater treatment and discharge:

        i. Volume of waste and date(s) generated from treatment process;
        ii. Volume of waste disposed of on-site or shipped off-site;
        iii. Date(s) of disposal;
        iv. Identity of hauler or transporter;
        v. Location of disposal site; and
        vi. Method of final disposal.

    The above records shall be maintained on a monthly basis. The records shall be retained at the facility site, or shall be readily available for review by authorized representatives of the TCEQ for at least five years.

12. For industrial facilities to which the requirements of 30 TAC Chapter 335 do not apply, sludge and solid wastes, including tank cleaning and contaminated solids for disposal, shall be disposed of in accordance with THSC Chapter 361.

SLUDGE PROVISIONS

The permittee is authorized to dispose of sludge only at a Texas Commission on Environmental Quality (TCEQ) authorized land application site or co-disposal landfill. **The disposal of sludge by land application on property owned, leased, or under the direct control of the permittee is a violation of the permit unless the site is authorized with the TCEQ. This provision does not authorize Distribution and Marketing of sludge. This provision does not authorize land application of Class A Sludge. This provision does not authorize the permittee to land apply sludge on property owned, leased or under the direct control of the permittee.**

SECTION I. REQUIREMENTS APPLYING TO ALL SEWAGE SLUDGE LAND APPLICATION

A. General Requirements

1. The permittee shall handle and dispose of sewage sludge in accordance with 30 TAC Chapter 312 and all other applicable state and federal regulations in a manner that protects public health and the environment from any reasonably anticipated adverse effects due to any toxic pollutants that may be present in the sludge.

2. In all cases, if the person (permit holder) who prepares the sewage sludge supplies the sewage sludge to another person for land application use or to the owner or leaseholder of the land, the permit holder shall provide necessary information to the parties who receive the sludge to assure compliance with these regulations.

3. The permittee shall give 180 days prior notice to the Executive Director in care of the Wastewater Permitting Section (MC 148) of the Water Quality Division of any change planned in the sewage sludge disposal practice.

B. Testing Requirements

1. Sewage sludge shall be tested once during the term of the permit in the Interim I and II Phases and annually in the Final Phase in accordance with the method specified in both 40 CFR Part 261, Appendix II and 40 CFR Part 268, Appendix I [Toxicity Characteristic Leaching Procedure (TCLP)] or other method, that receives the prior approval of the TCEQ for the contaminants listed in Table 1 of 40 CFR §261.24. Sewage sludge failing this test shall be managed according to RCRA standards for generators of hazardous waste, and the waste's disposition must be in accordance with all applicable requirements for hazardous waste processing, storage, or disposal. Following failure of any TCLP test, the management or disposal of sewage sludge at a facility other than an authorized hazardous waste processing, storage, or disposal facility shall be prohibited until such time as the permittee can demonstrate the sewage sludge no longer exhibits the hazardous waste toxicity characteristics (as demonstrated by the results of the TCLP tests). A written report shall be provided to both the TCEQ Registration and Reporting Section (MC 129) of the Registration, Review, and Reporting Division and the Regional Director (MC Region 12) within 7 days after failing the TCLP Test.

   The report shall contain test results, certification that unauthorized waste management has stopped and a summary of alternative disposal plans that comply with RCRA standards for the management of hazardous waste. The report shall be addressed to: Director, Registration, Review, and Reporting Division (MC 129), Texas Commission on Environmental Quality, P. O. Box 13087, Austin, Texas 78711-3087. In addition, the permittee shall prepare an annual report on the results of all sludge toxicity testing. This annual report shall be submitted to the TCEQ Regional Office (MC Region 12) and the Water Quality Compliance Monitoring Team (MC 224) of the Enforcement Division by September 1 of each year.

2. Sewage sludge shall not be applied to the land if the concentration of the pollutants exceeds the pollutant concentration criteria in Table 1. The frequency of testing for pollutants in Table 1 is found in Section I.C.

TABLE 1

Pollutant	Ceiling Concentration (Milligrams per kilogram)*
Arsenic	75
Cadmium	85
Chromium	3000
Copper	4300
Lead	840
Mercury	57
Molybdenum	75
Nickel	420
PCBs	49
Selenium	100
Zinc	7500

* Dry weight basis

3. Pathogen Control

All sewage sludge that is applied to agricultural land, forest, a public contact site, or a reclamation site shall be treated by one of the following methods to ensure that the sludge meets either the Class A or Class B pathogen requirements.

a. Six alternatives are available to demonstrate compliance with Class A sewage sludge. The first 4 options require either the density of fecal coliform in the sewage sludge be less than 1000 Most Probable Number (MPN) per gram of total solids (dry weight basis), or the density of Salmonella sp. bacteria in the sewage sludge be less than three MPN per four grams of total solids (dry weight basis) at the time the sewage sludge is used or disposed. Below are the additional requirements necessary to meet the definition of a Class A sludge.

Alternative 1 - The temperature of the sewage sludge that is used or disposed shall be maintained at or above a specific value for a period of time. See 30 TAC §312.82(a)(2)(A) for specific information.

Alternative 2 - The pH of the sewage sludge that is used or disposed shall be raised to above 12 std. units and shall remain above 12 std. units for 72 hours.

The temperature of the sewage sludge shall be above 52° Celsius for 12 hours or longer during the period that the pH of the sewage sludge is above 12 std. units.

At the end of the 72-hour period during which the pH of the sewage sludge is above 12 std. units, the sewage sludge shall be air dried to achieve a percent solids in the sewage sludge greater than 50%.

Alternative 3 - The sewage sludge shall be analyzed for enteric viruses prior to pathogen treatment. The limit for enteric viruses is less than one plaque-forming unit per four grams of total solids (dry weight basis) either before or following pathogen treatment. See 30 TAC §312.82(a)(2)(C)(i-iii) for specific information. The sewage sludge shall be analyzed for viable helminth ova prior to pathogen treatment. The limit for viable helminth ova is less than one per four grams of total solids (dry weight basis) either before or following pathogen treatment. See 30 TAC §312.82(a)(2)(C)(iv-vi) for specific information.

Alternative 4 - The density of enteric viruses in the sewage sludge shall be less than one plaque-forming unit per four grams of total solids (dry weight basis) at the time the sewage sludge is used or disposed. The density of viable helminth ova in the sewage sludge shall be less than one per four grams of total solids (dry weight basis) at the time the sewage sludge is used or disposed.

Alternative 5 (PFRP) - Sewage sludge that is used or disposed of shall be treated in one of the processes to Further Reduce Pathogens (PFRP) described in 40 CFR Part 503, Appendix B. PFRP include composting, heat drying, heat treatment, and thermophilic aerobic digestion.

Alternative 6 (PFRP Equivalent) - Sewage sludge that is used or disposed of shall be treated in a process that has been approved by the U. S. Environmental Protection Agency (EPA) as being equivalent to those in Alternative 5.

b. Three alternatives are available to demonstrate compliance with Class B criteria for sewage sludge.

Alternative 1 -

i. A minimum of seven random samples of the sewage sludge shall be collected within 48 hours of the time the sewage sludge is used or disposed of during each monitoring episode for the sewage sludge.

ii. The geometric mean of the density of fecal coliform in the samples collected shall be less than either 2,000,000 MPN per gram of total solids (dry weight basis) or 2,000,000 Colony Forming Units per gram of total solids (dry weight basis).

Alternative 2 - Sewage sludge that is used or disposed of shall be treated in one of the Processes to Significantly Reduce Pathogens (PSRP) described in 40 CFR Part 503, Appendix B, so long as all of the following requirements are met by the generator of the sewage sludge.

i. Prior to use or disposal, all the sewage sludge must have been generated from a single location, except as provided in paragraph v. below;

ii. An independent Texas Licensed Professional Engineer must make a certification to the generator of a sewage sludge that the wastewater treatment facility generating the sewage sludge is designed to achieve one of the PSRP at the permitted design loading of the facility. The certification need only be repeated if the design loading of the facility is increased. The certification shall include a statement indicating the design meets all the applicable standards specified in Appendix B of 40 CFR Part 503;

iii. Prior to any off-site transportation or on-site use or disposal of any sewage sludge generated at a wastewater treatment facility, the chief certified operator of the wastewater treatment facility or other responsible official who manages the processes to significantly reduce pathogens at the wastewater treatment facility for the permittee, shall certify that the sewage sludge underwent at least the minimum operational requirements necessary in order to meet one of the PSRP. The acceptable processes and the minimum operational and record keeping requirements shall be in accordance with established EPA final guidance;

iv. All certification records and operational records describing how the requirements of this paragraph were met shall be kept by the generator for a minimum of three years and be available for inspection by commission staff for review; and

v. If the sewage sludge is generated from a mixture of sources, resulting from a person who prepares sewage sludge from more than one wastewater treatment facility, the resulting derived product shall meet one of the PSRP, and shall meet the certification, operation, and record keeping requirements of this paragraph.

Alternative 3 - Sewage sludge shall be treated in an equivalent process that has been approved by the EPA so long as all of the following requirements are met by the generator of the sewage sludge.

i. Prior to use or disposal, all the sewage sludge must have been generated from a single location, except as provided in paragraph v. below;

ii. Prior to any off-site transportation or on-site use or disposal of any sewage sludge generated at a wastewater treatment facility, the chief certified operator of the wastewater treatment facility or other responsible official who manages the processes to significantly reduce pathogens at the wastewater treatment facility for the permittee, shall certify that the sewage sludge underwent at least the minimum operational requirements necessary in order to meet one of the PSRP. The acceptable processes and the minimum operational and record keeping requirements shall be in accordance with established EPA final guidance;

iii. All certification records and operational records describing how the requirements of this paragraph were met shall be kept by the generator for a minimum of three years and be available for inspection by commission staff for review;

iv. The executive director will accept from the EPA a finding of equivalency to the defined PSRP; and

v. If the sewage sludge is generated from a mixture of sources resulting from a person who prepares sewage sludge from more than one wastewater treatment facility, the resulting derived product shall meet one of the processes to significantly reduce pathogens, and shall meet the certification, operation, and record keeping requirements of this paragraph.

In addition, the following site restrictions must be met if Class B sludge is land applied:

vi. Food crops with harvested parts that touch the sewage sludge/soil mixture and are totally above the land surface shall not be harvested for 14 months after application of sewage sludge.

vii. Food crops with harvested parts below the surface of the land shall not be harvested for 20 months after application of sewage sludge when the sewage sludge remains on the land surface for 4 months or longer prior to incorporation into the soil.

viii. Food crops with harvested parts below the surface of the land shall not be harvested for 38 months after application of sewage sludge when the sewage sludge remains on the land surface for less than 4 months prior to incorporation into the soil.

ix. Food crops, feed crops, and fiber crops shall not be harvested for 30 days after application of sewage sludge.

x. Animals shall not be allowed to graze on the land for 30 days after application of sewage sludge.

xi. Turf grown on land where sewage sludge is applied shall not be harvested for one year after application of the sewage sludge when the harvested turf is placed on either land with a high potential for public exposure or a lawn.

xii. Public access to land with a high potential for public exposure shall be restricted for one year after application of sewage sludge.

xiii. Public access to land with a low potential for public exposure shall be restricted for 30 days after application of sewage sludge.

xiv. Land application of sludge shall be in accordance with the buffer zone requirements found in 30 TAC §312.44.

4. Vector Attraction Reduction Requirements

All bulk sewage sludge that is applied to agricultural land, forest, a public contact site, or a reclamation site shall be treated by one of the following alternatives 1 through 10 for Vector Attraction Reduction.

Alternative 1 - The mass of volatile solids in the sewage sludge shall be reduced by a minimum of 38%.

Alternative 2 - If Alternative 1 cannot be met for an anaerobically digested sludge, demonstration can be made by digesting a portion of the previously digested sludge anaerobically in the laboratory in a bench-scale unit for 40 additional days at a temperature between 30° and 37° Celsius (C). Volatile solids must be reduced by less than 17% to demonstrate compliance.

Alternative 3 - If Alternative 1 cannot be met for an aerobically digested sludge, demonstration can be made by digesting a portion of the previously digested sludge with a percent solids of two percent or less aerobically in the laboratory in a bench-scale unit for 30 additional days at 20° C. Volatile solids must be reduced by less than 15% to demonstrate compliance.

Alternative 4 - The specific oxygen uptake rate (SOUR) for sewage sludge treated in an aerobic process shall be equal to or less than 1.5 milligrams of oxygen per hour per gram of total solids (dry weight basis) at a temperature of 20° C.

Alternative 5 - Sewage sludge shall be treated in an aerobic process for 14 days or longer. During that time, the temperature of the sewage sludge shall be higher than 40° C and the average temperature of the sewage sludge shall be higher than 45° C.

Alternative 6 - The pH of sewage sludge shall be raised to 12 or higher by alkali addition and, without the addition of more alkali shall remain at 12 or higher for two hours and then remain at a pH of 11.5 or higher for an additional 22 hours at the time the sewage sludge is prepared for sale or given away in a bag or other container.

Alternative 7 - The percent solids of sewage sludge that does not contain unstabilized solids generated in a primary wastewater treatment process shall be equal to or greater than 75% based on the moisture content and total solids prior to mixing with other materials. Unstabilized solids are defined as organic materials in

sewage sludge that have not been treated in either an aerobic or anaerobic treatment process.

Alternative 8 - The percent solids of sewage sludge that contains unstabilized solids generated in a primary wastewater treatment process shall be equal to or greater than 90% based on the moisture content and total solids prior to mixing with other materials at the time the sludge is used. Unstabilized solids are defined as organic materials in sewage sludge that have not been treated in either an aerobic or anaerobic treatment process.

Alternative 9 -

i. Sewage sludge shall be injected below the surface of the land.

ii. No significant amount of the sewage sludge shall be present on the land surface within one hour after the sewage sludge is injected.

iii. When sewage sludge that is injected below the surface of the land is Class A with respect to pathogens, the sewage sludge shall be injected below the land surface within eight hours after being discharged from the pathogen treatment process.

Alternative 10-

i. Sewage sludge applied to the land surface or placed on a surface disposal site shall be incorporated into the soil within six hours after application to or placement on the land.

ii. When sewage sludge that is incorporated into the soil is Class A with respect to pathogens, the sewage sludge shall be applied to or placed on the land within eight hours after being discharged from the pathogen treatment process.

C. Monitoring Requirements

1. Toxicity Characteristic Leaching Procedure (TCLP) Test — once during the term of the permit in the Interim I and II Phases and annually in the Final Phase

2. PCBs — once during the term of the permit in the Interim I and II Phases and annually in the Final Phase

3. All metal constituents and Fecal coliform or *Salmonella sp.* bacteria shall be monitored at the appropriate frequency shown below, pursuant to 30 TAC §312.46(a)(1):

Amount of sewage sludge (*) metric tons per 365-day period	Monitoring Frequency
0 to less than 290	Once/Year
290 to less than 1,500	Once/Quarter
1,500 to less than 15,000	Once/Two Months
15,000 or greater	Once/Month

(*) *The amount of bulk sewage sludge applied to the land (dry weight basis).*

4. Representative samples of sewage sludge shall be collected and analyzed in accordance with the methods referenced in 30 TAC §312.7.

SECTION II. REQUIREMENTS SPECIFIC TO BULK SEWAGE SLUDGE FOR APPLICATION TO THE LAND MEETING CLASS A or B PATHOGEN REDUCTION AND THE CUMULATIVE LOADING RATES IN TABLE 2, OR CLASS B PATHOGEN REDUCTION AND THE POLLUTANT CONCENTRATIONS IN TABLE 3

For those permittees meeting Class A or B pathogen reduction requirements and that meet the cumulative loading rates in Table 2 below, or the Class B pathogen reduction requirements and contain concentrations of pollutants below listed in Table 3, the following conditions apply:

A. Pollutant Limits

Table 2

Pollutant	Cumulative Pollutant Loading Rate (pounds per acre)*
Arsenic	36
Cadmium	35
Chromium	2677
Copper	1339
Lead	268
Mercury	15
Molybdenum	Report Only
Nickel	375
Selenium	89
Zinc	2500

Table 3

Pollutant	Cumulative Pollutant Loading Rate (pounds per acre)*
Arsenic	41
Cadmium	39
Chromium	1200
Copper	1500
Lead	300
Mercury	17
Molybdenum	Report Only
Nickel	420
Selenium	36
Zinc	2800

* Dry weight basis

B. Pathogen Control

All bulk sewage sludge that is applied to agricultural land, forest, a public contact site, a reclamation site, shall be treated by either Class A or Class B pathogen reduction requirements as defined above in Section I.B.3.

C. Management Practices

1. Bulk sewage sludge shall not be applied to agricultural land, forest, a public contact site, or a reclamation site that is flooded, frozen, or snow-covered so that the bulk sewage sludge enters a wetland or other waters in the State.

2. Bulk sewage sludge not meeting Class A requirements shall be land applied in a manner that complies with the Management Requirements in accordance with 30 TAC §312.44.

3. Bulk sewage sludge shall be applied at or below the agronomic rate of the cover crop.

4. An information sheet shall be provided to the person who receives bulk sewage sludge sold or given away. The information sheet shall contain the following information:
   a. The name and address of the person who prepared the sewage sludge that is sold or given away in a bag or other container for application to the land.

   b. A statement that application of the sewage sludge to the land is prohibited except in accordance with the instruction on the label or information sheet.

   c. The annual whole sludge application rate for the sewage sludge application rate for the sewage sludge that does not cause any of the cumulative pollutant loading rates in Table 2 above to be exceeded, unless the pollutant concentrations in Table 3 found in Section II above are met.

D. Notification Requirements

1. If bulk sewage sludge is applied to land in a State other than Texas, written notice shall be provided prior to the initial land application to the permitting authority for the State in which the bulk sewage sludge is proposed to be applied. The notice shall include:

   a. The location, by street address, and specific latitude and longitude, of each land application site.

   b. The approximate time period bulk sewage sludge will be applied to the site.

   c. The name, address, telephone number, and National Pollutant Discharge Elimination System permit number (if appropriate) for the person who will apply the bulk sewage sludge.

2. The permittee shall give 180 days prior notice to the Executive Director in care of the Wastewater Permitting Section (MC 148) of the Water Quality Division of any change planned in the sewage sludge disposal practice.

E. Record keeping Requirements

The sludge documents will be retained at the facility site and/or shall be readily available for review by a TCEQ representative. The person who prepares bulk sewage sludge or a sewage sludge material shall develop the following information and shall retain the information at the facility site and/or shall be readily available for review by a TCEQ representative for a period of <u>five years</u>. If the permittee supplies the sludge to another person who land applies the sludge, the permittee shall notify the land applier of the requirements for record keeping found in 30 TAC §312.47 for persons who land apply.

1. The concentration (mg/kg) in the sludge of each pollutant listed in Table 3 above and the applicable pollutant concentration criteria (mg/kg), <u>or</u> the applicable cumulative pollutant loading rate and the applicable cumulative pollutant loading rate limit (lbs/ac) listed in Table 2 above.

2. A description of how the pathogen reduction requirements are met (including site restrictions for Class B sludges, if applicable).

3. A description of how the vector attraction reduction requirements are met.

4. A description of how the management practices listed above in Section II.C are being met.

5. The following certification statement:
   "I certify, under penalty of law, that the applicable pathogen requirements in 30 TAC §312.82(a) or (b) and the vector attraction reduction requirements in 30 TAC §312.83(b) have been met for each site on which bulk sewage sludge is applied. This determination has been made under my direction and supervision in accordance with the system designed to ensure that qualified personnel properly gather and evaluate the information used to determine that the management practices have been met. I am aware that there are significant penalties for false certification including fine and imprisonment."

6. The recommended agronomic loading rate from the references listed in Section II.C.3. above, as well as the actual agronomic loading rate shall be retained.

   The person who applies bulk sewage sludge or a sewage sludge material shall develop the following information and shall retain the information at the facility site and/or shall be readily available for review by a TCEQ representative

indefinitely. If the permittee supplies the sludge to another person who land applies the sludge, the permittee shall notify the land applier of the requirements for record keeping found in 30 TAC §312.47 for persons who land apply.

1. A certification statement that all applicable requirements (specifically listed) have been met, and that the permittee understands that there are significant penalties for false certification including fine and imprisonment. See 30 TAC §312.47(a)(4)(A)(ii) or 30 TAC §312.47(a)(5)(A)(ii), as applicable, and to the permittee's specific sludge treatment activities.

2. The location, by street address, and specific latitude and longitude, of each site on which sludge is applied.

3. The number of acres in each site on which bulk sludge is applied.

4. The date and time sludge is applied to each site.

5. The cumulative amount of each pollutant in pounds/acre listed in Table 2 applied to each site.

6. The total amount of sludge applied to each site in dry tons.

The above records shall be maintained on-site on a monthly basis and shall be made available to the Texas Commission on Environmental Quality upon request.

F. Reporting Requirements

The permittee shall report annually to the TCEQ Regional Office (MC Region 12 and Water Quality Compliance Monitoring Team (MC 224) of the Enforcement Division, by September 1 of each year the following information:

1. Results of tests performed for pollutants found in either Table 2 or 3 as appropriate for the permittee's land application practices.

2. The frequency of monitoring listed in Section I.C. that applies to the permittee.

3. Toxicity Characteristic Leaching Procedure (TCLP) results.

4. Identity of hauler(s) and TCEQ transporter number.

5. PCB concentration in sludge in mg/kg.

6. Date(s) of disposal.

7. Owner of disposal site(s).

8. Texas Commission on Environmental Quality registration number, if applicable.

9. Amount of sludge disposal dry weight (lbs/acre) at each disposal site.

10. The concentration (mg/kg) in the sludge of each pollutant listed in Table 1 (defined as a monthly average) as well as the applicable pollutant concentration criteria (mg/kg) listed in Table 3 above, or the applicable pollutant loading rate limit (lbs/acre) listed in Table 2 above if it exceeds 90% of the limit.

11. Level of pathogen reduction achieved (Class A or Class B).

12. Alternative used as listed in Section I.B.3.(a. or b.). Alternatives describe how the pathogen reduction requirements are met. If Class B sludge, include information on how site restrictions were met.

13. Vector attraction reduction alternative used as listed in Section I.B.4.

14. Annual sludge production in dry tons/year.

15. Amount of sludge land applied in dry tons/year.

16. The certification statement listed in either 30 TAC §312.47(a)(4)(A)(ii) or 30 TAC §312.47(a)(5)(A)(ii) as applicable to the permittee's sludge treatment activities, shall be attached to the annual reporting form.

17. When the amount of any pollutant applied to the land exceeds 90% of the cumulative pollutant loading rate for that pollutant, as described in Table 2, the permittee shall report the following information as an attachment to the annual reporting form.

    a. The location, by street address, and specific latitude and longitude.

    b. The number of acres in each site on which bulk sewage sludge is applied.

    c. The date and time bulk sewage sludge is applied to each site.

    d. The cumulative amount of each pollutant (i.e., pounds/acre) listed in Table 2 in the bulk sewage sludge applied to each site.

    e. The amount of sewage sludge (i.e., dry tons) applied to each site.

    The above records shall be maintained on a monthly basis and shall be made available to the Texas Commission on Environmental Quality upon request.

SECTION III. REQUIREMENTS APPLYING TO ALL SEWAGE SLUDGE DISPOSED IN A MUNICIPAL SOLID WASTE LANDFILL

A. The permittee shall handle and dispose of sewage sludge in accordance with 30 TAC Chapter 330 and all other applicable state and federal regulations to protect public health and the environment from any reasonably anticipated adverse effects due to any toxic pollutants that may be present. The permittee shall ensure that the sewage sludge meets the requirements in 30 TAC Chapter 330 concerning the quality of the sludge disposed in a municipal solid waste landfill.

B. If the permittee generates sewage sludge and supplies that sewage sludge to the owner or operator of a Municipal Solid Waste Landfill (MSWLF) for disposal, the permittee shall provide to the owner or operator of the MSWLF appropriate information needed to be in compliance with the provisions of this permit.

C. The permittee shall give 180 days prior notice to the Executive Director in care of the Wastewater Permitting Section (MC 148) of the Water Quality Division of any change planned in the sewage sludge disposal practice.

D. Sewage sludge shall be tested once during the term of the permit in the Interim I and II Phases and annually in the Final Phase in accordance with the method specified in both 40 CFR Part 261, Appendix II and 40 CFR Part 268, Appendix I (Toxicity Characteristic Leaching Procedure) or other method that receives the prior approval of the TCEQ for contaminants listed in Table 1 of 40 CFR §261.24. Sewage sludge failing this test shall be managed according to RCRA standards for generators of hazardous waste, and the waste's disposition must be in accordance with all applicable requirements for hazardous waste processing, storage, or disposal.

Following failure of any TCLP test, the management or disposal of sewage sludge at a facility other than an authorized hazardous waste processing, storage, or disposal facility shall be prohibited until such time as the permittee can demonstrate the sewage sludge no longer exhibits the hazardous waste toxicity characteristics (as demonstrated by the results of the TCLP tests). A written report shall be provided to both the TCEQ Registration and Reporting Section (MC 129) of the Registration, Review, and Reporting Division and the Regional Director (MC Region 12) of the appropriate TCEQ field office within 7 days after failing the TCLP Test.

The report shall contain test results, certification that unauthorized waste management has stopped and a summary of alternative disposal plans that comply with RCRA standards for the management of hazardous waste. The report shall be addressed to: Director, Registration, Review, and Reporting Division (MC 129), Texas Commission on Environmental Quality, P. O. Box 13087, Austin, Texas 78711-3087. In addition, the permittee shall prepare an annual report on the results of all sludge toxicity testing. This annual report shall be submitted to the TCEQ Regional Office (MC Region 12) and the Water Quality Compliance Monitoring Team (MC 224) of the Enforcement Division by September 1 of each year.

E. Sewage sludge shall be tested as needed, in accordance with the requirements of 30 TAC Chapter 330.

F. Record keeping Requirements

The permittee shall develop the following information and shall retain the information for five years.

1. The description (including procedures followed and the results) of all liquid Paint Filter Tests performed.

2. The description (including procedures followed and results) of all TCLP tests performed.

3. The above records shall be maintained on-site on a monthly basis and shall be made available to the Texas Commission on Environmental Quality upon request.

G. Reporting Requirements

The permittee shall report annually to the TCEQ Regional Office (MC Region 12) and Water Quality Compliance Monitoring Team (MC 224) of the Enforcement Division by September 1 of each year the following information:

1. Toxicity Characteristic Leaching Procedure (TCLP) results.

2. Annual sludge production in dry tons/year.

3. Amount of sludge disposed in a municipal solid waste landfill in dry tons/year.

4. Amount of sludge transported interstate in dry tons/year.

5. A certification that the sewage sludge meets the requirements of 30 TAC Chapter 330 concerning the quality of the sludge disposed in a municipal solid waste landfill.

6. Identity of hauler(s) and transporter registration number.

7. Owner of disposal site(s).

8. Location of disposal site(s).

9. Date(s) of disposal.

10. The above records shall be maintained on-site on a monthly basis and shall be made available to the Texas Commission on Environmental Quality upon request.

OTHER REQUIREMENTS

1. The permittee shall employ or contract with one or more licensed wastewater treatment facility operators or wastewater system operations companies holding a valid license or registration according to the requirements of 30 TAC Chapter 30, Occupational Licenses and Registrations and in particular 30 TAC Chapter 30, Subchapter J, Wastewater Operators and Operations Companies.

   This Category C in the Interim I and II Phases and B in the Final Phase facility must be operated by a chief operator or an operator holding a Category C in the Interim I and II Phases and B in the Final Phase license or higher. The facility must be operated a minimum of five days per week by the licensed chief operator or an operator holding the required level of license or higher. The licensed chief operator or operator holding the required level of license or higher must be available by telephone or pager seven days per week. Where shift operation of the wastewater treatment facility is necessary, each shift that does not have the on-site supervision of the licensed chief operator must be supervised by an operator in charge who is licensed not less than one level below the category for the facility.

2. The facility is not located in the Coastal Management Program boundary.

3. This facility was previously permitted under Permit No. 12434-001.

4. Prior to construction of the Interim II and Final Phase treatment facilities, the permittee shall submit to the TCEQ Wastewater Permitting Section (MC 148) a summary transmittal letter in accordance with the requirements in 30 TAC Section 317.1. If requested by the Wastewater Permitting Section, the permittee shall submit plans, specifications and a final engineering design report which comply with 30 TAC Chapter 317, Design Criteria for Sewerage Systems. The permittee shall clearly show how the treatment system will meet the permitted effluent limitations required on Pages 2a and 2b of the permit.

5. There is no mixing zone established for this discharge to an intermittent stream. Acute toxic criteria apply at the point of discharge.

6. The permittee is hereby placed on notice that this permit may be reviewed by the TCEQ after the completion of any new intensive water quality survey on Segment No. 1004 of the San Jacinto River Basin and any subsequent updating of the water quality model for Segment No.1004, in order to determine if the limitations and conditions contained herein are consistent with any such revised model. The permit may be amended, pursuant to 30 TAC §305.62, as a result of such review. The permittee is also hereby placed on notice that effluent limits may be made more stringent at renewal based on, for example, any change to modeling protocol approved in the TCEQ Continuing Planning Process.

7. In the Interim II Phase (package plant), the permittee shall comply with the requirements of 30 TAC §309.13 (a) through (d). In addition, by ownership of the required buffer zone area, the permittee shall comply with the requirements of 30 TAC §309.13(e).

   In the Final Phase, the permittee shall comply with the requirements of 30 TAC §309.13 (a) through (d). The permittee shall not commence construction and operation of the Final Phase facilities unless the permittee complies with the requirements of 30 TAC §309.13(e) by ownership of the required buffer zone area. The permittee shall comply with the requirements of 30 TAC §309.13(e) by submitting evidence of ownership of that part of the buffer zone not owned by the permittee (Attachment A).

8. The permittee shall comply with 30 TAC §311.36, which requires the permittees of all domestic wastewater treatment facilities discharging into the Lake Houston Watershed to install dual-feed chlorination systems

capable of automatically changing from one cylinder to another if gaseous chlorination is used for disinfection.

9. The permittee shall provide facilities for the protection of its wastewater treatment facilities from a 100-year flood.

10. The permittee is also authorized to haul sludge from the wastewater treatment facility, by a licensed hauler, to any City of Houston Wastewater Treatment Facility, to be treated and then disposed of with the sludge from the plant accepting the sludge.

    The permittee shall keep records of all sludge removed from the wastewater treatment plant site and these records shall include the following information:

    a. The volume of sludge hauled;
    b. The date(s) that sludge was hauled;
    c. The identity of haulers; and
    d. The permittee, TCEQ permit number, and location of the wastewater treatment plant to which the sludge is hauled.

    These records shall be maintained on a monthly basis and shall be reported to the TCEQ Regional Office (MC Region 12) and the TCEQ Water Quality Compliance Monitoring Team (MC 224) of the Enforcement Division by September 1 of each year.

11. The permittee notify the TCEQ Regional Office (MC Region 12) and the Applications Review and Processing Team (MC 148) of the Water Quality Division, as well as the Harris County Public Health and Environmental Services Pollution Control Division, in writing at least forty-five (45) days prior to the completion of the new facilities for the Interim II and Final Phases.

12. The permittee is hereby placed on notice that the Executive Director of the TCEQ will be initiating rulemaking and/or changes to procedural documents that may result in bacteria effluent limits and monitoring requirements for this facility.

BIOMONITORING REQUIREMENTS

CHRONIC BIOMONITORING REQUIREMENTS: FRESHWATER

The provisions of this Section apply to Outfall 001 for whole effluent toxicity testing (biomonitoring).

1. Scope, Frequency and Methodology

a. The permittee shall test the effluent for toxicity in accordance with the provisions below. Such testing will determine if an appropriately dilute effluent sample adversely affects the survival, reproduction, or growth of the test organisms.

b. Within 60 days of initial discharge of the 2.0 MGD facility, or when discharged flows exceed 1.0 MGD, whichever comes first, the permittee shall conduct the following toxicity tests utilizing the test organisms, procedures and quality assurance requirements specified in this Part of the permit and in accordance with "Short-Term Methods for Estimating the Chronic Toxicity of Effluents and Receiving Waters to Freshwater Organisms, Fourth Edition" (EPA-821-R-02-013), or the most recent update:

1) Chronic static renewal survival and reproduction test using the water flea (*Ceriodaphnia dubia*) (Method 1002.0 or the most recent update). This test should be terminated when 60% of the surviving adults in the control produce three broods or at the end of eight days, whichever comes first. This test shall be conducted once per quarter.

2) Chronic static renewal 7-day larval survival and growth test using the fathead minnow (*Pimephales promelas*) (Method 1000.0 or the most recent update). A minimum of five replicates with eight organisms per replicate shall be used in the control and in each dilution. This test shall be conducted once per quarter.

The permittee must perform and report a valid test for each test species during the prescribed reporting period. An invalid test must be repeated during the same reporting period. An invalid test is herein defined as any test failing to satisfy the test acceptability criteria, procedures, and quality assurance requirements specified in the test methods and permit. All test results, valid or invalid, must be submitted as described below.

c. The permittee shall use five effluent dilution concentrations and a control in each toxicity test. These additional effluent concentrations are 5%, 6%, 8%, 11%, and 15% effluent. The critical dilution, defined as 11% effluent, is the effluent concentration representative of the proportion of effluent in the receiving water during critical low flow or critical mixing conditions.

d. This permit may be amended to require a Whole Effluent Toxicity (WET) limit, Chemical-Specific (CS) effluent limits, a Best Management Practice (BMP), additional toxicity testing, and/or other appropriate actions to address toxicity. The permittee may be required to conduct additional biomonitoring tests and/or a Toxicity Reduction Evaluation (TRE) if biomonitoring data indicate multiple numbers of unconfirmed toxicity events.

e. Testing Frequency Reduction

1) If none of the first four consecutive quarterly tests demonstrates significant lethal or sub-lethal effects, the permittee may submit this information in writing and, upon approval from the

Water Quality Standards Team, reduce the testing frequency to once per six months for the invertebrate test species and once per year for the vertebrate test species.

2) If one or more of the first four consecutive quarterly tests demonstrates significant sub-lethal effects, the permittee shall continue quarterly testing for that species until four consecutive quarterly tests demonstrate no significant sub-lethal effects. At that time, the permittee may apply for the appropriate testing frequency reduction for that species.

3) If one or more of the first four consecutive quarterly tests demonstrates significant lethal effects, the permittee shall continue quarterly testing for that species until the permit is reissued. If a testing frequency reduction had been previously granted and a subsequent test demonstrates significant lethal effects, the permittee will resume a quarterly testing frequency for that species until the permit is reissued.

2. Required Toxicity Testing Conditions

a. Test Acceptance - The permittee shall repeat any toxicity test, including the control and all effluent dilutions, which fail to meet the following criteria:

1) a control mean survival of 80% or greater;

2) a control mean number of water flea neonates per surviving adult of 15 or greater;

3) a control mean dry weight of surviving fathead minnow larvae of 0.25 mg or greater;

4) a control Coefficient of Variation percent (CV%) of 40 or less in between replicates for the young of surviving females in the water flea reproduction and survival test; and the growth and survival endpoints in the fathead minnow growth and survival test.

5) a critical dilution CV% of 40 or less for young of surviving females in the water flea reproduction and survival test; and the growth and survival endpoints for the fathead minnow growth and survival test. However, if statistically significant lethal or nonlethal effects are exhibited at the critical dilution, a CV% greater than 40 shall not invalidate the test.

6) a Percent Minimum Significant Difference of 47 or less for water flea reproduction;

7) a Percent Minimum Significant Difference of 30 or less for fathead minnow growth.

b. Statistical Interpretation

1) For the water flea survival test, the statistical analyses used to determine if there is a significant difference between the control and an effluent dilution shall be Fisher's Exact Test as described in the "Short-Term Methods for Estimating the Chronic Toxicity of Effluents and Receiving Waters to Freshwater Organisms, Fourth Edition" (EPA-821-R-02-013), or the most recent update thereof.

2) For the water flea reproduction test and the fathead minnow larval survival and growth tests, the statistical analyses used to determine if there is a significant difference between the control and an effluent dilution shall be in accordance with the methods described in the "Short-Term Methods for Estimating the Chronic Toxicity of Effluents and Receiving Waters

to Freshwater Organisms, Fourth Edition" (EPA-821-R-02-013), or the most recent update thereof.

3) The permittee is responsible for reviewing test concentration-response relationships to ensure that calculated test-results are interpreted and reported correctly. The EPA manual, "Method Guidance and Recommendation for Whole Effluent Toxicity (WET) Testing (40 CFR Part 136)" (EPA 821-B-00-004) provides guidance on determining the validity of test results.

4) If significant lethality is demonstrated (that is, there is a statistically significant difference in survival at the critical dilution when compared to the control), the conditions of test acceptability are met, and the survival of the test organisms are equal to or greater than 80% in the critical dilution and all dilutions below that, then the permittee shall report a survival No Observed Effect Concentration (NOEC) of not less than the critical dilution for the reporting requirements.

5) The NOEC is defined as the greatest effluent dilution at which no significant effect is demonstrated. The Lowest Observed Effect Concentration (LOEC) is defined as the lowest effluent dilution at which a significant effect is demonstrated. A significant effect is herein defined as a statistically significant difference at the 95% confidence level between the survival, reproduction, or growth of the test organism(s) in a specified effluent dilution compared to the survival, reproduction, or growth of the test organism(s) in the control (0% effluent).

6) The use of NOECs and LOECs assumes either a monotonic (continuous) concentration-response relationship or a threshold model of the concentration-response relationship. For any test result that demonstrates a non-monotonic (non-continuous) response, the NOEC should be determined based on the guidance manual referenced in Item 3 above and a full report will be submitted to the Water Quality Standards Team

7) Pursuant to the responsibility assigned to the permittee in Part 2.b.3), test results that demonstrate a non-monotonic (non-continuous) concentration-response relationship may be submitted, prior to the due date, for technical review. The above-referenced guidance manual will be used when making a determination of test acceptability.

8) The Water Quality Standards Team will review test results (i.e., Table 1 and Table 2 forms) for consistency with established TCEQ rules, procedures, and permit requirements.

c. Dilution Water

1) Dilution water used in the toxicity tests shall be the receiving water collected at a point upstream of the discharge as close as possible to the discharge point, but unaffected by the discharge. Where the toxicity tests are conducted on effluent discharges to receiving waters that are classified as intermittent streams, or where the toxicity tests are conducted on effluent discharges where no receiving water is available due to zero flow conditions, the permittee shall; (a) substitute a synthetic dilution water that has a pH, hardness, and alkalinity similar to that of the closest downstream perennial water unaffected by the discharge, or (b) utilize the closest downstream perennial water unaffected by the discharge.

2) Where the receiving water proves unsatisfactory as a result of pre-existing instream toxicity (i.e. fails to fulfill the test acceptance criteria of item 2.a.), the permittee may substitute

synthetic dilution water for the receiving water in all subsequent tests provided the unacceptable receiving water test met the following stipulations:

a) a synthetic lab water control was performed (in addition to the receiving water control) which fulfilled the test acceptance requirements of item 2.a;

b) the test indicating receiving water toxicity was carried out to completion (i.e., 7 days);

c) the permittee submitted all test results indicating receiving water toxicity with the reports and information required in Part 3 of this Section.

The synthetic dilution water shall have a pH, hardness, and alkalinity similar to that of the receiving water or a natural water in the drainage basin that is unaffected by the discharge, provided the magnitude of these parameters will not cause toxicity in a synthetic dilution water control that has been formulated to match the pH, hardness, and alkalinity naturally found in the receiving water. Upon approval, the permittee may substitute other appropriate dilution water with chemical and physical characteristics similar to that of the receiving water.

d. Samples and Composites

1) The permittee shall collect a minimum of three flow-weighted 24-hour composite samples from Outfall 001. The second and third 24-hour composite samples will be used for the renewal of the dilution concentrations for each toxicity test. A 24-hour composite sample consists of a minimum of 12 effluent portions collected at equal time intervals representative of a 24-hour operating day and combined proportionally to flow, or a sample continuously collected proportionally to flow over a 24-hour operating day.

2) The permittee shall collect the 24-hour composite samples such that the samples are representative of any periodic episode of chlorination, biocide usage, or other potentially toxic substance discharged on an intermittent basis.

3) The permittee shall initiate the toxicity tests within 36 hours after collection of the last portion of the first 24-hour composite sample. The holding time for any subsequent 24-hour composite sample shall not exceed 72 hours. Samples shall be maintained at a temperature of 0-6 degrees Centigrade during collection, shipping, and storage.

4) If Outfall 001 ceases discharging during the collection of effluent samples, the requirements for the minimum number of effluent samples, the minimum number of effluent portions, and the sample holding time, are waived during that sampling period. However, the permittee must have collected an effluent composite sample volume sufficient to complete the required toxicity tests with renewal of the effluent. When possible, the effluent samples used for the toxicity tests shall be collected on separate days if the discharge occurs over multiple days. The effluent composite sample collection duration and the static renewal protocol associated with the abbreviated sample collection must be documented in the full report.

5) The effluent samples shall not be dechlorinated after sample collection.

3. <u>Reporting</u>

All reports, tables, plans, summaries, and related correspondence required in any Part of this Section shall be submitted to the attention of the Water Quality Standards Team (MC 150) of the Water Quality Division. All DMRs, including DMRs with biomonitoring data, should be sent to the Water Quality Compliance Monitoring Team of the Enforcement Division (MC 224).

a. The permittee shall prepare a full report of the results of all tests conducted pursuant to this permit in accordance with the Report Preparation Section of "Short-Term Methods for Estimating the Chronic Toxicity of Effluents and Receiving Waters to Freshwater Organisms, Fourth Edition" (EPA-821-R-02-013), or the most recent update, for every valid and invalid toxicity test initiated whether carried to completion or not. All full reports shall be retained for 3 years at the plant site and shall be available for inspection by TCEQ personnel.

b. A full report must be submitted with the first valid biomonitoring test results for each test species and with the first test results any time the permittee subsequently employs a different test laboratory. Full reports need not be submitted for subsequent testing unless specifically requested. The permittee shall routinely report the results of each biomonitoring test on the Table 1 forms provided with this permit. All Table 1 reports must include the information specified in the Table 1 form attached to this permit.

1) Annual biomonitoring test results are due on or before January 20th for biomonitoring conducted during the previous 12 month period.

2) Semiannual biomonitoring test results are due on or before July 20th and January 20th for biomonitoring conducted during the previous 6 month period.

3) Quarterly biomonitoring test results are due on or before April 20th, July 20th, October 20th, and January 20th, for biomonitoring conducted during the previous calendar quarter.

4) Monthly biomonitoring test results are due on or before the 20th day of the month following sampling.

c. Enter the following codes on the DMR for the appropriate parameters for valid tests only:

1) For the water flea, Parameter TLP3B, enter a "1" if the NOEC for survival is less than the critical dilution; otherwise, enter a "0."

2) For the water flea, Parameter TOP3B, report the NOEC for survival.

3) For the water flea, Parameter TXP3B, report the LOEC for survival.

4) For the water flea, Parameter TWP3B, enter a "1" if the NOEC for reproduction is less than the critical dilution; otherwise, enter a "0."

5) For the water flea, Parameter TPP3B, report the NOEC for reproduction.

6) For the water flea, Parameter TYP3B, report the LOEC for reproduction.

7) For the fathead minnow, Parameter TLP6C,enter a "1" if the NOEC for survival is less than the critical dilution; otherwise, enter a "0."

8) For the fathead minnow, Parameter TOP6C, report the NOEC for survival.

9) For the fathead minnow, Parameter TXP6C, report the LOEC for survival.

10) For the fathead minnow, Parameter TWP6C,enter a "1" if the NOEC for growth is less than the critical dilution; otherwise, enter a "0."

11) For the fathead minnow, Parameter TPP6C, report the NOEC for growth.

12) For the fathead minnow, Parameter TYP6C, report the LOEC for growth

d. Enter the following codes on the DMR for retests only:

1) For retest number 1, Parameter 22415, enter a "1" if the NOEC for survival is less than the critical dilution; otherwise, enter a "0."

2) For retest number 2, Parameter 22416, enter a "1" if the NOEC for survival is less than the critical dilution; otherwise, enter a "0."

4. Persistent Toxicity

The requirements of this Part apply only when a test demonstrates a significant effect at the critical dilution. A significant effect is defined as a statistically significant difference, at the 95% confidence level, between a specified endpoint (survival, growth, or reproduction) of the test organism in a specified effluent dilution when compared to the specified endpoint of the test organism in the control. Significant lethality is defined as a statistically significant difference in survival at the critical dilution when compared to the survival of the test organism in the control. Significant sublethality is defined as a statistically significant difference in growth/reproduction at the critical dilution when compared to the growth/reproduction of the test organism in the control.

a. The permittee shall conduct a total of 2 additional tests (retests) for any species that demonstrates a significant effect (lethal or sublethal) at the critical dilution. The two retests shall be conducted monthly during the next two consecutive months. The permittee shall not substitute either of the two retests in lieu of routine toxicity testing. All reports shall be submitted within 20 days of test completion. Test completion is defined as the last day of the test. The retests shall also be reported on the DMRs as specified in Part 3.d.

b. If the retests are performed due to a demonstration of significant lethality, and one or both of the two retests specified in item 4.a. demonstrates significant lethality, the permittee shall initiate the TRE requirements as specified in Part 5. The provisions of item 4.a. are suspended upon completion of the two retests and submittal of the TRE Action Plan and Schedule defined in Part 5.

If neither test demonstrates significant lethality and the permittee is testing under the reduced testing frequency provision of Part 1.e., the permittee shall return to a quarterly testing frequency for that species.

c. If the two retests are performed due to a demonstration of significant sublethality, and one or both of the two retests specified in item 4.a. demonstrates significant lethality, the permittee shall again perform two retests as stipulated in item 4.a.

d. If the two retests are performed due to a demonstration of significant sublethality, and both retests pass, the permittee shall continue testing at the quarterly frequency until such time that the permittee can invoke the reduced testing frequency provision specified in Part 1.e.

e. Regardless of whether retesting for lethal or sublethal effects, or a combination of the two, no more than one retest per month is required for a species.

5. Toxicity Reduction Evaluation

a. Within 45 days of the last test day of the retest that demonstrates significant lethality, the permittee shall submit a General Outline for initiating a TRE. The outline shall include, but not be limited to, a description of project personnel, a schedule for obtaining consultants (if needed), a discussion of influent and/or effluent data available for review, a sampling and analytical schedule, and a proposed TRE initiation date.

b. Within 90 days of the last test day of the retest that demonstrates significant lethality, the permittee shall submit a TRE Action Plan and Schedule for conducting a TRE. The plan shall specify the approach and methodology to be used in performing the TRE. A Toxicity Reduction Evaluation is a step-wise investigation combining toxicity testing with physical and chemical analysis to determine actions necessary to eliminate or reduce effluent toxicity to a level not effecting significant lethality at the critical dilution. The TRE Action Plan shall lead to the successful elimination of significant lethal effects at the critical dilution for both test species defined in item 1.b. As a minimum, the TRE Action Plan shall include the following:

1) Specific Activities - The TRE Action Plan shall specify the approach the permittee intends to utilize in conducting the TRE, including toxicity characterizations, identifications, confirmations, source evaluations, treatability studies, and/or alternative approaches. When conducting characterization analyses, the permittee shall perform multiple characterizations and follow the procedures specified in the document entitled, "Toxicity Identification Evaluation: Characterization of Chronically Toxic Effluents, Phase I" (EPA/600/6-91/005F), or alternate procedures. The permittee shall perform multiple identifications and follow the methods specified in the documents entitled, "Methods for Aquatic Toxicity Identification Evaluations, Phase II Toxicity Identification Procedures for Samples Exhibiting Acute and Chronic Toxicity" (EPA/600/R-92/080) and "Methods for Aquatic Toxicity Identification Evaluations, Phase III Toxicity Confirmation Procedures for Samples Exhibiting Acute and Chronic Toxicity" (EPA/600/R-92/081). All characterization, identification, and confirmation tests shall be conducted in an orderly and logical progression;

2) Sampling Plan - The TRE Action Plan should describe sampling locations, methods, holding times, chain of custody, and preservation techniques. The effluent sample volume collected for all tests shall be adequate to perform the toxicity characterization/ identification/ confirmation procedures, and chemical-specific analyses when the toxicity tests show significant lethality. Where the permittee has identified or suspects specific pollutant(s) and/or source(s) of effluent toxicity, the permittee shall conduct, concurrent with toxicity testing, chemical-specific analyses for the identified and/or suspected pollutant(s) and/or source(s) of effluent toxicity;

3) Quality Assurance Plan - The TRE Action Plan should address record keeping and data evaluation, calibration and standardization, baseline tests, system blanks, controls, duplicates,

spikes, toxicity persistence in the samples, randomization, reference toxicant control charts, as well as mechanisms to detect artifactual toxicity; and

4) Project Organization - The TRE Action Plan should describe the project staff, project manager, consulting engineering services (where applicable), consulting analytical and toxicological services, etc.

c. Within 30 days of submittal of the TRE Action Plan and Schedule, the permittee shall implement the TRE with due diligence.

d. The permittee shall submit quarterly TRE Activities Reports concerning the progress of the TRE. The quarterly reports are due on or before April 20th, July 20th, October 20th, and January 20th. The report shall detail information regarding the TRE activities including:

1) results and interpretation of any chemical-specific analyses for the identified and/or suspected pollutant(s) performed during the quarter;

2) results and interpretation of any characterization, identification, and confirmation tests performed during the quarter;

3) any data and/or substantiating documentation which identifies the pollutant(s) and/or source(s) of effluent toxicity;

4) results of any studies/evaluations concerning the treatability of the facility's effluent toxicity;

5) any data which identifies effluent toxicity control mechanisms that will reduce effluent toxicity to the level necessary to meet no significant lethality at the critical dilution; and

6) any changes to the initial TRE Plan and Schedule that are believed necessary as a result of the TRE findings.

Copies of the TRE Activities Report shall also be submitted to the U.S. EPA Region 6 office.

e. During the TRE, the permittee shall perform, at a minimum, quarterly testing using the more sensitive species; testing for the less sensitive species shall continue at the frequency specified in Part 1.b.

f. If the effluent ceases to effect significant lethality (herein as defined below) the permittee may end the TRE. A "cessation of lethality" is defined as no significant lethality for a period of 12 consecutive months with at least monthly testing. At the end of the 12 months, the permittee shall submit a statement of intent to cease the TRE and may then resume the testing frequency specified in Part 1.b. The permittee may only apply the "cessation of lethality" provision once.

This provision accommodate situations where operational errors and upsets, spills, or sampling errors triggered the TRE, in contrast to a situation where a single toxicant or group of toxicants cause lethality. This provision does not apply as a result of corrective actions taken by the permittee. "Corrective actions" are herein defined as proactive efforts which eliminate or reduce effluent toxicity. These include, but are not limited to, source reduction or elimination, improved housekeeping, changes in chemical usage, and modifications of influent streams and/or effluent treatment.

The permittee may only apply this cessation of lethality provision once. If the effluent again demonstrates significant lethality to the same species, the permit will be amended to add a WET limit with a compliance period, if appropriate. However, prior to the effective date of the WET limit, the permittee may apply for a permit amendment removing and replacing the WET limit with an alternate toxicity control measure by identifying and confirming the toxicant and/or an appropriate control measure.

g. The permittee shall complete the TRE and submit a Final Report on the TRE Activities no later than 28 months from the last test day of the retest that confirmed significant lethal effects at the critical dilution. The permittee may petition the Executive Director (in writing) for an extension of the 28-month limit. However, to warrant an extension the permittee must have demonstrated due diligence in their pursuit of the TIE/TRE and must prove that circumstances beyond their control stalled the TIE/TRE. The report shall provide information pertaining to the specific control mechanism(s) selected that will, when implemented, result in reduction of effluent toxicity to no significant lethality at the critical dilution. The report will also provide a specific corrective action schedule for implementing the selected control mechanism(s). A copy of the TRE Final Report shall also be submitted to the U.S. EPA Region 6 office.

h. Based upon the results of the TRE and proposed corrective actions, this permit may be amended to modify the biomonitoring requirements, where necessary, to require a compliance schedule for implementation of corrective actions, to specify a WET limit, to specify a BMP, and/or to specify CS limits.

TABLE 1 (SHEET 1 OF 4)

BIOMONITORING REPORTING

CERIODAPHNIA DUBIA SURVIVAL AND REPRODUCTION

		Date Time		Date Time
Dates and Times Composites Collected	No. 1	FROM: _____	TO:	_____
	No. 2	FROM: _____	TO:	_____
	No. 3	FROM: _____	TO:	_____

Test initiated: _____ am/pm _____ date

Dilution water used: _____ Receiving water _____ Synthetic Dilution water

NUMBER OF YOUNG PRODUCED PER ADULT AT END OF TEST

	Percent effluent (%)					
REP	0%	5%	6%	8%	11%	15%
A						
B						
C						
D						
E						
F						
G						
H						
I						
J						
Surviv. Mean						
Total Mean						
CV%*						
PMSD						

*coefficient of variation = standard deviation x 100/mean (calculation based on young of the surviving adults)
Designate males (M), and dead females (D), along with number of neonates (x) released prior to death.

TABLE 1 (SHEET 2 OF 4)

CERIODAPHNIA DUBIA SURVIVAL AND REPRODUCTION TEST

1. Dunnett's Procedure or Steel's Many-One Rank Test or Wilcoxon Rank Sum Test (with Bonferroni adjustment) or t-test (with Bonferroni adjustment) as appropriate:

   Is the mean number of young produced per adult significantly less (p=0.05) than the number of young per adult in the control for the % effluent corresponding to significant nonlethal effects?

   CRITICAL DILUTION (11%): _____ YES _____ NO

PERCENT SURVIVAL

	Percent effluent (%)					
Time of Reading	0%	5%	6%	8%	11%	15%
24h						
48h						
End of Test						

2. Fisher's Exact Test:

   Is the mean survival at test end significantly less (p=0.05) than the control survival for the % effluent corresponding to lethality?

   CRITICAL DILUTION (11%): _____ YES _____ NO

3. Enter percent effluent corresponding to each NOEC\LOEC below:

   a.) NOEC survival = _____% effluent

   b.) LOEC survival = _____% effluent

   c.) NOEC reproduction = _____% effluent

   d.) LOEC reproduction = _____% effluent

TABLE 1 (SHEET 3 OF 4)

BIOMONITORING REPORTING

FATHEAD MINNOW LARVAE GROWTH AND SURVIVAL

		Date Time		Date Time
Dates and Times Composites Collected	No. 1	FROM:_____	TO:	_____
	No. 2	FROM:_____	TO:	_____
	No. 3	FROM:_____	TO:	_____

Test initiated:_____am/pm _____date

Dilution water used: _____ Receiving water _____ Synthetic Dilution water

FATHEAD MINNOW GROWTH DATA

Effluent Concentration (%)	Average Dry Weight in milligrams in replicate chambers					Mean Dry Weight	CV%*
	A	B	C	D	E		
0%							
5%							
6%							
8%							
11%							
15%							
PMSD							

* coefficient of variation = standard deviation x 100/mean

1. Dunnett's Procedure or Steel's Many-One Rank Test or Wilcoxon Rank Sum Test (with Bonferroni adjustment) or t-test (with Bonferroni adjustment) as appropriate:

   Is the mean dry weight (growth) at 7 days significantly less (p=0.05) than the control's dry weight (growth) for the % effluent corresponding to significant nonlethal effects?

   CRITICAL DILUTION (11%): _____ YES _____ NO

TABLE 1 (SHEET 4 OF 4)

BIOMONITORING REPORTING
FATHEAD MINNOW GROWTH AND SURVIVAL TEST

FATHEAD MINNOW SURVIVAL DATA

Effluent Concentration (%)	Percent Survival in replicate chambers					Mean percent survival			CV%*
	A	B	C	D	E	24h	48h	7 day	
0%									
5%									
6%									
8%									
11%									
15%									

* coefficient of variation = standard deviation x 100/mean

2. Dunnett's Procedure or Steel's Many-One Rank Test or Wilcoxon Rank Sum Test (with Bonferroni adjustment) or t-test (with Bonferroni adjustment) as appropriate:

   Is the mean survival at 7 days significantly less (p=0.05) than the control survival for the % effluent corresponding to lethality?

   CRITICAL DILUTION (11%): _____ YES _____ NO

3. Enter percent effluent corresponding to each NOEC\LOEC below:

   a.) NOEC survival = _____% effluent

   b.) LOEC survival = _____% effluent

   c.) NOEC growth = _____% effluent

   d.) LOEC growth = _____% effluent

24-HOUR ACUTE BIOMONITORING REQUIREMENTS: FRESHWATER

The provisions of this section apply to Outfall 001 for whole effluent toxicity testing (biomonitoring)

1. Scope, Frequency and Methodology

a. The permittee shall test the effluent for lethality in accordance with the provisions in this Section. Such testing will determine compliance with the Surface Water Quality Standard, 30 TAC §307.6(e)(2)(B), of greater than 50% survival of the appropriate test organisms in 100% effluent for a 24-hour period.

b. Within 60 days of initial discharge of the 2.0 MGD facility, or when discharged flows exceed 1.0 MGD, whichever comes first, the toxicity tests specified shall be conducted once per six months. The permittee shall conduct the following toxicity tests utilizing the test organisms, procedures, and quality assurance requirements specified in this section of the permit and in accordance with "Methods for Measuring the Acute Toxicity of Effluents and Receiving Waters to Freshwater and Marine Organisms, Fifth Edition" (EPA-821-R-02-012), or the most recent update thereof:

1) Acute 24-hour static toxicity test using the water flea (*Daphnia pulex* or *Ceriodaphnia dubia*). A minimum of five replicates with eight organisms per replicate shall be used in the control and in each dilution.

2) Acute 24-hour static toxicity test using the fathead minnow (*Pimephales promelas*). A minimum of five replicates with eight organisms per replicate shall be used in the control and in each dilution.

A valid test result must be submitted for each reporting period. The permittee must report, then repeat, an invalid test during the same reporting period. The repeat test shall include the control and the 100% effluent dilution and use the appropriate number of organisms and replicates, as specified above. An invalid test is herein defined as any test failing to satisfy the test acceptability criteria, procedures, and quality assurance requirements specified in the test methods and permit.

c. In addition to an appropriate control, a 100% effluent concentration shall be used in the toxicity tests. The control and/or dilution water shall consist of a standard, synthetic, moderately hard, reconstituted water.

d. This permit may be amended to require a Whole Effluent Toxicity (WET) limit, a Best Management Practice (BMP), Chemical-Specific (CS) limits, additional toxicity testing, and/or other appropriate actions to address toxicity. The permittee may be required to conduct additional biomonitoring tests and/or a Toxicity Reduction Evaluation (TRE) if biomonitoring data indicate multiple numbers of unconfirmed toxicity events.

2. Required Toxicity Testing Conditions

a. Test Acceptance - The permittee shall repeat any toxicity test, including the control, if the control fails to meet a mean survival equal to or greater than 90%.

b. Dilution Water - In accordance with item 1.c., the control and/or dilution water shall consist of a standard, synthetic, moderately hard, reconstituted water.

c. Samples and Composites

1) The permittee shall collect one flow-weighted 24-hour composite sample from Outfall 001. A 24-hour composite sample consists of a minimum of 12 effluent portions collected at equal time intervals representative of a 24-hour operating day and combined proportional to flow, or a sample continuously collected proportional to flow over a 24-hour operating day.

2) The permittee shall collect the 24-hour composite samples such that the samples are representative of any periodic episode of chlorination, biocide usage, or other potentially toxic substance discharged on an intermittent basis.

3) The permittee shall initiate the toxicity tests within 36 hours after collection of the last portion of the 24-hour composite sample. Samples shall be maintained at a temperature of 0-6 degrees Centigrade during collection, shipping, and storage.

4) If Outfall 001 ceases discharging during the collection of the effluent composite sample, the requirements for the minimum number of effluent portions are waived. However, the permittee must have collected a composite sample volume sufficient for completion of the required test. The abbreviated sample collection, duration, and methodology must be documented in the full report required in Part 3 of this Section.

5) The effluent samples shall not be dechlorinated after sample collection.

3. Reporting

All reports, tables, plans, summaries, and related correspondence required in any Part of this Section shall be submitted to the attention of the Water Quality Standards Team (MC 150) of the Water Quality Division. All DMRs, including DMRs with biomonitoring data, should be sent to the Water Quality Compliance Monitoring Team of the Enforcement Division (MC 224).

a. The permittee shall prepare a full report of the results of all tests conducted pursuant to this permit in accordance with the Report Preparation Section of "Methods for Measuring the Acute Toxicity of Effluents and Receiving Waters to Freshwater and Marine Organisms, Fifth Edition" (EPA-821-R-02-012), or the most recent update thereof, for every valid and invalid toxicity test initiated. All full reports shall be retained for 3 years at the plant site and shall be available for inspection by TCEQ personnel.

b. A full report must be submitted with the first valid biomonitoring test results for each test species and with the first test results any time the permittee subsequently employs a different test laboratory. Full reports need not be submitted for subsequent testing unless specifically requested. The permittee shall routinely report the results of each biomonitoring test on the Table 2 forms provided with this permit. All Table 2 reports must include the information specified in the Table 2 form attached to this permit.

1) Semiannual biomonitoring test results are due on or before January 20th and July 20th for biomonitoring conducted during the previous 6 month period.

2) Quarterly biomonitoring test results are due on or before January 20th, April 20th, July 20th, and October 20th, for biomonitoring conducted during the previous calendar quarter.

c. Enter the following codes on the DMR for the appropriate parameters for valid tests only:

1) For the water flea, Parameter TIE3D, enter a "0" if the mean survival at 24-hours is greater than 50% in the 100% effluent dilution; if the mean survival is less than or equal to 50%, enter a "1."

2) For the fathead minnow, Parameter TIE6C, enter a "0" if the mean survival at 24-hours is greater than 50% in the 100% effluent dilution; if the mean survival is less than or equal to 50%, enter a "1."

d. Enter the following codes on the DMR for retests only:

1) For retest number 1, Parameter 22415, enter a "0" if the mean survival at 24-hours is greater than 50% in the 100% effluent dilution; if the mean survival is less than or equal to 50%, enter a "1."

2) For retest number 2, Parameter 22416, enter a "0" if the mean survival at 24-hours is greater than 50% in the 100% effluent dilution; if the mean survival is less than or equal to 50%, enter a "1."

4. Persistent Mortality

The requirements of this Part apply when a toxicity test demonstrates significant lethality, here defined as a mean mortality of 50% or greater to organisms exposed to the 100% effluent concentration after 24-hours.

a. The permittee shall conduct 2 additional tests (retests) for each species that demonstrates significant lethality. The two retests shall be conducted once per week for 2 weeks. Five effluent dilution concentrations in addition to an appropriate control shall be used in the retests. These additional effluent concentrations are 6%, 13%, 25%, 50% and 100% effluent. The first retest shall be conducted within 15 days of the laboratory determination of significant lethality. All test results shall be submitted within 20 days of test completion of the second retest. Test completion is defined as the 24th hour. The retests shall also be reported on the DMRs as specified in Part 3.d.

b. If one or both of the two retests specified in item 4.a. demonstrates significant lethality, the permittee shall initiate the TRE requirements as specified in Part 5 of this Section.

5. Toxicity Reduction Evaluation

a. Within 45 days of the retest that demonstrates significant lethality, the permittee shall submit a General Outline for initiating a TRE. The outline shall include, but not be limited to, a description of project personnel, a schedule for obtaining consultants (if needed), a discussion of influent and/or effluent data available for review, a sampling and analytical schedule, and a proposed TRE initiation date.

b. Within 90 days of the retest that demonstrates significant lethality, the permittee shall submit a TRE Action Plan and Schedule for conducting a TRE. The plan shall specify the approach and methodology to be used in performing the TRE. A Toxicity Reduction Evaluation is a step-wise investigation combining toxicity testing with physical and chemical analysis to determine actions necessary to eliminate or reduce effluent toxicity to a level not effecting significant lethality at the critical dilution. The TRE Action Plan shall lead to the successful elimination of significant lethality

for both test species defined in item 1.b. As a minimum, the TRE Action Plan shall include the following:

1) Specific Activities - The TRE Action Plan shall specify the approach the permittee intends to utilize in conducting the TRE, including toxicity characterizations, identifications, confirmations, source evaluations, treatability studies, and/or alternative approaches. When conducting characterization analyses, the permittee shall perform multiple characterizations and follow the procedures specified in the document entitled, "Methods for Aquatic Toxicity Identification Evaluations: Phase I Toxicity Characterization Procedures" (EPA/600/6-91/003), or alternate procedures. The permittee shall perform multiple identifications and follow the methods specified in the documents entitled, "Methods for Aquatic Toxicity Identification Evaluations, Phase II Toxicity Identification Procedures for Samples Exhibiting Acute and Chronic Toxicity" (EPA/600/R-92/080) and "Methods for Aquatic Toxicity Identification Evaluations, Phase III Toxicity Confirmation Procedures for Samples Exhibiting Acute and Chronic Toxicity" (EPA/600/R-92/081). All characterization, identification, and confirmation tests shall be conducted in an orderly and logical progression;

2) Sampling Plan - The TRE Action Plan should describe sampling locations, methods, holding times, chain of custody, and preservation techniques. The effluent sample volume collected for all tests shall be adequate to perform the toxicity characterization/ identification/ confirmation procedures, and chemical-specific analyses when the toxicity tests show significant lethality. Where the permittee has identified or suspects specific pollutant(s) and/or source(s) of effluent toxicity, the permittee shall conduct, concurrent with toxicity testing, chemical-specific analyses for the identified and/or suspected pollutant(s) and/or source(s) of effluent toxicity;

3) Quality Assurance Plan - The TRE Action Plan should address record keeping and data evaluation, calibration and standardization, baseline tests, system blanks, controls, duplicates, spikes, toxicity persistence in the samples, randomization, reference toxicant control charts, as well as mechanisms to detect artifactual toxicity; and

4) Project Organization - The TRE Action Plan should describe the project staff, project manager, consulting engineering services (where applicable), consulting analytical and toxicological services, etc.

c. Within 30 days of submittal of the TRE Action Plan and Schedule, the permittee shall implement the TRE with due diligence.

d. The permittee shall submit quarterly TRE Activities Reports concerning the progress of the TRE. The quarterly TRE Activities Reports are due on or before April 20th, July 20th, October 20th, and January 20th. The report shall detail information regarding the TRE activities including:

1) results and interpretation of any chemical-specific analyses for the identified and/or suspected pollutant(s) performed during the quarter;

2) results and interpretation of any characterization, identification, and confirmation tests performed during the quarter;

3) any data and/or substantiating documentation which identifies the pollutant(s) and/or source(s) of effluent toxicity;

4) results of any studies/evaluations concerning the treatability of the facility's effluent toxicity;

5) any data which identifies effluent toxicity control mechanisms that will reduce effluent toxicity to the level necessary to eliminate significant lethality; and

6) any changes to the initial TRE Plan and Schedule that are believed necessary as a result of the TRE findings.

Copies of the TRE Activities Report shall also be submitted to the U.S. EPA Region 6 office.

e. During the TRE, the permittee shall perform, at a minimum, quarterly testing using the more sensitive species; testing for the less sensitive species shall continue at the frequency specified in Part 1.b.

f. If the effluent ceases to effect significant lethality (herein as defined below) the permittee may end the TRE. A "cessation of lethality" is defined as no significant lethality for a period of 12 consecutive weeks with at least weekly testing. At the end of the 12 weeks, the permittee shall submit a statement of intent to cease the TRE and may then resume the testing frequency specified in Part 1.b. The permittee may only apply the "cessation of lethality" provision once.

This provision accommodate situations where operational errors and upsets, spills, or sampling errors triggered the TRE, in contrast to a situation where a single toxicant or group of toxicants cause lethality. This provision does not apply as a result of corrective actions taken by the permittee. "Corrective actions" are herein defined as proactive efforts which eliminate or reduce effluent toxicity. These include, but are not limited to, source reduction or elimination, improved housekeeping, changes in chemical usage, and modifications of influent streams and/or effluent treatment.

The permittee may only apply this cessation of lethality provision once. If the effluent again demonstrates significant lethality to the same species, the permit will be amended to add a WET limit with a compliance period, if appropriate. However, prior to the effective date of the WET limit, the permittee may apply for a permit amendment removing and replacing the WET limit with an alternate toxicity control measure by identifying and confirming the toxicant and/or an appropriate control measure.

g. The permittee shall complete the TRE and submit a Final Report on the TRE Activities no later than 18 months from the last test day of the retest that demonstrates significant lethality. The permittee may petition the Executive Director (in writing) for an extension of the 18-month limit. However, to warrant an extension the permittee must have demonstrated due diligence in their pursuit of the TIE/TRE and must prove that circumstances beyond their control stalled the TIE/TRE. The report shall specify the control mechanism(s) that will, when implemented, reduce effluent toxicity as specified in item 5.g. The report will also specify a corrective action schedule for implementing the selected control mechanism(s). A copy of the TRE Final Report shall also be submitted to the U.S. EPA Region 6 office.

h. Within 3 years of the last day of the test confirming toxicity, the permittee shall comply with 30 TAC 307.6.(e)(2)(B), which requires greater than 50% survival of the test organism in 100% effluent at the end of 24-hours. The permittee may petition the Executive Director (in writing) for an extension of the 3-year limit. However, to warrant an extension the permittee must have demonstrated due diligence in their pursuit of the TIE/TRE and must prove that circumstances beyond their control stalled the TIE/TRE.

The requirement to comply with 30 TAC 307.6.(e)(2)(B) may be exempted upon proof that toxicity is caused by an excess, imbalance, or deficiency of dissolved salts. This exemption excludes instances where individually toxic components (e.g. metals) form a salt compound. Following the exemption, the permit may be amended to include an ion-adjustment protocol, alternate species testing, or single species testing.

i. Based upon the results of the TRE and proposed corrective actions, this permit may be amended to modify the biomonitoring requirements where necessary, to require a compliance schedule for implementation of corrective actions, to specify a WET limit, to specify a BMP, and/or to specify a CS limit.

TABLE 2 (SHEET 1 OF 2)

WATER FLEA SURVIVAL

GENERAL INFORMATION

	Time (am/pm)	Date
Composite Sample Collected		
Test Initiated		

PERCENT SURVIVAL

Time	Rep	Percent effluent (%)					
		0%	6%	13%	25%	50%	100%
24h	A						
	B						
	C						
	D						
	E						
	MEAN						

Enter percent effluent corresponding to the LC50 below:

24 hour LC50 = _____% effluent

95% confidence limits:

Method of LC50 calculation:

TABLE 2 (SHEET 2 OF 2)

FATHEAD MINNOW SURVIVAL

GENERAL INFORMATION

	Time (am/pm)	Date
Composite Sample Collected		
Test Initiated		

PERCENT SURVIVAL

Time	Rep	Percent effluent (%)					
		0%	6%	13%	25%	50%	100%
24h	A						
	B						
	C						
	D						
	E						
	MEAN						

Enter percent effluent corresponding to the LC50 below:

24 hour LC50 = _____% effluent

95% confidence limits:

Method of LC50 calculation:

CONTRIBUTING INDUSTRIES AND PRETREATMENT REQUIREMENTS

1. The permittee shall operate an industrial pretreatment program in accordance with Sections 402(b)(8) and (b)(9) of the Clean Water Act, the General Pretreatment Regulations (40 CFR Part 403) and the approved City of Houston POTW pretreatment program submitted by the permittee. The pretreatment program was approved on **November 27, 1984**, and modified on **February 26, 1993.** The legal authority and the POTW's pretreatment program are not in compliance with the current 40 CFR Part 403 regulations *[rev. Federal Register/ Vol. 70/ No. 198/ Friday, October 14, 2005/ Rules and Regulations, pages 60134-60798]* and the 30 TAC Chapter 315, as amended. In order to ensure that the permittee has a program to assure compliance with such pretreatment standards and requirements, the permittee shall submit a modification to their pretreatment program containing all required [*i.e.* more stringent] Streamlining Rule provisions to the Executive Director in care of the Wastewater Permitting Section within six (6) months of the issued date of the next permit action of TPDES Permit No WQ0010495101. The POTW pretreatment program is hereby incorporated by reference and shall be implemented in a manner consistent with the following requirements:

   a. Industrial user (IU) information shall be kept current according to 40 CFR §§403.8(f)(2)(i) and (ii) and updated at a frequency set forth in the approved pretreatment program to reflect accurate characterization of all IUs;

   b. The frequency and nature of IU compliance monitoring activities by the permittee shall be consistent with the approved POTW pretreatment program and commensurate with the character, consistency, and volume of waste. The permittee is required to inspect and sample the effluent from each significant industrial user (SIU) at least once per year, except as specified in 40 CFR §403.8 (f)(2)(v). This is in addition to any industrial self-monitoring activities;

   c. The permittee shall enforce and obtain remedies for IU noncompliance with applicable pretreatment standards and requirements and the approved POTW pretreatment program;

   d. The permittee shall control through permit, order, or similar means, the contribution to the POTW by each IU to ensure compliance with applicable pretreatment standards and requirements and the approved POTW pretreatment program. In the case of SIUs (identified as significant under 40 CFR §403.3 (v)), this control shall be achieved through individual or general control mechanisms, in accordance with 40 CFR §403.8(f)(1)(iii).

      Both individual and general control mechanisms must be enforceable and contain, at a minimum, the following conditions:

      (1) Statement of duration (in no case more than five years);
      (2) Statement of non-transferability without, at a minimum, prior notification to the POTW and provision of a copy of the existing control mechanism to the new owner or operator;
      (3) Effluent limits, which may include enforceable best management practices (BMPs), based on applicable general pretreatment standards, categorical pretreatment standards, local limits, and State and local law;
      (4) Self-monitoring, sampling, reporting, notification and record keeping requirements, identification of the pollutants to be monitored (including, if applicable, the process for seeking a waiver for a pollutant neither present nor expected to be present in the IU's discharge in accordance with 40 CFR §403.12(e)(2), or a specific waived pollutant in the case of an individual control mechanism), sampling location, sampling frequency, and sample type, based on the applicable general pretreatment standards in 40 CFR Part 403, categorical pretreatment standards, local limits, and State and local law;

(5) Statement of applicable civil and criminal penalties for violation of pretreatment standards and requirements, and any applicable compliance schedule. Such schedules may not extend the compliance date beyond federal deadlines; and;

(6) Requirements to control slug discharges, if determined by the POTW to be necessary.

e. In order to implement 40 CFR §403.8(f)(1)(iii)(A)(2), a monitoring waiver for a pollutant neither present nor expected to be present in the IU's discharge is not effective in the general control mechanism until after the POTW has provided written notice to the SIU that such a waiver request has been granted in accordance with 40 CFR §403.12(e)(2).

f. The permittee shall evaluate whether each SIU needs a plan or other action to control slug discharges, in accordance with 40 CFR §403.8(f)(2)(vi). If the POTW decides that a slug control plan is needed, the plan shall contain at least the minimum elements required in 40 CFR §403.8(f)(2)(vi);

g. The permittee shall provide adequate staff, equipment, and support capabilities to carry out all elements of the pretreatment program; and,

h. The approved program shall not be modified by the permittee without the prior approval of the Executive Director care of the Wastewater Permitting Section, according to 40 CFR §403.18.

2. The permittee is under a continuing duty to: establish and enforce specific local limits to implement the provisions of 40 CFR §403.5, develop and enforce local limits as necessary, and modify the approved pretreatment program as necessary to comply with federal, state and local law, as amended. The permittee may develop BMPs to implement paragraphs 40 CFR §§403.5(c)(1) and (c)(2). Such BMPs shall be considered local limits and pretreatment standards.

The permittee is required to effectively enforce such limits and to modify their pretreatment program, including the Legal Authority, Enforcement Response Plan and/or Standard Operating Procedures, if required by the Executive Director to reflect changing conditions at the POTW. Substantial modifications will be approved in accordance with 40 CFR §403.18, and modifications will become effective upon approval by the Executive Director in accordance with 40 CFR §403.18.

Upon approval by the Executive Director of the substantial modification to this approved POTW pretreatment program, the requirement to develop and enforce specific prohibitions and/or limits to implement the prohibitions and limits set forth in 40 CFR §§403.5 (a)(1), (b), (c)(1) and (3), and (d) is a condition of this permit. The specific prohibitions set out in 40 CFR §403.5(b) shall be enforced by the permittee unless modified under this provision.

3. The permittee shall prepare annually a list of IUs which during the preceding twelve (12) months were in significant noncompliance (SNC) with applicable pretreatment requirements. For the purposes of this section of the permit, "CONTRIBUTING INDUSTRIES AND PRETREATMENT REQUIREMENTS", SNC shall be determined based upon the more stringent of either criteria established at 40 CFR §403.8(f)(2)(viii) *[rev. 10/14/05]* or criteria established in the approved POTW pretreatment program. This list is to be published annually during the month of **November** in a newspaper of general circulation that provides meaningful public notice within the jurisdiction(s) served by the POTW.

In addition, each **November** the permittee shall submit an updated pretreatment program annual status report, in accordance with 40 CFR §403.12(i), to the TCEQ Storm Water & Pretreatment Team of the Water Quality Division. The report shall contain the following information as well as the information on the attached tables

in this section. The report summary shall be submitted on the Pretreatment Performance Summary (PPS) form [TCEQ-20218].

a. An updated list of all regulated IUs as indicated in this section. For each listed IU, the following information shall be included:

(1) Standard Industrial Classification (SIC) or North American Industry Classification System (NAICS) code and categorical determination;

(2) If the pretreatment program has been modified and approved to incorporate reduced monitoring for any of the categorical IUs as provided by 40 CFR Part 403 *[rev. 10/14/05]*, then the list must also identify:

* categorical IUs subject to the conditions for reduced monitoring and reporting requirements under 40 CFR §§ 403.12(e)(1) and (3);
* those IUs that are non-significant categorical industrial users (NSCIUs) under 40 CFR §403.3(v)(2); and
* those IUs that are middle tier categorical industrial users (MTCIUs) under 40 CFR §403.12(e)(3).

(3) Control mechanism status.

* Indicate whether the IU has an effective individual or general control mechanism, and the date such document was last issued, reissued, or modified;
* Indicate which IUs were added to the system, or newly identified, during the pretreatment year reporting period;
* Include the type of general control mechanisms; and
* Report all NSCIU annual evaluations performed, as applicable.

(4) A summary of all compliance monitoring activities performed by the POTW during the pretreatment year reporting period. The following information shall be reported:

* Total number of inspections performed; and
* Total number of sampling events conducted.

(5) Status of IU compliance with effluent limitations, reporting, and narrative standard (which may include enforceable BMPs, narrative limits, and/or operational standards) requirements. Compliance status shall be defined as follows:

* Compliant (C) - no violations during the pretreatment year reporting period;
* Non-compliant (NC) - one or more violations during the pretreatment year reporting period but does not meet the criteria for SNC; and
* Significant Noncompliance (SNC) - in accordance with requirements described above in this section.

(6) For noncompliant IUs, indicate the nature of the violations, the type and number of actions taken (notice of violation, administrative order, criminal or civil suit, fines or penalties collected, etc.) and current compliance status. If any IU was on a schedule to attain compliance with effluent limits or narrative standards, indicate the date the schedule was issued and the date compliance is to be attained.

b. A list of each IU whose authorization to discharge was terminated or revoked during the pretreatment year reporting period and the reason for termination.

c. A report on any interference, pass through, upset, or POTW permit violations known or suspected to be caused by IUs and response actions taken by the permittee

d. An original newspaper public notice, or copy of the newspaper publication with official affidavit, of the list of significantly noncompliant IUs, giving the name of the newspaper and the date the list was published.

e. The information required by this section including the information on the attached tables must be submitted. The permittee may submit the information in tabular form using the example table format provided. Please attach on a separate sheet those explanations to document various pretreatment activities, including IU permits that have expired, BMP violations, and required sampling events not conducted by the permittee as required.

f. A summary of changes to the POTW's pretreatment program that have not been previously reported to the Approval Authority.

4. The permittee shall provide adequate written notification to the Executive Director care of the Wastewater Permitting Section (MC 148) of the Water Quality Division, within 30 days of the permittee's knowledge of the following:

a. Any new introduction of pollutants into the treatment works from an indirect discharger which would be subject to Sections 301 and 306 of the Clean Water Act if the indirect discharger was directly discharging those pollutants; and

b. Any substantial change in the volume or character of pollutants being introduced into the treatment works by a source introducing pollutants into the treatment works at the time of issuance of the permit.

Adequate notice shall include information on the quality and quantity of effluent to be introduced into the treatment works, and any anticipated impact of the change on the quality or quantity of effluent to be discharged from the POTW.

Revised July 2007

TPDES Pretreatment Program Annual Report Form
for Updated Industrial Users List
Reporting month/year: _____, ____ to _____, ____
TPDES Permit No. _____ Permittee: _____ Treatment Plant:

PRETREATMENT PROGRAM STATUS REPORT UPDATED INDUSTRIAL USERS1 LIST																
INDUS-TRIAL USER NAME	SIC or NAICS CODE	CATEGOR-ICAL DETERMI-NATION (include 40 CFR citation and NSCIU or MTCIU status, if applicable)	CONTROL MECHANISM				NEW USER[2] Y or N	TIMES INSPECTED BY THE CA	TIMES SAMPLED BY THE CA	COMPLIANCE STATUS DURING THIS PRETREATMENT YEAR REPORTING PERIOD3 (C = Compliant, NC = Noncompliant, SNC = Significant Noncompliance)						
			Y or N or NR	IND or GEN or NR4	LAST ACTION5	TBLLS or TBLLs only6				REPORTS				CERTIFI-CATIONS	EFFLUENT LIMITS	NARRATIVE STANDARDS
										BMR	90-DAY	SEMI-ANNUAL	SELF MONI-TORING7	NSCIU		

1 All significant industrial users (SIUs), non-significant categorical industrial user (NSCIU) as defined in 40 CFR §403.3(v)(2), and/or middle tier categorical industrial user (MTCIU) as defined in 40 CFR §403.12(e)(3). Please do not include non-significant noncategorical IUs that are covered under best management practices (BMPs) or general control mechanisms.

2 Indicate whether the IU is a new user. If the answer is No or N, then indicate the expiration date of the last issued IU permit.

3 The term SNC applies to a broader range of violations, such as daily maximum, long-term average, instantaneous limits, narrative standards (which may include enforceable BMPs, narrative limits and/or operational standards). Any other violation, or group of violations, which the POTW determines will adversely affect the operation or implementation of the local Pretreatment Program now includes BMP violations (40 CFR §403.8(f)(2)(viii)(H)).

4 Code NR= None required (NSCIUs only); IND = individual control mechanism; GEN = general control mechanism. Include as a footnote (or on a separate page) the name of the general control mechanism used for similar groups of IUs, identify the similar types of operations and types of wastes that are the same for each general control mechanism. Any BMPs through general control mechanisms that are applied to nonsignificant IUs need to be reported separately, e.g. the sector type and BMP description.

5 Permit or NSCIU evaluations as applicable

6 Indicate whether the IU is subject to: 1) technically based local limits (TBLLs) that are more stringent then categorical pretreatment standards; or 2) subject only to local limits (TBLLs only) .

7 For those IUs where a monitoring waiver has been granted, please add the code "W" (after either C, NC, or SNC codes) and indicate the pollutant(s) for which the waiver has been granted.

TPDES Pretreatment Program Annual Report Form for Industrial Inventory Modifications

Reporting month/year: _____, ____ to _____, ____

TPDES Permit No. _____ Permittee: _____ Treatment Plant:

INDUSTRIAL INVENTORY MODIFICATIONS					
FACILITY NAME, ADDRESS AND CONTACT PERSON	ADD, DELETE, CHANGE (Including categorical reclassification to NSCIU or MTCIU)	IF DELETION:	IF ADDITION OR SIGNIFICANT CHANGE:		
		REASON FOR DELETION	PROCESS DESCRIPTION	POLLUTANTS (Including any sampling waiver given for each pollutant not present)	FLOW RATE[8] (In gallons per day) R=Regulated U=Unregulated T=Total

[8] For NSCIUs, total flow must be given, if regulated flow is not determined.

TPDES Pretreatment Program Annual Report Form
for Enforcement Actions Taken

Reporting month/year: _____, ____ to _____, ____

TPDES Permit No. _____ Permittee: _____ Treatment Plant: _____ Overall % SNC_____
% SNC9 based on: Effluent limit violations_____% Reporting violations_____% Narrative Standard violations _____%

NONCOMPLIANT USERS - ENFORCEMENT ACTIONS TAKEN															
IU NAME	NATURE OF VIOLATION10				NUMBER OF ACTIONS TAKEN					PENALTIES COLLECTED	COMPLIANCE SCHEDULE			CURRENT STATUS RETURN TO COMPLIANCE: YES OR NO	COMMENTS
	EFFLUENT LIMITS	REPORTS	NSCIU CERTIFICA-TIONS	NARRATIVE STANDARDS	NOV	AO	CIVIL	CRIMINAL	OTHER		Y or N	DATE ISSUED	DATE DUE		

9 # %
___ ___ Pretreatment Standards [WENDB-PSNC] (Local Limits/Categorical Standards)
___ ___ Reporting Requirements [WENDB-PSNC]
___ ___ Narrative Standards

10 Please specify a separate number for type of violation, e.g. report, notification, and/or NSCIU certification.

City of Houston
TPDES Permit No. WQ0010495142

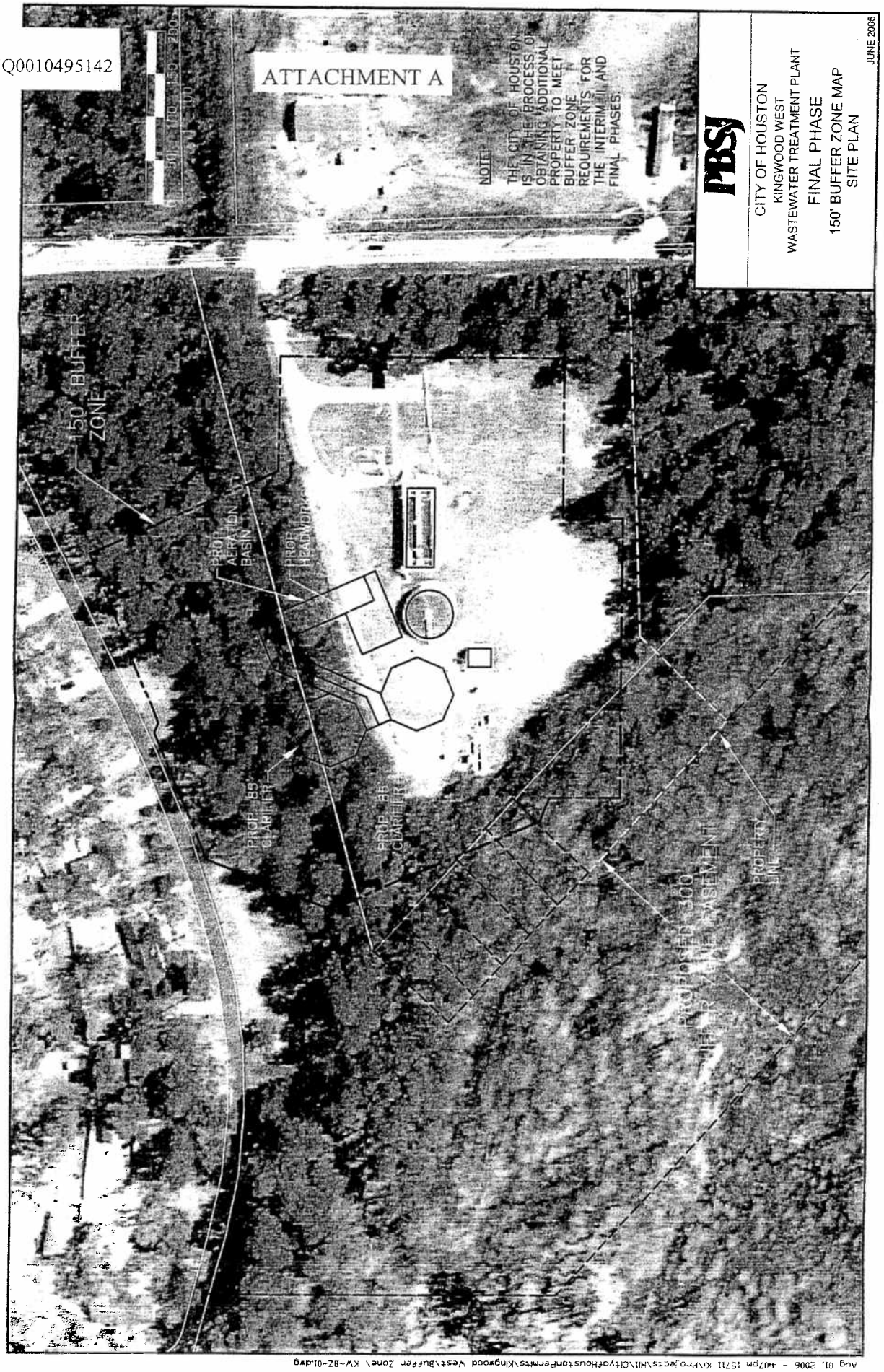

LSP-110
INFLUENT PUMP
TYPE: CENTRIFUGAL
CAPACITY: 700 GPM @ 58 FT. TDH
MOTOR HP: 25
SPEED: VARIABLE (VFD)
MATL.: CAST IRON

LSP-120
INFLUENT PUMP
TYPE: CENTRIFUGAL
CAPACITY: 2,100 GPM @ 58 FT. TDH
MOTOR HP: 25
SPEED: VARIABLE (VFD)
MATL.: CAST IRON

LSP-130 & LSP-140
INFLUENT PUMPS
TYPE: CENTRIFUGAL
CAPACITY: 2,800 GPM @ 58 FT TDH
MOTOR HP: 75
SPEED: 1,185 RPM
MATL.: CAST IRON

BL
AERATION BLOWERS
TYPE: MULTI-STAGE CENTRIFUGAL
CAPACITY: 2,600 SCFM @ 9 PSIG
MOTOR HP: 200
SPEED: VARIABLE
MATL: CAST IRON

RS-210
INFLUENT SCREEN
TYPE: INTERNALLY FED ROTARY SCREEN
SCREEN OPENING: 0.08 INCHES
CYLINDER SPEED: 3 & 6 RPM
MOTOR HP: 5.0
SPEED: 2 SPEED
MATL.: STAINLESS STEEL

BC-250
BELT CONVEYOR
WIDTH: 24 INCH
MOTOR HP: 50

SC-260
COMPACTING SCREW CONVEYOR
SCREW DIA: 14 INCHES
MOTOR HP: 7.5
MATL.: STAINLESS STEEL

AB-310/320/330
AERATION BASINS
SIZE: 20'-0"W X 65'-0"L X 16'-6"D
WORKING VOLUME: 158,440 GALLONS PER BASIN
MATL.: CONCRETE BASIN
AERATION: FINE BUBBLE DIFFUSERS

CL-410/420
CLARIFERS
SIZE: 65' DIAM (OCTAGONAL)
MATL.: CONCRETE BASIN
TYPE: CENTER PIER SUPPORTED
MOTOR HP: 1.0

SCP-413
SCUM PUMP
CAPACITY: 250 GPM @ 28 FT TDH
DRIVE HP: 5 HP
MATL.: STAINLESS STEEL
TYPE: SELF-PRIMING CENTRIFUGAL

RASP-411/412/421/422
RETURN SLUDGE PUMPS
CAPACITY: 350 GPM @ 4 FT TDH
SIZE: 10-INCH
MATL.: STAINLESS STEEL
TYPE: AIRLIFT

WASP-810
WASTE ACTIVATED SLUDGE PUMP
CAPACITY: 200 GPM @ 25 FT
TDH MATL.: CAST IRON TYPE:
SELF PRIMING CENTRIFUGAL

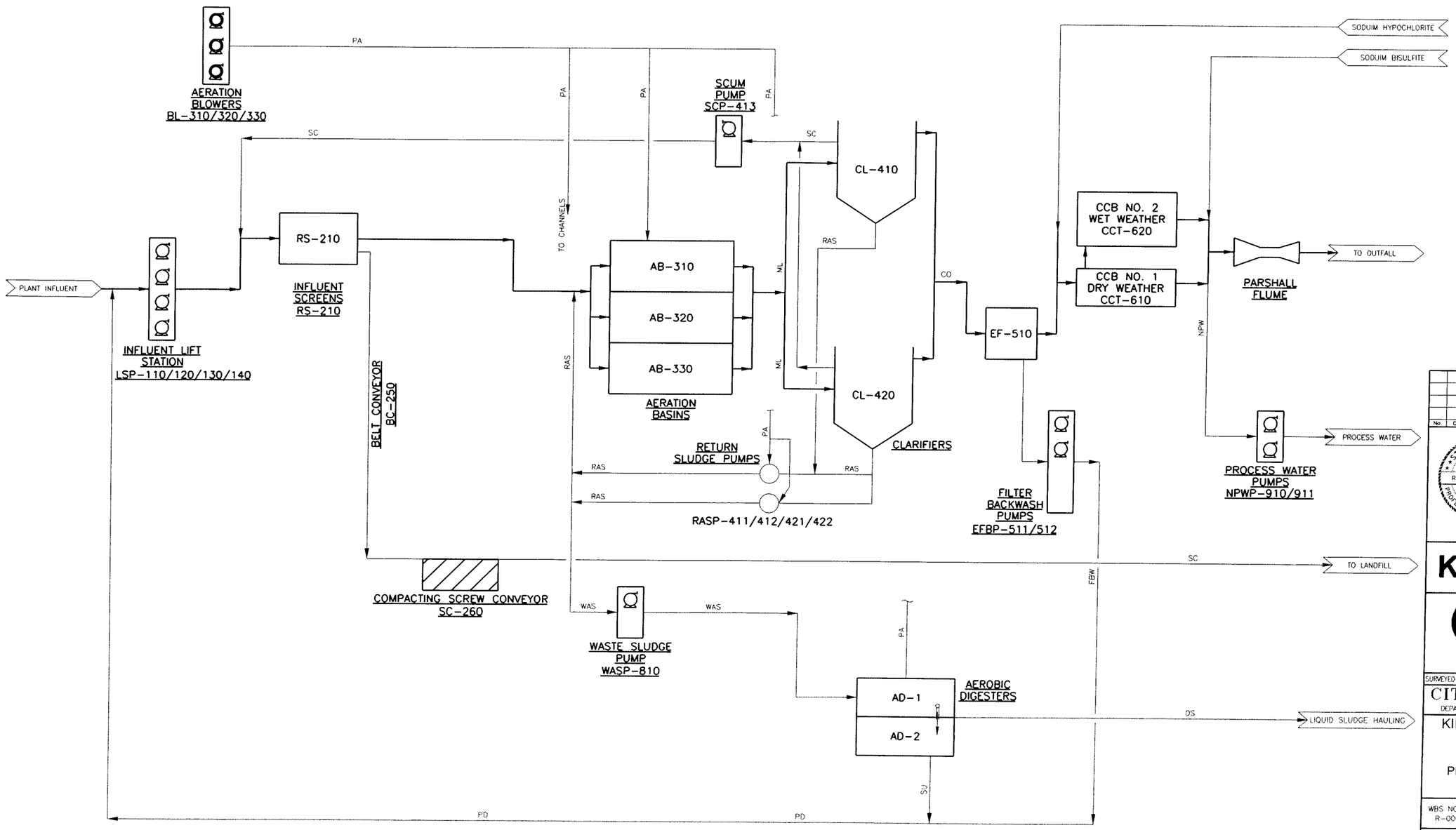

EF-510
EFFLUENT FILTER
BASIN SIZE: 8'-6"W x 16'-0"L x 8'-6"D
NO. OF FILTER DISCS: 12
FILTER MEDIA: CLOTH
DRIVE MOTOR HP: 3/4

EFBP-511/512
EFFLUENT FILTER BACKWASH PUMP
CAPACITY: 130 GPM @ 25 FT TDH
DRIVE HP: 2
MATL: CAST IRON
TYPE: SELF-PRIMING CENTRIFUGAL

CCT-610
DRY WEATHER CHLORINE CONTACT BASIN
SIZE: 5-6"W x 50'-0"L x 16'-0"D
WORKING VOLUME: 32,912 GALLONS
MATL: CONCRETE BASIN
MAX. DESIGN FLOW: 2.0 MGD
DESIGN DETENTION TIME: 20 MINUTES

CCT-620
WET WEATHER CHLORINE CONTACT BASIN
SIZE: 16-6"W x 50'-0"L x 16'-0"D
WORKING VOLUME: 98,736 GALLONS
MATL: CONCRETE BASIN
MAX. DESIGN FLOW: 6.0 MGD
DESIGN DETENTION TIME: 20 MINUTES

NPWP-910/911
NON-POTABLE WATER PUMPS
CAPACITY: 140 GPM @ 173 FT TDH
DRIVE HP: 15
MATL: CAST IRON
TYPE: VERTICAL TURBINE

No.	Date	Revisions	App

STATE OF TEXAS
ROGER C. BROWN
52635
LICENSED
PROFESSIONAL ENGINEER

KGI Kalluri Group, Inc.
Consulting Engineers & Project Managers

Binkley & Barfield
consulting engineers
1710 Seamist Drive
Houston, Texas 77008-3189
(713) 869-3433

SURVEYED BY: GEOSOLUTIONS FIELD BOOK NO. : P5359

CITY OF HOUSTON
DEPARTMENT OF PUBLIC WORKS AND ENGINEERING

KINGWOOD WEST WWTP IMPROVEMENTS

PROCESS FLOW DIAGRAM

WBS NO: R-000265-0029-4
DRAWING SCALE: NTS
CITY OF HOUSTON PM: BILL ZOD, P.E.
DWG NO. : G-10
SHEET NO. 10 OF 150

PUBLIC WORKS AND ENGINEERING ACCEPTED & FILED
CITY DRAWING NUMBER
HOUSTON, TEXAS

COLOR TABLE: ENVIRO-RD.ctb
G:\89808 Kingwood West\CADD_G-10 Proc Flow.dwg Dec 14,2007 - 12:35pm swh
ORIGINAL SCALE IN INCHES FOR REDUCED PLANS
0 1 2 3

MCMUD # 48 – WWTP (INTERIM I)

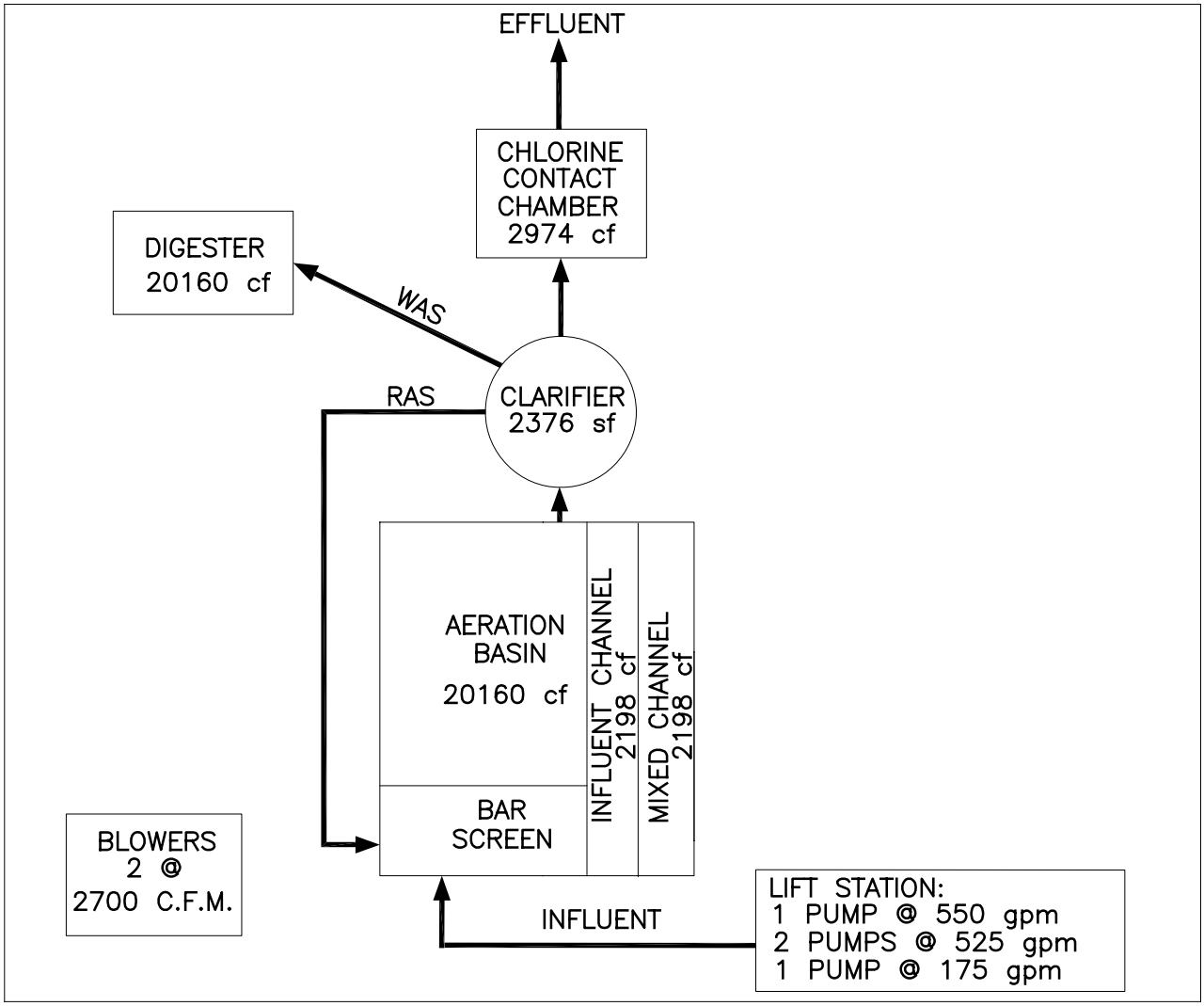

MAJOR UNIT CAPACITIES:

Unit		Capacity
Lift Station	(Firm)	1.77 mgd
	(Total)	2.56 mgd
Aeration Basin		0.50 mgd
Blowers	(Firm)	1.93 mgd
	(Total)	3.86 mgd
Secondary Clarifier	(Design)	1.43 mgd
	(2–Hr. Peak)	2.85 mgd
Chlorine Contact Chamber		1.60 mgd

PERMITTED FLOW

Daily Average	0.378 mgd
2 – hours Peak	788 gpm

JANUARY 2006

K:\Projects\Hi1\CityofHoustonPermits\WWTP\MCMUD_48.dwg

MCMUD # 48 – WWTP (INTERIM II)

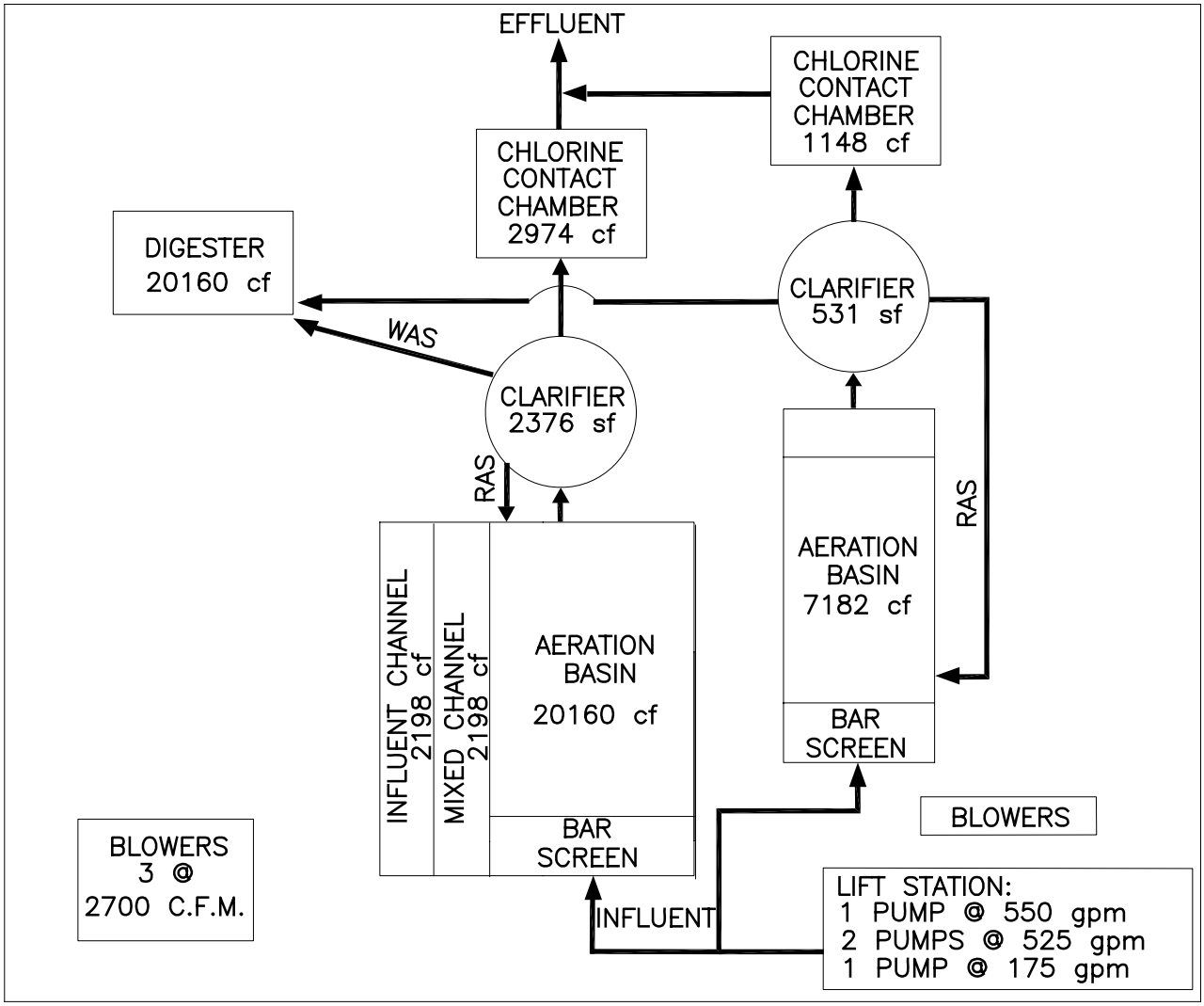

MAJOR UNIT CAPACITIES:

Unit		Capacity
Lift Station	(Firm)	1.77 mgd
	(Total)	2.56 mgd
Aeration Basin		0.67 mgd
Blowers	(Firm)	1.93 mgd
	(Total)	3.86 mgd
Secondary Clarifier	(Design)	1.74 mgd
	(2–Hr. Peak)	3.49 mgd
Chlorine Contact Chamber		2.22 mgd

PERMITTED FLOW

Daily Average	0.528 mgd
2 – hours Peak	1,204 gpm

JANUARY 2006

K:\Projects\Hi1\CityofHoustonPermits\WWTP\MCMUD_48.dwg

MCMUD # 48 – WWTP (FINAL)

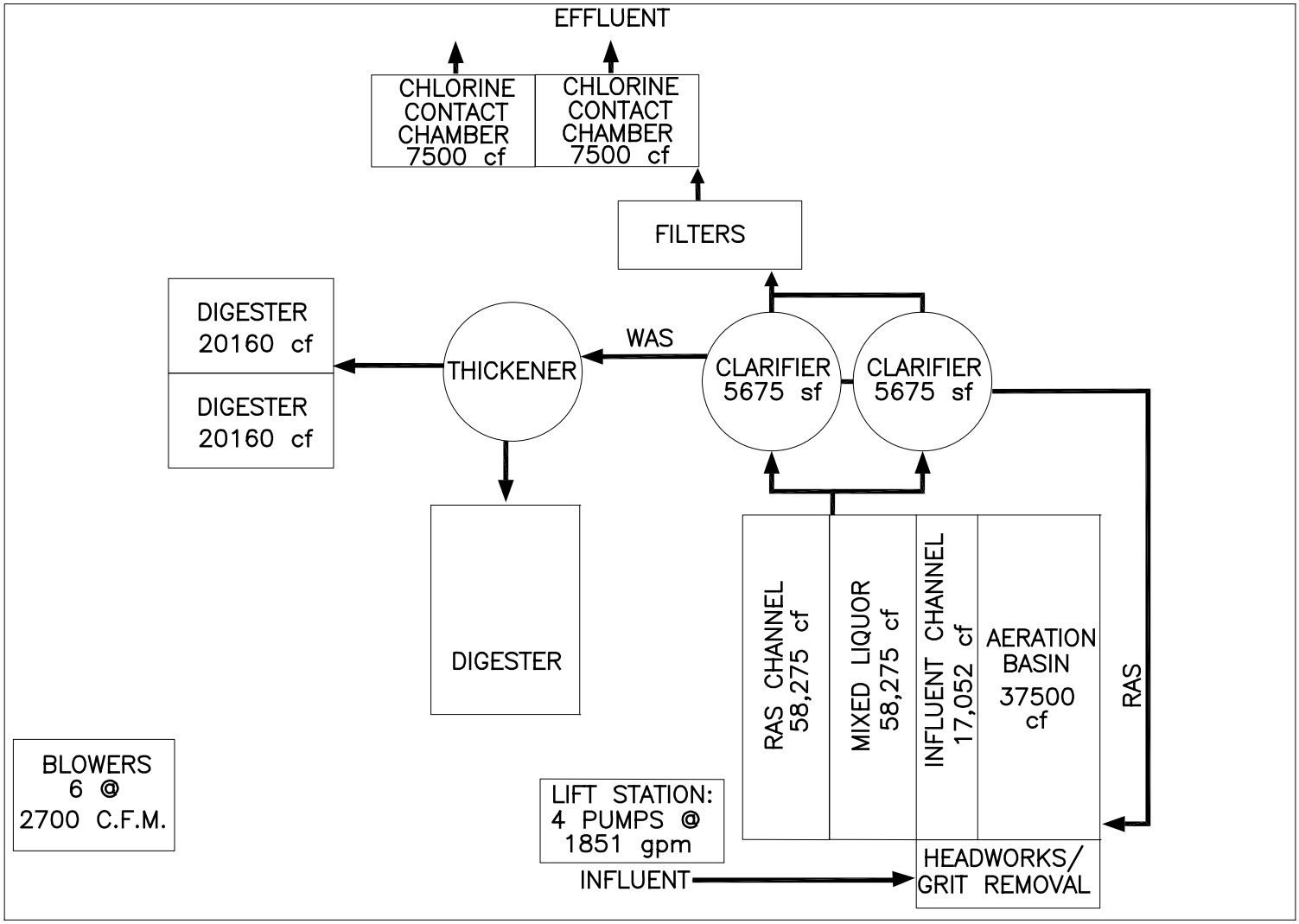

MAJOR UNIT CAPACITIES:

Unit		Capacity
Lift Station	(Firm)	8.00 mgd
	(Total)	10.67 mgd
Aeration Basin		2.00 mgd
Blowers	(Firm)	3.86 mgd
	(Total)	7.72 mgd
Secondary Clarifier	(Design)	6.81 mgd
	(2–Hr. Peak)	13.62 mgd
Chlorine Contact Chamber		8.10 mgd

PERMITTED FLOW

Daily Average	2.0 mgd
2 – hours Peak	5,552 gpm

JANUARY 2006

K:\Projects\Hi1\CityofHoustonPermits\WWTP\MCMUD_48.dwg

APPENDIX D

DISCHARGE PERMIT AND PROCESS DIAGRAM

CEDAR BAYOU WWTP

TPDES PERMIT NO. WQ0010495112
[For TCEQ Office Use Only:
EPA ID No. TX0103667]

TEXAS COMMISSION ON ENVIRONMENTAL QUALITY
P.O. Box 13087
Austin, Texas 78711-3087

This amendment supersedes and replaces TPDES Permit No. WQ0010495112 issued October 7, 2003.

PERMIT TO DISCHARGE WASTES
under provisions of
Section 402 of the Clean Water Act
and Chapter 26 of the Texas Water Code

City of Houston

whose mailing address is

Department of Public Works and Engineering
4545 Groveway Drive
Houston, Texas 77087-1122

is authorized to treat and discharge wastes from the Cedar Bayou Wastewater Treatment Facility, SIC Code 4952

located south of Huffman-Eastgate Road, approximately 6,500 feet west of the intersection of Farm-to-Market Road 1960 and Huffman-Eastgate Road in Harris County, Texas

to Harris County Flood Control District ditch # Q136-00-00; thence to Cedar Bayou Above Tidal in Segment No. 0902 of the Trinity-San Jacinto Coastal Basin

only according with effluent limitations, monitoring requirements and other conditions set forth in this permit, as well as the rules of the Texas Commission on Environmental Quality (TCEQ), the laws of the State of Texas, and other orders of the TCEQ. The issuance of this permit does not grant to the permittee the right to use private or public property for conveyance of wastewater along the discharge route described in this permit. This includes, but is not limited to, property belonging to any individual, partnership, corporation or other entity. Neither does this permit authorize any invasion of personal rights nor any violation of federal, state, or local laws or regulations. It is the responsibility of the permittee to acquire property rights as may be necessary to use the discharge route.

This permit shall expire at midnight, **August 1, 2010**.

ISSUED DATE: MAR 0 9 2007

For the Commission

INTERIM I EFFLUENT LIMITATIONS AND MONITORING REQUIREMENTS Outfall Number 001

1. During the period beginning upon the date of issuance and lasting through the completion of the expansion of the 0.95 million gallon per day (MGD) treatment facilities, the permittee is authorized to discharge subject to the following effluent limitations:

   The daily average flow of effluent shall not exceed 0.82 MGD; nor shall the average discharge during any two-hour period (2-hour peak) exceed 4,549 gallons per minute (gpm).

Effluent Characteristic	Discharge Limitations				Minimum Self-Monitoring Requirements	
	Daily Avg mg/l(lbs/day)	7-day Avg mg/l	Daily Max mg/l	Single Grab mg/l	Report Daily Avg. & Daily Max. Measurement Frequency	Sample Type
Flow, MGD	Report	N/A	Report	N/A	Continuous	Totalizing meter
Carbonaceous Biochemical Oxygen Demand (5-day)	10 (68)	15	25	35	One/week	Composite
Total Suspended Solids	15 (103)	25	40	60	One/week	Composite
Ammonia Nitrogen	3 (21)	6	10	15	One/week	Composite

2. The effluent shall contain a chlorine residual of at least 1.0 mg/l and shall not exceed a chlorine residual of 4.0 mg/l after a detention time of at least 20 minutes (based on peak flow), and shall be monitored daily by grab sample. An equivalent method of disinfection may be substituted only with prior approval of the Executive Director.

3. The pH shall not be less than 6.0 standard units nor greater than 9.0 standard units and shall be monitored twice per month by grab sample.

4. There shall be no discharge of floating solids or visible foam in other than trace amounts and no discharge of visible oil.

5. Effluent monitoring samples shall be taken at the following location(s): Following the final treatment unit.

6. The effluent shall contain a minimum dissolved oxygen of 6.0 mg/l and shall be monitored once per week by grab sample.

INTERIM II EFFLUENT LIMITATIONS AND MONITORING REQUIREMENTS

Outfall Number 001

1. During the period beginning upon the completion of the expansion of the 0.95 million gallon per day (MGD) treatment facilities and lasting through the completion of the expansion of the 1.5 MGD treatment facilities, the permittee is authorized to discharge subject to the following effluent limitations:

   The daily average flow of effluent shall not exceed 0.95 MGD; nor shall the average discharge during any two-hour period (2-hour peak) exceed 4,861 gallons per minute (gpm).

Effluent Characteristic	Discharge Limitations				Minimum Self-Monitoring Requirements	
	Daily Avg mg/l(lbs/day)	7-day Avg mg/l	Daily Max mg/l	Single Grab mg/l	Report Daily Avg. & Daily Max. Measurement Frequency	Sample Type
Flow, MGD	Report	N/A	Report	N/A	Continuous	Totalizing meter
Carbonaceous Biochemical Oxygen Demand (5-day)	10 (79)	15	25	35	One/week	Composite
Total Suspended Solids	15 (119)	25	40	60	One/week	Composite
Ammonia Nitrogen	3 (24)	6	10	15	One/week	Composite

2. The effluent shall contain a chlorine residual of at least 1.0 mg/l and shall not exceed a chlorine residual of 4.0 mg/l after a detention time of at least 20 minutes (based on peak flow), and shall be monitored daily by grab sample. An equivalent method of disinfection may be substituted only with prior approval of the Executive Director.

3. The pH shall not be less than 6.0 standard units nor greater than 9.0 standard units and shall be monitored twice per month by grab sample.

4. There shall be no discharge of floating solids or visible foam in other than trace amounts and no discharge of visible oil.

5. Effluent monitoring samples shall be taken at the following location(s): Following the final treatment unit.

6. The effluent shall contain a minimum dissolved oxygen of 6.0 mg/l and shall be monitored once per week by grab sample.

FINAL EFFLUENT LIMITATIONS AND MONITORING REQUIREMENTS Outfall Number 001

1. During the period beginning upon the completion of the expansion of the 1.5 million gallon per day (MGD) treatment facilities and lasting through the date of expiration, the permittee is authorized to discharge subject to the following effluent limitations: The annual average flow of effluent shall not exceed 1.5 MGD; nor shall the average discharge during any two-hour period (2-hour peak) exceed 4,861 gallons per minute (gpm).

Effluent Characteristic	Discharge Limitations				Minimum Self-Monitoring Requirements	
	Daily Avg mg/l(lbs/day)	7-day Avg mg/l	Daily Max mg/l	Single Grab mg/l	Report Daily Avg. & Daily Max. Measurement Frequency	Sample Type
Flow, MGD	Report	N/A	Report	N/A	Continuous	Totalizing meter
Carbonaceous Biochemical Oxygen Demand (5-day)	10 (125)	15	25	35	Two/week	Composite
Total Suspended Solids	15 (188)	25	40	60	Two/week	Composite
Ammonia Nitrogen	2 (25)	5	10	15	Two/week	Composite

2. The effluent shall contain a chlorine residual of at least 1.0 mg/l after a detention time of at least 20 minutes (based on peak flow) and shall be monitored daily by grab sample. The permittee shall dechlorinate the chlorinated effluent to less than 0.1 mg/l chlorine residual and shall monitor chlorine residual daily by grab sample after the dechlorination process. An equivalent method of disinfection may be substituted only with prior approval of the Executive Director.

3. The pH shall not be less than 6.0 standard units nor greater than 9.0 standard units and shall be monitored once per week by grab sample.

4. There shall be no discharge of floating solids or visible foam in other than trace amounts and no discharge of visible oil.

5. Effluent monitoring samples shall be taken at the following location(s): $CBOD_5$, TSS, NH_3-N, and Cl_2 residual shall be taken after obtaining a 20-minute detention time in the chlorination basin and prior to dechlorination. Dissolved oxygen, Cl_2 residual, and pH shall be taken after the final treatment unit.

6. The effluent shall contain a minimum dissolved oxygen of 6.0 mg/l and shall be monitored twice per week by grab sample.

7. The annual average flow and maximum 2-hour peak flow shall be reported monthly.

DEFINITIONS AND STANDARD PERMIT CONDITIONS

As required by Title 30 Texas Administrative Code (TAC) Chapter 305, certain regulations appear as standard conditions in waste discharge permits. 30 TAC §§ 305.121 - 305.129 (relating to Permit Characteristics and Conditions) as promulgated under the Texas Water Code §§ 5.103 and 5.105, and the Texas Health and Safety Code §§ 361.017 and 361.024(a), establish the characteristics and standards for waste discharge permits, including sewage sludge, and those sections of 40 Code of Federal Regulations (CFR) Part 122 adopted by reference by the Commission. The following text includes these conditions and incorporates them into this permit. All definitions in Section 26.001 of the Texas Water Code and 30 TAC Chapter 305 shall apply to this permit and are incorporated by reference. Some specific definitions of words or phrases used in this permit are as follows:

1. Flow Measurements

   a. Annual average flow - the arithmetic average of all daily flow determinations taken within the preceding 12 consecutive calendar months. The annual average flow determination shall consist of daily flow volume determinations made by a totalizing meter, charted on a chart recorder and limited to major domestic wastewater discharge facilities with a 1 million gallons per day or greater permitted flow.

   b. Daily average flow - the arithmetic average of all determinations of the daily flow within a period of one calendar month. The daily average flow determination shall consist of determinations made on at least four separate days. If instantaneous measurements are used to determine the daily flow, the determination shall be the arithmetic average of all instantaneous measurements taken during that month. Daily average flow determination for intermittent discharges shall consist of a minimum of three flow determinations on days of discharge.

   c. Daily maximum flow - the highest total flow for any 24-hour period in a calendar month.

   d. Instantaneous flow - the measured flow during the minimum time required to interpret the flow measuring device.

   e. 2-hour peak flow (domestic wastewater treatment plants) - the maximum flow sustained for a two-hour period during the period of daily discharge. The average of multiple measurements of instantaneous maximum flow within a two-hour period may be used to calculate the 2-hour peak flow.

   f. Maximum 2-hour peak flow (domestic wastewater treatment plants) - the highest 2-hour peak flow for any 24-hour period in a calender month.

2. Concentration Measurements

   a. Daily average concentration - the arithmetic average of all effluent samples, composite or grab as required by this permit, within a period of one calendar month, consisting of at least four separate representative measurements.

      i. For domestic wastewater treatment plants - When four samples are not available in a calendar month, the arithmetic average (weighted by flow) of all values in the previous four consecutive month period consisting of at least four measurements shall be utilized as the daily average concentration.

      ii. For all other wastewater treatment plants - When four samples are not available in a calender month, the arithmetic average (weighted by flow) of all values taken during the month shall be utilized as the daily average concentration.

   b. 7-day average concentration - the arithmetic average of all effluent samples, composite or grab as required by this permit, within a period of one calendar week, Sunday through Saturday.

   c. Daily maximum concentration - the maximum concentration measured on a single day, by the sample type specified in the permit, within a period of one calender month.

   d. Daily discharge - the discharge of a pollutant measured during a calendar day or any 24-hour period that reasonably represents the calendar day for purposes of sampling. For pollutants with limitations expressed in terms of mass, the "daily discharge" is calculated as the total mass of the pollutant discharged over the sampling day. For pollutants with limitations expressed in other units of measurement, the "daily discharge" is calculated as the average measurement of the pollutant over the sampling day.

      The "daily discharge" determination of concentration made using a composite sample shall be the concentration of the composite sample. When grab samples are used, the "daily discharge" determination of concentration shall be the arithmetic average (weighted by flow value) of all samples collected during that day.

e. Fecal coliform bacteria concentration - the number of colonies of fecal coliform bacteria per 100 milliliters effluent. The daily average fecal coliform bacteria concentration is a geometric mean of the values for the effluent samples collected in a calendar month. The geometric mean shall be determined by calculating the nth root of the product of all measurements made in a calender month, where n equals the number of measurements made; or, computed as the antilogarithm of the arithmetic mean of the logarithms of all measurements made in a calender month. For any measurement of fecal coliform bacteria equaling zero, a substituted value of one shall be made for input into either computation method. The 7-day average for fecal coliform bacteria is the geometric mean of the values for all effluent samples collected during a calender week.

f. Daily average loading (lbs/day) - the arithmetic average of all daily discharge loading calculations during a period of one calender month. These calculations must be made for each day of the month that a parameter is analyzed. The daily discharge, in terms of mass (lbs/day), is calculated as (Flow, MGD x Concentration, mg/l x 8.34).

g. Daily maximum loading (lbs/day) - the highest daily discharge, in terms of mass (lbs/day), within a period of one calender month.

3. Sample Type

a. Composite sample - For domestic wastewater, a composite sample is a sample made up of a minimum of three effluent portions collected in a continuous 24-hour period or during the period of daily discharge if less than 24 hours, and combined in volumes proportional to flow, and collected at the intervals required by 30 TAC § 319.9 (a). For industrial wastewater, a composite sample is a sample made up of a minimum of three effluent portions collected in a continuous 24-hour period or during the period of daily discharge if less than 24 hours, and combined in volumes proportional to flow, and collected at the intervals required by 30 TAC § 319.9 (b).

b. Grab sample - an individual sample collected in less than 15 minutes.

4. Treatment Facility (facility) - wastewater facilities used in the conveyance, storage, treatment, recycling, reclamation and/or disposal of domestic sewage, industrial wastes, agricultural wastes, recreational wastes, or other wastes including sludge handling or disposal facilities under the jurisdiction of the Commission.

5. The term "sewage sludge" is defined as solid, semi-solid, or liquid residue generated during the treatment of domestic sewage in 30 TAC Chapter 312. This includes the solids which have not been classified as hazardous waste separated from wastewater by unit processes .

6. Bypass - the intentional diversion of a waste stream from any portion of a treatment facility.

MONITORING AND REPORTING REQUIREMENTS

1. Self-Reporting

Monitoring results shall be provided at the intervals specified in the permit. Unless otherwise specified in this permit or otherwise ordered by the Commission, the permittee shall conduct effluent sampling and reporting in accordance with 30 TAC §§ 319.4 - 319.12. Unless otherwise specified, a monthly effluent report shall be submitted each month, to the Enforcement Division (MC 224), by the 20th day of the following month for each discharge which is described by this permit whether or not a discharge is made for that month. Monitoring results must be reported on an approved self-report form, that is signed and certified as required by Monitoring and Reporting Requirements No. 10.

As provided by state law, the permittee is subject to administrative, civil and criminal penalties, as applicable, for negligently or knowingly violating the Clean Water Act, the Texas Water Code, Chapters 26, 27, and 28, and Texas Health and Safety Code, Chapter 361, including but not limited to knowingly making any false statement, representation, or certification on any report, record, or other document submitted or required to be maintained under this permit, including monitoring reports or reports of compliance or noncompliance, or falsifying, tampering with or knowingly rendering inaccurate any monitoring device or method required by this permit or violating any other requirement imposed by state or federal regulations.

2. Test Procedures

Unless otherwise specified in this permit, test procedures for the analysis of pollutants shall comply with procedures specified in 30 TAC §§319.11 - 319.12. Measurements, tests and calculations shall be accurately accomplished in a representative manner.

3. Records of Results

   a. Monitoring samples and measurements shall be taken at times and in a manner so as to be representative of the monitored activity.

   b. Except for records of monitoring information required by this permit related to the permittee's sewage sludge use and disposal activities, which shall be retained for a period of at least five years (or longer as required by 40 CFR Part 503), monitoring and reporting records, including strip charts and records of calibration and maintenance, copies of all records required by this permit, records of all data used to complete the application for this permit, and the certification required by 40 CFR § 264.73(b)(9) shall be retained at the facility site, or shall be readily available for review by a TCEQ representative for a period of three years from the date of the record or sample, measurement, report, application or certification. This period shall be extended at the request of the Executive Director.

   c. Records of monitoring activities shall include the following:

      i. date, time and place of sample or measurement;
      ii. identity of individual who collected the sample or made the measurement.
      iii. date and time of analysis;
      iv. identity of the individual and laboratory who performed the analysis;
      v. the technique or method of analysis; and
      vi. the results of the analysis or measurement and quality assurance/quality control records.

      The period during which records are required to be kept shall be automatically extended to the date of the final disposition of any administrative or judicial enforcement action that may be instituted against the permittee.

4. Additional Monitoring by Permittee

   If the permittee monitors any pollutant at the location(s) designated herein more frequently than required by this permit using approved analytical methods as specified above, all results of such monitoring shall be included in the calculation and reporting of the values submitted on the approved self-report form. Increased frequency of sampling shall be indicated on the self-report form.

5. Calibration of Instruments

   All automatic flow measuring or recording devices and all totalizing meters for measuring flows shall be accurately calibrated by a trained person at plant start-up and as often thereafter as necessary to ensure accuracy, but not less often than annually unless authorized by the Executive Director for a longer period. Such person shall verify in writing that the device is operating properly and giving accurate results. Copies of the verification shall be retained at the facility site and/or shall be readily available for review by a TCEQ representative for a period of three years.

6. Compliance Schedule Reports

   Reports of compliance or noncompliance with, or any progress reports on, interim and final requirements contained in any compliance schedule of the permit shall be submitted no later than 14 days following each schedule date to the Regional Office and the Enforcement Division (MC 224).

7. Noncompliance Notification

   a. In accordance with 30 TAC § 305.125(9) any noncompliance which may endanger human health or safety, or the environment shall be reported by the permittee to the TCEQ. Report of such information shall be provided orally or by facsimile transmission (FAX) to the Regional Office within 24 hours of becoming aware of the noncompliance. A written submission of such information shall also be provided by the permittee to the Regional Office and the Enforcement Division (MC 224) within five working days of becoming aware of the noncompliance. The written submission shall contain a description of the noncompliance and its cause; the potential danger to human health or safety, or the environment; the period of noncompliance, including exact dates and times; if the noncompliance has not been corrected, the time it is expected to continue; and steps taken or planned to reduce, eliminate, and prevent recurrence of the noncompliance, and to mitigate its adverse effects.

   b. The following violations shall be reported under Monitoring and Reporting Requirement 7.a.:

i. Unauthorized discharges as defined in Permit Condition 2(g).
ii. Any unanticipated bypass which exceeds any effluent limitation in the permit.
iii. Violation of a permitted maximum daily discharge limitation for pollutants listed specifically in the Other Requirements section of an Industrial TPDES permit.

c. In addition to the above, any effluent violation which deviates from the permitted effluent limitation by more than 40% shall be reported by the permittee in writing to the Regional Office and the Enforcement Division (MC 224) within 5 working days of becoming aware of the noncompliance.

d. Any noncompliance other than that specified in this section, or any required information not submitted or submitted incorrectly, shall be reported to the Enforcement Division (MC 224) as promptly as possible. For effluent limitation violations, noncompliances shall be reported on the approved self-report form.

8. In accordance with the procedures described in 30 TAC §§ 35.301 - 35.303 (relating to Water Quality Emergency and Temporary Orders) if the permittee knows in advance of the need for a bypass, it shall submit prior notice by applying for such authorization.

9. Changes in Discharges of Toxic Substances

All existing manufacturing, commercial, mining, and silvicultural permittees shall notify the Regional Office, orally or by facsimile transmission within 24 hours, and both the Regional Office and the Enforcement Division (MC 224) in writing within five (5) working days, after becoming aware of or having reason to believe:

a. That any activity has occurred or will occur which would result in the discharge, on a routine or frequent basis, of any toxic pollutant listed at 40 CFR Part 122, Appendix D, Tables II and III (excluding Total Phenols) which is not limited in the permit, if that discharge will exceed the highest of the following "notification levels":

i. One hundred micrograms per liter (100 μg/L);
ii. Two hundred micrograms per liter (200 μg/L) for acrolein and acrylonitrile; five hundred micrograms per liter (500 μg/L) for 2,4-dinitrophenol and for 2-methyl-4,6-dinitrophenol; and one milligram per liter (1 mg/L) for antimony;
iii. Five (5) times the maximum concentration value reported for that pollutant in the permit application; or
iv. The level established by the TCEQ.

b. That any activity has occurred or will occur which would result in any discharge, on a nonroutine or infrequent basis, of a toxic pollutant which is not limited in the permit, if that discharge will exceed the highest of the following "notification levels":

i. Five hundred micrograms per liter (500 μg/L);
ii. One milligram per liter (1 mg/L) for antimony;
iii. Ten (10) times the maximum concentration value reported for that pollutant in the permit application; or
iv. The level established by the TCEQ.

10. Signatories to Reports

All reports and other information requested by the Executive Director shall be signed by the person and in the manner required by 30 TAC § 305.128 (relating to Signatories to Reports).

11. All Publicly Owned Treatment Works (POTWs) must provide adequate notice to the Executive Director of the following:

a. Any new introduction of pollutants into the POTW from an indirect discharger which would be subject to section 301 or 306 of the CWA if it were directly discharging those pollutants;

b. Any substantial change in the volume or character of pollutants being introduced into that POTW by a source introducing pollutants into the POTW at the time of issuance of the permit; and

c. For the purpose of this paragraph, adequate notice shall include information on:

i. The quality and quantity of effluent introduced into the POTW; and
ii. Any anticipated impact of the change on the quantity or quality of effluent to be discharged from the POTW.

PERMIT CONDITIONS

1. General

   a. When the permittee becomes aware that it failed to submit any relevant facts in a permit application, or submitted incorrect information in an application or in any report to the Executive Director, it shall promptly submit such facts or information.

   b. This permit is granted on the basis of the information supplied and representations made by the permittee during action on an application, and relying upon the accuracy and completeness of that information and those representations. After notice and opportunity for a hearing, this permit may be modified, suspended, or revoked, in whole or in part, in accordance with 30 TAC Chapter 305, Subchapter D, during its term for good cause including, but not limited to, the following:

      i. Violation of any terms or conditions of this permit;
      ii. Obtaining this permit by misrepresentation or failure to disclose fully all relevant facts; or
      iii. A change in any condition that requires either a temporary or permanent reduction or elimination of the authorized discharge.

   c. The permittee shall furnish to the Executive Director, upon request and within a reasonable time, any information to determine whether cause exists for amending, revoking, suspending or terminating the permit. The permittee shall also furnish to the Executive Director, upon request, copies of records required to be kept by the permit.

2. Compliance

   a. Acceptance of the permit by the person to whom it is issued constitutes acknowledgment and agreement that such person will comply with all the terms and conditions embodied in the permit, and the rules and other orders of the Commission.

   b. The permittee has a duty to comply with all conditions of the permit. Failure to comply with any permit condition constitutes a violation of the permit and the Texas Water Code or the Texas Health and Safety Code, and is grounds for enforcement action, for permit amendment, revocation or suspension, or for denial of a permit renewal application or an application for a permit for another facility.

   c. It shall not be a defense for a permittee in an enforcement action that it would have been necessary to halt or reduce the permitted activity in order to maintain compliance with the conditions of the permit.

   d. The permittee shall take all reasonable steps to minimize or prevent any discharge or sludge use or disposal or other permit violation which has a reasonable likelihood of adversely affecting human health or the environment.

   e. Authorization from the Commission is required before beginning any change in the permitted facility or activity that may result in noncompliance with any permit requirements.

   f. A permit may be amended, suspended and reissued, or revoked for cause in accordance with 30 TAC §§ 305.62 and 305.66 and Texas Water Code Section 7.302. The filing of a request by the permittee for a permit amendment, suspension and reissuance, or termination, or a notification of planned changes or anticipated noncompliance, does not stay any permit condition.

   g. There shall be no unauthorized discharge of wastewater or any other waste. For the purpose of this permit, an unauthorized discharge is considered to be any discharge of wastewater into or adjacent to water in the state at any location not permitted as an outfall or otherwise defined in the Other Requirements section of this permit.

   h. In accordance with 30 TAC § 305.535(a), the permittee may allow any bypass to occur from a TPDES permitted facility which does not cause permitted effluent limitations to be exceeded or an unauthorized discharge to occur, but only if the bypass is also for essential maintenance to assure efficient operation.

   i. The permittee is subject to administrative, civil, and criminal penalties, as applicable, under Texas Water Code §§7.051 - 7.075 (relating to Administrative Penalties), 7.101 - 7.111 (relating to Civil Penalties), and 7.141 - 7.202 (relating to Criminal Offenses and Penalties) for violations including, but not limited to, negligently or knowingly violating the federal Clean Water Act, §§ 301, 302, 306, 307, 308, 318, or 405, or any condition or limitation implementing any sections in a permit issued under the CWA § 402, or any requirement imposed in a pretreatment program approved under the CWA §§ 402 (a)(3) or 402 (b)(8).

3. Inspections and Entry

   a. Inspection and entry shall be allowed as prescribed in the Texas Water Code Chapters 26, 27, and 28, and Texas Health and Safety Code Chapter 361.

   b. The members of the Commission and employees and agents of the Commission are entitled to enter any public or private property at any reasonable time for the purpose of inspecting and investigating conditions relating to the quality of water in the state or the compliance with any rule, regulation, permit or other order of the Commission. Members, employees, or agents of the Commission and Commission contractors are entitled to enter public or private property at any reasonable time to investigate or monitor or, if the responsible party is not responsive or there is an immediate danger to public health or the environment, to remove or remediate a condition related to the quality of water in the state. Members, employees, Commission contractors, or agents acting under this authority who enter private property shall observe the establishment's rules and regulations concerning safety, internal security, and fire protection, and if the property has management in residence, shall notify management or the person then in charge of his presence and shall exhibit proper credentials. If any member, employee, Commission contractor, or agent is refused the right to enter in or on public or private property under this authority, the Executive Director may invoke the remedies authorized in Texas Water Code Section 7.002. The statement above, that Commission entry shall occur in accordance with an establishment's rules and regulations concerning safety, internal security, and fire protection, is not grounds for denial or restriction of entry to any part of the facility, but merely describes the Commission's duty to observe appropriate rules and regulations during an inspection.

4. Permit Amendment and/or Renewal

   a. The permittee shall give notice to the Executive Director as soon as possible of any planned physical alterations or additions to the permitted facility if such alterations or additions would require a permit amendment or result in a violation of permit requirements. Notice shall also be required under this paragraph when:

      i. The alteration or addition to a permitted facility may meet one of the criteria for determining whether a facility is a new source in accordance with 30 TAC § 305.534 (relating to New Sources and New Dischargers); or

      ii. The alteration or addition could significantly change the nature or increase the quantity of pollutants discharged. This notification applies to pollutants which are subject neither to effluent limitations in the permit, nor to notification requirements in Monitoring and Reporting Requirements No. 9;

      iii. The alteration or addition results in a significant change in the permittee's sludge use or disposal practices, and such alteration, addition, or change may justify the application of permit conditions that are different from or absent in the existing permit, including notification of additional use or disposal sites not reported during the permit application process or not reported pursuant to an approved land application plan.

   b. Prior to any facility modifications, additions, or expansions that will increase the plant capacity beyond the permitted flow, the permittee must apply for and obtain proper authorization from the Commission before commencing construction.

   c. The permittee must apply for an amendment or renewal at least 180 days prior to expiration of the existing permit in order to continue a permitted activity after the expiration date of the permit. If an application is submitted prior to the expiration date of the permit, the existing permit shall remain in effect until the application is approved, denied, or returned. If the application is returned or denied, authorization to continue such activity shall terminate upon the effective date of the action. If an application is not submitted prior to the expiration date of the permit, the permit shall expire and authorization to continue such activity shall terminate.

   d. Prior to accepting or generating wastes which are not described in the permit application or which would result in a significant change in the quantity or quality of the existing discharge, the permittee must report the proposed changes to the Commission. The permittee must apply for a permit amendment reflecting any necessary changes in permit conditions, including effluent limitations for pollutants not identified and limited by this permit.

   e. In accordance with the Texas Water Code § 26.029(b), after a public hearing, notice of which shall be given to the permittee, the Commission may require the permittee, from time to time, for good cause, in accordance with applicable laws, to conform to new or additional conditions.

   f. If any toxic effluent standard or prohibition (including any schedule of compliance specified in such effluent standard or prohibition) is promulgated under Section 307(a) of the Clean Water Act for a toxic pollutant which is present in the discharge and that standard or prohibition is more stringent than any limitation on the pollutant in this permit, this permit

shall be modified or revoked and reissued to conform to the toxic effluent standard or prohibition. The permittee shall comply with effluent standards or prohibitions established under Section 307(a) of the Clean Water Act for toxic pollutants within the time provided in the regulations that established those standards or prohibitions, even if the permit has not yet been modified to incorporate the requirement.

5. Permit Transfer

   a. Prior to any transfer of this permit, Commission approval must be obtained. The Commission shall be notified in writing of any change in control or ownership of facilities authorized by this permit. Such notification should be sent to the Applications Review and Processing Team (MC 148) of the Water Quality Division.

   b. A permit may be transferred only according to the provisions of 30 TAC § 305.64 (relating to Transfer of Permits) and 30 TAC § 50.133 (relating to Executive Director Action on Application or WQMP update).

6. Relationship to Hazardous Waste Activities

   This permit does not authorize any activity of hazardous waste storage, processing, or disposal which requires a permit or other authorization pursuant to the Texas Health and Safety Code.

7. Relationship to Water Rights

   Disposal of treated effluent by any means other than discharge directly to water in the state must be specifically authorized in this permit and may require a permit pursuant to Chapter 11 of the Texas Water Code.

8. Property Rights

   A permit does not convey any property rights of any sort, or any exclusive privilege.

9. Permit Enforceability

   The conditions of this permit are severable, and if any provision of this permit, or the application of any provision of this permit to any circumstances, is held invalid, the application of such provision to other circumstances, and the remainder of this permit, shall not be affected thereby.

10. Relationship to Permit Application

    The application pursuant to which the permit has been issued is incorporated herein; provided, however, that in the event of a conflict between the provisions of this permit and the application, the provisions of the permit shall control.

11. Notice of Bankruptcy.

    a. Each permittee shall notify the executive director, in writing, immediately following the filing of a voluntary or involuntary petition for bankruptcy under any chapter of Title 11 (Bankruptcy) of the United States Code (11 USC) by or against:
       i. the permittee;
       ii. an entity (as that term is defined in 11 USC, §101(14)) controlling the permittee or listing the permit or permittee as property of the estate; or
       iii. an affiliate (as that term is defined in 11 USC, §101(2)) of the permittee.

    b. This notification must indicate:
       i. the name of the permittee and the permit number(s);
       ii. the bankruptcy court in which the petition for bankruptcy was filed; and
       iii. the date of filing of the petition.

OPERATIONAL REQUIREMENTS

1. The permittee shall at all times ensure that the facility and all of its systems of collection, treatment, and disposal are properly operated and maintained. This includes, but is not limited to, the regular, periodic examination of wastewater solids within the treatment plant by the operator in order to maintain an appropriate quantity and quality of solids inventory as described in the various operator training manuals and according to accepted industry standards for process control. Process control, maintenance, and operations records shall be retained at the facility site, or shall be readily available for review by a TCEQ representative, for a period of three years.

2. Upon request by the Executive Director, the permittee shall take appropriate samples and provide proper analysis in order to demonstrate compliance with Commission rules. Unless otherwise specified in this permit or otherwise ordered by the Commission, the permittee shall comply with all applicable provisions of 30 TAC Chapter 312 concerning sewage sludge use and disposal and 30 TAC §§ 319.21 - 319.29 concerning the discharge of certain hazardous metals.

3. Domestic wastewater treatment facilities shall comply with the following provisions:

   a. The permittee shall notify the Municipal Permits Team, Wastewater Permitting Section (MC 148) of the Water Quality Division, in writing, of any facility expansion at least 90 days prior to conducting such activity.

   b. The permittee shall submit a closure plan for review and approval to the Land Application Team, Wastewater Permitting Section (MC 148) of the Water Quality Division, for any closure activity at least 90 days prior to conducting such activity. Closure is the act of permanently taking a waste management unit or treatment facility out of service and includes the permanent removal from service of any pit, tank, pond, lagoon, surface impoundment and/or other treatment unit regulated by this permit.

4. The permittee is responsible for installing prior to plant start-up, and subsequently maintaining, adequate safeguards to prevent the discharge of untreated or inadequately treated wastes during electrical power failures by means of alternate power sources, standby generators, and/or retention of inadequately treated wastewater.

5. Unless otherwise specified, the permittee shall provide a readily accessible sampling point and, where applicable, an effluent flow measuring device or other acceptable means by which effluent flow may be determined.

6. The permittee shall remit an annual water quality fee to the Commission as required by 30 TAC Chapter 21. Failure to pay the fee may result in revocation of this permit under Texas Water Code § 7.302(b)(6).

7. Documentation

   For all written notifications to the Commission required of the permittee by this permit, the permittee shall keep and make available a copy of each such notification under the same conditions as self-monitoring data are required to be kept and made available. Except for information required for TPDES permit applications, effluent data, including effluent data in permits, draft permits and permit applications, and other information specified as not confidential in 30 TAC § 1.5(d), any information submitted pursuant to this permit may be claimed as confidential by the submitter. Any such claim must be asserted in the manner prescribed in the application form or by stamping the words "confidential business information" on each page containing such information. If no claim is made at the time of submission, information may be made available to the public without further notice. If the Commission or Executive Director agrees with the designation of confidentiality, the TCEQ will not provide the information for public inspection unless required by the Texas Attorney General or a court pursuant to an open records request. If the Executive Director does not agree with the designation of confidentiality, the person submitting the information will be notified.

8. Facilities which generate domestic wastewater shall comply with the following provisions; domestic wastewater treatment facilities at permitted industrial sites are excluded.

   a. Whenever flow measurements for any domestic sewage treatment facility reach 75 percent of the permitted daily average or annual average flow for three consecutive months, the permittee must initiate engineering and financial planning for expansion and/or upgrading of the domestic wastewater treatment and/or collection facilities. Whenever the flow reaches 90 percent of the permitted daily average or annual average flow for three consecutive months, the permittee shall obtain necessary authorization from the Commission to commence construction of the necessary additional treatment and/or collection facilities. In the case of a domestic wastewater treatment facility which reaches 75 percent of the permitted daily average or annual average flow for three consecutive months, and the planned population to be served or the quantity of waste produced is not expected to exceed the design limitations of the treatment facility, the permittee shall submit an engineering report supporting this claim to the Executive Director of the Commission.

      If in the judgement of the Executive Director the population to be served will not cause permit noncompliance, then the requirement of this section may be waived. To be effective, any waiver must be in writing and signed by the Director of the Enforcement Division (MC 149) of the Commission, and such waiver of these requirements will be reviewed upon expiration of the existing permit; however, any such waiver shall not be interpreted as condoning or excusing any violation of any permit parameter.

   b. The plans and specifications for domestic sewage collection and treatment works associated with any domestic permit must be approved by the Commission, and failure to secure approval before commencing construction of such works or making a discharge is a violation of this permit and each day is an additional violation until approval has been secured.

c. Permits for domestic wastewater treatment plants are granted subject to the policy of the Commission to encourage the development of area-wide waste collection, treatment and disposal systems. The Commission reserves the right to amend any domestic wastewater permit in accordance with applicable procedural requirements to require the system covered by this permit to be integrated into an area-wide system, should such be developed; to require the delivery of the wastes authorized to be collected in, treated by or discharged from said system, to such area-wide system; or to amend this permit in any other particular to effectuate the Commission's policy. Such amendments may be made when the changes required are advisable for water quality control purposes and are feasible on the basis of waste treatment technology, engineering, financial, and related considerations existing at the time the changes are required, exclusive of the loss of investment in or revenues from any then existing or proposed waste collection, treatment or disposal system.

9. Domestic wastewater treatment plants shall be operated and maintained by sewage plant operators holding a valid certificate of competency at the required level as defined in 30 TAC Chapter 30.

10. For Publicly Owned Treatment Works (POTWs), the 30-day average (or monthly average) percent removal for BOD and TSS shall not be less than 85 percent, unless otherwise authorized by this permit.

11. Facilities which generate industrial solid waste as defined in 30 TAC § 335.1 shall comply with these provisions:

    a. Any solid waste, as defined in 30 TAC § 335.1 (including but not limited to such wastes as garbage, refuse, sludge from a waste treatment, water supply treatment plant or air pollution control facility, discarded materials, discarded materials to be recycled, whether the waste is solid, liquid, or semisolid), generated by the permittee during the management and treatment of wastewater, must be managed in accordance with all applicable provisions of 30 TAC Chapter 335, relating to Industrial Solid Waste Management.

    b. Industrial wastewater that is being collected, accumulated, stored, or processed before discharge through any final discharge outfall, specified by this permit, is considered to be industrial solid waste until the wastewater passes through the actual point source discharge and must be managed in accordance with all applicable provisions of 30 TAC Chapter 335.

    c. The permittee shall provide written notification, pursuant to the requirements of 30 TAC § 335.8(b)(1), to the Environmental Cleanup Section (MC 127) of the Remediation Division informing the Commission of any closure activity involving an Industrial Solid Waste Management Unit, at least 90 days prior to conducting such an activity.

    d. Construction of any industrial solid waste management unit requires the prior written notification of the proposed activity to the Registration and Reporting Section (MC 129) of the Registration, Review, and Reporting Division. No person shall dispose of industrial solid waste, including sludge or other solids from wastewater treatment processes, prior to fulfilling the deed recordation requirements of 30 TAC § 335.5.

    e. The term "industrial solid waste management unit" means a landfill, surface impoundment, waste-pile, industrial furnace, incinerator, cement kiln, injection well, container, drum, salt dome waste containment cavern, or any other structure vessel, appurtenance, or other improvement on land used to manage industrial solid waste.

    f. The permittee shall keep management records for all sludge (or other waste) removed from any wastewater treatment process. These records shall fulfill all applicable requirements of 30 TAC Chapter 335 and must include the following, as it pertains to wastewater treatment and discharge:

        i. Volume of waste and date(s) generated from treatment process;
        ii. Volume of waste disposed of on-site or shipped off-site;
        iii. Date(s) of disposal;
        iv. Identity of hauler or transporter;
        v. Location of disposal site; and
        vi. Method of final disposal.

        The above records shall be maintained on a monthly basis. The records shall be retained at the facility site, or shall be readily available for review by authorized representatives of the TCEQ for at least five years.

12. For industrial facilities to which the requirements of 30 TAC Chapter 335 do not apply, sludge and solid wastes, including tank cleaning and contaminated solids for disposal, shall be disposed of in accordance with Chapter 361 of the Texas Health and Safety Code.

SLUDGE PROVISIONS

The permittee is authorized to dispose of sludge only at a Texas Commission on Environmental Quality (TCEQ) authorized land application site or co-disposal landfill. **The disposal of sludge by land application on property owned, leased or under the direct control of the permittee is a violation of the permit unless the site is authorized with the TCEQ. This provision does not authorize Distribution and Marketing of sludge. This provision does not authorize land application of Class A Sludge. This provision does not authorize the permittee to land apply sludge on property owned, leased or under the direct control of the permittee.**

SECTION I. REQUIREMENTS APPLYING TO ALL SEWAGE SLUDGE LAND APPLICATION

A. General Requirements

1. The permittee shall handle and dispose of sewage sludge in accordance with 30 TAC Chapter 312 and all other applicable state and federal regulations in a manner which protects public health and the environment from any reasonably anticipated adverse effects due to any toxic pollutants which may be present in the sludge.

2. In all cases, if the person (permit holder) who prepares the sewage sludge supplies the sewage sludge to another person for land application use or to the owner or lease holder of the land, the permit holder shall provide necessary information to the parties who receive the sludge to assure compliance with these regulations.

3. The permittee shall give 180 days prior notice to the Executive Director in care of the Wastewater Permitting Section (MC 148) of the Water Quality Division of any change planned in the sewage sludge disposal practice.

B. Testing Requirements

1. Sewage sludge shall be tested annually in accordance with the method specified in both 40 CFR Part 261, Appendix II and 40 CFR Part 268, Appendix I [Toxicity Characteristic Leaching Procedure (TCLP)] or other method, which receives the prior approval of the TCEQ for the contaminants listed in Table 1 of 40 CFR Section 261.24. Sewage sludge failing this test shall be managed according to RCRA standards for generators of hazardous waste, and the waste's disposition must be in accordance with all applicable requirements for hazardous waste processing, storage, or disposal. Following failure of any TCLP test, the management or disposal of sewage sludge at a facility other than an authorized hazardous waste processing, storage, or disposal facility shall be prohibited until such time as the permittee can demonstrate the sewage sludge no longer exhibits the hazardous waste toxicity characteristics (as demonstrated by the results of the TCLP tests). A written report shall be provided to both the TCEQ Registration and Reporting Section (MC 129) of the Registration, Review, and Reporting Division and the Regional Director (MC Region 12) within 7 days after failing the TCLP Test.

   The report shall contain test results, certification that unauthorized waste management has stopped and a summary of alternative disposal plans that comply with RCRA standards for the management of hazardous waste. The report shall be addressed to: Director, Registration, Review, and Reporting Division (MC 129), Texas Commission on Environmental Quality, P. O. Box 13087, Austin, Texas 78711-3087. In addition, the permittee shall prepare an annual report on the results of all sludge toxicity testing. This annual report shall be submitted to the TCEQ Regional Office (MC Region 12) and the Water Quality Compliance Monitoring Team (MC 224) of the Enforcement Division by September 1 of each year.

2. Sewage sludge shall not be applied to the land if the concentration of the pollutants exceed the pollutant concentration criteria in Table 1. The frequency of testing for pollutants in Table 1 is found in Section I.C.

TABLE 1

Pollutant	Ceiling Concentration (milligrams per kilogram)*
Arsenic	75
Cadmium	85
Chromium	3000
Copper	4300
Lead	840
Mercury	57
Molybdenum	75
Nickel	420
PCBs	49
Selenium	100
Zinc	7500

* Dry weight basis

3. Pathogen Control

All sewage sludge that is applied to agricultural land, forest, a public contact site, or a reclamation site shall be treated by one of the following methods to ensure that the sludge meets either the Class A or Class B pathogen requirements.

a. Six alternatives are available to demonstrate compliance with Class A sewage sludge. The first 4 options require either the density of fecal coliform in the sewage sludge be less than 1000 Most Probable Number (MPN) per gram of total solids (dry weight basis), or the density of Salmonella sp. bacteria in the sewage sludge be less than three MPN per four grams of total solids (dry weight basis) at the time the sewage sludge is used or disposed. Below are the additional requirements necessary to meet the definition of a Class A sludge.

Alternative 1 - The temperature of the sewage sludge that is used or disposed shall be maintained at or above a specific value for a period of time. See 30 TAC Section 312.82(a)(2)(A) for specific information.

Alternative 2 - The pH of the sewage sludge that is used or disposed shall be raised to above 12 std. units and shall remain above 12 std. units for 72 hours.

The temperature of the sewage sludge shall be above 52 degrees Celsius for 12 hours or longer during the period that the pH of the sewage sludge is above 12 std. units.

At the end of the 72-hour period during which the pH of the sewage sludge is above 12 std. units, the sewage sludge shall be air dried to achieve a percent solids in the sewage sludge greater than 50 percent.

Alternative 3 - The sewage sludge shall be analyzed for enteric viruses prior to pathogen treatment. The limit for enteric viruses is less than one Plaque-forming Unit per four grams of total solids (dry weight basis) either before or following pathogen treatment. See 30 TAC Section 312.82(a)(2)(C)(i-iii) for specific information. The sewage sludge shall be analyzed for viable helminth ova prior to pathogen treatment. The limit for viable helminth ova is less than one per four grams of total solids (dry weight basis) either before or following pathogen treatment. See 30 TAC Section 312.82(a)(2)(C)(iv-vi) for specific information.

Alternative 4 - The density of enteric viruses in the sewage sludge shall be less than one Plaque-forming Unit per four grams of total solids (dry weight basis) at the time the sewage sludge is used or disposed. The density of viable helminth ova in the sewage sludge shall be less than one per four grams of total solids (dry weight basis) at the time the sewage sludge is used or disposed.

Alternative 5 (PFRP) - Sewage sludge that is used or disposed of shall be treated in one of the processes to Further Reduce Pathogens (PFRP) described in 40 CFR Part 503, Appendix B. PFRP include composting, heat drying, heat treatment, and thermophilic aerobic digestion.

Alternative 6 (PFRP Equivalent) - Sewage sludge that is used or disposed of shall be treated in a process that has been approved by the U. S. Environmental Protection Agency as being equivalent to those in Alternative 5.

b. Three alternatives are available to demonstrate compliance with Class B criteria for sewage sludge.

Alternative 1 -

i. A minimum of seven random samples of the sewage sludge shall be collected within 48 hours of the time the sewage sludge is used or disposed of during each monitoring episode for the sewage sludge.

ii. The geometric mean of the density of fecal coliform in the samples collected shall be less than either 2,000,000 MPN per gram of total solids (dry weight basis) or 2,000,000 Colony Forming Units per gram of total solids (dry weight basis).

Alternative 2 - Sewage sludge that is used or disposed of shall be treated in one of the Processes to Significantly Reduce Pathogens (PSRP) described in 40 CFR Part 503, Appendix B, so long as all of the following requirements are met by the generator of the sewage sludge.

i. Prior to use or disposal, all the sewage sludge must have been generated from a single location, except as provided in paragraph v. below;

ii. An independent Texas Licensed Professional Engineer must make a certification to the generator of a sewage sludge that the wastewater treatment facility generating the sewage sludge is designed to achieve one of the PSRP at the permitted design loading of the facility. The certification need only be repeated if the design loading of the facility is increased. The certification shall include a statement indicating the design meets all the applicable standards specified in Appendix B of 40 CFR Part 503;

iii. Prior to any off-site transportation or on-site use or disposal of any sewage sludge generated at a wastewater treatment facility, the chief certified operator of the wastewater treatment facility or other responsible official who manages the processes to significantly reduce pathogens at the wastewater treatment facility for the permittee, shall certify that the sewage sludge underwent at least the minimum operational requirements necessary in order to meet one of the PSRP. The acceptable processes and the minimum operational and record keeping requirements shall be in accordance with established U. S. Environmental Protection Agency final guidance;

iv. All certification records and operational records describing how the requirements of this paragraph were met shall be kept by the generator for a minimum of three years and be available for inspection by commission staff for review; and

v. If the sewage sludge is generated from a mixture of sources, resulting from a person who prepares sewage sludge from more than one wastewater treatment facility, the resulting derived product shall meet one of the PSRP, and shall meet the certification, operation, and record keeping requirements of this paragraph.

Alternative 3 - Sewage sludge shall be treated in an equivalent process that has been approved by the U. S. Environmental Protection Agency, so long as all of the following requirements are met by the generator of the sewage sludge.

i. Prior to use or disposal, all the sewage sludge must have been generated from a single location, except as provided in paragraph v. below;

ii. Prior to any off-site transportation or on-site use or disposal of any sewage sludge generated at a wastewater treatment facility, the chief certified operator of the wastewater treatment facility or other responsible official who manages the processes to significantly reduce pathogens at the wastewater treatment facility for the permittee, shall certify that the sewage sludge underwent at least the minimum operational requirements necessary in order to meet one of the PSRP. The acceptable processes and the minimum operational and record keeping requirements shall be in accordance with established U. S. Environmental Protection Agency final guidance;

iii. All certification records and operational records describing how the requirements of this paragraph were met shall be kept by the generator for a minimum of three years and be available for inspection by commission staff for review;

iv. The executive director will accept from the U. S. Environmental Protection Agency a finding of equivalency to the defined PSRP; and

v. If the sewage sludge is generated from a mixture of sources resulting from a person who prepares sewage sludge from more than one wastewater treatment facility, the resulting derived product shall meet one of the Processes to Significantly Reduce Pathogens, and shall meet the certification, operation, and record keeping requirements of this paragraph.

In addition, the following site restrictions must be met if Class B sludge is land applied:

i. Food crops with harvested parts that touch the sewage sludge/soil mixture and are totally above the land surface shall not be harvested for 14 months after application of sewage sludge.

ii. Food crops with harvested parts below the surface of the land shall not be harvested for 20 months after application of sewage sludge when the sewage sludge remains on the land surface for 4 months or longer prior to incorporation into the soil.

iii. Food crops with harvested parts below the surface of the land shall not be harvested for 38 months after application of sewage sludge when the sewage sludge remains on the land surface for less than 4 months prior to incorporation into the soil.

iv. Food crops, feed crops, and fiber crops shall not be harvested for 30 days after application of sewage sludge.

v. Animals shall not be allowed to graze on the land for 30 days after application of sewage sludge.

vi. Turf grown on land where sewage sludge is applied shall not be harvested for 1 year after application of the sewage sludge when the harvested turf is placed on either land with a high potential for public exposure or a lawn.

vii. Public access to land with a high potential for public exposure shall be restricted for 1 year after application of sewage sludge.

viii. Public access to land with a low potential for public exposure shall be restricted for 30 days after application of sewage sludge.

ix. Land application of sludge shall be in accordance with the buffer zone requirements found in 30 TAC Section 312.44.

4. Vector Attraction Reduction Requirements

All bulk sewage sludge that is applied to agricultural land, forest, a public contact site, or a reclamation site shall be treated by one of the following alternatives 1 through 10 for Vector Attraction Reduction.

Alternative 1 - The mass of volatile solids in the sewage sludge shall be reduced by a minimum of 38 percent.

Alternative 2 - If Alternative 1 cannot be met for an anaerobically digested sludge, demonstration can be made by digesting a portion of the previously digested sludge anaerobically in the laboratory in a bench-scale unit for 40 additional days at a temperature between 30 and 37 degrees Celsius. Volatile solids must be reduced by less than 17 percent to demonstrate compliance.

Alternative 3 - If Alternative 1 cannot be met for an aerobically digested sludge, demonstration can be made by digesting a portion of the previously digested sludge with a percent solids of two percent or less aerobically in the laboratory in a bench-scale unit for 30 additional days at 20 degrees Celsius. Volatile solids must be reduced by less than 15 percent to demonstrate compliance.

Alternative 4 - The specific oxygen uptake rate (SOUR) for sewage sludge treated in an aerobic process shall be equal to or less than 1.5 milligrams of oxygen per hour per gram of total solids (dry weight basis) at a temperature of 20 degrees Celsius.

Alternative 5 - Sewage sludge shall be treated in an aerobic process for 14 days or longer. During that time, the temperature of the sewage sludge shall be higher than 40 degrees Celsius and the average temperature of the sewage sludge shall be higher than 45 degrees Celsius.

Alternative 6 - The pH of sewage sludge shall be raised to 12 or higher by alkali addition and, without the addition of more alkali shall remain at 12 or higher for two hours and then remain at a pH of 11.5 or higher for an additional 22 hours at the time the sewage sludge is prepared for sale or given away in a bag or other container.

Alternative 7 - The percent solids of sewage sludge that does not contain unstabilized solids generated in a primary wastewater treatment process shall be equal to or greater than 75 percent based on the moisture content and total solids prior to mixing with other materials. Unstabilized solids are defined as organic materials in sewage sludge that have not been treated in either an aerobic or anaerobic treatment process.

Alternative 8 - The percent solids of sewage sludge that contains unstabilized solids generated in a primary wastewater treatment process shall be equal to or greater than 90 percent based on the moisture content and total solids prior to mixing with other materials at the time the sludge is used. Unstabilized solids are defined as organic materials in sewage sludge that have not been treated in either an aerobic or anaerobic treatment process.

Alternative 9 -

i. Sewage sludge shall be injected below the surface of the land.

ii. No significant amount of the sewage sludge shall be present on the land surface within one hour after the sewage sludge is injected.

iii. When sewage sludge that is injected below the surface of the land is Class A with respect to pathogens, the sewage sludge shall be injected below the land surface within eight hours after being discharged from the pathogen treatment process.

Alternative 10-

i. Sewage sludge applied to the land surface or placed on a surface disposal site shall be incorporated into the soil within six hours after application to or placement on the land.

ii. When sewage sludge that is incorporated into the soil is Class A with respect to pathogens, the sewage sludge shall be applied to or placed on the land within eight hours after being discharged from the pathogen treatment process.

C. Monitoring Requirements

Toxicity Characteristic Leaching Procedure (TCLP) Test - annually

PCBs - annually

All metal constituents and Fecal coliform or Salmonella sp. bacteria shall be monitored at the appropriate frequency shown below, pursuant to 30 TAC Section 312.46(a)(1):

Amount of sewage sludge (*) metric tons per 365-day period			Monitoring Frequency
0	to less than	290	Once/Year
290	to less than	1,500	Once/Quarter
1,500	to less than	15,000	Once/Two Months
15,000	or greater		Once/Month

(*) The amount of bulk sewage sludge applied to the land (dry weight basis).

Representative samples of sewage sludge shall be collected and analyzed in accordance with the methods referenced in 30 TAC Section 312.7.

SECTION II. REQUIREMENTS SPECIFIC TO BULK SEWAGE SLUDGE FOR APPLICATION TO THE LAND MEETING CLASS A or B PATHOGEN REDUCTION AND THE CUMULATIVE LOADING RATES IN TABLE 2, OR CLASS B PATHOGEN REDUCTION AND THE POLLUTANT CONCENTRATIONS IN TABLE 3

For those permittees meeting Class A or B pathogen reduction requirements and that meet the cumulative loading rates in Table 2 below, or the Class B pathogen reduction requirements and contain concentrations of pollutants below listed in Table 3, the following conditions apply:

A. Pollutant Limits

Table 2

Pollutant	Cumulative Pollutant Loading Rate (pounds per acre)
Arsenic	36
Cadmium	35
Chromium	2677
Copper	1339
Lead	268
Mercury	15
Molybdenum	Report Only
Nickel	375
Selenium	89
Zinc	2500

Table 3

Pollutant	Monthly Average Concentration (milligrams per kilogram)*
Arsenic	41
Cadmium	39
Chromium	1200
Copper	1500
Lead	300
Mercury	17
Molybdenum	Report Only
Nickel	420
Selenium	36
Zinc	2800

* Dry weight basis

B. Pathogen Control

All bulk sewage sludge that is applied to agricultural land, forest, a public contact site, a reclamation site, shall be treated by either Class A or Class B pathogen reduction requirements as defined above in Section I.B.3.

C. Management Practices

1. Bulk sewage sludge shall not be applied to agricultural land, forest, a public contact site, or a reclamation site that is flooded, frozen, or snow-covered so that the bulk sewage sludge enters a wetland or other waters in the State.

2. Bulk sewage sludge not meeting Class A requirements shall be land applied in a manner which complies with the Management Requirements in accordance with 30 TAC Section 312.44.

3. Bulk sewage sludge shall be applied at or below the agronomic rate of the cover crop.

4. An information sheet shall be provided to the person who receives bulk sewage sludge sold or given away. The information sheet shall contain the following information:

   a. The name and address of the person who prepared the sewage sludge that is sold or given away in a bag or other container for application to the land.

   b. A statement that application of the sewage sludge to the land is prohibited except in accordance with the instruction on the label or information sheet.

   c. The annual whole sludge application rate for the sewage sludge application rate for the sewage sludge that does not cause any of the cumulative pollutant loading rates in Table 2 above to be exceeded, unless the pollutant concentrations in Table 3 found in Section II above are met.

D. Notification Requirements

1. If bulk sewage sludge is applied to land in a State other than Texas, written notice shall be provided prior to the initial land application to the permitting authority for the State in which the bulk sewage sludge is proposed to be applied. The notice shall include:

   a. The location, by street address, and specific latitude and longitude, of each land application site.

   b. The approximate time period bulk sewage sludge will be applied to the site.

   c. The name, address, telephone number, and National Pollutant Discharge Elimination System permit number (if appropriate) for the person who will apply the bulk sewage sludge.

2. The permittee shall give 180 days prior notice to the Executive Director in care of the Wastewater Permitting Section (MC 148) of the Water Quality Division of any change planned in the sewage sludge disposal practice.

E. Record keeping Requirements

The sludge documents will be retained at the facility site and/or shall be readily available for review by a TCEQ representative. The person who prepares bulk sewage sludge or a sewage sludge material shall develop the following information and shall retain the information at the facility site and/or shall be readily available for review by a TCEQ representative for a period of <u>five years</u>. If the permittee supplies the sludge to another person who land applies the sludge, the permittee shall notify the land applier of the requirements for record keeping found in 30 TAC Section 312.47 for persons who land apply.

1. The concentration (mg/kg) in the sludge of each pollutant listed in Table 3 above and the applicable pollutant concentration criteria (mg/kg), <u>or</u> the applicable cumulative pollutant loading rate and the applicable cumulative pollutant loading rate limit (lbs/ac) listed in Table 2 above.

2. A description of how the pathogen reduction requirements are met (including site restrictions for Class B sludges, if applicable).

3. A description of how the vector attraction reduction requirements are met.

4. A description of how the management practices listed above in Section II.C are being met.

5. The following certification statement:

   "I certify, under penalty of law, that the applicable pathogen requirements in 30 TAC Section 312.82(a) or (b) and the vector attraction reduction requirements in 30 TAC Section 312.83(b) have been met for each site on which bulk sewage sludge is applied. This determination has been made under my direction and supervision in accordance with the system designed to ensure that qualified personnel properly gather and evaluate the information used to determine that the management practices have been met. I am aware that there are significant penalties for false certification including fine and imprisonment."

6. The recommended agronomic loading rate from the references listed in Section II.C.3. above, as well as the actual agronomic loading rate shall be retained.

The person who applies bulk sewage sludge or a sewage sludge material shall develop the following information and shall retain the information at the facility site and/or shall be readily available for review by a TCEQ representative indefinitely. If the permittee supplies the sludge to another person who land applies the sludge, the permittee shall notify the land applier of the requirements for record keeping found in 30 TAC Section 312.47 for persons who land apply.

1. A certification statement that all applicable requirements (specifically listed) have been met, and that the permittee understands that there are significant penalties for false certification including fine and imprisonment. See 30 TAC Section 312.47(a)(4)(A)(ii) or 30 TAC Section 312.47(a)(5)(A)(ii), as applicable, and to the permittee's specific sludge treatment activities.

2. The location, by street address, and specific latitude and longitude, of each site on which sludge is applied.

3. The number of acres in each site on which bulk sludge is applied.

4. The date and time sludge is applied to each site.

5. The cumulative amount of each pollutant in pounds/acre listed in Table 2 applied to each site.

6. The total amount of sludge applied to each site in dry tons.

The above records shall be maintained on-site on a monthly basis and shall be made available to the Texas Commission on Environmental Quality upon request.

F. Reporting Requirements

The permittee shall report annually to the TCEQ Regional Office (MC Region 12) and Water Quality Compliance Monitoring Team (MC 224) of the Enforcement Division, by September 1 of each year the following information:

1. Results of tests performed for pollutants found in either Table 2 or 3 as appropriate for the permittee's land application practices.

2. The frequency of monitoring listed in Section I.C. which applies to the permittee.

3. Toxicity Characteristic Leaching Procedure (TCLP) results.

4. Identity of hauler(s) and TCEQ transporter number.

5. PCB concentration in sludge in mg/kg.

6. Date(s) of disposal.

7. Owner of disposal site(s).

8. Texas Commission on Environmental Quality registration number, if applicable.

9. Amount of sludge disposal dry weight (lbs/acre) at each disposal site.

10. The concentration (mg/kg) in the sludge of each pollutant listed in Table 1 (defined as a monthly average) as well as the applicable pollutant concentration criteria (mg/kg) listed in Table 3 above, or the applicable pollutant loading rate limit (lbs/acre) listed in Table 2 above if it exceeds 90% of the limit.

11. Level of pathogen reduction achieved (Class A or Class B).

12. Alternative used as listed in Section I.B.3.(a. or b.). Alternatives describe how the pathogen reduction requirements are met. If Class B sludge, include information on how site restrictions were met.

13. Vector attraction reduction alternative used as listed in Section I.B.4.

14. Annual sludge production in dry tons/year.

15. Amount of sludge land applied in dry tons/year.

16. The certification statement listed in either 30 TAC Section 312.47(a)(4)(A)(ii) or 30 TAC Section 312.47(a)(5)(A)(ii) as applicable to the permittee's sludge treatment activities, shall be attached to the annual reporting form.

17. When the amount of any pollutant applied to the land exceeds 90% of the cumulative pollutant loading rate for that pollutant, as described in Table 2, the permittee shall report the following information as an attachment to the annual reporting form.

    a. The location, by street address, and specific latitude and longitude.

    b. The number of acres in each site on which bulk sewage sludge is applied.

    c. The date and time bulk sewage sludge is applied to each site.

    d. The cumulative amount of each pollutant (i.e., pounds/acre) listed in Table 2 in the bulk sewage sludge applied to each site.

    e. The amount of sewage sludge (i.e., dry tons) applied to each site.

    The above records shall be maintained on a monthly basis and shall be made available to the Texas Commission on Environmental Quality upon request.

SECTION III. REQUIREMENTS APPLYING TO ALL SEWAGE SLUDGE DISPOSED IN A MUNICIPAL SOLID WASTE LANDFILL

A. The permittee shall handle and dispose of sewage sludge in accordance with 30 TAC Chapter 330 and all other applicable state and federal regulations to protect public health and the environment from any reasonably anticipated adverse effects due to any toxic pollutants that may be present. The permittee shall ensure that the sewage sludge meets the requirements in 30 TAC Chapter 330 concerning the quality of the sludge disposed in a municipal solid waste landfill.

B. If the permittee generates sewage sludge and supplies that sewage sludge to the owner or operator of a Municipal Solid Waste Landfill (MSWLF) for disposal, the permittee shall provide to the owner or operator of the MSWLF appropriate information needed to be in compliance with the provisions of this permit.

C. The permittee shall give 180 days prior notice to the Executive Director in care of the Wastewater Permitting Section (MC 148) of the Water Quality Division of any change planned in the sewage sludge disposal practice.

D. Sewage sludge shall be tested annually in accordance with the method specified in both 40 CFR Part 261, Appendix II and 40 CFR Part 268, Appendix I (Toxicity Characteristic Leaching Procedure) or other method, which receives the prior approval of the TCEQ for contaminants listed in Table 1 of 40 CFR Section 261.24. Sewage sludge failing this test shall be managed according to RCRA standards for generators of hazardous waste, and the waste's disposition must be in accordance with all applicable requirements for hazardous waste processing, storage, or disposal.

Following failure of any TCLP test, the management or disposal of sewage sludge at a facility other than an authorized hazardous waste processing, storage, or disposal facility shall be prohibited until such time as the permittee can demonstrate the sewage sludge no longer exhibits the hazardous waste toxicity characteristics (as demonstrated by the results of the TCLP tests). A written report shall be provided to both the TCEQ Registration and Reporting Section (MC 129) of the Registration, Review, and Reporting Division and the Regional Director (MC Region 12) of the appropriate TCEQ field office within 7 days after failing the TCLP Test.

The report shall contain test results, certification that unauthorized waste management has stopped and a summary of alternative disposal plans that comply with RCRA standards for the management of hazardous waste. The report shall be addressed to: Director, Registration, Review, and Reporting Division (MC 129), Texas Commission on Environmental Quality, P. O. Box 13087, Austin, Texas 78711-3087. In addition, the permittee shall prepare an annual report on the results of all sludge toxicity testing. This annual report shall be submitted to the TCEQ Regional Office (MC Region 12) and the Water Quality Compliance Monitoring Team (MC 224) of the Enforcement Division by September 1 of each year.

E. Sewage sludge shall be tested as needed, in accordance with the requirements of 30 TAC Chapter 330.

F. Record keeping Requirements

The permittee shall develop the following information and shall retain the information for five years.

1. The description (including procedures followed and the results) of all liquid Paint Filter Tests performed.

2. The description (including procedures followed and results) of all TCLP tests performed.

The above records shall be maintained on-site on a monthly basis and shall be made available to the Texas Commission on Environmental Quality upon request.

G. Reporting Requirements

The permittee shall report annually to the TCEQ Regional Office (MC Region 12) and Water Quality Compliance Monitoring Team (MC 224) of the Enforcement Division by September 1 of each year the following information:

1. Toxicity Characteristic Leaching Procedure (TCLP) results.
2. Annual sludge production in dry tons/year.
3. Amount of sludge disposed in a municipal solid waste landfill in dry tons/year.
4. Amount of sludge transported interstate in dry tons/year.
5. A certification that the sewage sludge meets the requirements of 30 TAC Chapter 330 concerning the quality of the sludge disposed in a municipal solid waste landfill.
6. Identity of hauler(s) and transporter registration number.
7. Owner of disposal site(s).
8. Location of disposal site(s).
9. Date(s) of disposal.

The above records shall be maintained on-site on a monthly basis and shall be made available to the Texas Commission on Environmental Quality upon request.

OTHER REQUIREMENTS

1. The permittee shall employ or contract with one or more licensed wastewater treatment facility operators or wastewater system operations companies holding a valid license or registration according to the requirements of 30 TAC Chapter 30, Occupational Licenses and Registrations and in particular 30 TAC Chapter 30, Subchapter J, Wastewater Operators and Operations Companies.

   During the Interim I and Interim II phases this Category C Facility must be operated by a chief operator or an operator holding a Category C license or higher. During the Final phase this Category B facility must be operated by a chief operator or an operator holding a Category B license or higher. The facility must be operated a minimum of five days per week by the licensed chief operator or an operator holding the required level of license or higher. The licensed chief operator or operator holding the required level of license or higher must be available by telephone or pager seven days per week. Where shift operation of the wastewater treatment facility is necessary, each shift which does not have the on-site supervision of the licensed chief operator must be supervised by an operator in charge who is licensed not less than one level below the category for the facility.

2. The facility is not located in the Coastal Management Program boundary.

3. There is no mixing zone established for this discharge to an intermittent stream with perennial pools. Chronic toxic criteria apply at the point of discharge.

4. The permittee is hereby placed on notice that this permit may be reviewed by the TCEQ after the completion of any new intensive water quality survey on Segment No. 0902 of the Trinity-San Jacinto Coastal Basin and any subsequent updating of the water quality model for Segment No. 0902, in order to determine if the limitations and conditions contained herein are consistent with any such revised model. The permit may be amended, pursuant to 30 TAC Section 305.62, as a result of such review. The permittee is also hereby placed on notice that effluent limits may be made more stringent at renewal based on, for example, any change to modeling protocol approved in the TCEQ Continuing Planning Process.

5. The permittee shall comply with the requirements of 30 TAC Section 309.13 (a) through (d). In addition, by ownership of the required buffer zone area, the permittee shall comply with the requirements of 30 TAC Section 309.13(e).

6. The permittee shall notify the TCEQ Regional Office (MC Region 12) and the Applications Review and Processing Team (MC 148) of the Water Quality Division, as well as the Harris County Public Health and Environmental Services Pollution Control Division, in writing at least forty-five (45) days prior to the completion of the 0.95 MGD treatment facilities and the 1.5 MGD treatment facilities.

7. The permittee shall provide facilities for the protection of its wastewater treatment facilities from a 100-year flood.

8. Prior to operation of the 0.95 MGD Interim II phase and the 1.5 MGD Final phase facility, the permittee shall submit to the TCEQ Wastewater Permitting Section (MC 148) a summary submittal letter in accordance with the requirements in 30 TAC Section 317.1. If requested by the Wastewater Permitting Section, the permittee shall submit plans, specifications and a final engineering design report which comply with 30 TAC Chapter 317, Design Criteria for Sewerage Systems. The permittee shall clearly show how the treatment system will meet the permitted effluent limitations required on Page 2a and Page 2b of the permit.

9. In addition, the permittee is also authorized to transport sludge from the wastewater treatment facility, by a licensed hauler or via pipeline, to another of the permittee's permitted wastewater treatment plants, to be treated and then disposed of with the sludge from the plant accepting the sludge.

   The permittee shall keep records of all sludge removed from the wastewater treatment plant and these records shall include the following information:
   a. The volume of sludge transported to another treatment plant;
   b. The date(s) that sludge was transported;
   c. The identity of haulers, if applicable; and
   d. The TCEQ permit number, and location of the wastewater treatment plant to which the sludge is transported.

   These records shall be maintained on a monthly basis and shall be reported to the TCEQ Regional Office (MC Region 12) and the TCEQ Water Quality Compliance Monitoring Team (MC 224) of the Enforcement Division by September 1 of each year.

CONTRIBUTING INDUSTRIES AND PRETREATMENT REQUIREMENTS

1. The permittee shall operate an industrial pretreatment program in accordance with Section 402(b)(8) of the Clean Water Act, the General Pretreatment Regulations (40 CFR Part 403) and the approved POTW pretreatment program submitted by the permittee. The pretreatment program was approved on **November 27, 1984**, and modified on **February 26, 1993.** The POTW pretreatment program is hereby incorporated by reference and shall be implemented in a manner consistent with the following requirements.

    a. Industrial user (IU) information shall be updated at a frequency adequate to ensure that all IUs are properly characterized at all times.

    b. The frequency and nature of IU compliance monitoring activities by the permittee shall be commensurate with the character, consistency and volume of waste. However, in keeping with the requirements of 40 CFR §403.8 (f)(2)(v), the permittee is required to inspect and sample the effluent from each Significant Industrial User (SIU) at least once a year. This is in addition to any industrial self-monitoring activities.

    c. The permittee shall enforce and obtain remedies for noncompliance by any IUs with applicable pretreatment standards and requirements.

    d. The permittee shall control through permit, order, or similar means, the contribution to the POTW by each IU to ensure compliance with applicable Pretreatment Standards and Requirements. In the case of IUs identified as significant under 40 CFR §403.3(t), this control shall be achieved through permits or equivalent individual control mechanisms issued to each user. Such control mechanisms must be enforceable and contain, at a minimum, the following conditions:

        (1) Statement of duration (in no case more than five years);

        (2) Statement of non-transferability without, at a minimum, prior notification to the POTW and provision of a copy of the existing control mechanism to the new owner or operator;

        (3) Effluent limits based on applicable general pretreatment standards, categorical pretreatment standards, local limits, and State and local law;

        (4) Self-monitoring, sampling, reporting, notification and recordkeeping requirements, including an identification of the pollutants to be monitored, sampling location, sampling frequency, and sample type, based on the applicable general pretreatment standards in 40 CFR Part 403, categorical pretreatment standards, local limits, and State and local law; and

        (5) Statement of applicable civil and criminal penalties for violation of pretreatment standards and requirements, and any applicable compliance schedule. Such schedules may not extend the compliance date beyond federal deadlines.

    e. The permittee shall evaluate, at least once every two years, whether each SIU needs a plan to control slug discharges. If the POTW decides that a slug control plan is needed, the plan shall contain at least the minimum elements required in 40 CFR §403.8(f)(2)(v).

f. The permittee shall provide adequate staff, equipment, and support capabilities to carry out all elements of the pretreatment program.

g. The approved program shall not be modified by the permittee without the prior approval of the TCEQ Storm Water & Pretreatment Team (MC 148) Water Quality Division.

2. The permittee shall establish and enforce specific local limits to implement the provisions of 40 CFR §403.5. For each POTW with an approved pretreatment program, the permittee shall continue to develop and enforce local limits as necessary. Additionally, for each POTW with an approved pretreatment program, the permittee shall modify its pretreatment program, including the Legal Authority, Enforcement Response Plan and/or Standard Operating Procedures, if required by the Executive Director to reflect changing conditions at the POTW. Substantial modifications will be approved in accordance with 40 CFR §403.18 and the modification will become effective upon approval by the Executive Director in accordance with 40 CFR §403.18.

   Upon approval by the Executive Director, the requirement to develop and enforce specific prohibitions and/or limits to implement the prohibitions and limits set forth in 40 CFR §§403.5(a)(1), (b), (c) (1) and (3), and (d) is a condition of this permit. The specific prohibitions set out in 40 CFR §403.5(b) shall be enforced by the permittee unless modified under this provision.

3. The permittee shall prepare annually a list of IUs which during the preceding twelve months were in significant noncompliance with applicable pretreatment requirements. For the purposes of this Part, significant noncompliance shall be determined based upon the more stringent of either criteria established at 40 CFR §403.8(f)(2)(vii) [rev. 7/24/90] or criteria established in the approved POTW pretreatment program. This list is to be published annually in the largest daily newspaper in the municipality in which the POTW is located during the month of **November**.

   In addition, during the month of **November**, the permittee shall submit an updated pretreatment program status report to the TCEQ Storm Water & Pretreatment Team (MC 148) of the Water Quality Division containing the following information.

   a. An updated list of all SIUs. For each IU listed the following information shall be included:

      (1) Standard Industrial Classification (SIC) code and categorical determination;

      (2) Control document status. Whether the user has an effective control document, and the date such document was last issued, reissued, or modified, (indicate which IUs were added to the system (or newly identified) within the previous 12 months);

      (3) A summary of all monitoring activities performed within the previous 12 months. The following information shall be reported:

         * Total number of inspections performed; and

         * Total number of sampling visits made.

      (4) Status of compliance with both effluent limitations and reporting requirements. Compliance status shall be defined as follows:

         * Compliant (C) - no violations during the previous 12 month period;

* Non-compliant (NC) - one or more violations during the previous 12 months but does not meet the criteria for significantly noncompliant IUs; and

* Significant Noncompliance (SNC) - in accordance with requirements described in part 3 above.

(5) For significantly noncompliant IUs, indicate the nature of the violations, the type and number of actions taken (notice of violation, administrative order, criminal or civil suit, fines or penalties collected, etc.) and current compliance status. If ANY IU was on a schedule to attain compliance with effluent limits, indicate the date the schedule was issued and the date compliance is to be attained.

b. A list of all SIUs whose authorization to discharge was terminated or revoked during the preceding 12 month period and the reason for termination.

c. A report on any interference, pass through, upset or POTW permit violations known or suspected to be caused by industrial contributors and actions taken by the permittee in response.

d. A copy of the newspaper publication of the significantly noncompliant IUs giving the name of the newspaper and the date published; and

e. The information requested may be submitted in tabular form as per the example tables provided for your convenience.

4. The permittee shall provide adequate notification to the Executive Director in care of the Wastewater Permitting Section (MC 148) of the Water Quality Division, in writing, within 30 days subsequent to the permittee's knowledge of the following:

a. Any new introduction of pollutants into the treatment works from an indirect discharger which would be subject to Sections 301 and 306 of the Clean Water Act if it were directly discharging those pollutants; and

b. Any substantial change in the volume or character of pollutants being introduced into the treatment works by a source introducing pollutants into the treatment works at the time of issuance of the permit.

Adequate notice shall include information on the quality and quantity of effluent to be introduced into the treatment works, and any anticipated impact of the change on the quality or quantity of effluent to be discharged from the POTW.

TPDES Pretreatment Program Annual Report Form
for Updated Significant Industrial Users List

Reporting month/year: _____, ____ to _____, ____

TPDES Permit No. _____ Permittee: _____ Treatment Plant: _____

PRETREATMENT PROGRAM STATUS REPORT UPDATED SIGNIFICANT INDUSTRIAL USERS LIST												
INDUSTRIAL USER	SIC CODE	CATEGORICAL DETERMINATION	CONTROL DOCUMENT		NEW USER	TIMES INSPECTED	TIMES SAMPLED	COMPLIANCE STATUS				
			Y / N	LAST ACTION				REPORTS				EFFLUENT LIMITS
								BMR	90-DAY COMPLIANCE	SEMI-ANNUAL	SELF MONITORING	

TPDES Pretreatment Program Annual Report Form
for Industrial Inventory Modifications

Reporting month/year: _____, ____ to _____, ____

TPDES Permit No. _____ Permittee: _____ Treatment Plant: _____

INDUSTRIAL INVENTORY MODIFICATIONS					
FACILITY NAME, ADDRESS AND CONTACT PERSON	ADD, CHANGE, DELETE	IF DELETION:	IF ADDITION OR SIGNIFICANT CHANGE:		
		REASON FOR DELETION	PROCESS DESCRIPTION	POLLUTANTS	FLOW RATE

TPDES Pretreatment Program Annual Report Form for Enforcement Actions Taken

Reporting month/year: _____, ____ to _____, ____

TPDES Permit No. _____ Permittee: _____ Treatment Plant: _____ Overall % SNC_____

SIGNIFICANTLY NONCOMPLIANT USERS - ENFORCEMENT ACTIONS TAKEN												
INDUSTRIAL USER	NATURE OF VIOLATION		NUMBER OF ACTIONS TAKEN					PENALTIES COLLECTED	COMPLIANCE SCHEDULE		CURRENT STATUS	COMMENTS
	REPORTS	LIMITS	NOV	A.O.	CIVIL	CRIMINAL	OTHER		DATE ISSUED	DATE DUE		

CHRONIC BIOMONITORING REQUIREMENTS: FRESHWATER

The provisions of this Section apply to Outfall 001 for whole effluent toxicity testing (biomonitoring). Biomonitoring requirements become effective upon completion of final phase or discharge of 1 MGD or greater.

1. Scope, Frequency and Methodology

   a. The permittee shall test the effluent for toxicity in accordance with the provisions below. Such testing will determine if an appropriately dilute effluent sample adversely affects the survival, reproduction, or growth of the test organisms.

   b. The permittee shall conduct the following toxicity tests utilizing the test organisms, procedures and quality assurance requirements specified in this Part of the permit and in accordance with "Short-Term Methods for Estimating the Chronic Toxicity of Effluents and Receiving Waters to Freshwater Organisms, Fourth Edition" (EPA-821-R-02-013), or the most recent update:

      1) Chronic static renewal survival and reproduction test using the water flea (*Ceriodaphnia dubia*) (Method 1002.0 or the most recent update). This test should be terminated when 60% of the surviving adults in the control produce three broods or at the end of eight days, whichever comes first. This test shall be conducted once per quarter.

      2) Chronic static renewal 7-day larval survival and growth test using the fathead minnow (*Pimephales promelas*) (Method 1000.0 or the most recent update). A minimum of five replicates with eight organisms per replicate shall be used in the control and in each dilution. This test shall be conducted once per quarter.

      The permittee must perform and report a valid test for each test species during the prescribed reporting period. An invalid test must be repeated during the same reporting period. An invalid test is herein defined as any test failing to satisfy the test acceptability criteria, procedures, and quality assurance requirements specified in the test methods and permit. All test results, valid or invalid, must be submitted as described below.

   c. The permittee shall use five effluent dilution concentrations and a control in each toxicity test. These additional effluent concentrations are 32%, 42%, 56%, 75%, and 100% effluent. The critical dilution, defined as 100% effluent, is the effluent concentration representative of the proportion of effluent in the receiving water during critical low flow or critical mixing conditions.

   d. This permit may be amended to require a Whole Effluent Toxicity (WET) limit, Chemical-Specific (CS) effluent limits, a Best Management Practice (BMP), additional toxicity testing, and/or other appropriate actions to address toxicity. The permittee may be required to conduct additional biomonitoring tests and/or a Toxicity Reduction Evaluation (TRE) if biomonitoring data indicate multiple numbers of unconfirmed toxicity events.

   e. Testing Frequency Reduction

      1) If none of the first four consecutive quarterly tests demonstrates significant lethal or sub-lethal effects, the permittee may submit this information in writing and, upon approval from the Water Quality Standards Team, reduce the testing frequency to once per six months for the invertebrate test species and once per year for the vertebrate test species.

2) If one or more of the first four consecutive quarterly tests demonstrates significant sub-lethal effects, the permittee shall continue quarterly testing for that species until four consecutive quarterly tests demonstrate no significant sub-lethal effects. At that time, the permittee may apply for the appropriate testing frequency reduction for that species.

3) If one or more of the first four consecutive quarterly tests demonstrates significant lethal effects, the permittee shall continue quarterly testing for that species until the permit is reissued. If a testing frequency reduction had been previously granted and a subsequent test demonstrates significant lethal effects, the permittee will resume a quarterly testing frequency for that species until the permit is reissued.

2. Required Toxicity Testing Conditions

a. Test Acceptance - The permittee shall repeat any toxicity test, including the control and all effluent dilutions, which fail to meet the following criteria:

1) a control mean survival of 80% or greater;

2) a control mean number of water flea neonates per surviving adult of 15 or greater;

3) a control mean dry weight of surviving fathead minnow larvae of 0.25 mg or greater;

4) a control Coefficient of Variation percent (CV%) of 40 or less between replicates for the young of surviving females in the water flea reproduction and survival test; and the growth and survival endpoints in the fathead minnow growth and survival test.

5) a critical dilution CV% of 40 or less for young of surviving females in the water flea reproduction and survival test; and the growth and survival endpoints for the fathead minnow growth and survival test. However, if statistically significant lethal or nonlethal effects are exhibited at the critical dilution, a CV% greater than 40 shall not invalidate the test.

6) a Percent Minimum Significant Difference of 47 or less for water flea reproduction;

7) a Percent Minimum Significant Difference of 30 or less for fathead minnow growth.

b. Statistical Interpretation

1) For the water flea survival test, the statistical analyses used to determine if there is a significant difference between the control and an effluent dilution shall be Fisher's Exact Test as described in the "Short-Term Methods for Estimating the Chronic Toxicity of Effluents and Receiving Waters to Freshwater Organisms, Fourth Edition" (EPA-821-R-02-013), or the most recent update thereof.

2) For the water flea reproduction test and the fathead minnow larval survival and growth tests, the statistical analyses used to determine if there is a significant difference between the control and an effluent dilution shall be in accordance with the methods described in the "Short-Term Methods for Estimating the Chronic Toxicity of Effluents and Receiving Waters to Freshwater Organisms, Fourth Edition" (EPA-821-R-02-013), or the most recent update thereof.

3) The permittee is responsible for reviewing test concentration-response relationships to ensure that calculated test-results are interpreted and reported correctly. The EPA manual, "Method Guidance and Recommendation for Whole Effluent Toxicity (WET) Testing (40 CFR Part 136)" (EPA 821-B-00-004) provides guidance on determining the validity of test results.

4) If significant lethality is demonstrated (that is, there is a statistically significant difference in survival at the critical dilution when compared to the control), the conditions of test acceptability are met, and the survival of the test organisms are equal to or greater than 80% in the critical dilution and all dilutions below that, then the permittee shall report a survival No Observed Effect Concentration (NOEC) of not less than the critical dilution for the reporting requirements.

5) The NOEC is defined as the greatest effluent dilution at which no significant effect is demonstrated. The Lowest Observed Effect Concentration (LOEC) is defined as the lowest effluent dilution at which a significant effect is demonstrated. A significant effect is herein defined as a statistically significant difference at the 95% confidence level between the survival, reproduction, or growth of the test organism(s) in a specified effluent dilution compared to the survival, reproduction, or growth of the test organism(s) in the control (0% effluent).

6) The use of NOECs and LOECs assumes either a monotonic (continuous) concentration-response relationship or a threshold model of the concentration-response relationship. For any test result that demonstrates a non-monotonic (non-continuous) response, the NOEC should be determined based on the guidance manual referenced in Item 3 above and a full report will be submitted to the Water Quality Standards Team

7) Pursuant to the responsibility assigned to the permittee in Part 2.b.3), test results that demonstrate a non-monotonic (non-continuous) concentration-response relationship may be submitted, prior to the due date, for technical review. The above-referenced guidance manual will be used when making a determination of test acceptability.

8) The Water Quality Standards Team will review test results (i.e., Table 1 and Table 2 forms) for consistency with established TCEQ rules, procedures, and permit requirements.

c. Dilution Water

1) Dilution water used in the toxicity tests shall be the receiving water collected at a point upstream of the discharge as close as possible to the discharge point, but unaffected by the discharge. Where the toxicity tests are conducted on effluent discharges to receiving waters that are classified as intermittent streams, or where the toxicity tests are conducted on effluent discharges where no receiving water is available due to zero flow conditions, the permittee shall; (a) substitute a synthetic dilution water that has a pH, hardness, and alkalinity similar to that of the closest downstream perennial water unaffected by the discharge, or (b) utilize the closest downstream perennial water unaffected by the discharge.

2) Where the receiving water proves unsatisfactory as a result of pre-existing instream toxicity (i.e. fails to fulfill the test acceptance criteria of item 2.a.), the permittee may substitute synthetic dilution water for the receiving water in all subsequent tests provided the unacceptable receiving water test met the following stipulations:

a) a synthetic lab water control was performed (in addition to the receiving water control) which fulfilled the test acceptance requirements of item 2.a;

b) the test indicating receiving water toxicity was carried out to completion (i.e., 7 days);

c) the permittee submitted all test results indicating receiving water toxicity with the reports and information required in Part 3 of this Section.

The synthetic dilution water shall have a pH, hardness, and alkalinity similar to that of the receiving water or a natural water in the drainage basin that is unaffected by the discharge, provided the magnitude of these parameters will not cause toxicity in a synthetic dilution water control that has been formulated to match the pH, hardness, and alkalinity naturally found in the receiving water. Upon approval, the permittee may substitute other appropriate dilution water with chemical and physical characteristics similar to that of the receiving water.

d. Samples and Composites

1) The permittee shall collect a minimum of three flow-weighted 24-hour composite samples from Outfall 001. The second and third 24-hour composite samples will be used for the renewal of the dilution concentrations for each toxicity test. A 24-hour composite sample consists of a minimum of 12 effluent portions collected at equal time intervals representative of a 24-hour operating day and combined proportionally to flow, or a sample continuously collected proportionally to flow over a 24-hour operating day.

2) The permittee shall collect the 24-hour composite samples such that the samples are representative of any periodic episode of chlorination, biocide usage, or other potentially toxic substance discharged on an intermittent basis.

3) The permittee shall initiate the toxicity tests within 36 hours after collection of the last portion of the first 24-hour composite sample. The holding time for any subsequent 24-hour composite sample shall not exceed 72 hours. Samples shall be maintained at a temperature of 0-6 degrees Centigrade during collection, shipping, and storage.

4) If flow from the outfall being tested ceases during the collection of effluent samples, the requirements for the minimum number of effluent samples, the minimum number of effluent portions, and the sample holding time, are waived during that sampling period. However, the permittee must have collected an effluent composite sample volume sufficient to complete the required toxicity tests with renewal of the effluent. When possible, the effluent samples used for the toxicity tests shall be collected on separate days if the discharge occurs over multiple days. The effluent composite sample collection duration and the static renewal protocol associated with the abbreviated sample collection must be documented in the full report required in Part 3.

5) The effluent samples shall not be dechlorinated after sample collection.

3. Reporting

All reports, tables, plans, summaries, and related correspondence required in any Part of this Section shall be submitted to the attention of the Water Quality Standards Team (MC 150) of the Water Quality Division. All DMRs, including DMRs with biomonitoring data, should be sent to the Water Quality Compliance Monitoring Team of the Enforcement Division (MC 224).

a. The permittee shall prepare a full report of the results of all tests conducted pursuant to this permit in accordance with the Report Preparation Section of "Short-Term Methods for Estimating the Chronic Toxicity of Effluents and Receiving Waters to Freshwater Organisms, Fourth Edition" (EPA-821-R-02-013), or the most recent update, for every valid and invalid toxicity test initiated whether carried to completion or not. All full reports shall be retained for 3 years at the plant site and shall be available for inspection by TCEQ personnel.

b. A full report must be submitted with the first valid biomonitoring test results for each test species and with the first test results any time the permittee subsequently employs a different test laboratory. Full reports need not be submitted for subsequent testing unless specifically requested. The permittee shall routinely report the results of each biomonitoring test on the Table 1 forms provided with this permit. All Table 1 reports must include the information specified in the Table 1 form attached to this permit.

   1) Annual biomonitoring test results are due on or before January 20th for biomonitoring conducted during the previous 12 month period.

   2) Semiannual biomonitoring test results are due on or before July 20th and January 20th for biomonitoring conducted during the previous 6 month period.

   3) Quarterly biomonitoring test results are due on or before April 20th, July 20th, October 20th, and January 20th, for biomonitoring conducted during the previous calendar quarter.

   4) Monthly biomonitoring test results are due on or before the 20th day of the month following sampling.

c. Enter the following codes on the DMR for the appropriate parameters for valid tests only:

   1) For the water flea, Parameter TLP3B, enter a "1" if the NOEC for survival is less than the critical dilution; otherwise, enter a "0."

   2) For the water flea, Parameter TOP3B, report the NOEC for survival.

   3) For the water flea, Parameter TXP3B, report the LOEC for survival.

   4) For the water flea, Parameter TWP3B, enter a "1" if the NOEC for reproduction is less than the critical dilution; otherwise, enter a "0."

   5) For the water flea, Parameter TPP3B, report the NOEC for reproduction.

   6) For the water flea, Parameter TYP3B, report the LOEC for reproduction.

   7) For the fathead minnow, Parameter TLP6C,enter a "1" if the NOEC for survival is less than the critical dilution; otherwise, enter a "0."

   8) For the fathead minnow, Parameter TOP6C, report the NOEC for survival.

   9) For the fathead minnow, Parameter TXP6C, report the LOEC for survival.

10) For the fathead minnow, Parameter TWP6C,enter a "1" if the NOEC for growth is less than the critical dilution; otherwise, enter a "0."

11) For the fathead minnow, Parameter TPP6C, report the NOEC for growth.

12) For the fathead minnow, Parameter TYP6C, report the LOEC for growth

d. Enter the following codes on the DMR for retests only:

1) For retest number 1, Parameter 22415, enter a "1" if the NOEC for survival is less than the critical dilution; otherwise, enter a "0."

2) For retest number 2, Parameter 22416, enter a "1" if the NOEC for survival is less than the critical dilution; otherwise, enter a "0."

4. Persistent Toxicity

The requirements of this Part apply only when a test demonstrates a significant effect at the critical dilution. A significant effect is defined as a statistically significant difference, at the 95% confidence level, between a specified endpoint (survival, growth, or reproduction) of the test organism in a specified effluent dilution when compared to the specified endpoint of the test organism in the control. Significant lethality is defined as a statistically significant difference in survival at the critical dilution when compared to the survival of the test organism in the control. Significant sublethality is defined as a statistically significant difference in growth/reproduction at the critical dilution when compared to the growth/reproduction of the test organism in the control.

a. The permittee shall conduct a total of 2 additional tests (retests) for any species that demonstrates a significant effect (lethal or sublethal) at the critical dilution. The two retests shall be conducted monthly during the next two consecutive months. The permittee shall not substitute either of the two retests in lieu of routine toxicity testing. All reports shall be submitted within 20 days of test completion. Test completion is defined as the last day of the test. The retests shall also be reported on the DMRs as specified in Part 3.d.

b. If the retests are performed due to a demonstration of significant lethality, and one or both of the two retests specified in item 4.a. demonstrates significant lethality, the permittee shall initiate the TRE requirements as specified in Part 5. The provisions of item 4.a. are suspended upon completion of the two retests and submittal of the TRE Action Plan and Schedule defined in Part 5.

If neither test demonstrates significant lethality and the permittee is testing under the reduced testing frequency provision of Part 1.e., the permittee shall return to a quarterly testing frequency for that species.

c. If the two retests are performed due to a demonstration of significant sublethality, and one or both of the two retests specified in item 4.a. demonstrates significant lethality, the permittee shall again perform two retests as stipulated in item 4.a.

d. If the two retests are performed due to a demonstration of significant sublethality, and both retests pass, the permittee shall continue testing at the quarterly frequency until such time that the permittee can invoke the reduced testing frequency provision specified in Part 1.e.

e. Regardless of whether retesting for lethal or sublethal effects, or a combination of the two, no more than one retest per month is required for a species.

5. Toxicity Reduction Evaluation

a. Within 45 days of the last test day of the retest that demonstrates significant lethality, the permittee shall submit a General Outline for initiating a TRE. The outline shall include, but not be limited to, a description of project personnel, a schedule for obtaining consultants (if needed), a discussion of influent and/or effluent data available for review, a sampling and analytical schedule, and a proposed TRE initiation date.

b. Within 90 days of the last test day of the retest that demonstrates significant lethality, the permittee shall submit a TRE Action Plan and Schedule for conducting a TRE. The plan shall specify the approach and methodology to be used in performing the TRE. A Toxicity Reduction Evaluation is a step-wise investigation combining toxicity testing with physical and chemical analysis to determine actions necessary to eliminate or reduce effluent toxicity to a level not effecting significant lethality at the critical dilution. The TRE Action Plan shall lead to the successful elimination of significant lethal effects at the critical dilution for both test species defined in item 1.b. As a minimum, the TRE Action Plan shall include the following:

1) Specific Activities - The TRE Action Plan shall specify the approach the permittee intends to utilize in conducting the TRE, including toxicity characterizations, identifications, confirmations, source evaluations, treatability studies, and/or alternative approaches. When conducting characterization analyses, the permittee shall perform multiple characterizations and follow the procedures specified in the document entitled, "Toxicity Identification Evaluation: Characterization of Chronically Toxic Effluents, Phase I" (EPA/600/6-91/005F), or alternate procedures. The permittee shall perform multiple identifications and follow the methods specified in the documents entitled, "Methods for Aquatic Toxicity Identification Evaluations, Phase II Toxicity Identification Procedures for Samples Exhibiting Acute and Chronic Toxicity" (EPA/600/R-92/080) and "Methods for Aquatic Toxicity Identification Evaluations, Phase III Toxicity Confirmation Procedures for Samples Exhibiting Acute and Chronic Toxicity" (EPA/600/R-92/081). All characterization, identification, and confirmation tests shall be conducted in an orderly and logical progression;

2) Sampling Plan - The TRE Action Plan should describe sampling locations, methods, holding times, chain of custody, and preservation techniques. The effluent sample volume collected for all tests shall be adequate to perform the toxicity characterization/ identification/ confirmation procedures, and chemical-specific analyses when the toxicity tests show significant lethality. Where the permittee has identified or suspects specific pollutant(s) and/or source(s) of effluent toxicity, the permittee shall conduct, concurrent with toxicity testing, chemical-specific analyses for the identified and/or suspected pollutant(s) and/or source(s) of effluent toxicity;

3) Quality Assurance Plan - The TRE Action Plan should address record keeping and data evaluation, calibration and standardization, baseline tests, system blanks, controls, duplicates, spikes, toxicity persistence in the samples, randomization, reference toxicant control charts, as well as mechanisms to detect artifactual toxicity; and

4) Project Organization - The TRE Action Plan should describe the project staff, project manager, consulting engineering services (where applicable), consulting analytical and toxicological services, etc.

c. Within 30 days of submittal of the TRE Action Plan and Schedule, the permittee shall implement the TRE with due diligence.

d. The permittee shall submit quarterly TRE Activities Reports concerning the progress of the TRE. The quarterly reports are due on or before April 20th, July 20th, October 20th, and January 20th. The report shall detail information regarding the TRE activities including:

1) results and interpretation of any chemical-specific analyses for the identified and/or suspected pollutant(s) performed during the quarter;

2) results and interpretation of any characterization, identification, and confirmation tests performed during the quarter;

3) any data and/or substantiating documentation which identifies the pollutant(s) and/or source(s) of effluent toxicity;

4) results of any studies/evaluations concerning the treatability of the facility's effluent toxicity;

5) any data which identifies effluent toxicity control mechanisms that will reduce effluent toxicity to the level necessary to meet no significant lethality at the critical dilution; and

6) any changes to the initial TRE Plan and Schedule that are believed necessary as a result of the TRE findings.

Copies of the TRE Activities Report shall also be submitted to the U.S. EPA Region 6 office.

e. During the TRE, the permittee shall perform, at a minimum, quarterly testing using the more sensitive species; testing for the less sensitive species shall continue at the frequency specified in Part 1.b.

f. If the effluent ceases to effect significant lethality (herein as defined below) the permittee may end the TRE. A "cessation of lethality" is defined as no significant lethality for a period of 12 consecutive months with at least monthly testing. At the end of the 12 months, the permittee shall submit a statement of intent to cease the TRE and may then resume the testing frequency specified in Part 1.b. The permittee may only apply the "cessation of lethality" provision once.

This provision accommodate situations where operational errors and upsets, spills, or sampling errors triggered the TRE, in contrast to a situation where a single toxicant or group of toxicants cause lethality. This provision does not apply as a result of corrective actions taken by the permittee. "Corrective actions" are herein defined as proactive efforts which eliminate or reduce effluent toxicity. These include, but are not limited to, source reduction or elimination, improved housekeeping, changes in chemical usage, and modifications of influent streams and/or effluent treatment.

The permittee may only apply this cessation of lethality provision once. If the effluent again demonstrates significant lethality to the same species, the permit will be amended to add a WET limit with a compliance period, if appropriate. However, prior to the effective date of the WET limit, the permittee may apply for a permit amendment removing and replacing the WET limit with an alternate toxicity control measure by identifying and confirming the toxicant and/or an appropriate control measure.

g. The permittee shall complete the TRE and submit a Final Report on the TRE Activities no later than 28 months from the last test day of the retest that confirmed significant lethal effects at the critical dilution. The permittee may petition the Executive Director (in writing) for an extension of the 28-month limit. However, to warrant an extension the permittee must have demonstrated due diligence in their pursuit of the TIE/TRE and must prove that circumstances beyond their control stalled the TIE/TRE. The report shall provide information pertaining to the specific control mechanism(s) selected that will, when implemented, result in reduction of effluent toxicity to no significant lethality at the critical dilution. The report will also provide a specific corrective action schedule for implementing the selected control mechanism(s). A copy of the TRE Final Report shall also be submitted to the U.S. EPA Region 6 office.

h. Based upon the results of the TRE and proposed corrective actions, this permit may be amended to modify the biomonitoring requirements, where necessary, to require a compliance schedule for implementation of corrective actions, to specify a WET limit, to specify a BMP, and/or to specify CS limits.

TABLE 1 (SHEET 1 OF 4)

BIOMONITORING REPORTING

CERIODAPHNIA DUBIA SURVIVAL AND REPRODUCTION

		Date Time		Date Time
Dates and Times Composites Collected	No. 1	FROM: _____	TO:	_____
	No. 2	FROM: _____	TO:	_____
	No. 3	FROM: _____	TO:	_____

Test initiated: _____ am/pm _____ date

Dilution water used: _____ Receiving water _____ Synthetic Dilution water

NUMBER OF YOUNG PRODUCED PER ADULT AT END OF TEST

	Percent effluent (%)					
REP	0%	32%	42%	56%	75%	100%
A						
B						
C						
D						
E						
F						
G						
H						
I						
J						
Surviv. Mean						
Total Mean						
CV%*						
PMSD	Acceptable Range 13-47					

*coefficient of variation = standard deviation x 100/mean (calculation based on young of the surviving adults)
Designate males (M), and dead females (D), along with number of neonates (x) released prior to death.

TABLE 1 (SHEET 2 OF 4)

CERIODAPHNIA DUBIA SURVIVAL AND REPRODUCTION TEST

1. Dunnett's Procedure or Steel's Many-One Rank Test or Wilcoxon Rank Sum Test (with Bonferroni adjustment) or t-test (with Bonferroni adjustment) as appropriate:

   Is the mean number of young produced per adult significantly less (p=0.05) than the number of young per adult in the control for the % effluent corresponding to significant nonlethal effects?

   CRITICAL DILUTION (100%): _____ YES _____ NO

PERCENT SURVIVAL

	Percent effluent (%)					
Time of Reading	0%	32%	42%	56%	75%	100%
24h						
48h						
End of Test						

2. Fisher's Exact Test:

   Is the mean survival at test end significantly less (p=0.05) than the control survival for the % effluent corresponding to lethality?

   CRITICAL DILUTION (100%): _____ YES _____ NO

3. Enter percent effluent corresponding to each NOEC/LOEC below:

   a.) NOEC survival = _____% effluent

   b.) LOEC survival = _____% effluent

   c.) NOEC reproduction = _____% effluent

   d.) LOEC reproduction = _____% effluent

TABLE 1 (SHEET 3 OF 4)

BIOMONITORING REPORTING

FATHEAD MINNOW LARVAE GROWTH AND SURVIVAL

Dates and Times Composites Collected

		Date Time		Date Time
	No. 1	FROM: _____	TO:	_____
	No. 2	FROM: _____	TO:	_____
	No. 3	FROM: _____	TO:	_____

Test initiated: _____ am/pm _____ date

Dilution water used: _____ Receiving _____ Synthetic Dilution water

FATHEAD MINNOW GROWTH DATA

Effluent Concentration (%)	Average Dry Weight in milligrams in replicate chambers					Mean Dry Weight	CV%*
	A	B	C	D	E		
0%							
32%							
42%							
56%							
75%							
100%							
PMSD	Acceptable Range 12-30						

* coefficient of variation = standard deviation x 100/mean

1. Dunnett's Procedure or Steel's Many-One Rank Test or Wilcoxon Rank Sum Test (with Bonferroni adjustment) or t-test (with Bonferroni adjustment) as appropriate:

   Is the mean dry weight (growth) at 7 days significantly less (p=0.05) than the control's dry weight (growth) for the % effluent corresponding to significant nonlethal effects?

   CRITICAL DILUTION (100%): _____ YES _____ NO

TABLE 1 (SHEET 4 OF 4)

BIOMONITORING REPORTING
FATHEAD MINNOW GROWTH AND SURVIVAL TEST

FATHEAD MINNOW SURVIVAL DATA

Effluent Concentration (%)	Percent Survival in replicate chambers					Mean percent survival			CV%*
	A	B	C	D	E	24h	48h	7 day	
0%									
32%									
42%									
56%									
75%									
100%									

* coefficient of variation = standard deviation x 100/mean

2. Dunnett's Procedure or Steel's Many-One Rank Test or Wilcoxon Rank Sum Test (with Bonferroni adjustment) or t-test (with Bonferroni adjustment) as appropriate:

   Is the mean survival at 7 days significantly less (p=0.05) than the control survival for the % effluent corresponding to lethality?

   CRITICAL DILUTION (100%): _____ YES _____ NO

3. Enter percent effluent corresponding to each NOEC/LOEC below:

   a.) NOEC survival = _____% effluent

   b.) LOEC survival = _____% effluent

   c.) NOEC growth = _____% effluent

   d.) LOEC growth = _____% effluent

24-HOUR ACUTE BIOMONITORING REQUIREMENTS: FRESHWATER

The provisions of this section apply individually and separately to Outfall 001 for whole effluent toxicity testing (biomonitoring). No samples or portions of samples from one outfall may be composited with samples or portions of samples from another outfall. Biomonitoring requirements become effective upon completion of final phase or discharge of 1 MGD or greater.

1. Scope, Frequency and Methodology

   a. The permittee shall test the effluent for lethality in accordance with the provisions in this Section. Such testing will determine compliance with the Surface Water Quality Standard, 30 TAC §307.6(e)(2)(B), of greater than 50% survival of the appropriate test organisms in 100% effluent for a 24-hour period.

   b. The toxicity tests specified shall be conducted once per six months. The permittee shall conduct the following toxicity tests utilizing the test organisms, procedures, and quality assurance requirements specified in this section of the permit and in accordance with "Methods for Measuring the Acute Toxicity of Effluents and Receiving Waters to Freshwater and Marine Organisms, Fifth Edition" (EPA-821-R-02-012), or the most recent update thereof:

      1) Acute 24-hour static toxicity test using the water flea (*Daphnia pulex* or *Ceriodaphnia dubia*). A minimum of five replicates with eight organisms per replicate shall be used in the control and in each dilution.

      2) Acute 24-hour static toxicity test using the fathead minnow (*Pimephales promelas*). A minimum of five replicates with eight organisms per replicate shall be used in the control and in each dilution.

      The permittee must perform and report a valid test for each test species during the prescribed reporting period. An invalid test must be repeated during the same reporting period. An invalid test is herein defined as any test failing to satisfy the test acceptability criteria, procedures, and quality assurance requirements specified in the test methods and permit. All test results, valid or invalid, must be submitted as described below.

   c. In addition to an appropriate control, a 100% effluent concentration shall be used in the toxicity tests. Except as discussed in item 2.b., the control and/or dilution water shall consist of a standard, synthetic, moderately hard, reconstituted water.

   d. This permit may be amended to require a Whole Effluent Toxicity (WET) limit, a Best Management Practice (BMP), Chemical-Specific (CS) limits, additional toxicity testing, and/or other appropriate actions to address toxicity. The permittee may be required to conduct additional biomonitoring tests and/or a Toxicity Reduction Evaluation (TRE) if biomonitoring data indicate multiple numbers of unconfirmed toxicity events.

   e. If the dilution series specified in the Chronic Biomonitoring Requirements includes a 100% effluent concentration, the results from those tests may fulfill the requirements of this Section; any tests performed in the proper time interval may be substituted. Compliance will be evaluated as specified in item a. The 50% survival in 100% effluent for a 24-hour period standard applies to all tests utilizing a 100% effluent dilution, regardless of whether the results are submitted to comply with the minimum testing frequency defined in item b.

2. Required Toxicity Testing Conditions

a. Test Acceptance - The permittee shall repeat any toxicity test, including the control, if the control fails to meet a mean survival equal to or greater than 90%.

b. Dilution Water - In accordance with item 1.c., the control and/or dilution water shall normally consist of a standard, synthetic, moderately hard, reconstituted water. If the permittee utilizes the results of a chronic test to satisfy the requirements in item 1.e., the permittee may use the receiving water or dilution water that meets the requirements of item 2.a as the control and dilution water.

c. Samples and Composites

1) The permittee shall collect one flow-weighted 24-hour composite sample from Outfall FIELD(1). A 24-hour composite sample consists of a minimum of 12 effluent portions collected at equal time intervals representative of a 24-hour operating day and combined proportional to flow, or a sample continuously collected proportional to flow over a 24-hour operating day.

2) The permittee shall collect the 24-hour composite samples such that the samples are representative of any periodic episode of chlorination, biocide usage, or other potentially toxic substance discharged on an intermittent basis.

3) The permittee shall initiate the toxicity tests within 36 hours after collection of the last portion of the 24-hour composite sample. Samples shall be maintained at a temperature of 0-6 degrees Centigrade during collection, shipping, and storage.

4) If the Outfall ceases discharging during the collection of the effluent composite sample, the requirements for the minimum number of effluent portions are waived. However, the permittee must have collected a composite sample volume sufficient for completion of the required test. The abbreviated sample collection, duration, and methodology must be documented in the full report required in Part 3 of this Section.

5) The effluent samples shall not be dechlorinated after sample collection.

3. Reporting

All reports, tables, plans, summaries, and related correspondence required in any Part of this Section shall be submitted to the attention of the Water Quality Standards Team (MC 150) of the Water Quality Division. All DMRs, including DMRs with biomonitoring data, should be sent to the Water Quality Compliance Monitoring Team of the Enforcement Division (MC 224).

a. The permittee shall prepare a full report of the results of all tests conducted pursuant to this permit in accordance with the Report Preparation Section of "Methods for Measuring the Acute Toxicity of Effluents and Receiving Waters to Freshwater and Marine Organisms, Fifth Edition" (EPA-821-R-02-012), or the most recent update thereof, for every valid and invalid toxicity test initiated. All full reports shall be retained for 3 years at the plant site and shall be available for inspection by TCEQ personnel.

b. A full report must be submitted with the first valid biomonitoring test results for each test species and with the first test results any time the permittee subsequently employs a different test laboratory. Full reports need not be submitted for subsequent testing unless specifically requested. The permittee shall routinely report the results of each biomonitoring test on the Table 2 forms provided with this permit. All Table 2 reports must include the information specified in the Table 2 form attached to this permit.

1) Semiannual biomonitoring test results are due on or before January 20th and July 20th for biomonitoring conducted during the previous 6 month period.

2) Quarterly biomonitoring test results are due on or before January 20th, April 20th, July 20th, and October 20th, for biomonitoring conducted during the previous calendar quarter.

c. Enter the following codes on the DMR for the appropriate parameters for valid tests only:

1) For the water flea, Parameter TIE3D, enter a "0" if the mean survival at 24-hours is greater than 50% in the 100% effluent dilution; if the mean survival is less than or equal to 50%, enter a "1."

2) For the fathead minnow, Parameter TIE6C, enter a "0" if the mean survival at 24-hours is greater than 50% in the 100% effluent dilution; if the mean survival is less than or equal to 50%, enter a "1."

d. Enter the following codes on the DMR for retests only:

1) For retest number 1, Parameter 22415, enter a "0" if the mean survival at 24-hours is greater than 50% in the 100% effluent dilution; if the mean survival is less than or equal to 50%, enter a "1."

2) For retest number 2, Parameter 22416, enter a "0" if the mean survival at 24-hours is greater than 50% in the 100% effluent dilution; if the mean survival is less than or equal to 50%, enter a "1."

4. Persistent Mortality

The requirements of this Part apply when a toxicity test demonstrates significant lethality, here defined as a mean mortality of 50% or greater to organisms exposed to the 100% effluent concentration after 24-hours.

a. The permittee shall conduct 2 additional tests (retests) for each species that demonstrates significant lethality. The two retests shall be conducted once per week for 2 weeks. Five effluent dilution concentrations in addition to an appropriate control shall be used in the retests. These additional effluent concentrations are 6%, 13%, 25%, 50% and 100% effluent. The first retest shall be conducted within 15 days of the laboratory determination of significant lethality. All test results shall be submitted within 20 days of test completion of the second retest. Test completion is defined as the 24th hour. The retests shall also be reported on the DMRs as specified in Part 3.d.

b. If one or both of the two retests specified in item 4.a. demonstrates significant lethality, the permittee shall initiate the TRE requirements as specified in Part 5 of this Section.

5. Toxicity Reduction Evaluation

a. Within 45 days of the retest that demonstrates significant lethality, the permittee shall submit a General Outline for initiating a TRE. The outline shall include, but not be limited to, a description of project personnel, a schedule for obtaining consultants (if needed), a discussion of influent and/or effluent data available for review, a sampling and analytical schedule, and a proposed TRE initiation date.

b. Within 90 days of the retest that demonstrates significant lethality, the permittee shall submit a TRE Action Plan and Schedule for conducting a TRE. The plan shall specify the approach and methodology to be used in performing the TRE. A Toxicity Reduction Evaluation is a step-wise investigation combining toxicity testing with physical and chemical analysis to determine actions necessary to eliminate or reduce effluent toxicity to a level not effecting significant lethality at the critical dilution. The TRE Action Plan shall lead to the successful elimination of significant lethality for both test species defined in item 1.b. As a minimum, the TRE Action Plan shall include the following:

1) Specific Activities - The TRE Action Plan shall specify the approach the permittee intends to utilize in conducting the TRE, including toxicity characterizations, identifications, confirmations, source evaluations, treatability studies, and/or alternative approaches. When conducting characterization analyses, the permittee shall perform multiple characterizations and follow the procedures specified in the document entitled, "Methods for Aquatic Toxicity Identification Evaluations: Phase I Toxicity Characterization Procedures" (EPA/600/6-91/003), or alternate procedures. The permittee shall perform multiple identifications and follow the methods specified in the documents entitled, "Methods for Aquatic Toxicity Identification Evaluations, Phase II Toxicity Identification Procedures for Samples Exhibiting Acute and Chronic Toxicity" (EPA/600/R-92/080) and "Methods for Aquatic Toxicity Identification Evaluations, Phase III Toxicity Confirmation Procedures for Samples Exhibiting Acute and Chronic Toxicity" (EPA/600/R-92/081). All characterization, identification, and confirmation tests shall be conducted in an orderly and logical progression;

2) Sampling Plan - The TRE Action Plan should describe sampling locations, methods, holding times, chain of custody, and preservation techniques. The effluent sample volume collected for all tests shall be adequate to perform the toxicity characterization/ identification/ confirmation procedures, and chemical-specific analyses when the toxicity tests show significant lethality. Where the permittee has identified or suspects specific pollutant(s) and/or source(s) of effluent toxicity, the permittee shall conduct, concurrent with toxicity testing, chemical-specific analyses for the identified and/or suspected pollutant(s) and/or source(s) of effluent toxicity;

3) Quality Assurance Plan - The TRE Action Plan should address record keeping and data evaluation, calibration and standardization, baseline tests, system blanks, controls, duplicates, spikes, toxicity persistence in the samples, randomization, reference toxicant control charts, as well as mechanisms to detect artifactual toxicity; and

4) Project Organization - The TRE Action Plan should describe the project staff, project manager, consulting engineering services (where applicable), consulting analytical and toxicological services, etc.

c. Within 30 days of submittal of the TRE Action Plan and Schedule, the permittee shall implement the TRE with due diligence.

d. The permittee shall submit quarterly TRE Activities Reports concerning the progress of the TRE. The quarterly TRE Activities Reports are due on or before April 20th, July 20th, October 20th, and January 20th. The report shall detail information regarding the TRE activities including:

1) results and interpretation of any chemical-specific analyses for the identified and/or suspected pollutant(s) performed during the quarter;

2) results and interpretation of any characterization, identification, and confirmation tests performed during the quarter;

3) any data and/or substantiating documentation which identifies the pollutant(s) and/or source(s) of effluent toxicity;

4) results of any studies/evaluations concerning the treatability of the facility's effluent toxicity;

5) any data which identifies effluent toxicity control mechanisms that will reduce effluent toxicity to the level necessary to eliminate significant lethality; and

6) any changes to the initial TRE Plan and Schedule that are believed necessary as a result of the TRE findings.

Copies of the TRE Activities Report shall also be submitted to the U.S. EPA Region 6 office.

e. During the TRE, the permittee shall perform, at a minimum, quarterly testing using the more sensitive species; testing for the less sensitive species shall continue at the frequency specified in Part 1.b.

f. If the effluent ceases to effect significant lethality (herein as defined below) the permittee may end the TRE. A "cessation of lethality" is defined as no significant lethality for a period of 12 consecutive weeks with at least weekly testing. At the end of the 12 weeks, the permittee shall submit a statement of intent to cease the TRE and may then resume the testing frequency specified in Part 1.b. The permittee may only apply the "cessation of lethality" provision once.

This provision accommodate situations where operational errors and upsets, spills, or sampling errors triggered the TRE, in contrast to a situation where a single toxicant or group of toxicants cause lethality. This provision does not apply as a result of corrective actions taken by the permittee. "Corrective actions" are herein defined as proactive efforts which eliminate or reduce effluent toxicity. These include, but are not limited to, source reduction or elimination, improved housekeeping, changes in chemical usage, and modifications of influent streams and/or effluent treatment.

The permittee may only apply this cessation of lethality provision once. If the effluent again demonstrates significant lethality to the same species, the permit will be amended to add a WET limit with a compliance period, if appropriate. However, prior to the effective date of the WET limit, the permittee may apply for a permit amendment removing and replacing the WET limit with an alternate toxicity control measure by identifying and confirming the toxicant and/or an appropriate control measure.

g. The permittee shall complete the TRE and submit a Final Report on the TRE Activities no later than 18 months from the last test day of the retest that demonstrates significant lethality. The permittee may petition the Executive Director (in writing) for an extension of the 18-month limit. However, to warrant an extension the permittee must have demonstrated due diligence in their pursuit of the TIE/TRE and must prove that circumstances beyond their control stalled the TIE/TRE. The report shall specify the control mechanism(s) that will, when implemented, reduce effluent toxicity as specified in item 5.g. The report will also specify a corrective action schedule for implementing the selected control mechanism(s). A copy of the TRE Final Report shall also be submitted to the U.S. EPA Region 6 office.

h. Within 3 years of the last day of the test confirming toxicity, the permittee shall comply with 30 TAC 307.6.(e)(2)(B), which requires greater than 50% survival of the test organism in 100% effluent at the end of 24-hours. The permittee may petition the Executive Director (in writing) for an extension of the 3-year limit. However, to warrant an extension the permittee must have demonstrated due diligence in their pursuit of the TIE/TRE and must prove that circumstances beyond their control stalled the TIE/TRE.

   The requirement to comply with 30 TAC 307.6.(e)(2)(B) may be exempted upon proof that toxicity is caused by an excess, imbalance, or deficiency of dissolved salts. This exemption excludes instances where individually toxic components (e.g. metals) form a salt compound. Following the exemption, the permit may be amended to include an ion-adjustment protocol, alternate species testing, or single species testing.

i. Based upon the results of the TRE and proposed corrective actions, this permit may be amended to modify the biomonitoring requirements where necessary, to require a compliance schedule for implementation of corrective actions, to specify a WET limit, to specify a BMP, and/or to specify a CS limit.

TABLE 2 (SHEET 1 OF 2)

WATER FLEA SURVIVAL

GENERAL INFORMATION

	Time (am/pm)	Date
Composite Sample Collected		
Test Initiated		

PERCENT SURVIVAL

Time	Rep	Percent effluent (%)					
		0%	6%	13%	25%	50%	100%
24h	A						
	B						
	C						
	D						
	E						
	MEAN*						

Enter percent effluent corresponding to the LC50 below:

24 hour LC50 = _____% effluent

95% confidence limits: _____

Method of LC50 calculation:_____

*If 24-hour survivorship data from the chronic *Ceriodaphnia dubia* test is being used, the mean survival per dilution for all 10 replicates shall be reported on this row.

TABLE 2 (SHEET 2 OF 2)

FATHEAD MINNOW SURVIVAL

GENERAL INFORMATION

	Time (am/pm)	Date
Composite Sample Collected		
Test Initiated		

PERCENT SURVIVAL

Time	Rep	Percent effluent (%)					
		0%	6%	13%	25%	50%	100%
24h	A						
	B						
	C						
	D						
	E						
	MEAN						

Enter percent effluent corresponding to the LC50 below:

24 hour LC50 = _____% effluent

95% confidence limits: _____

Method of LC50 calculation:_____

Proposed changes have been implemented and new de-chlorination system is sheduled for construction in 2009.

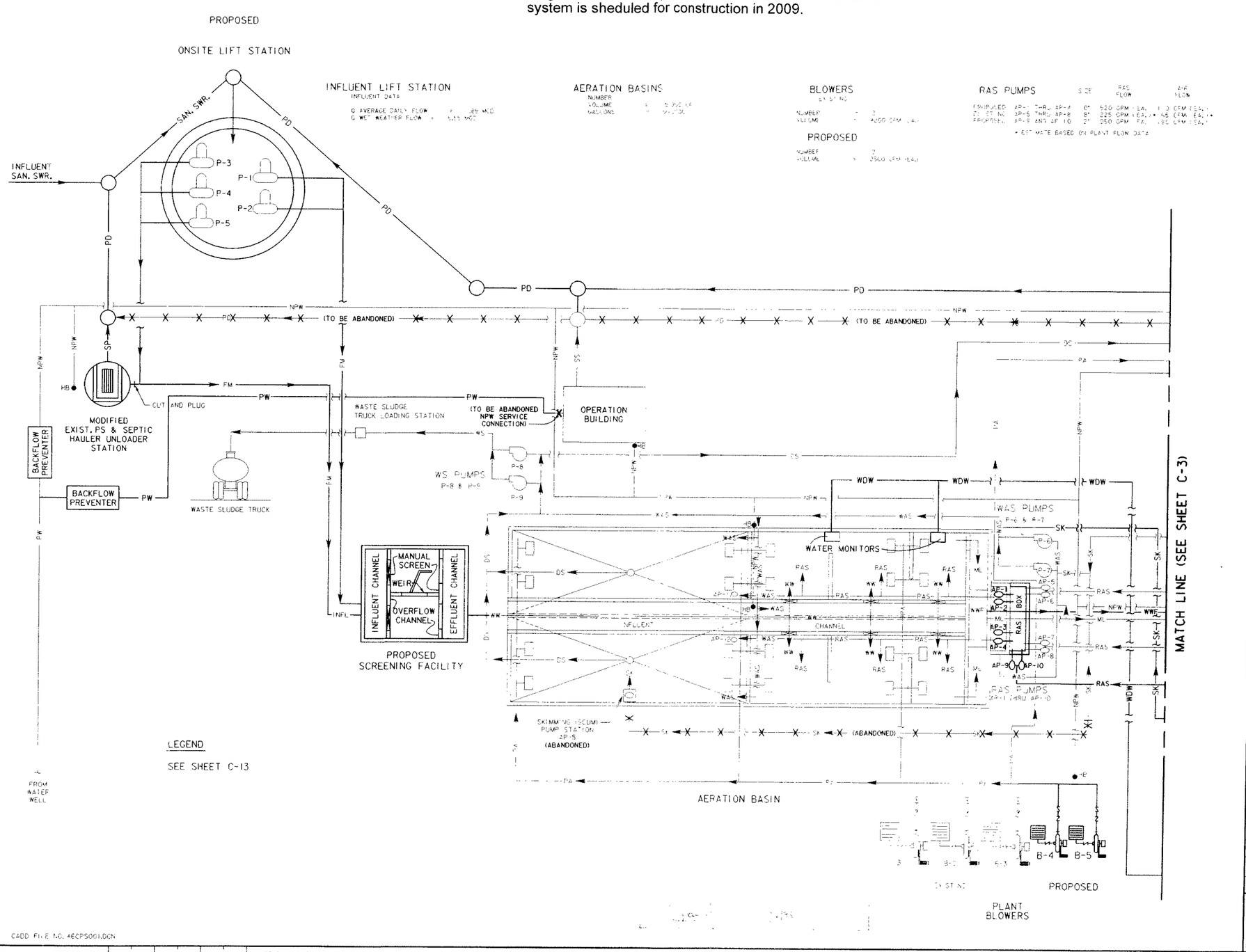

REV. NO.	DESCRIPTION	APP'D	DATE

SEAL

DANNENBAUM ENGINEERING CORPORATION
3100 WEST ALABAMA, HOUSTON, TEXAS 77098 (713) 520-9570

PROJECT NO. 4622-01

CEDAR BAYOU WWTP
LIFT STATION AND SECONDARY CLARIFIER

PLANT PROCESS SCHEMATIC

CITY OF HOUSTON
DEPARTMENT OF PUBLIC WORKS AND ENGINEERING
ENGINEERING, CONSTRUCTION AND REAL ESTATE GROUP

SECTION APPROVALS

WATER ENGINEERING | TRAFFIC AND SIGNAL ENGINEERING
WASTEWATER ENGINEERING | STREET & BRIDGE ENGINEERING
STORM SEWER ENGINEERING | CONSTRUCTION

OTHER DEPARTMENT

PLANNING AND DEVELOPMENT | SPONSOR DEPARTMENT

CITY ENGINEER | DATE
DIRECTOR OF PUBLIC WORKS AND ENGINEERING | DATE

SUBMITTED: AUGUST 99N
SCALE: NONE
DATE: AUGUST 996
SURVEY BY: DEC
F.B. NO: 92698

DESIGNED BY: WGA
DRAWN BY: DEJ, WLT, MAS
SHEET NO. C-2 OF 130 SHEETS
CITY DWG NO: 32502

CADD FILE NO. 46CPS001.DGN

0 1 2 3 ORIGINAL SCALE IN INCHES FOR REDUCED PLANS

SHT. SEQ. NO. OF 46CPS001.DGN

CEDAR BAYOU WWTP

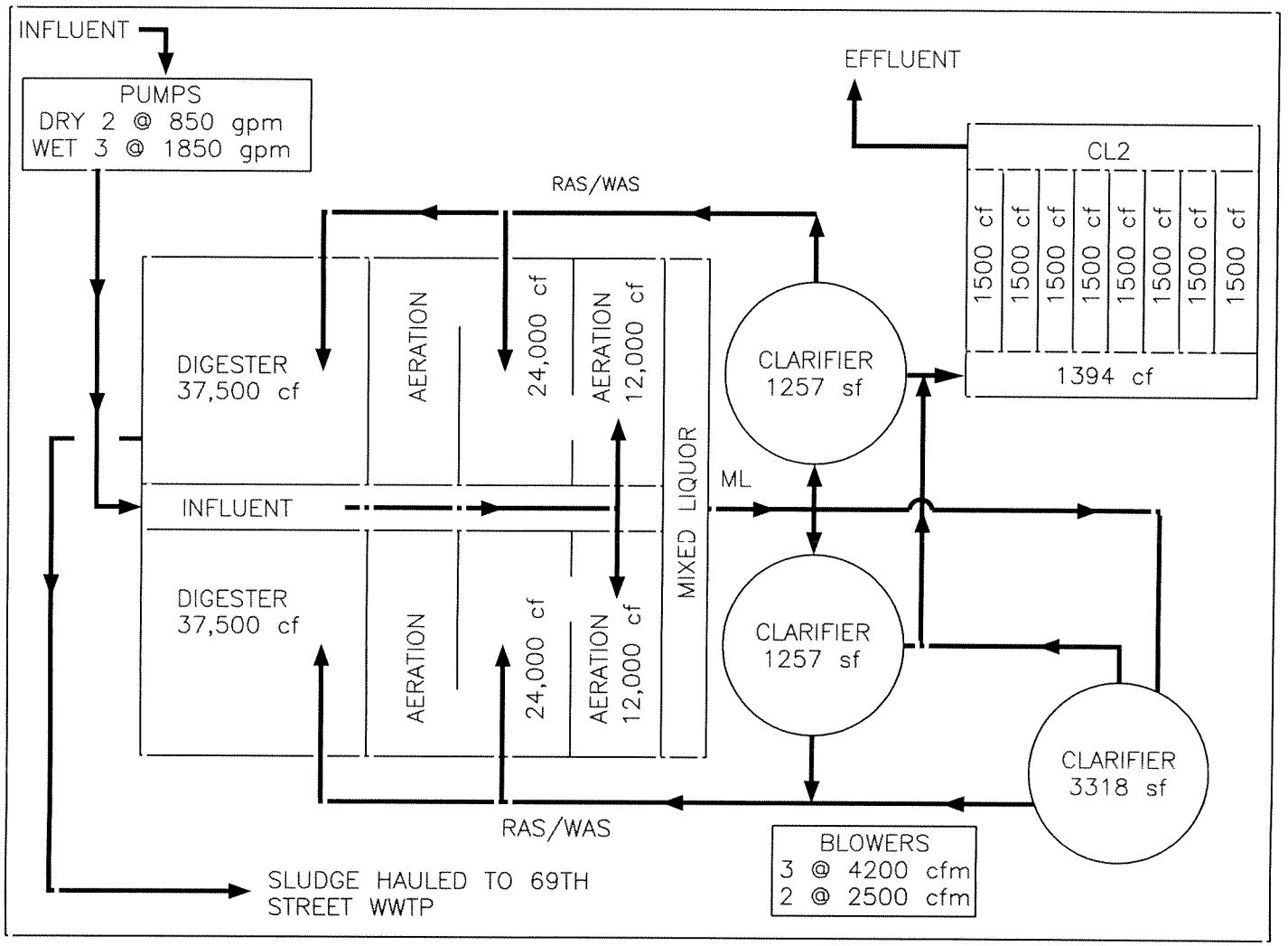

MAJOR UNIT CAPACITIES

Unit		Capacity
Lift Station	(Firm)	7.8 mgd
	(Total)	10.4 mgd
Aeration Basin		1.5 mgd
Blowers	(Firm)	11.6 mgd
	(Total)	15.3 mgd
Secondary Clarifier	(Design)	3.5 mgd
	(2–Hrs peak)	7.0 mgd
Chlorine Contact Chamber		7.2 mgd
PERMITTED FLOW		
Daily Average		0.82 mgd
2 – hours Peak		6.55 mgd

MAY 2005

K:\Projects\Hi1\CityofHoustonPermits\WWTP\Cedar Bayou.dwg

APPENDIX E

DISCHARGE PERMIT AND PROCESS DIAGRAM

WEST LAKE HOUSTON WWTP

FACILITY TO BE ADDED UPON ACCEPTANCE BY THE CITY OF HOUSTON

APPENDIX F

HISTORICAL DATA ELECTRICAL CONSUMPTION (KWH) AT WWTPS

(24 MONTHS)

Date	Kingwood - 1		Kingwood - 2		Kingwood - 3		Forest Cove - 2		Forest Cove - 3		District 58	
	Pumpage (MG)	kWh Usage	Pumpage (MG)	kWh Usage	Pumpage (MG)	kWh Usage	Pumpage (MG)	kWh Usage	Pumpage (MG)	kWh Usage	Pumpage (MG)	kWh Usage
Oct 07	100.106	214,890	99.446	184,288	33.851	56,776	0.000	0	18.578	48,960	0.000	N/A
Nov 07	96.146	205,385	88.664	228,682	16.949	171,320	0.000	160	17.477	43,360	0.000	N/A
Dec 07	96.793	208,263	59.013	136,525	4.909	58,304	0.000	0	19.797	45,760	0.000	N/A
Jan 08	101.314	155,429	35.540	108,547	15.677	55,576	0.000	0	21.488	44,320	0.086	N/A
Feb 08	91.145	323,445	35.255	58,226	11.612	43,344	0.000	0	20.586	47,680	0.000	N/A
Mar 08	76.418	191,319	68.429	98,652	38.578	52,728	0.000	0	21.866	51,040	0.044	N/A
Apr 08	71.125	152,399	61.389	135,225	110.928	213,984	0.000	0	21.467	52,160	0.000	N/A
May 08	79.195	168,900	70.386	116,624	109.653	200,952	0.054	160	24.871	54,888	0.178	N/A
Jun 08	91.234	207,373	89.872	172,481	110.890	289,520	0.000	320	23.960	59,520	0.000	N/A
Jul 08	96.698	231,922	103.516	206,934	124.173	288,992	0.000	0	20.258	61,440	0.008	N/A
Aug 08	82.110	209,262	77.809	166,336	104.895	187,408	0.000	0	25.764	46,240	0.000	N/A
Sep 08	12.505	841	138.251	158,680	76.779	172,632	0.000	0	23.538	45,600	N/A	N/A
Oct 08	20.277	989	64.085	242,798	95.372	138,792	0.000	0	23.259	71,840	N/A	N/A
Nov 08	81.407	808	36.996	190,656	80.791	8,256	0.000	0	23.208	108,960	0.428	N/A
Dec 08	76.755	394,962	8.341	311	78.795	188,264	0.000	0	24.672	92,000	0.570	N/A
Jan 09	80.681	459,534	21.727	162,790	68.944	187,880	0.155	320	22.064	186,560	0.000	N/A
Feb 09	70.774	67,008	53.753	159	41.467	58,464	0.124	160	21.805	58,560	0.000	N/A
Mar 09	88.430	199,167	29.386	47,487	80.216	168,360	0.000	0	25.266	53,600	0.000	N/A
Apr 09	70.685	138,432	33.292	62,695	73.322	177,104	0.009	960	20.736	67,200	N/A	N/A
May 09	71.376	38,735	65.315	127,852	88.140	180,128	0.000	320	21.948	50,720	N/A	N/A
Jun 09	69.736	555,569	122.635	153,787	126.437	300,864	0.002	320	27.117	55,360	N/A	N/A
Jul 09	119.467	238,878	130.997	225,959	122.829	303,656	0.196	0	26.169	68,320	0.000	N/A
Aug 09	130.223	234,085	73.411	367,870	118.138	479,872	0.045	1,441	27.431	65,920	1.067	N/A
Sep 09	54.032	218,469	119.127	244,848	57.310	234,048	0.000	160	22.752	62,400	N/A	N/A

Date	Belleau Woods - 2		Moonshine Hills	
	Pumpage (MG)	kWh Usage	Pumpage (MG)	kWh Usage
Oct 07	0.281	2,600		2,304
Nov 07	0.147	2,520		0
Dec 07	0.048	2,760		0
Jan 08	0.192	4,000		15,264
Feb 08	0.054	0		9,120
Mar 08	0.415	6,480		6,816
Apr 08	0.260	2,360		4,128
May 08	0.640	4,040		3,456
Jun 08	0.002	2,000		3,840
Jul 08	0.000	1,440		3,744
Aug 08	0.000	1,560		5,856
Sep 08	0.703	1,400		5,376
Oct 08	0.740	0		2,208
Nov 08	1.501	0		4,512
Dec 08	0.138	21,160		6,336
Jan 09	1.215	6,240		8,640
Feb 09	0.067	4,000		0
Mar 09	0.026	2,120		5,088
Apr 09	0.060	2,480		5,280
May 09	0.037	2,360		4,416
Jun 09	0.021	0		3,840
Jul 09	0.115	10,440		0
Aug 09	0.072	1,720		24,192
Sep 09	0.019	2,000		6,528

Date	District 73-1		District 73-2	
	Pumpage (MG)	kWh Usage	Pumpage (MG)	kWh Usage
Oct 07	14.671	20,640	0.007	0
Nov 07	13.890	33,920	0.394	2,080
Dec 07	13.276	33,120	1.317	3,680
Jan 08	13.968	6,000	0.000	28,416
Feb 08	0.706	33,400	10.282	0
Mar 08	7.348	11,200	4.625	4,640
Apr 08	1.576	24,320	8.504	32,160
May 08	10.390	13,120	0.000	19,360
Jun 08	20.881	9,760	0.000	42,240
Jul 08	16.563	0	0.000	0
Aug 08	16.111	0	0.000	0
Sep 08	12.472	33,760	0.000	1,440
Oct 08	12.806	57,920	0.539	480
Nov 08	11.635	0	0.333	0
Dec 08	11.585	36,640	0.122	5,120
Jan 09	5.375	37,760	6.472	2,080
Feb 09	7.548	21,920	2.659	14,080
Mar 09	1.694	2,160	8.698	10,880
Apr 09	0.505	12,480	12.351	22,880
May 09	0.013	5,920	13.238	32,800
Jun 09	0.850	5,440	13.844	31,360
Jul 09	0.480	5,600	17.183	35,680
Aug 09	1.152	8,160	12.164	46,080
Sep 09	0.776	8,320	10.842	32,960

Date	District 82		Plantation Hills	
	Pumpage (MG)	kWh Usage	Pumpage (MG)	kWh Usage
Oct 07	0.000	0	0.742	11,616
Nov 07	0.000	0	0.675	12,768
Dec 07	0.000	0	0.809	0
Jan 08	0.000	58,752	0.879	12,096
Feb 08	0.000	0	0.808	13,824
Mar 08	0.000	0	1.684	12,672
Apr 08	0.000	600	1.355	7,008
May 08	0.000	0	1.122	7,392
Jun 08	0.000	0	1.008	10,464
Jul 08	0.000	0	1.253	7,872
Aug 08	0.000	0	1.950	5,760
Sep 08	0.000	0	1.828	3,840
Oct 08	0.000	0	1.156	8,640
Nov 08	0.000	0	0.952	2,304
Dec 08	0.000	0	2.739	5,952
Jan 09	0.000	600	1.628	20,160
Feb 09	0.000	0	0.999	16,320
Mar 09	0.000	0	1.045	12,768
Apr 09	0.000	0	0.996	9,216
May 09	0.000	0	1.149	6,432
Jun 09	0.000	0	1.804	7,392
Jul 09	0.000	0	1.433	15,552
Aug 09	0.000	0	1.421	7,872
Sep 09	0.000	0	1.287	6,720

Date	Lake Houston	
	Pumpage (MG)	kWh Usage
Oct 07	0.314	N/A
Nov 07	0.087	N/A
Dec 07	0.942	N/A
Jan 08	0.161	N/A
Feb 08	0.230	N/A
Mar 08	0.332	N/A
Apr 08	0.209	N/A
May 08	0.236	N/A
Jun 08	0.213	N/A
Jul 08	0.540	N/A
Aug 08	0.517	N/A
Sep 08	1.079	N/A
Oct 08	0.559	N/A
Nov 08	0.865	N/A
Dec 08	0.928	N/A
Jan 09	0.531	N/A
Feb 09	0.477	N/A
Mar 09	0.454	N/A
Apr 09	0.142	N/A
May 09	0.359	N/A
Jun 09	0.382	N/A
Jul 09	0.425	N/A
Aug 09	0.272	N/A
Sep 09	0.333	N/A

Entergy

Summary Account Number: **2562127**

Statement For: SEPTEMBER, 2009

Mail Date: 09/10/09

Detail Bill

Account Number	Office	Cycle	Route
3407071	033	03	39

Customer Name and Service Location

CITY OF HOUSTON
26808 SORTERS RD A
PORTER TX 77365

Amount Billed	$721.47 *

Billing Period	Days
07/29/09 TO 08/28/09	30

Bill History	Current Month	Last Year
KWH	12000	0
KW	45.0	.0
Days	30	0

Meter Type	Meter Number	Meter Reading Present	Meter Reading Previous	Difference	Multiplier	Usage	Rate Code	Rider Code	Amount
KWH	9422521	13	5	8	1500	12000	220		
KW	9422521	.03			1500	45			
CONTRACT POWER KW		60	08/2009						
BILLED KW		45							
CUSTOMER CHARGE									37.15
DEMAND CHARGE									
45 KW		@	$4.310000						193.95
ENERGY CHARGE									
12000 KWH		@	$.020030						240.36
TTC RIDER			12000 KWH @ $0.0011000						13.20
ENERGY EFFICIENCY COST RECOVERY									7.22
RATE CASE EXPENSE									1.97
FUEL ADJUSTMENT			12000 KWH @ $0.0477680						573.22
PRODUCTION COST ADJUSTMENT			12000 KWH @ $0.0163300-						195.96
FUEL REFUND			12000 KWH @ $0.0150300-						180.36
HURRICANE RECONSTRUCTION COST			12000 KWH @ $0.0025600						30.72
TOTAL MONTHLY CHARGES									721.47

PLEASE NOTE: THE HURRICANE RECONSTRUCTION COST RIDER IS NOT SUBJECT TO SALES TAX.

Entergy

Summary Account Number: **2562127**

Statement For: SEPTEMBER, 2009

Mail Date: 09/10/09

Detail Bill

Account Number	Office	Cycle	Route
3407084	033	03	39

Customer Name and Service Location

CITY OF HOUSTON
26808 SORTERS RD B
PORTER TX 77365

Amount Billed	$8,443.84 *

Billing Period	Days
07/29/09 TO 08/28/09	30

Bill History	Current Month	Last Year
KWH	172500	0
KW	315.0	.0
Days	30	0

Meter Type	Meter Number	Meter Reading Present	Meter Reading Previous	Difference	Multiplier	Usage	Rate Code	Rider Code	Amount
KWH	9423667	292	177	115	1500	172500	220		
KW	9423667	.21			1500	315			
CONTRACT POWER KW		315	09/2009						
BILLED KW		315							
CUSTOMER CHARGE									37.15
DEMAND CHARGE									
315 KW		@ $4.310000							1,357.65
ENERGY CHARGE									
172500 KWH		@ $.020030							3,455.18
TTC RIDER		172500 KWH @ $0.0011000							189.75
ENERGY EFFICIENCY COST RECOVERY									103.85
RATE CASE EXPENSE									28.29
FUEL ADJUSTMENT		172500 KWH @ $0.0477680							8,239.98
PRODUCTION COST ADJUSTMENT		172500 KWH @ $0.0163300-							2,816.93
FUEL REFUND		172500 KWH @ $0.0150300-							2,592.68
HURRICANE RECONSTRUCTION COST		172500 KWH @ $0.0025600							441.60
TOTAL MONTHLY CHARGES									8,443.84

PLEASE NOTE: THE HURRICANE RECONSTRUCTION COST RIDER IS NOT SUBJECT TO SALES TAX.

Entergy

Summary Account Number: **2562127**

Statement For: AUGUST, 2009

Mail Date: 08/11/09

Detail Bill

Account Number	Office	Cycle	Route
3407071	033	03	39

Customer Name and Service Location

CITY OF HOUSTON
26808 SORTERS RD A
PORTER TX 77365

Amount Billed	$584.95 *

Billing Period	Days
06/30/09 TO 07/29/09	29

Bill History	Current Month	Last Year
KWH	7500	0
KW	60.0	.0
Days	29	0

Meter Type	Meter Number	Meter Reading Present	Meter Reading Previous	Difference	Multiplier	Usage	Rate Code	Rider Code	Amount
KWH	9422521	5	0	5	1500	7500	220		
KW	9422521	.04			1500	60			
CONTRACT POWER KW		60	08/2009						
BILLED KW		60							
CUSTOMER CHARGE									37.15
DEMAND CHARGE									
60 KW		@	$4.310000						258.60
ENERGY CHARGE									
7500 KWH		@	$.020030						150.23
TTC RIDER			7500 KWH @ $0.0011000						8.25
ENERGY EFFICIENCY COST RECOVERY									4.52
RATE CASE EXPENSE									1.23
FUEL ADJUSTMENT			7500 KWH @ $0.0443634						332.73
PRODUCTION COST ADJUSTMENT			7500 KWH @ $0.0152300-						114.23
FUEL REFUND			7500 KWH @ $0.0150300-						112.73
HURRICANE RECONSTRUCTION COST			7500 KWH @ $0.0025600						19.20
TOTAL MONTHLY CHARGES									584.95

PLEASE NOTE: THE HURRICANE RECONSTRUCTION COST RIDER IS NOT SUBJECT TO SALES TAX.

Entergy

Summary Account Number: **2562127**

Statement For: AUGUST, 2009

Mail Date: 08/11/09

Detail Bill

Account Number	Office	Cycle	Route
3407084	033	03	39

Customer Name and Service Location

CITY OF HOUSTON
26808 SORTERS RD B
PORTER TX 77365

Amount Billed	$7,222.93 *

Billing Period	Days
06/30/09 TO 07/29/09	29

Bill History	Current Month	Last Year
KWH	154500	0
KW	285.0	.0
Days	29	0

Meter Type	Meter Number	Meter Reading Present	Meter Reading Previous	Difference	Multiplier	Usage	Rate Code	Rider Code	Amount
KWH	9423667	177	74	103	1500	154500	220		
KW	9423667	.19			1500	285			
CONTRACT POWER KW		285	08/2009						
BILLED KW		285							
CUSTOMER CHARGE									37.15
DEMAND CHARGE									
285 KW		@ $4.310000							1,228.35
ENERGY CHARGE									
154500 KWH		@ $.020030							3,094.64
TTC RIDER		154500 KWH @ $0.0011000							169.95
ENERGY EFFICIENCY COST RECOVERY									93.01
RATE CASE EXPENSE									25.34
FUEL ADJUSTMENT		154500 KWH @ $0.0443634							6,854.15
PRODUCTION COST ADJUSTMENT		154500 KWH @ $0.0152300-							2,353.04
FUEL REFUND		154500 KWH @ $0.0150300-							2,322.14
HURRICANE RECONSTRUCTION COST		154500 KWH @ $0.0025600							395.52
TOTAL MONTHLY CHARGES									7,222.93

PLEASE NOTE: THE HURRICANE RECONSTRUCTION COST RIDER IS NOT SUBJECT TO SALES TAX.

Entergy

Summary Account Number: **2562127**

Statement For: AUGUST, 2009

Mail Date: 08/11/09

Detail Bill

Account Number	Office	Cycle	Route
3407071	033	03	39

Customer Name and Service Location

CITY OF HOUSTON
26808 SORTERS RD A
PORTER TX 77365

Amount Billed	$584.95 *

Billing Period	Days
06/30/09 TO 07/29/09	29

Bill History	Current Month	Last Year
KWH	7500	0
KW	60.0	.0
Days	29	0

Meter Type	Meter Number	Meter Reading Present	Meter Reading Previous	Difference	Multiplier	Usage	Rate Code	Rider Code	Amount
KWH	9422521	5	0	5	1500	7500	220		
KW	9422521	.04			1500	60			
CONTRACT POWER KW		60	08/2009						
BILLED KW		60							
CUSTOMER CHARGE									37.15
DEMAND CHARGE									
60 KW		@	$4.310000						258.60
ENERGY CHARGE									
7500 KWH		@	$.020030						150.23
TTC RIDER			7500 KWH @ $0.0011000						8.25
ENERGY EFFICIENCY COST RECOVERY									4.52
RATE CASE EXPENSE									1.23
FUEL ADJUSTMENT			7500 KWH @ $0.0443634						332.73
PRODUCTION COST ADJUSTMENT			7500 KWH @ $0.0152300-						114.23
FUEL REFUND			7500 KWH @ $0.0150300-						112.73
HURRICANE RECONSTRUCTION COST			7500 KWH @ $0.0025600						19.20
TOTAL MONTHLY CHARGES									584.95

PLEASE NOTE: THE HURRICANE RECONSTRUCTION COST RIDER IS NOT SUBJECT TO SALES TAX.

Entergy

Summary Account Number: **2562127**

Statement For: AUGUST, 2009

Mail Date: 08/11/09

Detail Bill

Account Number	Office	Cycle	Route
3407084	033	03	39

Customer Name and Service Location

CITY OF HOUSTON
26808 SORTERS RD B
PORTER TX 77365

Amount Billed	$7,222.93 *

Billing Period	Days
06/30/09 TO 07/29/09	29

Bill History	Current Month	Last Year
KWH	154500	0
KW	285.0	.0
Days	29	0

Meter Type	Meter Number	Meter Reading Present	Meter Reading Previous	Difference	Multiplier	Usage	Rate Code	Rider Code	Amount
KWH	9423667	177	74	103	1500	154500	220		
KW	9423667	.19			1500	285			
CONTRACT POWER KW		285	08/2009						
BILLED KW		285							
CUSTOMER CHARGE									37.15
DEMAND CHARGE									
285 KW			@ $4.310000						1,228.35
ENERGY CHARGE									
154500 KWH			@ $.020030						3,094.64
TTC RIDER			154500 KWH @ $0.0011000						169.95
ENERGY EFFICIENCY COST RECOVERY									93.01
RATE CASE EXPENSE									25.34
FUEL ADJUSTMENT			154500 KWH @ $0.0443634						6,854.15
PRODUCTION COST ADJUSTMENT			154500 KWH @ $0.0152300-						2,353.04
FUEL REFUND			154500 KWH @ $0.0150300-						2,322.14
HURRICANE RECONSTRUCTION COST			154500 KWH @ $0.0025600						395.52
TOTAL MONTHLY CHARGES									7,222.93

PLEASE NOTE: THE HURRICANE RECONSTRUCTION COST RIDER IS NOT SUBJECT TO SALES TAX.

Entergy

Summary Account Number: **2562127**

Statement For: AUGUST, 2009

Mail Date: 08/11/09

Detail Bill

Account Number	Office	Cycle	Route
3407084	033	03	39

Customer Name and Service Location

CITY OF HOUSTON
26808 SORTERS RD B
PORTER TX 77365

Amount Billed	$7,222.93 *

Billing Period	Days
06/30/09 TO 07/29/09	29

Bill History	Current Month	Last Year
KWH	154500	0
KW	285.0	.0
Days	29	0

Meter Type	Meter Number	Meter Reading Present	Meter Reading Previous	Difference	Multiplier	Usage	Rate Code	Rider Code	Amount
KWH	9423667	177	74	103	1500	154500	220		
KW	9423667	.19			1500	285			
CONTRACT POWER KW		285	08/2009						
BILLED KW		285							
CUSTOMER CHARGE									37.15
DEMAND CHARGE									
285 KW		@ $4.310000							1,228.35
ENERGY CHARGE									
154500 KWH		@ $.020030							3,094.64
TTC RIDER		154500 KWH @ $0.0011000							169.95
ENERGY EFFICIENCY COST RECOVERY									93.01
RATE CASE EXPENSE									25.34
FUEL ADJUSTMENT		154500 KWH @ $0.0443634							6,854.15
PRODUCTION COST ADJUSTMENT		154500 KWH @ $0.0152300-							2,353.04
FUEL REFUND		154500 KWH @ $0.0150300-							2,322.14
HURRICANE RECONSTRUCTION COST		154500 KWH @ $0.0025600							395.52
TOTAL MONTHLY CHARGES									7,222.93

PLEASE NOTE: THE HURRICANE RECONSTRUCTION COST RIDER IS NOT SUBJECT TO SALES TAX.

Entergy

Summary Account Number: **2562127**
Statement For: JULY, 2009
Mail Date: 07/13/09

Detail Bill

Account Number	Office	Cycle	Route
3407071	033	03	39

Customer Name and Service Location

CITY OF HOUSTON
26808 SORTERS RD A
PORTER TX 77365

Amount Billed	$58.70 *

Billing Period	Days
05/28/09 TO 06/30/09	33

Bill History	Current Month	Last Year
KWH	0	0
KW	5.0	.0
Days	33	0

Meter Type	Meter Number	Meter Reading Present	Meter Reading Previous	Difference	Multiplier	Usage	Rate Code	Rider Code	Amount
KWH	9422521	0	0	0	1500	0	220		
KW	9422521	.00			1500	0			
BILLED MINIMUM KW		5							
CUSTOMER CHARGE									37.15
DEMAND CHARGE									
5 KW		@	$4.310000						21.55
TOTAL MONTHLY CHARGES									58.70

Entergy

Summary Account Number: **2562127**

Statement For: JULY, 2009

Mail Date: 07/13/09

Detail Bill

Account Number	Office	Cycle	Route
3407084	033	03	39

Customer Name and Service Location

CITY OF HOUSTON
26808 SORTERS RD B
PORTER TX 77365

Amount Billed	$5,847.43 *

Billing Period	Days
05/28/09 TO 06/30/09	33

Bill History	Current Month	Last Year
KWH	96000	0
KW	150.0	.0
Days	33	0

Meter Type	Meter Number	Meter Reading Present	Meter Reading Previous	Difference	Multiplier	Usage	Rate Code	Rider Code	Amount
KWH	9423667	74	10	64	1500	96000	220		
KW	9423667	.10			1500	150			
CONTRACT POWER KW		150	07/2009						
BILLED KW		150							
CUSTOMER CHARGE									37.15
DEMAND CHARGE									
150 KW		@ $4.310000							646.50
ENERGY CHARGE									
96000 KWH		@ $.020030							1,922.88
TTC RIDER			96000 KWH @ $0.0011000						105.60
ENERGY EFFICIENCY COST RECOVERY									57.79
RATE CASE EXPENSE									15.74
FUEL ADJUSTMENT			96000 KWH @ $0.0443634						4,258.89
FUEL REFUND			96000 KWH @ $0.0150300-						1,442.88
HURRICANE RECONSTRUCTION COST			96000 KWH @ $0.0025600						245.76
TOTAL MONTHLY CHARGES									5,847.43

PLEASE NOTE: THE HURRICANE RECONSTRUCTION COST RIDER IS NOT SUBJECT TO SALES TAX.

Entergy

Summary Account Number: **2562127**

Statement For: JUNE, 2009

Mail Date: 06/11/09

Detail Bill

Account Number	Office	Cycle	Route
3407071	033	03	39

Customer Name and Service Location

CITY OF HOUSTON
26808 SORTERS RD A
PORTER TX 77365

Amount Billed	$2,240.68 *

Billing Period	Days
05/01/09 TO 05/28/09	27

Bill History	Current Month	Last Year
KWH	0	0
KW	5.0	.0
Days	27	0

Meter Type	Meter Number	Meter Reading Present	Meter Reading Previous	Difference	Multiplier	Usage	Rate Code	Rider Code	Amount
KWH	9422521	0	0	0	1500	0	220		
KW	9422521	.00			1500	0			
BILLED MINIMUM KW		5							
CUSTOMER CHARGE									37.15
DEMAND CHARGE									
5 KW		@	$4.310000						21.55
TOTAL MONTHLY CHARGES									58.70
FOR PREVIOUS CONSUMPTION									2,163.98
CUSTOMER CONNECT CHARGE									18.00

40005-8300

Entergy

Summary Account Number: **2562127**

Statement For: JUNE, 2009

Mail Date: 06/11/09

Detail Bill

Account Number	Office	Cycle	Route
3407084	033	03	39

Customer Name and Service Location

CITY OF HOUSTON
26808 SORTERS RD B
PORTER TX 77365

Amount Billed	$1,476.99 *

Billing Period	Days
05/01/09 TO 05/28/09	27

Bill History	Current Month	Last Year
KWH	15000	0
KW	90.0	.0
Days	27	0

Meter Type	Meter Number	Meter Reading Present	Meter Reading Previous	Difference	Multiplier	Usage	Rate Code	Rider Code	Amount
KWH	9423667	10	0	10	1500	15000	220		
KW	9423667	.06			1500	90			
CONTRACT POWER KW		90	06/2009						
BILLED KW		90							
CUSTOMER CHARGE									37.15
DEMAND CHARGE									
90 KW		@	$4.310000						387.90
ENERGY CHARGE									
15000 KWH		@	$.020030						300.45
TTC RIDER			15000 KWH @ $0.0011000						16.50
ENERGY EFFICIENCY COST RECOVERY									9.03
RATE CASE EXPENSE									2.46
FUEL ADJUSTMENT			15000 KWH @ $0.0443634						665.45
HURRICANE RECONSTRUCTION COST			15000 KWH @ $0.0026700						40.05
TOTAL MONTHLY CHARGES									1,458.99
CUSTOMER CONNECT CHARGE									18.00

PLEASE NOTE: THE HURRICANE RECONSTRUCTION COST RIDER IS NOT SUBJECT TO SALES TAX.

40005 - 8300

Entergy

Summary Account Number: **2562127**

Statement For: AUGUST, 2009

Mail Date: 08/11/09

Detail Bill

Account Number	Office	Cycle	Route
3407084	033	03	39

Customer Name and Service Location

CITY OF HOUSTON
26808 SORTERS RD B
PORTER TX 77365

Amount Billed	$7,222.93 *

Billing Period	Days
06/30/09 TO 07/29/09	29

Bill History	Current Month	Last Year
KWH	154500	0
KW	285.0	.0
Days	29	0

Meter Type	Meter Number	Meter Reading Present	Meter Reading Previous	Difference	Multiplier	Usage	Rate Code	Rider Code	Amount
KWH	9423667	177	74	103	1500	154500	220		
KW	9423667	.19			1500	285			
CONTRACT POWER KW		285	08/2009						
BILLED KW		285							
CUSTOMER CHARGE									37.15
DEMAND CHARGE									
285 KW		@ $4.310000							1,228.35
ENERGY CHARGE									
154500 KWH		@ $.020030							3,094.64
TTC RIDER		154500 KWH @ $0.0011000							169.95
ENERGY EFFICIENCY COST RECOVERY									93.01
RATE CASE EXPENSE									25.34
FUEL ADJUSTMENT		154500 KWH @ $0.0443634							6,854.15
PRODUCTION COST ADJUSTMENT		154500 KWH @ $0.0152300-							2,353.04
FUEL REFUND		154500 KWH @ $0.0150300-							2,322.14
HURRICANE RECONSTRUCTION COST		154500 KWH @ $0.0025600							395.52
TOTAL MONTHLY CHARGES									7,222.93

PLEASE NOTE: THE HURRICANE RECONSTRUCTION COST RIDER IS NOT SUBJECT TO SALES TAX.

APPENDIX G

HISTORICAL DATA SLUDGE PRODUCED/DISPOSED/TRANSPORTED AT WWTPS

(24 MONTHS)

City Waste: Kingwood STP
Sludge Disposal Aug 08-July 09

Hauler ID#23468

MONTH	# OF LOAD	CUBIC YARDS	TS%	GALLONS	DRY TONS	METRIC TONS
August-08	38	950	29.4	191875	235.24	213
September-08	49	1225	29.4	247418	303.33	275
October-08	67	1675	32.6	338306	459.90	417
November-08	33	825	32.6	166629	226.52	205
December-08	32	800	31	161579	208.87	189
January-09	122	3050	31	616021	796.33	722
February-09	102	2550	36	515034	773.17	701
March-09	92	2300	36	464540	697.37	633
April-09	77	1925	35.4	388800	573.94	521
May-09	100	2500	35.4	504935	745.37	676
June-09	41	1025	34.1	207023	294.38	267
July-09	66	1650	34.1	333257	473.88	430
TOTAL	**819**	**20475**			**5788.30**	**5251**

Magna Flow Environmental

History of Haul & Disposal of Sludge Transfers

August 2008 –July 2009

WWTP: Kingwood West
Permit State: Texas
Permit No: 10495-142
Disposal Site: Kingwood WWTP
Disposal Site Permit No: 10495-146

Billed To: Severn Trent
16337 Park Row
Houston, Tx 77084

Date	Invoice	Unit	Qty	Location of Disposal	Type	TCEQ Permit Number	Metric Dry Tons	Transporter No
August	19078	Gal	105,000	Kingwood	WWTP	10495-146	11.96	21484
October	19385	Gal	70,000	Kingwood	WWTP	10495-146	7.97	21484
November	19565	Gal	105,000	Kingwood	WWTP	10495-146	11.96	21484
December	19826	Gal	56,000	Kingwood	WWTP	10495-146	6.38	21484
January	19991	Gal	42,000	Kingwood	WWTP	10495-146	4.78	21484
March	20218	Gal	105,000	Kingwood	WWTP	10495-146	11.96	21484
March	20339	Gal	105,000	Kingwood	WWTP	10495-146	11.96	21484
April	20470	Gal	105,000	Kingwood	WWTP	10495-146	11.96	21484
May	20744	Gal	98,000	Kingwood	WWTP	10495-146	11.16	21484
June	20889	Gal	105,000	Kingwood	WWTP	10495-146	11.96	21484
			896,000				102.05	

Magna Flow Environmental

History of Haul & Disposal of Sludge Transfers

August 2008 –July 2009

WWTP: Forest Cove
Permit State: Texas
Permit No: 10495-149
Disposal Site: Kingwood WWTP
Disposal Site Permit No: 10495-146

Billed To: Severn Trent
16337 Park Row
Houston, Tx 77084

Date	Invoice	Unit	Qty	Location of Disposal	Type	TCEQ Permit Number	Metric Dry Tons	Transporter No
March	20312	Gal	105,000	Kingwood	WWTP	10495-146	11.96	21484
June	20840	Gal	105,000	Kingwood	WWTP	10495-146	11.96	21484
			210,000				23.92	

History of Haul & Disposal of Sludge
Annual
August 2007 --July 2008

WWTP: **Forest Cove**
Permit State: **Texas**
Permit No: **10495-142**
Disposal Site: **Kingwood WWTP**
Disposal Site Permit No: 10495-146

Billed To: **Severn Trent**
16337 Park Row
Houston, Tx 77084

Date	Invoice	Unit	Qty	Location of Disposal	Type	TCEQ Permit Number	Metric Dry Tons	Transporter No
September	17514	Gal	112,000	Kingwood	WWTP	10495-146	14.08	21484
January	17999	Gal	105,000	Kingwood	WWTP	10495-146	12.06	21484
April	18469	Gal	105,000	Kingwood	WWTP	10495-146	11.96	21484
July	18966	Gal	105,000	Kingwood	WWTP	10495-146	11.96	21484
		Gal			WWTP			21484
			427,000				50.06	

History of Haul & Disposal of Sludge
Annual
August 2007 --July 2008

WWTP: Kingwood West
Permit State: Texas
Permit No: 10495-142
Disposal Site: Kingwood WWTP
Disposal Site Permit No: 10495-146

Billed To: Severn Trent
16337 Park Row
Houston, Tx 77084

Date	Invoice	Unit	Qty	Location of Disposal	Type	TCEQ Permit Number	Metric Dry Tons	Transporter No
September	17515	Gal	91,000	Kingwood	WWTP	10495-146	11.05	21484
October	17631	Gal	112,000	Kingwood	WWTP	10495-146	14.04	21484
November	17771	Gal	105,000	Kingwood	WWTP	10495-146	12.86	21484
January	18067	Gal	119,000	Kingwood	WWTP	10495-146	13.57	21484
February	18225	Gal	105,000	Kingwood	WWTP	10495-146	11.98	21484
March	18394	Gal	14,000	Kingwood	WWTP	10495-146	1.6	21484
April	18394	Gal	91,000	Kingwood	WWTP	10495-146	10.37	21484
April	18747	Gal	98,000	Kingwood	WWTP	10495-146	11.16	21484
May	18633	Gal	105,000	Kingwood	WWTP	10495-146	11.96	21484
June	18829	Gal	70,000	Kingwood	WWTP	10495-146	7.97	21484
July	18839	Gal	35,000	Kingwood	WWTP	10495-146	3.99	21484
			945,000				110.55	

City Waste: Kingwood STP Hauler ID#23468
Sludge Disposal Aug 07-July 08

MONTH	# OF LOAD	CUBIC YARDS	TS%	GALLONS	DRY TONS	METRIC TONS
August-07	59	1475	32.7	297912	406.23	**369**
September-07	56	1400	32.7	282764	385.57	**350**
October-07	66	1650	34.6	333257	480.83	**436**
November-07	59	1475	34.6	297912	429.83	**390**
December-07	49	1225	31.6	247418	326.03	**296**
January-08	77	1925	38.3	388800	620.96	**563**
February-08	87	2175	38.3	439293	701.60	**636**
March-08	62	1550	32.1	313060	419.05	**380**
April-08	65	1625	32.1	328208	439.33	**399**
May-08	72	1800	32.3	363553	489.67	**444**
June-08	68	1700	32.3	343356	462.47	**420**
July-08	67	1675	32	338306	451.44	**410**
TOTAL	**787**	**19675**			**5613.01**	**5092**

APPENDIX H

HISTORICAL DATA CHEMICALS UTILIZED AT WWTPS

(24 MONTHS)

Kingwood Central WWTP					
No.	Invoice No.	Date	Descrip	Quantity	Unit
	COH153	15-Sep-09			
1			Sulfamic	88.00	BG
3			Lime	26.59	T
4			Lime	26.64	T
5			Lime	26.70	T
	COH152	10-Aug-09			
1			Lime	25.410	T
2			Clarifloc	450.00	LBS
3			Clarifloc	900.00	LBS
4			Lime	26.390	T
5			Lime	24.400	T
6			Clarifloc	2700.00	LBS
	COH151	13-Jul-09			
1			Clarifloc	1350	LBS
2			Lime	24.580	T
3			Sulfamic	88.00	BG
5			Lime	26.56	T
	COH150	9-Jun-09			
1			Lime	26.49	T
2			Lime	26.46	T
3			Clarifloc	1350	LBS
4			Lime	24.55	T
5			Clarifloc	1350	LBS
6			Lime	26.21	T
7			Lime	26.09	T
8			Chlorine,	750	LBS
9			Lime	26.12	T

	Kingwood Central WWTP				
No.	Invoice N	Date	Description	Quantity	Unit
	COH149	12-May-09			
1			Clarifloc (R) C-6288 in	1350	LBS
2			Lime	26.08	T
3			Lime	26.39	T
4			Lime	26.13	T
6			Calcium Hypochlorite 7	3,000	LBS
7			Sulfamic Acid, 50 # Ba	88	BG
	COH148	14-Apr-09			
1			Lime	26.25	T
2			Lime	26.041	T
3			Lime	26.79	T
4			Clarifloc (R) C-6288 in	1350	LBS
5			Chlorine, 150 # CYL	900	LBS
6			Sulfamic Acid, 50 # Ba	88	BG
7			Lime	26.17	T
9			Sulfamic Acid, 50 # Ba	88	BG
	COH147	9-Mar-09			
1			Lime	25.47	T
3			Lime	24.44	T
4			Lime	26.36	T
5			Lime	26.73	T
	COH146	9-Feb-09			
2			Bulk Fine Quicklime	25.030	T
3			Clarifloc (R) C-6288 in	1350	LBS
4			Bulk Pulverized	24.980	T
5			Clarifloc (R) C-6288 in	2700	LBS
			Sub Total	4100.010	
	COH145	14-Jan-09			
2			Bulk Fine Quicklime	25.390	T

	Kingwood Central WWTP				
No.	Invoice No.	Date	Description	Quantity	Unit
2			Bulk Fine Quicklime	26.65	T
4			Calcium Hypochlorite 70%	600	LBS
5			Calcium Hypochlorite 70%	1400	LBS
6			Clarifloc (R) C-6288 in 450	1350	LBS
	COH143	11-Nov-08			
1			Bulk Fine Quicklime	25.780	T
2			Clarifloc (R) C-6288 in 450	1350	LBS
3			Bulk Fine Quicklime	26.89	T
	COH142	9-Oct-08			
1			Clarifloc (R) C-6288 in 450	1350	LBS
3			Sulfamic Acid, 50 # Bag	49	BG
4			Sulfamic Acid, 50 # Bag	44	BG
5			Sulfamic Acid, 50 # Bag	44	BG
	COH141	5-Sep-08			
1			Bulk Fine Quicklime	25.470	T
2			Bulk Fine Quicklime	24.800	T
3			OPTI-PRO PLYMER SLV	1	Box
4			Bulk Fine Quicklime	24.740	T
	COH140	7-Aug-08			
7			Cal Hypo - 100 #		LBS
8			Clarifloc (R) C-6288 in 450	1350	LBS

	Kingwood Central WWTP				
No.	Invoice No	Date	Description	Quantit	Unit
1	COH139	14-Jul-08			
2			Bulk Fine Quicklime	24.900	T
3			Sulfamic Acid, 50 # Bag		BG
4			Bulk Fine Quicklime	25.750	T
5			Bulk Fine Quicklime	25.200	T
6			Clarifloc (R) C-6288 in 450	1350	LBS
			Bulk Fine Quicklime	25.670	T
	COH138	10-Jun-08			
1			Lime	25.270	T
2			Bulk Fine Quicklime	25.700	T
3			Clarifloc (R) C-6288 in 450	1350	LBS
4			Bulk Fine Quicklime	25.000	T
5			Bulk Fine Quicklime	25.070	T
7			Bulk Fine Quicklime	25.540	T
			Clarifloc (R) C-6288 in 450	1350	LBS
	COH137	9-May-08			
1			Clarifloc (R) C-6288 in 450	1350	LBS
2			Bulk Fine Quicklime	25.040	T
3			Bulk Fine Quicklime	25.000	T
4			Sulfamic Acid, 50 # Bag		BG
5			Cal Hypo - 100 #		LBS
6			Bulk Fine Quicklime	25.580	T
	COH136	10-Apr-08			
1			Sulfamic Acid 88- 50 # Bag		
2			Lime	25.12	T
3			Clarifloc (R) C-6288 in 3-450 # Drum		
4			Lime	25.000	T
5			Lime	24.940	T
6			Lime	25.000	T
9			Sulfamic Acid, 50 # Bag		BG
10			Bulk Fine Quicklime	25.04	T
11			Clarifloc (R) C-6288 in 450	1350	LBS
12			Bulk Fine Quicklime	25.16	T
13			Bulk Fine Quicklime	25.420	T

APPENDIX I

HISTORICAL DATA DISCHARGE MONITORING REPORTS (DMRs)

(24 MONTHS)

PERMITTEE NAME/ADDRESS (Include Facility Name/Location if different)

NATIONAL POLLUTANT DISCHARGE ELIMINATION SYSTEM (NPDES)
DISCHARGE MONITORING REPORT (DMR)

NAME: CITY OF HOUSTON
ADDRESS: DEPT OF PUBLIC WORKS & ENGINEERING
P O BOX 262549
HOUSTON TX 77207-2549
FACILITY: FOREST COVE
LOCATION:

PERMIT NUMBER: TX0115924

DISCHARGE NUMBER: 001 A

MINOR

F - FINAL
DOMESTIC FACILITY-001

☐ Check here if No Discharge

MONITORING PERIOD	YEAR	MO	DAY		YEAR	MO	DAY
FROM	07	11	01	TO	07	11	30

NOTE: Read instructions before completing this form.

PARAMETER		QUANTITY OR LOADING AVERAGE	QUANTITY OR LOADING MAXIMUM	QUANTITY OR LOADING UNITS	QUALITY OR CONCENTRATION MINIMUM	QUALITY OR CONCENTRATION AVERAGE	QUALITY OR CONCENTRATION MAXIMUM	QUALITY OR CONCENTRATION UNITS	NO. EX	FREQUENCY OF ANALYSIS	SAMPLE TYPE
OXYGEN, DISSOLVED (DO) 00300 1 0 0 EFFLUENT GROSS VALUE	SAMPLE MEASUREMENT	******	******		7.0	******	******		0	WEEKLY	GRAB
	PERMIT REQUIREMENT	******	******	**** ****	4.0 MO MIN	******	******	(19) MG/L		WEEKLY	GRAB
pH 00400 1 0 0 EFFLUENT GROSS VALUE	SAMPLE MEASUREMENT	******	******		7.4	******	7.6		0	WEEKLY	GRAB
	PERMIT REQUIREMENT	******	******	**** ****	6.0 MINIMUM	******	9.0 MAXIMUM	(12) SU		TWICE/ MONTH	GRAB
SOLIDS, TOTAL SUSPENDED 00530 1 0 0 EFFLUENT GROSS VALUE	SAMPLE MEASUREMENT	3	******		******	1	2		0	WEEKLY	COMPOS
	PERMIT REQUIREMENT	119 DAILY AV	******	(26) LBS/DY	******	15 DAILY AV	40 DAILY MX	(19) MG/L		WEEKLY	COMPOS
NITROGEN, AMMONIA TOTAL (AS N) 00610 1 0 0 EFFLUENT GROSS VALUE	SAMPLE MEASUREMENT	0.8	******		******	0.3	0.9		0	WEEKLY	COMPOS
	PERMIT REQUIREMENT	24 DAILY AV	******	(26) LBS/DY	******	3 DAILY AV	10 DAILY MX	(19) MG/L		WEEKLY	COMPOS
FLOW, IN CONDUIT OR THRU TREATMENT PLANT 50050 1 0 0 EFFLUENT GROSS VALUE	SAMPLE MEASUREMENT	0.354	1.012		******	******	******		0	CONTIN UOUS	TOTALZ
	PERMIT REQUIREMENT	0.95 DAILY AV	REPORT DAILY MX	(03) MGD	******	******	******	**** ****		CONTIN UOUS	TOTALZ
COLIFORM, FECAL GENERAL 74055 1 0 0 EFFLUENT GROSS VALUE	SAMPLE MEASUREMENT	******	******		******	23	21		0	DAILY	GRAB
	PERMIT REQUIREMENT	******	******	**** ****	******	200 DAILY AV	400 7 DA AVG	(13) #/100ML		DAILY	GRAB
BOD, CARBONACEOUS 05 DAY, 20C 80082 1 0 0 EFFLUENT GROSS VALUE	SAMPLE MEASUREMENT	5	******		******	2	2		0	WEEKLY	COMPOS
	PERMIT REQUIREMENT	79 DAILY AV	******	(26) LBS/DY	******	10 DAILY AV	25 DAILY MX	(19) MG/L		WEEKLY	COMPOS

NAME/TITLE PRINCIPAL EXECUTIVE OFFICER

JUN CHANG
DEPUTY DIRECTOR

TYPED OR PRINTED

I certify under penalty of law that this document and all attachments were prepared under my direction or supervision in accordance with a system designed to assure that qualified personnel properly gather and evaluate the information submitted. Based on my inquiry of the person or persons who manage the system, or those persons directly responsible for gathering the information, the information submitted is, to the best of my knowledge and belief, true, accurate and complete. I am aware that there are significant penalties for submitting false information, including the possibility of fine and imprisonment for knowing violations. See 18 U.S.C. § 1001 and 33 USC § 1319. (Penalties under these statutes may include fines up to $10,000 and/or maximum imprisonment of between 6 months and 5 years.)

SIGNATURE OF PRINCIPAL EXECUTIVE OFFICER OR AUTHORIZED AGENT

TELEPHONE AREA	TELEPHONE NUMBER	DATE YEAR	DATE MO	DATE DAY
281	575-2824	09	10	07

COMMENT AND EXPLANATIONS OF ANY VIOLATIONS (Reference all attachments here)

PERMITTEE NAME/ADDRESS (Include Facility Name/Location if different)

NATIONAL POLLUTANT DISCHARGE ELIMINATION SYSTEM (NPDES)
DISCHARGE MONITORING REPORT (DMR)

NAME: CITY OF HOUSTON
ADDRESS: DEPT OF PUBLIC WORKS & ENGINEERING
P O BOX 262549
HOUSTON TX 77207-2549
FACILITY: FOREST COVE
LOCATION:

PERMIT NUMBER: TX0115924

DISCHARGE NUMBER: 001 A

MINOR

F - FINAL
DOMESTIC FACILITY-001

☐ Check here if No Discharge

MONITORING PERIOD

FROM YEAR	MO	DAY	TO YEAR	MO	DAY
07	12	01	07	12	31

NOTE: Read instructions before completing this form.

PARAMETER		QUANTITY OR LOADING AVERAGE	QUANTITY OR LOADING MAXIMUM	QUANTITY OR LOADING UNITS	QUALITY OR CONCENTRATION MINIMUM	QUALITY OR CONCENTRATION AVERAGE	QUALITY OR CONCENTRATION MAXIMUM	QUALITY OR CONCENTRATION UNITS	NO. EX	FREQUENCY OF ANALYSIS	SAMPLE TYPE
OXYGEN, DISSOLVED (DO) 00300 1 0 0 EFFLUENT GROSS VALUE	SAMPLE MEASUREMENT	******	******		7.0	******	******		0	WEEKLY	GRAB
	PERMIT REQUIREMENT	******	******	**** ****	4.0 MO MIN	******	******	(19) MG/L		WEEKLY	GRAB
pH 00400 1 0 0 EFFLUENT GROSS VALUE	SAMPLE MEASUREMENT	******	******		7.2	******	7.5		0	WEEKLY	GRAB
	PERMIT REQUIREMENT	******	******	**** ****	6.0 MINIMUM	******	9.0 MAXIMUM	(12) SU		TWICE/ MONTH	GRAB
SOLIDS, TOTAL SUSPENDED 00530 1 0 0 EFFLUENT GROSS VALUE	SAMPLE MEASUREMENT	4	******		******	1	2		0	WEEKLY	COMPOS
	PERMIT REQUIREMENT	119 DAILY AV	******	(26) LBS/DY	******	15 DAILY AV	40 DAILY MX	(19) MG/L		WEEKLY	COMPOS
NITROGEN, AMMONIA TOTAL (AS N) 00610 1 0 0 EFFLUENT GROSS VALUE	SAMPLE MEASUREMENT	0.5	******		******	0.2	0.3		0	WEEKLY	COMPOS
	PERMIT REQUIREMENT	24 DAILY AV	******	(26) LBS/DY	******	3 DAILY AV	10 DAILY MX	(19) MG/L		WEEKLY	COMPOS
FLOW, IN CONDUIT OR THRU TREATMENT PLANT 50050 1 0 0 EFFLUENT GROSS VALUE	SAMPLE MEASUREMENT	0.313	0.518		******	******	******		0	CONTIN UOUS	TOTALZ
	PERMIT REQUIREMENT	0.95 DAILY AV	REPORT DAILY MX	(03) MGD	******	******	******	**** ****		CONTIN UOUS	TOTALZ
COLIFORM, FECAL GENERAL 74055 1 0 0 EFFLUENT GROSS VALUE	SAMPLE MEASUREMENT	******	******		******	14	33		0	DAILY	GRAB
	PERMIT REQUIREMENT	******	******	**** ****	******	200 DAILY AV	400 7 DA AVG	(13) #/100ML		DAILY	GRAB
BOD, CARBONACEOUS 05 DAY, 20C 80082 1 0 0 EFFLUENT GROSS VALUE	SAMPLE MEASUREMENT	5	******		******	2	3		0	WEEKLY	COMPOS
	PERMIT REQUIREMENT	79 DAILY AV	******	(26) LBS/DY	******	10 DAILY AV	25 DAILY MX	(19) MG/L		WEEKLY	COMPOS

NAME/TITLE PRINCIPAL EXECUTIVE OFFICER

JUN CHANG
DEPUTY DIRECTOR

TYPED OR PRINTED

I certify under penalty of law that this document and all attachments were prepared under my direction or supervision in accordance with a system designed to assure that qualified personnel properly gather and evaluate the information submitted. Based on my inquiry of the person or persons who manage the system, or those persons directly responsible for gathering the information, the information submitted is, to the best of my knowledge and belief, true, accurate and complete. I am aware that there are significant penalties for submitting false information, including the possibility of fine and imprisonment for knowing violations. See 18 U.S.C. § 1001 and 33 USC § 1319. (Penalties under these statutes may include fines up to $10,000 and/or maximum imprisonment of between 6 months and 5 years.)

SIGNATURE OF PRINCIPAL EXECUTIVE OFFICER OR AUTHORIZED AGENT

TELEPHONE AREA	TELEPHONE NUMBER	DATE YEAR	DATE MO	DATE DAY
281	575-2824	09	10	07

COMMENT AND EXPLANATIONS OF ANY VIOLATIONS (Reference all attachments here)

PERMITTEE NAME/ADDRESS (Include Facility Name/Location if different)

NATIONAL POLLUTANT DISCHARGE ELIMINATION SYSTEM (NPDES)
DISCHARGE MONITORING REPORT (DMR)

NAME: CITY OF HOUSTON
ADDRESS: DEPT OF PUBLIC WORKS & ENGINEERING
P O BOX 262549
HOUSTON TX 77207-2549
FACILITY: FOREST COVE
LOCATION:

PERMIT NUMBER: TX0115924
DISCHARGE NUMBER: 001 A

MINOR
F - FINAL
DOMESTIC FACILITY-001

☐ Check here if No Discharge

MONITORING PERIOD

FROM YEAR	MO	DAY	TO YEAR	MO	DAY
07	12	01	07	12	31

NOTE: Read instructions before completing this form.

PARAMETER		QUANTITY OR LOADING AVERAGE	QUANTITY OR LOADING MAXIMUM	QUANTITY OR LOADING UNITS	QUALITY OR CONCENTRATION MINIMUM	QUALITY OR CONCENTRATION AVERAGE	QUALITY OR CONCENTRATION MAXIMUM	QUALITY OR CONCENTRATION UNITS	NO. EX	FREQUENCY OF ANALYSIS	SAMPLE TYPE
OXYGEN, DISSOLVED (DO) 00300 1 0 0 EFFLUENT GROSS VALUE	SAMPLE MEASUREMENT	******	******		7.0	******	******		0	WEEKLY	GRAB
	PERMIT REQUIREMENT	******	******	**** ****	4.0 MO MIN	******	******	(19) MG/L		WEEKLY	GRAB
pH 00400 1 0 0 EFFLUENT GROSS VALUE	SAMPLE MEASUREMENT	******	******		7.2	******	7.5		0	WEEKLY	GRAB
	PERMIT REQUIREMENT	******	******	**** ****	6.0 MINIMUM	******	9.0 MAXIMUM	(12) SU		TWICE/ MONTH	GRAB
SOLIDS, TOTAL SUSPENDED 00530 1 0 0 EFFLUENT GROSS VALUE	SAMPLE MEASUREMENT	4	******		******	1	2		0	WEEKLY	COMPOS
	PERMIT REQUIREMENT	119 DAILY AV	******	(26) LBS/DY	******	15 DAILY AV	40 DAILY MX	(19) MG/L		WEEKLY	COMPOS
NITROGEN, AMMONIA TOTAL (AS N) 00610 1 0 0 EFFLUENT GROSS VALUE	SAMPLE MEASUREMENT	0.5	******		******	0.2	0.3		0	WEEKLY	COMPOS
	PERMIT REQUIREMENT	24 DAILY AV	******	(26) LBS/DY	******	3 DAILY AV	10 DAILY MX	(19) MG/L		WEEKLY	COMPOS
FLOW, IN CONDUIT OR THRU TREATMENT PLANT 50050 1 0 0 EFFLUENT GROSS VALUE	SAMPLE MEASUREMENT	0.313	0.518		******	******	******		0	CONTIN UOUS	TOTALZ
	PERMIT REQUIREMENT	0.95 DAILY AV	REPORT DAILY MX	(03) MGD	******	******	******	**** ****		CONTIN UOUS	TOTALZ
COLIFORM, FECAL GENERAL 74055 1 0 0 EFFLUENT GROSS VALUE	SAMPLE MEASUREMENT	******	******		******	14	33		0	DAILY	GRAB
	PERMIT REQUIREMENT	******	******	**** ****	******	200 DAILY AV	400 7 DA AVG	(13) #/100ML		DAILY	GRAB
BOD, CARBONACEOUS 05 DAY, 20C 80082 1 0 0 EFFLUENT GROSS VALUE	SAMPLE MEASUREMENT	5	******		******	2	3		0	WEEKLY	COMPOS
	PERMIT REQUIREMENT	79 DAILY AV	******	(26) LBS/DY	******	10 DAILY AV	25 DAILY MX	(19) MG/L		WEEKLY	COMPOS

NAME/TITLE PRINCIPAL EXECUTIVE OFFICER

JUN CHANG
DEPUTY DIRECTOR

TYPED OR PRINTED

I certify under penalty of law that this document and all attachments were prepared under my direction or supervision in accordance with a system designed to assure that qualified personnel properly gather and evaluate the information submitted. Based on my inquiry of the person or persons who manage the system, or those persons directly responsible for gathering the information, the information submitted is, to the best of my knowledge and belief, true, accurate and complete. I am aware that there are significant penalties for submitting false information, including the possibility of fine and imprisonment for knowing violations. See 18 U.S.C. § 1001 and 33 USC § 1319. (Penalties under these statutes may include fines up to $10,000 and or maximum imprisonment of between 6 months and 5 years.)

SIGNATURE OF PRINCIPAL EXECUTIVE OFFICER OR AUTHORIZED AGENT

TELEPHONE AREA	NUMBER	DATE YEAR	MO	DAY
281	575-2824	09	10	07

COMMENT AND EXPLANATIONS OF ANY VIOLATIONS (Reference all attachments here)

PERMITTEE NAME/ADDRESS (Include Facility Name/Location if different)

NATIONAL POLLUTANT DISCHARGE ELIMINATION SYSTEM (NPDES)
DISCHARGE MONITORING REPORT (DMR)

NAME: CITY OF HOUSTON
ADDRESS: DEPT OF PUBLIC WORKS & ENGINEERING
P O BOX 262549
HOUSTON TX 77207-2549
FACILITY: FOREST COVE
LOCATION:

TX0115924 — PERMIT NUMBER
001 A — DISCHARGE NUMBER

MINOR
F - FINAL
DOMESTIC FACILITY-001

MONITORING PERIOD

	YEAR	MO	DAY		YEAR	MO	DAY
FROM	08	01	01	TO	08	01	31

☐ Check here if No Discharge

NOTE: Read instructions before completing this form.

PARAMETER		QUANTITY OR LOADING AVERAGE	QUANTITY OR LOADING MAXIMUM	QUANTITY OR LOADING UNITS	QUALITY OR CONCENTRATION MINIMUM	QUALITY OR CONCENTRATION AVERAGE	QUALITY OR CONCENTRATION MAXIMUM	QUALITY OR CONCENTRATION UNITS	NO. EX	FREQUENCY OF ANALYSIS	SAMPLE TYPE
OXYGEN, DISSOLVED (DO) 00300 1 0 0 EFFLUENT GROSS VALUE	SAMPLE MEASUREMENT	******	******		7.1	******	******		0	WEEKLY	GRAB
	PERMIT REQUIREMENT	******	******	**********	4.0 MO MIN	******	******	(19) MG/L		WEEKLY	GRAB
pH 00400 1 0 0 EFFLUENT GROSS VALUE	SAMPLE MEASUREMENT	******	******		7.2	******	7.5		0	WEEKLY	GRAB
	PERMIT REQUIREMENT	******	******	**********	6.0 MINIMUM	******	9.0 MAXIMUM	(12) SU		TWICE/ MONTH	GRAB
SOLIDS, TOTAL SUSPENDED 00530 1 0 0 EFFLUENT GROSS VALUE	SAMPLE MEASUREMENT	5	******		******	2	4		0	WEEKLY	COMPOS
	PERMIT REQUIREMENT	119 DAILY AV	******	(26) LBS/DY	******	15 DAILY AV	40 DAILY MX	(19) MG/L		WEEKLY	COMPOS
NITROGEN, AMMONIA TOTAL (AS N) 00610 1 0 0 EFFLUENT GROSS VALUE	SAMPLE MEASUREMENT	0.7	******		******	0.2	0.4		0	WEEKLY	COMPOS
	PERMIT REQUIREMENT	24 DAILY AV	******	(26) LBS/DY	******	3 DAILY AV	10 DAILY MX	(19) MG/L		WEEKLY	COMPOS
FLOW, IN CONDUIT OR THRU TREATMENT PLANT 50050 1 0 0 EFFLUENT GROSS VALUE	SAMPLE MEASUREMENT	0.385	1.043		******	******	******		0	CONTIN UOUS	TOTALZ
	PERMIT REQUIREMENT	0.95 DAILY AV	REPORT DAILY MX	(03) MGD	******	******	******	**********		CONTIN UOUS	TOTALZ
COLIFORM, FECAL GENERAL 74055 1 0 0 EFFLUENT GROSS VALUE	SAMPLE MEASUREMENT	******	******		******	15	19		0	DAILY	GRAB
	PERMIT REQUIREMENT	******	******	**********	******	200 DAILY AV	400 7 DA AVG	(13) #/100ML		DAILY	GRAB
BOD, CARBONACEOUS 05 DAY, 20C 80082 1 0 0 EFFLUENT GROSS VALUE	SAMPLE MEASUREMENT	5	******		******	1	3		0	WEEKLY	COMPOS
	PERMIT REQUIREMENT	79 DAILY AV	******	(26) LBS/DY	******	10 DAILY AV	25 DAILY MX	(19) MG/L		WEEKLY	COMPOS

NAME/TITLE PRINCIPAL EXECUTIVE OFFICER

JUN CHANG
DEPUTY DIRECTOR

TYPED OR PRINTED

I certify under penalty of law that this document and all attachments were prepared under my direction or supervision in accordance with a system designed to assure that qualified personnel properly gather and evaluate the information submitted. Based on my inquiry of the person or persons who manage the system, or those persons directly responsible for gathering the information, the information submitted is, to the best of my knowledge and belief, true, accurate and complete. I am aware that there are significant penalties for submitting false information, including the possibility of fine and imprisonment for knowing violations. See 18 U.S.C. § 1001 and 33 USC § 1319. (Penalties under these statutes may include fines up to $10,000 and a minimum imprisonment of between 3 months and 5 years.)

SIGNATURE OF PRINCIPAL EXECUTIVE OFFICER OR AUTHORIZED AGENT

TELEPHONE AREA	TELEPHONE NUMBER	DATE YEAR	DATE MO	DATE DAY
281	575-2824	09	10	07

COMMENT AND EXPLANATIONS OF ANY VIOLATIONS (Reference all attachments here)

PERMITTEE NAME/ADDRESS (Include Facility Name/Location if different)

NATIONAL POLLUTANT DISCHARGE ELIMINATION SYSTEM (NPDES)
DISCHARGE MONITORING REPORT (DMR)

NAME: CITY OF HOUSTON
ADDRESS: DEPT OF PUBLIC WORKS & ENGINEERING
P O BOX 262549
HOUSTON TX 77207-2549
FACILITY LOCATION: FOREST COVE

PERMIT NUMBER: TX0115924
DISCHARGE NUMBER: 001 A

MINOR
F - FINAL
DOMESTIC FACILITY-001

☐ Check here if No Discharge

MONITORING PERIOD

	YEAR	MO	DAY		YEAR	MO	DAY
FROM	08	02	01	TO	08	02	29

NOTE: Read instructions before completing this form.

PARAMETER		QUANTITY OR LOADING			QUALITY OR CONCENTRATION				NO. EX	FREQUENCY OF ANALYSIS	SAMPLE TYPE
		AVERAGE	MAXIMUM	UNITS	MINIMUM	AVERAGE	MAXIMUM	UNITS			
OXYGEN, DISSOLVED (DO) 00300 1 0 0 EFFLUENT GROSS VALUE	SAMPLE MEASUREMENT	******	******		7.1	******	******		0	WEEKLY	GRAB
	PERMIT REQUIREMENT	******	******	**** ****	4.0 MO MIN	******	******	(19) MG/L		WEEKLY	GRAB
pH 00400 1 0 0 EFFLUENT GROSS VALUE	SAMPLE MEASUREMENT	******	******		7.2	******	7.4		0	WEEKLY	GRAB
	PERMIT REQUIREMENT	******	******	**** ****	6.0 MINIMUM	******	9.0 MAXIMUM	(12) SU		TWICE/ MONTH	GRAB
SOLIDS, TOTAL SUSPENDED 00530 1 0 0 EFFLUENT GROSS VALUE	SAMPLE MEASUREMENT	5	******		******	2	2		0	WEEKLY	COMPOS
	PERMIT REQUIREMENT	119 DAILY AV	******	(26) LBS/DY	******	15 DAILY AV	40 DAILY MX	(19) MG/L		WEEKLY	COMPOS
NITROGEN, AMMONIA TOTAL (AS N) 00610 1 0 0 EFFLUENT GROSS VALUE	SAMPLE MEASUREMENT	0.5	******		******	0.2	0.3		0	WEEKLY	COMPOS
	PERMIT REQUIREMENT	24 DAILY AV	******	(26) LBS/DY	******	3 DAILY AV	10 DAILY MX	(19) MG/L		WEEKLY	COMPOS
FLOW, IN CONDUIT OR THRU TREATMENT PLANT 50050 1 0 0 EFFLUENT GROSS VALUE	SAMPLE MEASUREMENT	0.412	1.182		******	******	******		0	CONTIN UOUS	TOTALZ
	PERMIT REQUIREMENT	0.95 DAILY AV	REPORT DAILY MX	(03) MGD	******	******	******	**** ****		CONTIN UOUS	TOTALZ
COLIFORM, FECAL GENERAL 74055 1 0 0 EFFLUENT GROSS VALUE	SAMPLE MEASUREMENT	******	******		******	14	14		0	DAILY	GRAB
	PERMIT REQUIREMENT	******	******	**** ****	******	200 DAILY AV	400 7 DA AVG	(13) #/100ML		DAILY	GRAB
BOD, CARBONACEOUS 05 DAY, 20C 80082 1 0 0 EFFLUENT GROSS VALUE	SAMPLE MEASUREMENT	4	******		******	1	2		0	WEEKLY	COMPOS
	PERMIT REQUIREMENT	79 DAILY AV	******	(26) LBS/DY	******	10 DAILY AV	25 DAILY MX	(19) MG/L		WEEKLY	COMPOS

NAME/TITLE PRINCIPAL EXECUTIVE OFFICER

JUN CHANG
DEPUTY DIRECTOR

TYPED OR PRINTED

I certify under penalty of law that this document and all attachments were prepared under my direction or supervision in accordance with a system designed to assure that qualified personnel properly gather and evaluate the information submitted. Based on my inquiry of the person or persons who manage the system, or those persons directly responsible for gathering the information, the information submitted is, to the best of my knowledge and belief, true, accurate and complete. I am aware that there are significant penalties for submitting false information, including the possibility of fine and imprisonment for knowing violations. See 18 U.S.C. § 1001 and 33 USC § 1319. (Penalties under these statutes may include fines up to $10,000 and or maximum imprisonment of between 6 months and 5 years.)

SIGNATURE OF PRINCIPAL EXECUTIVE OFFICER OR AUTHORIZED AGENT

TELEPHONE		DATE		
AREA	NUMBER	YEAR	MO	DAY
281	575-2824	09	10	07

COMMENT AND EXPLANATIONS OF ANY VIOLATIONS (Reference all attachments here)

PERMITTEE NAME/ADDRESS (Include Facility Name/Location if different)

NATIONAL POLLUTANT DISCHARGE ELIMINATION SYSTEM (NPDES)
DISCHARGE MONITORING REPORT (DMR)

NAME: CITY OF HOUSTON
ADDRESS: DEPT OF PUBLIC WORKS & ENGINEERING
P O BOX 262549
HOUSTON TX 77207-2549
FACILITY: FOREST COVE
LOCATION:

PERMIT NUMBER: TX0115924
DISCHARGE NUMBER: 001 A

MINOR
F - FINAL
DOMESTIC FACILITY-001

☐ Check here if No Discharge

MONITORING PERIOD	YEAR	MO	DAY		YEAR	MO	DAY
FROM	08	03	01	TO	08	03	31

NOTE: Read instructions before completing this form.

PARAMETER		QUANTITY OR LOADING AVERAGE	QUANTITY OR LOADING MAXIMUM	QUANTITY OR LOADING UNITS	QUALITY OR CONCENTRATION MINIMUM	QUALITY OR CONCENTRATION AVERAGE	QUALITY OR CONCENTRATION MAXIMUM	QUALITY OR CONCENTRATION UNITS	NO. EX	FREQUENCY OF ANALYSIS	SAMPLE TYPE
OXYGEN, DISSOLVED (DO) 00300 1 0 0 EFFLUENT GROSS VALUE	SAMPLE MEASUREMENT	******	******		7.2	******	******		0	WEEKLY	GRAB
	PERMIT REQUIREMENT	******	******	**** ****	4.0 MO MIN	******	******	(19) MG/L		WEEKLY	GRAB
pH 00400 1 0 0 EFFLUENT GROSS VALUE	SAMPLE MEASUREMENT	******	******		7.2	******	7.5		0	WEEKLY	GRAB
	PERMIT REQUIREMENT	******	******	**** ****	6.0 MINIMUM	******	9.0 MAXIMUM	(12) SU		TWICE/ MONTH	GRAB
SOLIDS, TOTAL SUSPENDED 00530 1 0 0 EFFLUENT GROSS VALUE	SAMPLE MEASUREMENT	3	******		******	1	1		0	WEEKLY	COMPOS
	PERMIT REQUIREMENT	119 DAILY AV	******	(26) LBS/DY	******	15 DAILY AV	40 DAILY MX	(19) MG/L		WEEKLY	COMPOS
NITROGEN, AMMONIA TOTAL (AS N) 00610 1 0 0 EFFLUENT GROSS VALUE	SAMPLE MEASUREMENT	0.4	******		******	0.2	0.3		0	WEEKLY	COMPOS
	PERMIT REQUIREMENT	24 DAILY AV	******	(26) LBS/DY	******	3 DAILY AV	10 DAILY MX	(19) MG/L		WEEKLY	COMPOS
FLOW, IN CONDUIT OR THRU TREATMENT PLANT 50050 1 0 0 EFFLUENT GROSS VALUE	SAMPLE MEASUREMENT	0.326	0.572		******	******	******		0	CONTIN UOUS	TOTALZ
	PERMIT REQUIREMENT	0.95 DAILY AV	REPORT DAILY MX	(03) MGD	******	******	******	**** ****		CONTIN UOUS	TOTALZ
COLIFORM, FECAL GENERAL 74055 1 0 0 EFFLUENT GROSS VALUE	SAMPLE MEASUREMENT	******	******		******	15	18		0	DAILY	GRAB
	PERMIT REQUIREMENT	******	******	**** ****	******	200 DAILY AV	400 7 DA AVG	(13) #/100ML		DAILY	GRAB
BOD, CARBONACEOUS 05 DAY, 20C 80082 1 0 0 EFFLUENT GROSS VALUE	SAMPLE MEASUREMENT	6	******		******	2	5		0	WEEKLY	COMPOS
	PERMIT REQUIREMENT	79 DAILY AV	******	(26) LBS/DY	******	10 DAILY AV	25 DAILY MX	(19) MG/L		WEEKLY	COMPOS

NAME/TITLE PRINCIPAL EXECUTIVE OFFICER

JUN CHANG
DEPUTY DIRECTOR

TYPED OR PRINTED

I certify under penalty of law that this document and all attachments were prepared under my direction or supervision in accordance with a system designed to assure that qualified personnel properly gather and evaluate the information submitted. Based on my inquiry of the person or persons who manage the system, or those persons directly responsible for gathering the information, the information submitted is, to the best of my knowledge and belief, true, accurate and complete. I am aware that there are significant penalties for submitting false information, including the possibility of fine and imprisonment for knowing violations. See 18 U.S.C. § 1001 and 33 USC § 1319. (Penalties under these statutes may include fines up to $10,000 and or maximum imprisonment of between 6 months and 5 years.)

SIGNATURE OF PRINCIPAL EXECUTIVE OFFICER OR AUTHORIZED AGENT

TELEPHONE AREA	TELEPHONE NUMBER	DATE YEAR	DATE MO	DATE DAY
281	575-2824	09	10	07

COMMENT AND EXPLANATIONS OF ANY VIOLATIONS (Reference all attachments here)

PERMITTEE NAME/ADDRESS (Include Facility Name/Location if different)

NATIONAL POLLUTANT DISCHARGE ELIMINATION SYSTEM (NPDES)
DISCHARGE MONITORING REPORT (DMR)

NAME: CITY OF HOUSTON
ADDRESS: DEPT OF PUBLIC WORKS & ENGINEERING
P O BOX 262549
HOUSTON TX 77207-2549
FACILITY: FOREST COVE
LOCATION:

PERMIT NUMBER: TX0115924
DISCHARGE NUMBER: 001 A

MINOR
F - FINAL
DOMESTIC FACILITY-001

☐ Check here if No Discharge

MONITORING PERIOD

FROM YEAR	MO	DAY	TO YEAR	MO	DAY
08	04	01	08	04	30

NOTE: Read instructions before completing this form.

PARAMETER		QUANTITY OR LOADING AVERAGE	MAXIMUM	UNITS	QUALITY OR CONCENTRATION MINIMUM	AVERAGE	MAXIMUM	UNITS	NO. EX	FREQUENCY OF ANALYSIS	SAMPLE TYPE
OXYGEN, DISSOLVED (DO) 00300 1 0 0 EFFLUENT GROSS VALUE	SAMPLE MEASUREMENT	******	******		7.2	******	******		0	WEEKLY	GRAB
	PERMIT REQUIREMENT	******	******	**** ****	4.0 MO MIN	******	******	(19) MG/L		WEEKLY	GRAB
pH 00400 1 0 0 EFFLUENT GROSS VALUE	SAMPLE MEASUREMENT	******	******		7.2	******	7.5		0	WEEKLY	GRAB
	PERMIT REQUIREMENT	******	******	**** ****	6.0 MINIMUM	******	9.0 MAXIMUM	(12) SU		TWICE/ MONTH	GRAB
SOLIDS, TOTAL SUSPENDED 00530 1 0 0 EFFLUENT GROSS VALUE	SAMPLE MEASUREMENT	6	******		******	2	4		0	WEEKLY	COMPOS
	PERMIT REQUIREMENT	119 DAILY AV	******	(26) LBS/DY	******	15 DAILY AV	40 DAILY MX	(19) MG/L		WEEKLY	COMPOS
NITROGEN, AMMONIA TOTAL (AS N) 00610 1 0 0 EFFLUENT GROSS VALUE	SAMPLE MEASUREMENT	0.3	******		******	0.1	0.2		0	WEEKLY	COMPOS
	PERMIT REQUIREMENT	24 DAILY AV	******	(26) LBS/DY	******	3 DAILY AV	10 DAILY MX	(19) MG/L		WEEKLY	COMPOS
FLOW, IN CONDUIT OR THRU TREATMENT PLANT 50050 1 0 0 EFFLUENT GROSS VALUE	SAMPLE MEASUREMENT	0.273	0.320		******	******	******		0	CONTIN UOUS	TOTALZ
	PERMIT REQUIREMENT	0.95 DAILY AV	REPORT DAILY MX	(03) MGD	******	******	******	**** ****		CONTIN UOUS	TOTALZ
COLIFORM, FECAL GENERAL 74055 1 0 0 EFFLUENT GROSS VALUE	SAMPLE MEASUREMENT	******	******		******	15	18		0	DAILY	GRAB
	PERMIT REQUIREMENT	******	******	**** ****	******	200 DAILY AV	400 7 DA AVG	(13) #/100ML		DAILY	GRAB
BOD, CARBONACEOUS 05 DAY, 20C 80082 1 0 0 EFFLUENT GROSS VALUE	SAMPLE MEASUREMENT	7	******		******	3	5		0	WEEKLY	COMPOS
	PERMIT REQUIREMENT	79 DAILY AV	******	(26) LBS/DY	******	10 DAILY AV	25 DAILY MX	(19) MG/L		WEEKLY	COMPOS

NAME/TITLE PRINCIPAL EXECUTIVE OFFICER

JUN CHANG
DEPUTY DIRECTOR

TYPED OR PRINTED

I certify under penalty of law that this document and all attachments were prepared under my direction or supervision in accordance with a system designed to assure that qualified personnel properly gather and evaluate the information submitted. Based on my inquiry of the person or persons who manage the system, or those persons directly responsible for gathering the information, the information submitted is, to the best of my knowledge and belief, true, accurate and complete. I am aware that there are significant penalties for submitting false information, including the possibility of fine and imprisonment for knowing violations. See 18 U.S.C. § 1001 and 33 USC § 1319. (Penalties under these statutes may include fines up to $10,000 and a maximum imprisonment of between 6 months and 5 years.)

SIGNATURE OF PRINCIPAL EXECUTIVE OFFICER OR AUTHORIZED AGENT

TELEPHONE AREA	NUMBER	DATE YEAR	MO	DAY
281	575-2824	09	10	07

COMMENT AND EXPLANATIONS OF ANY VIOLATIONS (Reference all attachments here)

PERMITTEE NAME/ADDRESS (Include Facility Name/Location if different)

NATIONAL POLLUTANT DISCHARGE ELIMINATION SYSTEM (NPDES)
DISCHARGE MONITORING REPORT (DMR)

NAME: CITY OF HOUSTON
ADDRESS: DEPT OF PUBLIC WORKS & ENGINEERING
P O BOX 262549
HOUSTON TX 77207-2549
FACILITY: FOREST COVE
LOCATION:

PERMIT NUMBER: TX0115924
DISCHARGE NUMBER: 001 A

MINOR
F - FINAL
DOMESTIC FACILITY-001

☐ Check here if No Discharge

MONITORING PERIOD

	YEAR	MO	DAY		YEAR	MO	DAY
FROM	08	05	01	TO	08	05	31

NOTE: Read instructions before completing this form.

PARAMETER		QUANTITY OR LOADING			QUALITY OR CONCENTRATION				NO. EX	FREQUENCY OF ANALYSIS	SAMPLE TYPE
		AVERAGE	MAXIMUM	UNITS	MINIMUM	AVERAGE	MAXIMUM	UNITS			
OXYGEN, DISSOLVED (DO) 00300 1 0 0 EFFLUENT GROSS VALUE	SAMPLE MEASUREMENT	******	******		7.4	******	******		0	WEEKLY	GRAB
	PERMIT REQUIREMENT	******	******	**** ****	4.0 MO MIN	******	******	(19) MG/L		WEEKLY	GRAB
pH 00400 1 0 0 EFFLUENT GROSS VALUE	SAMPLE MEASUREMENT	******	******		7.2	******	7.4		0	WEEKLY	GRAB
	PERMIT REQUIREMENT	******	******	**** ****	6.0 MINIMUM	******	9.0 MAXIMUM	(12) SU		TWICE/ MONTH	GRAB
SOLIDS, TOTAL SUSPENDED 00530 1 0 0 EFFLUENT GROSS VALUE	SAMPLE MEASUREMENT	7	******		******	3	3		0	WEEKLY	COMPOS
	PERMIT REQUIREMENT	119 DAILY AV	******	(26) LBS/DY	******	15 DAILY AV	40 DAILY MX	(19) MG/L		WEEKLY	COMPOS
NITROGEN, AMMONIA TOTAL (AS N) 00610 1 0 0 EFFLUENT GROSS VALUE	SAMPLE MEASUREMENT	0.4	******		******	0.1	0.2		0	WEEKLY	COMPOS
	PERMIT REQUIREMENT	24 DAILY AV	******	(26) LBS/DY	******	3 DAILY AV	10 DAILY MX	(19) MG/L		WEEKLY	COMPOS
FLOW, IN CONDUIT OR THRU TREATMENT PLANT 50050 1 0 0 EFFLUENT GROSS VALUE	SAMPLE MEASUREMENT	0.319	1.376		******	******	******		0	CONTIN UOUS	TOTALZ
	PERMIT REQUIREMENT	0.95 DAILY AV	REPORT DAILY MX	(03) MGD	******	******	******	**** ****		CONTIN UOUS	TOTALZ
COLIFORM, FECAL GENERAL 74055 1 0 0 EFFLUENT GROSS VALUE	SAMPLE MEASUREMENT	******	******		******	15	19		0	DAILY	GRAB
	PERMIT REQUIREMENT	******	******	**** ****	******	200 DAILY AV	400 7 DA AVG	(13) #/100ML		DAILY	GRAB
BOD, CARBONACEOUS 05 DAY, 20C 80082 1 0 0 EFFLUENT GROSS VALUE	SAMPLE MEASUREMENT	4	******		******	2	3		0	WEEKLY	COMPOS
	PERMIT REQUIREMENT	79 DAILY AV	******	(26) LBS/DY	******	10 DAILY AV	25 DAILY MX	(19) MG/L		WEEKLY	COMPOS

NAME/TITLE PRINCIPAL EXECUTIVE OFFICER

JUN CHANG
DEPUTY DIRECTOR

TYPED OR PRINTED

I certify under penalty of law that this document and all attachments were prepared under my direction or supervision in accordance with a system designed to assure that qualified personnel properly gather and evaluate the information submitted. Based on my inquiry of the person or persons who manage the system, or those persons directly responsible for gathering the information, the information submitted is, to the best of my knowledge and belief, true, accurate and complete. I am aware that there are significant penalties for submitting false information, including the possibility of fine and imprisonment for knowing violations. See 18 U.S.C. § 1001 and 33 USC § 1319. (Penalties under these statutes may include fines up to $10,000 and/or maximum imprisonment of between 6 months and 5 years.)

SIGNATURE OF PRINCIPAL EXECUTIVE OFFICER OR AUTHORIZED AGENT

TELEPHONE		DATE		
281	575-2824	09	10	07
AREA	NUMBER	YEAR	MO	DAY

COMMENT AND EXPLANATIONS OF ANY VIOLATIONS (Reference all attachments here)

PERMITTEE NAME/ADDRESS (Include Facility Name/Location if different)

NATIONAL POLLUTANT DISCHARGE ELIMINATION SYSTEM (NPDES)
DISCHARGE MONITORING REPORT (DMR)

NAME: CITY OF HOUSTON
ADDRESS: DEPT OF PUBLIC WORKS & ENGINEERING
P O BOX 262549
HOUSTON TX 77207-2549
FACILITY: FOREST COVE
LOCATION:

TX0115924 — PERMIT NUMBER
001 A — DISCHARGE NUMBER

MINOR
F - FINAL
DOMESTIC FACILITY-001

MONITORING PERIOD

	YEAR	MO	DAY		YEAR	MO	DAY
FROM	08	06	01	TO	08	06	30

☐ Check here if No Discharge

NOTE: Read instructions before completing this form.

PARAMETER		QUANTITY OR LOADING AVERAGE	QUANTITY OR LOADING MAXIMUM	QUANTITY OR LOADING UNITS	QUALITY OR CONCENTRATION MINIMUM	QUALITY OR CONCENTRATION AVERAGE	QUALITY OR CONCENTRATION MAXIMUM	QUALITY OR CONCENTRATION UNITS	NO. EX	FREQUENCY OF ANALYSIS	SAMPLE TYPE
OXYGEN, DISSOLVED (DO) 00300 1 0 0 EFFLUENT GROSS VALUE	SAMPLE MEASUREMENT	******	******		7.2	******	******		0	WEEKLY	GRAB
	PERMIT REQUIREMENT	******	******	**** ****	4.0 MO MIN	******	******	(19) MG/L		WEEKLY	GRAB
pH 00400 1 0 0 EFFLUENT GROSS VALUE	SAMPLE MEASUREMENT	******	******		7.2	******	7.5		0	WEEKLY	GRAB
	PERMIT REQUIREMENT	******	******	**** ****	6.0 MINIMUM	******	9.0 MAXIMUM	(12) SU		TWICE/ MONTH	GRAB
SOLIDS, TOTAL SUSPENDED 00530 1 0 0 EFFLUENT GROSS VALUE	SAMPLE MEASUREMENT	5	******		******	2	3		0	WEEKLY	COMPOS
	PERMIT REQUIREMENT	119 DAILY AV	******	(26) LBS/DY	******	15 DAILY AV	40 DAILY MX	(19) MG/L		WEEKLY	COMPOS
NITROGEN, AMMONIA TOTAL (AS N) 00610 1 0 0 EFFLUENT GROSS VALUE	SAMPLE MEASUREMENT	0.4	******		******	0.2	0.2		0	WEEKLY	COMPOS
	PERMIT REQUIREMENT	24 DAILY AV	******	(26) LBS/DY	******	3 DAILY AV	10 DAILY MX	(19) MG/L		WEEKLY	COMPOS
FLOW, IN CONDUIT OR THRU TREATMENT PLANT 50050 1 0 0 EFFLUENT GROSS VALUE	SAMPLE MEASUREMENT	0.267	0.326		******	******	******		0	CONTIN UOUS	TOTALZ
	PERMIT REQUIREMENT	0.95 DAILY AV	REPORT DAILY MX	(03) MGD	******	******	******	**** ****		CONTIN UOUS	TOTALZ
COLIFORM, FECAL GENERAL 74055 1 0 0 EFFLUENT GROSS VALUE	SAMPLE MEASUREMENT	******	******		******	15	19		0	DAILY	GRAB
	PERMIT REQUIREMENT	******	******	**** ****	******	200 DAILY AV	400 7 DA AVG	(13) #/100ML		DAILY	GRAB
BOD, CARBONACEOUS 05 DAY, 20C 80082 1 0 0 EFFLUENT GROSS VALUE	SAMPLE MEASUREMENT	4	******		******	2	4		0	WEEKLY	COMPOS
	PERMIT REQUIREMENT	79 DAILY AV	******	(26) LBS/DY	******	10 DAILY AV	25 DAILY MX	(19) MG/L		WEEKLY	COMPOS

NAME/TITLE PRINCIPAL EXECUTIVE OFFICER

JUN CHANG
DEPUTY DIRECTOR

TYPED OR PRINTED

I certify under penalty of law that this document and all attachments were prepared under my direction or supervision in accordance with a system designed to assure that qualified personnel properly gather and evaluate the information submitted. Based on my inquiry of the person or persons who manage the system, or those persons directly responsible for gathering the information, the information submitted is, to the best of my knowledge and belief, true, accurate and complete. I am aware that there are significant penalties for submitting false information, including the possibility of fine and imprisonment for knowing violations. See 18 U.S.C. § 1001 and 33 USC § 1319. (Penalties under these statutes may include fines up to $10,000 and/or maximum imprisonment of between 5 months and 5 years.)

SIGNATURE OF PRINCIPAL EXECUTIVE OFFICER OR AUTHORIZED AGENT

TELEPHONE AREA	TELEPHONE NUMBER	DATE YEAR	DATE MO	DATE DAY
281	575-2824	09	10	07

COMMENT AND EXPLANATIONS OF ANY VIOLATIONS (Reference all attachments here)

PERMITTEE NAME/ADDRESS (Include Facility Name/Location if different)

NATIONAL POLLUTANT DISCHARGE ELIMINATION SYSTEM (NPDES)
DISCHARGE MONITORING REPORT (DMR)

NAME: CITY OF HOUSTON
ADDRESS: DEPT OF PUBLIC WORKS & ENGINEERING
P O BOX 262549
HOUSTON TX 77207-2549
FACILITY: FOREST COVE
LOCATION:

PERMIT NUMBER: TX0115924
DISCHARGE NUMBER: 001 A

MINOR
F - FINAL
DOMESTIC FACILITY-001

☐ Check here if No Discharge

MONITORING PERIOD	YEAR	MO	DAY		YEAR	MO	DAY
FROM	08	07	01	TO	08	07	31

NOTE: Read instructions before completing this form.

PARAMETER		QUANTITY OR LOADING AVERAGE	QUANTITY OR LOADING MAXIMUM	QUANTITY OR LOADING UNITS	QUALITY OR CONCENTRATION MINIMUM	QUALITY OR CONCENTRATION AVERAGE	QUALITY OR CONCENTRATION MAXIMUM	QUALITY OR CONCENTRATION UNITS	NO. EX	FREQUENCY OF ANALYSIS	SAMPLE TYPE
OXYGEN, DISSOLVED (DO) 00300 1 0 0 EFFLUENT GROSS VALUE	SAMPLE MEASUREMENT	******	******		7.2	******	******		0	WEEKLY	GRAB
	PERMIT REQUIREMENT	******	******	**** ****	4.0 MO MIN	******	******	(19) MG/L		WEEKLY	GRAB
pH 00400 1 0 0 EFFLUENT GROSS VALUE	SAMPLE MEASUREMENT	******	******		7.4	******	7.5		0	WEEKLY	GRAB
	PERMIT REQUIREMENT	******	******	**** ****	6.0 MINIMUM	******	9.0 MAXIMUM	(12) SU		TWICE/ MONTH	GRAB
SOLIDS, TOTAL SUSPENDED 00530 1 0 0 EFFLUENT GROSS VALUE	SAMPLE MEASUREMENT	4	******		******	2	2		0	WEEKLY	COMPOS
	PERMIT REQUIREMENT	119 DAILY AV	******	(26) LBS/DY	******	15 DAILY AV	40 DAILY MX	(19) MG/L		WEEKLY	COMPOS
NITROGEN, AMMONIA TOTAL (AS N) 00610 1 0 0 EFFLUENT GROSS VALUE	SAMPLE MEASUREMENT	0.3	******		******	0.2	0.3		0	WEEKLY	COMPOS
	PERMIT REQUIREMENT	24 DAILY AV	******	(26) LBS/DY	******	3 DAILY AV	10 DAILY MX	(19) MG/L		WEEKLY	COMPOS
FLOW, IN CONDUIT OR THRU TREATMENT PLANT 50050 1 0 0 EFFLUENT GROSS VALUE	SAMPLE MEASUREMENT	0.267	0.421		******	******	******		0	CONTIN UOUS	TOTALZ
	PERMIT REQUIREMENT	0.95 DAILY AV	REPORT DAILY MX	(03) MGD	******	******	******	**** ****		CONTIN UOUS	TOTALZ
COLIFORM, FECAL GENERAL 74055 1 0 0 EFFLUENT GROSS VALUE	SAMPLE MEASUREMENT	******	******		******	14	14		0	DAILY	GRAB
	PERMIT REQUIREMENT	******	******	**** ****	******	200 DAILY AV	400 7 DA AVG	(13) #/100ML		DAILY	GRAB
BOD, CARBONACEOUS 05 DAY, 20C 80082 1 0 0 EFFLUENT GROSS VALUE	SAMPLE MEASUREMENT	8	******		******	4	6		0	WEEKLY	COMPOS
	PERMIT REQUIREMENT	79 DAILY AV	******	(26) LBS/DY	******	10 DAILY AV	25 DAILY MX	(19) MG/L		WEEKLY	COMPOS

NAME/TITLE PRINCIPAL EXECUTIVE OFFICER

JUN CHANG
DEPUTY DIRECTOR

TYPED OR PRINTED

I certify under penalty of law that this document and all attachments were prepared under my direction or supervision in accordance with a system designed to assure that qualified personnel properly gather and evaluate the information submitted. Based on my inquiry of the person or persons who manage the system, or those persons directly responsible for gathering the information, the information submitted is, to the best of my knowledge and belief, true, accurate and complete. I am aware that there are significant penalties for submitting false information, including the possibility of fine and imprisonment for knowing violations. See 18 U.S.C. § 1001 and 33 USC § 1319. (Penalties under these statutes may include fines up to $10,000 and/or maximum imprisonment of between 6 months and 5 years.)

SIGNATURE OF PRINCIPAL EXECUTIVE OFFICER OR AUTHORIZED AGENT

TELEPHONE AREA	TELEPHONE NUMBER	DATE YEAR	DATE MO	DATE DAY
281	575-2824	09	10	07

COMMENT AND EXPLANATIONS OF ANY VIOLATIONS (Reference all attachments here)

PERMITTEE NAME/ADDRESS (Include Facility Name/Location if different)

NATIONAL POLLUTANT DISCHARGE ELIMINATION SYSTEM (NPDES)
DISCHARGE MONITORING REPORT (DMR)

NAME: CITY OF HOUSTON
ADDRESS: DEPT OF PUBLIC WORKS & ENGINEERING
P O BOX 262549
HOUSTON TX 77207-2549
FACILITY: FOREST COVE
LOCATION:

PERMIT NUMBER: TX0115924
DISCHARGE NUMBER: 001 A

MINOR

F - FINAL
DOMESTIC FACILITY-001

☐ Check here if No Discharge

MONITORING PERIOD	YEAR	MO	DAY		YEAR	MO	DAY
FROM	08	08	01	TO	08	08	31

NOTE: Read instructions before completing this form.

PARAMETER		QUANTITY OR LOADING			QUALITY OR CONCENTRATION				NO. EX	FREQUENCY OF ANALYSIS	SAMPLE TYPE
		AVERAGE	MAXIMUM	UNITS	MINIMUM	AVERAGE	MAXIMUM	UNITS			
OXYGEN, DISSOLVED (DO) 00300 1 0 0 EFFLUENT GROSS VALUE	SAMPLE MEASUREMENT	******	******		7.2	******	******		0	WEEKLY	GRAB
	PERMIT REQUIREMENT	******	******	**** ****	4.0 MO MIN	******	******	(19) MG/L		WEEKLY	GRAB
pH 00400 1 0 0 EFFLUENT GROSS VALUE	SAMPLE MEASUREMENT	******	******		7.1	******	7.6		0	WEEKLY	GRAB
	PERMIT REQUIREMENT	******	******	**** ****	6.0 MINIMUM	******	9.0 MAXIMUM	(12) SU		TWICE/ MONTH	GRAB
SOLIDS, TOTAL SUSPENDED 00530 1 0 0 EFFLUENT GROSS VALUE	SAMPLE MEASUREMENT	15	******		******	3	8		0	WEEKLY	COMPOS
	PERMIT REQUIREMENT	119 DAILY AV	******	(26) LBS/DY	******	15 DAILY AV	40 DAILY MX	(19) MG/L		WEEKLY	COMPOS
NITROGEN, AMMONIA TOTAL (AS N) 00610 1 0 0 EFFLUENT GROSS VALUE	SAMPLE MEASUREMENT	0.6	******		******	0.2	0.2		0	WEEKLY	COMPOS
	PERMIT REQUIREMENT	24 DAILY AV	******	(26) LBS/DY	******	3 DAILY AV	10 DAILY MX	(19) MG/L		WEEKLY	COMPOS
FLOW, IN CONDUIT OR THRU TREATMENT PLANT 50050 1 0 0 EFFLUENT GROSS VALUE	SAMPLE MEASUREMENT	0.279	0.730		******	******	******		0	CONTIN UOUS	TOTALZ
	PERMIT REQUIREMENT	0.95 DAILY AV	REPORT DAILY MX	(03) MGD	******	******	******	**** ****		CONTIN UOUS	TOTALZ
COLIFORM, FECAL GENERAL 74055 1 0 0 EFFLUENT GROSS VALUE	SAMPLE MEASUREMENT	******	******		******	16	21		0	DAILY	GRAB
	PERMIT REQUIREMENT	******	******	**** ****	******	200 DAILY AV	400 7 DA AVG	(13) #/100ML		DAILY	GRAB
BOD, CARBONACEOUS 05 DAY, 20C 80082 1 0 0 EFFLUENT GROSS VALUE	SAMPLE MEASUREMENT	8	******		******	2	3		0	WEEKLY	COMPOS
	PERMIT REQUIREMENT	79 DAILY AV	******	(26) LBS/DY	******	10 DAILY AV	25 DAILY MX	(19) MG/L		WEEKLY	COMPOS

NAME/TITLE PRINCIPAL EXECUTIVE OFFICER

JUN CHANG
DEPUTY DIRECTOR

TYPED OR PRINTED

I certify under penalty of law that this document and all attachments were prepared under my direction or supervision in accordance with a system designed to assure that qualified personnel properly gather and evaluate the information submitted. Based on my inquiry of the person or persons who manage the system, or those persons directly responsible for gathering the information, the information submitted is, to the best of my knowledge and belief, true, accurate and complete. I am aware that there are significant penalties for submitting false information, including the possibility of fine and imprisonment for knowing violations. See 18 U.S.C. § 1001 and 33 USC § 1319. (Penalties under these statutes may include fines up to $10,000 and/or minimum imprisonment of between 6 months and 5 years.)

SIGNATURE OF PRINCIPAL EXECUTIVE OFFICER OR AUTHORIZED AGENT

TELEPHONE		DATE		
281	575-2824	09	10	07
AREA	NUMBER	YEAR	MO	DAY

COMMENT AND EXPLANATIONS OF ANY VIOLATIONS (Reference all attachments here)

PERMITTEE NAME/ADDRESS (Include Facility Name/Location if different)

NATIONAL POLLUTANT DISCHARGE ELIMINATION SYSTEM (NPDES)
DISCHARGE MONITORING REPORT (DMR)

NAME: CITY OF HOUSTON
ADDRESS: DEPT OF PUBLIC WORKS & ENGINEERING
P O BOX 262549
HOUSTON TX 77207-2549
FACILITY: FOREST COVE
LOCATION:

PERMIT NUMBER: TX0115924
DISCHARGE NUMBER: 001 A

MINOR
F - FINAL
DOMESTIC FACILITY-001

☐ Check here if No Discharge

MONITORING PERIOD	YEAR	MO	DAY		YEAR	MO	DAY
FROM	08	09	01	TO	08	09	30

NOTE: Read instructions before completing this form.

PARAMETER		QUANTITY OR LOADING			QUALITY OR CONCENTRATION				NO. EX	FREQUENCY OF ANALYSIS	SAMPLE TYPE
		AVERAGE	MAXIMUM	UNITS	MINIMUM	AVERAGE	MAXIMUM	UNITS			
OXYGEN, DISSOLVED (DO) 00300 1 0 0 EFFLUENT GROSS VALUE	SAMPLE MEASUREMENT	******	******		7.2	******	******		0	WEEKLY	GRAB
	PERMIT REQUIREMENT	******	******	**** ****	4.0 MO MIN	******	******	(19) MG/L		WEEKLY	GRAB
pH 00400 1 0 0 EFFLUENT GROSS VALUE	SAMPLE MEASUREMENT	******	******		7.2	******	7.4		0	WEEKLY	GRAB
	PERMIT REQUIREMENT	******	******	**** ****	6.0 MINIMUM	******	9.0 MAXIMUM	(12) SU		TWICE/ MONTH	GRAB
SOLIDS, TOTAL SUSPENDED 00530 1 0 0 EFFLUENT GROSS VALUE	SAMPLE MEASUREMENT	8	******		******	3	8		0	WEEKLY	COMPOS
	PERMIT REQUIREMENT	119 DAILY AV	******	(26) LBS/DY	******	15 DAILY AV	40 DAILY MX	(19) MG/L		WEEKLY	COMPOS
NITROGEN, AMMONIA TOTAL (AS N) 00610 1 0 0 EFFLUENT GROSS VALUE	SAMPLE MEASUREMENT	0.7	******		******	0.3	0.6		0	WEEKLY	COMPOS
	PERMIT REQUIREMENT	24 DAILY AV	******	(26) LBS/DY	******	3 DAILY AV	10 DAILY MX	(19) MG/L		WEEKLY	COMPOS
FLOW, IN CONDUIT OR THRU TREATMENT PLANT 50050 1 0 0 EFFLUENT GROSS VALUE	SAMPLE MEASUREMENT	0.274	0.404		******	******	******		0	CONTIN UOUS	TOTALZ
	PERMIT REQUIREMENT	0.95 DAILY AV	REPORT DAILY MX	(03) MGD	******	******	******	**** ****		CONTIN UOUS	TOTALZ
COLIFORM, FECAL GENERAL 74055 1 0 0 EFFLUENT GROSS VALUE	SAMPLE MEASUREMENT	******	******		******	14	14		0	DAILY	GRAB
	PERMIT REQUIREMENT	******	******	**** ****	******	200 DAILY AV	400 7 DA AVG	(13) #/100ML		DAILY	GRAB
BOD, CARBONACEOUS 05 DAY, 20C 80082 1 0 0 EFFLUENT GROSS VALUE	SAMPLE MEASUREMENT	3	******		******	1	2		0	WEEKLY	COMPOS
	PERMIT REQUIREMENT	79 DAILY AV	******	(26) LBS/DY	******	10 DAILY AV	25 DAILY MX	(19) MG/L		WEEKLY	COMPOS

NAME/TITLE PRINCIPAL EXECUTIVE OFFICER

JUN CHANG
DEPUTY DIRECTOR

TYPED OR PRINTED

I certify under penalty of law that this document and all attachments were prepared under my direction or supervision in accordance with a system designed to assure that qualified personnel properly gather and evaluate the information submitted. Based on my inquiry of the person or persons who manage the system, or those persons directly responsible for gathering the information, the information submitted is, to the best of my knowledge and belief, true, accurate and complete. I am aware that there are significant penalties for submitting false information, including the possibility of fine and imprisonment for knowing violations. See 18 U.S.C. § 1001 and 33 USC § 1319. (Penalties under these statutes may include fines up to $10,000 and/or imprisonment imprisonment of between 6 months and 5 years.)

SIGNATURE OF PRINCIPAL EXECUTIVE OFFICER OR AUTHORIZED AGENT

TELEPHONE		DATE		
AREA	NUMBER	YEAR	MO	DAY
281	575-2824	09	10	07

COMMENT AND EXPLANATIONS OF ANY VIOLATIONS (Reference all attachments here)

PERMITTEE NAME/ADDRESS (Include Facility Name/Location if different)

NATIONAL POLLUTANT DISCHARGE ELIMINATION SYSTEM (NPDES)
DISCHARGE MONITORING REPORT (DMR)

NAME: CITY OF HOUSTON
ADDRESS: DEPT OF PUBLIC WORKS & ENGINEERING
P O BOX 262549
HOUSTON TX 77207-2549
FACILITY: FOREST COVE
LOCATION:

PERMIT NUMBER: TX0115924
DISCHARGE NUMBER: 001 A

MINOR
F - FINAL
DOMESTIC FACILITY-001

MONITORING PERIOD

FROM YEAR	MO	DAY	TO YEAR	MO	DAY
08	10	01	08	10	31

☐ Check here if No Discharge

NOTE: Read instructions before completing this form.

PARAMETER		QUANTITY OR LOADING AVERAGE	QUANTITY OR LOADING MAXIMUM	QUANTITY OR LOADING UNITS	QUALITY OR CONCENTRATION MINIMUM	QUALITY OR CONCENTRATION AVERAGE	QUALITY OR CONCENTRATION MAXIMUM	QUALITY OR CONCENTRATION UNITS	NO. EX	FREQUENCY OF ANALYSIS	SAMPLE TYPE
OXYGEN, DISSOLVED (DO) 00300 1 0 0 EFFLUENT GROSS VALUE	SAMPLE MEASUREMENT	******	******		7.2	******	******		0	WEEKLY	GRAB
	PERMIT REQUIREMENT	******	******	**** ****	4.0 MO MIN	******	******	(19) MG/L		WEEKLY	GRAB
pH 00400 1 0 0 EFFLUENT GROSS VALUE	SAMPLE MEASUREMENT	******	******		7.2	******	7.5		0	WEEKLY	GRAB
	PERMIT REQUIREMENT	******	******	**** ****	6.0 MINIMUM	******	9.0 MAXIMUM	(12) SU		TWICE/ MONTH	GRAB
SOLIDS, TOTAL SUSPENDED 00530 1 0 0 EFFLUENT GROSS VALUE	SAMPLE MEASUREMENT	5	******		******	2	2		0	WEEKLY	COMPOS
	PERMIT REQUIREMENT	119 DAILY AV	******	(26) LBS/DY	******	15 DAILY AV	40 DAILY MX	(19) MG/L		WEEKLY	COMPOS
NITROGEN, AMMONIA TOTAL (AS N) 00610 1 0 0 EFFLUENT GROSS VALUE	SAMPLE MEASUREMENT	0.9	******		******	0.3	1.0		0	WEEKLY	COMPOS
	PERMIT REQUIREMENT	24 DAILY AV	******	(26) LBS/DY	******	3 DAILY AV	10 DAILY MX	(19) MG/L		WEEKLY	COMPOS
FLOW, IN CONDUIT OR THRU TREATMENT PLANT 50050 1 0 0 EFFLUENT GROSS VALUE	SAMPLE MEASUREMENT	0.351	1.396		******	******	******		0	CONTIN UOUS	TOTALZ
	PERMIT REQUIREMENT	0.95 DAILY AV	REPORT DAILY MX	(03) MGD	******	******	******	**** ****		CONTIN UOUS	TOTALZ
COLIFORM, FECAL GENERAL 74055 1 0 0 EFFLUENT GROSS VALUE	SAMPLE MEASUREMENT	******	******		******	14	14		0	DAILY	GRAB
	PERMIT REQUIREMENT	******	******	**** ****	******	200 DAILY AV	400 7 DA AVG	(13) #/100ML		DAILY	GRAB
BOD, CARBONACEOUS 05 DAY, 20C 80082 1 0 0 EFFLUENT GROSS VALUE	SAMPLE MEASUREMENT	4	******		******	2	2		0	WEEKLY	COMPOS
	PERMIT REQUIREMENT	79 DAILY AV	******	(26) LBS/DY	******	10 DAILY AV	25 DAILY MX	(19) MG/L		WEEKLY	COMPOS

NAME/TITLE PRINCIPAL EXECUTIVE OFFICER

JUN CHANG
DEPUTY DIRECTOR

TYPED OR PRINTED

I certify under penalty of law that this document and all attachments were prepared under my direction or supervision in accordance with a system designed to assure that qualified personnel properly gather and evaluate the information submitted. Based on my inquiry of the person or persons who manage the system, or those persons directly responsible for gathering the information, the information submitted is, to the best of my knowledge and belief, true, accurate and complete. I am aware that there are significant penalties for submitting false information, including the possibility of fine and imprisonment for knowing violations. See 18 U.S.C. § 1001 and 33 USC § 1319. (Penalties under these statutes may include fines up to $10,000 and/or maximum imprisonment of between 6 months and 5 years.)

SIGNATURE OF PRINCIPAL EXECUTIVE OFFICER OR AUTHORIZED AGENT

TELEPHONE AREA	NUMBER	DATE YEAR	MO	DAY
281	575-2824	09	10	07

COMMENT AND EXPLANATIONS OF ANY VIOLATIONS (Reference all attachments here)

PERMITTEE NAME/ADDRESS (Include Facility Name/Location if different)

NATIONAL POLLUTANT DISCHARGE ELIMINATION SYSTEM (NPDES)
DISCHARGE MONITORING REPORT (DMR)

NAME: CITY OF HOUSTON
ADDRESS: DEPT OF PUBLIC WORKS & ENGINEERING
P O BOX 262549
HOUSTON TX 77207-2549
FACILITY: FOREST COVE
LOCATION:

PERMIT NUMBER: TX0115924
DISCHARGE NUMBER: 001 A

MINOR
F - FINAL
DOMESTIC FACILITY-001

MONITORING PERIOD

FROM YEAR	MO	DAY	TO YEAR	MO	DAY
08	11	01	08	11	30

☐ Check here if No Discharge

NOTE: Read instructions before completing this form.

PARAMETER		QUANTITY OR LOADING AVERAGE	QUANTITY OR LOADING MAXIMUM	QUANTITY OR LOADING UNITS	QUALITY OR CONCENTRATION MINIMUM	QUALITY OR CONCENTRATION AVERAGE	QUALITY OR CONCENTRATION MAXIMUM	QUALITY OR CONCENTRATION UNITS	NO. EX.	FREQUENCY OF ANALYSIS	SAMPLE TYPE
OXYGEN, DISSOLVED (DO) 00300 1 0 0 EFFLUENT GROSS VALUE	SAMPLE MEASUREMENT	******	******		7.1	******	******		0	WEEKLY	GRAB
	PERMIT REQUIREMENT	******	******	**** ****	4.0 MO MIN	******	******	(19) MG/L		WEEKLY	GRAB
pH 00400 1 0 0 EFFLUENT GROSS VALUE	SAMPLE MEASUREMENT	******	******		7.1	******	7.5		0	WEEKLY	GRAB
	PERMIT REQUIREMENT	******	******	**** ****	6.0 MINIMUM	******	9.0 MAXIMUM	(12) SU		TWICE/ MONTH	GRAB
SOLIDS, TOTAL SUSPENDED 00530 1 0 0 EFFLUENT GROSS VALUE	SAMPLE MEASUREMENT	8	******		******	2	2		0	WEEKLY	COMPOS
	PERMIT REQUIREMENT	119 DAILY AV	******	(26) LBS/DY	******	15 DAILY AV	40 DAILY MX	(19) MG/L		WEEKLY	COMPOS
NITROGEN, AMMONIA TOTAL (AS N) 00610 1 0 0 EFFLUENT GROSS VALUE	SAMPLE MEASUREMENT	1.3	******		******	0.2	0.5		0	WEEKLY	COMPOS
	PERMIT REQUIREMENT	24 DAILY AV	******	(26) LBS/DY	******	3 DAILY AV	10 DAILY MX	(19) MG/L		WEEKLY	COMPOS
FLOW, IN CONDUIT OR THRU TREATMENT PLANT 50050 1 0 0 EFFLUENT GROSS VALUE	SAMPLE MEASUREMENT	0.346	1.033		******	******	******		0	CONTIN UOUS	TOTALZ
	PERMIT REQUIREMENT	0.95 DAILY AV	REPORT DAILY MX	(03) MGD	******	******	******	**** ****		CONTIN UOUS	TOTALZ
COLIFORM, FECAL GENERAL 74055 1 0 0 EFFLUENT GROSS VALUE	SAMPLE MEASUREMENT	******	******		******	14	16		0	DAILY	GRAB
	PERMIT REQUIREMENT	******	******	**** ****	******	200 DAILY AV	400 7 DA AVG	(13) #/100ML		DAILY	GRAB
BOD, CARBONACEOUS 05 DAY, 20C 80082 1 0 0 EFFLUENT GROSS VALUE	SAMPLE MEASUREMENT	13	******		******	3	4		0	WEEKLY	COMPOS
	PERMIT REQUIREMENT	79 DAILY AV	******	(26) LBS/DY	******	10 DAILY AV	25 DAILY MX	(19) MG/L		WEEKLY	COMPOS

NAME/TITLE PRINCIPAL EXECUTIVE OFFICER

JUN CHANG
DEPUTY DIRECTOR

TYPED OR PRINTED

I certify under penalty of law that this document and all attachments were prepared under my direction or supervision in accordance with a system designed to assure that qualified personnel properly gather and evaluate the information submitted. Based on my inquiry of the person or persons who manage the system, or those persons directly responsible for gathering the information, the information submitted is, to the best of my knowledge and belief, true, accurate and complete. I am aware that there are significant penalties for submitting false information, including the possibility of fine and imprisonment for knowing violations. See 18 U.S.C. § 1001 and 33 USC § 1319. (Penalties under these statutes may include fines up to $10,000 and/or maximum imprisonment of between 6 months and 5 years.)

SIGNATURE OF PRINCIPAL EXECUTIVE OFFICER OR AUTHORIZED AGENT

TELEPHONE AREA	TELEPHONE NUMBER	DATE YEAR	DATE MO	DATE DAY
281	575-2824	09	10	07

COMMENT AND EXPLANATIONS OF ANY VIOLATIONS

(Reference all attachments here)

PERMITTEE NAME/ADDRESS (Include Facility Name/Location if different)

NATIONAL POLLUTANT DISCHARGE ELIMINATION SYSTEM (NPDES)
DISCHARGE MONITORING REPORT (DMR)

NAME: CITY OF HOUSTON
ADDRESS: DEPT OF PUBLIC WORKS & ENGINEERING
P O BOX 262549
HOUSTON TX 77207-2549
FACILITY: FOREST COVE
LOCATION:

TX0115924 — PERMIT NUMBER
001 A — DISCHARGE NUMBER

MINOR
F - FINAL
DOMESTIC FACILITY-001

☐ Check here if No Discharge

MONITORING PERIOD	YEAR	MO	DAY		YEAR	MO	DAY
FROM	08	12	01	TO	08	12	31

NOTE: Read instructions before completing this form.

PARAMETER		QUANTITY OR LOADING			QUALITY OR CONCENTRATION				NO EX	FREQUENCY OF ANALYSIS	SAMPLE TYPE
		AVERAGE	MAXIMUM	UNITS	MINIMUM	AVERAGE	MAXIMUM	UNITS			
OXYGEN, DISSOLVED (DO) 00300 1 0 0 EFFLUENT GROSS VALUE	SAMPLE MEASUREMENT	******	******		7.1	******	******		0	WEEKLY	GRAB
	PERMIT REQUIREMENT	******	******	**** ****	4.0 MO MIN	******	******	(19) MG/L		WEEKLY	GRAB
pH 00400 1 0 0 EFFLUENT GROSS VALUE	SAMPLE MEASUREMENT	******	******		7.1	******	7.5		0	WEEKLY	GRAB
	PERMIT REQUIREMENT	******	******	**** ****	6.0 MINIMUM	******	9.0 MAXIMUM	(12) SU		TWICE/ MONTH	GRAB
SOLIDS, TOTAL SUSPENDED 00530 1 0 0 EFFLUENT GROSS VALUE	SAMPLE MEASUREMENT	7	******		******	2	4		0	WEEKLY	COMPOS
	PERMIT REQUIREMENT	119 DAILY AV	******	(26) LBS/DY	******	15 DAILY AV	40 DAILY MX	(19) MG/L		WEEKLY	COMPOS
NITROGEN, AMMONIA TOTAL (AS N) 00610 1 0 0 EFFLUENT GROSS VALUE	SAMPLE MEASUREMENT	0.3	******		******	0.1	0.2		0	WEEKLY	COMPOS
	PERMIT REQUIREMENT	24 DAILY AV	******	(26) LBS/DY	******	3 DAILY AV	10 DAILY MX	(19) MG/L		WEEKLY	COMPOS
FLOW, IN CONDUIT OR THRU TREATMENT PLANT 50050 1 0 0 EFFLUENT GROSS VALUE	SAMPLE MEASUREMENT	0.290	0.528		******	******	******		0	CONTIN UOUS	TOTALZ
	PERMIT REQUIREMENT	0.95 DAILY AV	REPORT DAILY MX	(03) MGD	******	******	******	**** ****		CONTIN UOUS	TOTALZ
COLIFORM, FECAL GENERAL 74055 1 0 0 EFFLUENT GROSS VALUE	SAMPLE MEASUREMENT	******	******		******	14	16		0	DAILY	GRAB
	PERMIT REQUIREMENT	******	******	**** ****	******	200 DAILY AV	400 7 DA AVG	(13) #/100ML		DAILY	GRAB
BOD, CARBONACEOUS 05 DAY, 20C 80082 1 0 0 EFFLUENT GROSS VALUE	SAMPLE MEASUREMENT	3	******		******	1	1		0	WEEKLY	COMPOS
	PERMIT REQUIREMENT	79 DAILY AV	******	(26) LBS/DY	******	10 DAILY AV	25 DAILY MX	(19) MG/L		WEEKLY	COMPOS

NAME/TITLE PRINCIPAL EXECUTIVE OFFICER

JUN CHANG
DEPUTY DIRECTOR

TYPED OR PRINTED

I certify under penalty of law that this document and all attachments were prepared under my direction or supervision in accordance with a system designed to assure that qualified personnel properly gather and evaluate the information submitted. Based on my inquiry of the person or persons who manage the system, or those persons directly responsible for gathering the information, the information submitted is, to the best of my knowledge and belief, true, accurate and complete. I am aware that there are significant penalties for submitting false information, including the possibility of fine and imprisonment for knowing violations. See 18 U.S.C. § 1001 and 33 USC § 1319. (Penalties under these statutes may include fines up to $10,000 and/or imprisonment/confinement of between 6 months and 5 years.)

SIGNATURE OF PRINCIPAL EXECUTIVE OFFICER OR AUTHORIZED AGENT

TELEPHONE		DATE		
281	575-2824	09	10	07
AREA	NUMBER	YEAR	MO	DAY

COMMENT AND EXPLANATIONS OF ANY VIOLATIONS (Reference all attachments here)

PERMITTEE NAME/ADDRESS (Include Facility Name/Location if different)

NATIONAL POLLUTANT DISCHARGE ELIMINATION SYSTEM (NPDES)
DISCHARGE MONITORING REPORT (DMR)

NAME: CITY OF HOUSTON
ADDRESS: DEPT OF PUBLIC WORKS & ENGINEERING
P O BOX 262549
HOUSTON TX 77207-2549
FACILITY: FOREST COVE
LOCATION:

PERMIT NUMBER: TX0115924

DISCHARGE NUMBER: 001 A

MINOR

F - FINAL
DOMESTIC FACILITY-001

☐ Check here if No Discharge

MONITORING PERIOD	YEAR	MO	DAY		YEAR	MO	DAY
FROM	09	01	01	TO	09	01	31

NOTE: Read instructions before completing this form.

PARAMETER		QUANTITY OR LOADING AVERAGE	QUANTITY OR LOADING MAXIMUM	QUANTITY OR LOADING UNITS	QUALITY OR CONCENTRATION MINIMUM	QUALITY OR CONCENTRATION AVERAGE	QUALITY OR CONCENTRATION MAXIMUM	QUALITY OR CONCENTRATION UNITS	NO. EX	FREQUENCY OF ANALYSIS	SAMPLE TYPE
OXYGEN, DISSOLVED (DO) 00300 1 0 0 EFFLUENT GROSS VALUE	SAMPLE MEASUREMENT	******	******		7.2	******	******		0	WEEKLY	GRAB
	PERMIT REQUIREMENT	******	******	**** ****	4.0 MO MIN	******	******	(19) MG/L		WEEKLY	GRAB
pH 00400 1 0 0 EFFLUENT GROSS VALUE	SAMPLE MEASUREMENT	******	******		7.2	******	7.5		0	WEEKLY	GRAB
	PERMIT REQUIREMENT	******	******	**** ****	6.0 MINIMUM	******	9.0 MAXIMUM	(12) SU		TWICE/ MONTH	GRAB
SOLIDS, TOTAL SUSPENDED 00530 1 0 0 EFFLUENT GROSS VALUE	SAMPLE MEASUREMENT	5	******		******	2	3		0	WEEKLY	COMPOS
	PERMIT REQUIREMENT	119 DAILY AV	******	(26) LBS/DY	******	15 DAILY AV	40 DAILY MX	(19) MG/L		WEEKLY	COMPOS
NITROGEN, AMMONIA TOTAL (AS N) 00610 1 0 0 EFFLUENT GROSS VALUE	SAMPLE MEASUREMENT	0.3	******		******	0.1	0.2		0	WEEKLY	COMPOS
	PERMIT REQUIREMENT	24 DAILY AV	******	(26) LBS/DY	******	3 DAILY AV	10 DAILY MX	(19) MG/L		WEEKLY	COMPOS
FLOW, IN CONDUIT OR THRU TREATMENT PLANT 50050 1 0 0 EFFLUENT GROSS VALUE	SAMPLE MEASUREMENT	0.264	0.419		******	******	******		0	CONTIN UOUS	TOTALZ
	PERMIT REQUIREMENT	0.95 DAILY AV	REPORT DAILY MX	(03) MGD	******	******	******	**** ****		CONTIN UOUS	TOTALZ
COLIFORM, FECAL GENERAL 74055 1 0 0 EFFLUENT GROSS VALUE	SAMPLE MEASUREMENT	******	******		******	14	14		0	DAILY	GRAB
	PERMIT REQUIREMENT	******	******	**** ****	******	200 DAILY AV	400 7 DA AVG	(13) #/100ML		DAILY	GRAB
BOD, CARBONACEOUS 05 DAY, 20C 80082 1 0 0 EFFLUENT GROSS VALUE	SAMPLE MEASUREMENT	2	******		******	1	2		0	WEEKLY	COMPOS
	PERMIT REQUIREMENT	79 DAILY AV	******	(26) LBS/DY	******	10 DAILY AV	25 DAILY MX	(19) MG/L		WEEKLY	COMPOS

NAME/TITLE PRINCIPAL EXECUTIVE OFFICER

JUN CHANG
DEPUTY DIRECTOR

TYPED OR PRINTED

I certify under penalty of law that this document and all attachments were prepared under my direction or supervision in accordance with a system designed to assure that qualified personnel properly gather and evaluate the information submitted. Based on my inquiry of the person or persons who manage the system, or those persons directly responsible for gathering the information, the information submitted is, to the best of my knowledge and belief, true, accurate and complete. I am aware that there are significant penalties for submitting false information, including the possibility of fine and imprisonment for knowing violations. See 18 U.S.C. § 1001 and 33 USC § 1319. (Penalties under these statutes may include fines up to $10,000 and/or maximum imprisonment of between 6 months and 5 years.)

SIGNATURE OF PRINCIPAL EXECUTIVE OFFICER OR AUTHORIZED AGENT

TELEPHONE AREA	TELEPHONE NUMBER	DATE YEAR	DATE MO	DATE DAY
281	575-2824	09	10	07

COMMENT AND EXPLANATIONS OF ANY VIOLATIONS (Reference all attachments here)

PERMITTEE NAME/ADDRESS (Include Facility Name/Location if different)

NAME: CITY OF HOUSTON
ADDRESS: DEPT OF PUBLIC WORKS & ENGINEERING
P O BOX 262549
HOUSTON TX 77207-2549
FACILITY: FOREST COVE
LOCATION:

NATIONAL POLLUTANT DISCHARGE ELIMINATION SYSTEM (NPDES)
DISCHARGE MONITORING REPORT (DMR)

PERMIT NUMBER: TX0115924
DISCHARGE NUMBER: 001 A

MINOR
F - FINAL
DOMESTIC FACILITY-001

☐ Check here if No Discharge

MONITORING PERIOD

FROM YEAR	MO	DAY	TO YEAR	MO	DAY
09	02	01	09	02	28

NOTE: Read instructions before completing this form.

PARAMETER		QUANTITY OR LOADING AVERAGE	QUANTITY OR LOADING MAXIMUM	QUANTITY OR LOADING UNITS	QUALITY OR CONCENTRATION MINIMUM	QUALITY OR CONCENTRATION AVERAGE	QUALITY OR CONCENTRATION MAXIMUM	QUALITY OR CONCENTRATION UNITS	NO. EX	FREQUENCY OF ANALYSIS	SAMPLE TYPE
OXYGEN, DISSOLVED (DO) 00300 1 0 0 EFFLUENT GROSS VALUE	SAMPLE MEASUREMENT	******	******		7.1	******	******		0	WEEKLY	GRAB
	PERMIT REQUIREMENT	******	******	**** ****	4.0 MO MIN	******	******	(19) MG/L		WEEKLY	GRAB
pH 00400 1 0 0 EFFLUENT GROSS VALUE	SAMPLE MEASUREMENT	******	******		7.3	******	7.4		0	WEEKLY	GRAB
	PERMIT REQUIREMENT	******	******	**** ****	6.0 MINIMUM	******	9.0 MAXIMUM	(12) SU		TWICE/ MONTH	GRAB
SOLIDS, TOTAL SUSPENDED 00530 1 0 0 EFFLUENT GROSS VALUE	SAMPLE MEASUREMENT	4	******		******	2	2		0	WEEKLY	COMPOS
	PERMIT REQUIREMENT	119 DAILY AV	******	(26) LBS/DY	******	15 DAILY AV	40 DAILY MX	(19) MG/L		WEEKLY	COMPOS
NITROGEN, AMMONIA TOTAL (AS N) 00610 1 0 0 EFFLUENT GROSS VALUE	SAMPLE MEASUREMENT	0.3	******		******	0.1	0.2		0	WEEKLY	COMPOS
	PERMIT REQUIREMENT	24 DAILY AV	******	(26) LBS/DY	******	3 DAILY AV	10 DAILY MX	(19) MG/L		WEEKLY	COMPOS
FLOW, IN CONDUIT OR THRU TREATMENT PLANT 50050 1 0 0 EFFLUENT GROSS VALUE	SAMPLE MEASUREMENT	0.267	0.384		******	******	******		0	CONTIN UOUS	TOTALZ
	PERMIT REQUIREMENT	0.95 DAILY AV	REPORT DAILY MX	(03) MGD	******	******	******	**** ****		CONTIN UOUS	TOTALZ
COLIFORM, FECAL GENERAL 74055 1 0 0 EFFLUENT GROSS VALUE	SAMPLE MEASUREMENT	******	******		******	15	16		0	DAILY	GRAB
	PERMIT REQUIREMENT	******	******	**** ****	******	200 DAILY AV	400 7 DA AVG	(13) #/100ML		DAILY	GRAB
BOD, CARBONACEOUS 05 DAY, 20C 80082 1 0 0 EFFLUENT GROSS VALUE	SAMPLE MEASUREMENT	4	******		******	2	5		0	WEEKLY	COMPOS
	PERMIT REQUIREMENT	79 DAILY AV	******	(26) LBS/DY	******	10 DAILY AV	25 DAILY MX	(19) MG/L		WEEKLY	COMPOS

NAME/TITLE PRINCIPAL EXECUTIVE OFFICER

JUN CHANG
DEPUTY DIRECTOR

TYPED OR PRINTED

I certify under penalty of law that this document and all attachments were prepared under my direction or supervision in accordance with a system designed to assure that qualified personnel properly gather and evaluate the information submitted. Based on my inquiry of the person or persons who manage the system, or those persons directly responsible for gathering the information, the information submitted is, to the best of my knowledge and belief, true, accurate and complete. I am aware that there are significant penalties for submitting false information, including the possibility of fine and imprisonment for knowing violations. See 18 U.S.C. § 1001 and 33 USC § 1319. (Penalties under these statutes may include fines up to $10,000 and/or maximum imprisonment of between 6 months and 5 years.)

SIGNATURE OF PRINCIPAL EXECUTIVE OFFICER OR AUTHORIZED AGENT

TELEPHONE AREA	NUMBER	DATE YEAR	MO	DAY
281	575-2824	09	10	07

COMMENT AND EXPLANATIONS OF ANY VIOLATIONS (Reference all attachments here)

PERMITTEE NAME/ADDRESS (Include Facility Name/Location if different)

NATIONAL POLLUTANT DISCHARGE ELIMINATION SYSTEM (NPDES)
DISCHARGE MONITORING REPORT (DMR)

NAME: CITY OF HOUSTON
ADDRESS: DEPT OF PUBLIC WORKS & ENGINEERING
P O BOX 262549
HOUSTON TX 77207-2549
FACILITY: FOREST COVE
LOCATION:

PERMIT NUMBER: TX0115924
DISCHARGE NUMBER: 001 A

MINOR
F - FINAL
DOMESTIC FACILITY-001

☐ Check here if No Discharge

MONITORING PERIOD

FROM YEAR	MO	DAY	TO YEAR	MO	DAY
09	03	01	09	03	31

NOTE: Read instructions before completing this form.

PARAMETER		QUANTITY OR LOADING AVERAGE	MAXIMUM	UNITS	QUALITY OR CONCENTRATION MINIMUM	AVERAGE	MAXIMUM	UNITS	NO. EX	FREQUENCY OF ANALYSIS	SAMPLE TYPE
OXYGEN, DISSOLVED (DO) 00300 1 0 0 EFFLUENT GROSS VALUE	SAMPLE MEASUREMENT	******	******		7.1	******	******		0	WEEKLY	GRAB
	PERMIT REQUIREMENT	******	******	**** ****	4.0 MO MIN	******	******	(19) MG/L		WEEKLY	GRAB
pH 00400 1 0 0 EFFLUENT GROSS VALUE	SAMPLE MEASUREMENT	******	******		7.2	******	7.5		0	WEEKLY	GRAB
	PERMIT REQUIREMENT	******	******	**** ****	6.0 MINIMUM	******	9.0 MAXIMUM	(12) SU		TWICE/ MONTH	GRAB
SOLIDS, TOTAL SUSPENDED 00530 1 0 0 EFFLUENT GROSS VALUE	SAMPLE MEASUREMENT	4	******		******	2	2		0	WEEKLY	COMPOS
	PERMIT REQUIREMENT	119 DAILY AV	******	(26) LBS/DY	******	15 DAILY AV	40 DAILY MX	(19) MG/L		WEEKLY	COMPOS
NITROGEN, AMMONIA TOTAL (AS N) 00610 1 0 0 EFFLUENT GROSS VALUE	SAMPLE MEASUREMENT	0.4	******		******	0.2	0.4		0	WEEKLY	COMPOS
	PERMIT REQUIREMENT	24 DAILY AV	******	(26) LBS/DY	******	3 DAILY AV	10 DAILY MX	(19) MG/L		WEEKLY	COMPOS
FLOW, IN CONDUIT OR THRU TREATMENT PLANT 50050 1 0 0 EFFLUENT GROSS VALUE	SAMPLE MEASUREMENT	0.302	0.612		******	******	******		0	CONTIN UOUS	TOTALZ
	PERMIT REQUIREMENT	0.95 DAILY AV	REPORT DAILY MX	(03) MGD	******	******	******	**** ****		CONTIN UOUS	TOTALZ
COLIFORM, FECAL GENERAL 74055 1 0 0 EFFLUENT GROSS VALUE	SAMPLE MEASUREMENT	******	******		******	15	16		0	DAILY	GRAB
	PERMIT REQUIREMENT	******	******	**** ****	******	200 DAILY AV	400 7 DA AVG	(13) #/100ML		DAILY	GRAB
BOD, CARBONACEOUS 05 DAY, 20C 80082 1 0 0 EFFLUENT GROSS VALUE	SAMPLE MEASUREMENT	3	******		******	2	4		0	WEEKLY	COMPOS
	PERMIT REQUIREMENT	79 DAILY AV	******	(26) LBS/DY	******	10 DAILY AV	25 DAILY MX	(19) MG/L		WEEKLY	COMPOS

NAME/TITLE PRINCIPAL EXECUTIVE OFFICER

JUN CHANG
DEPUTY DIRECTOR

TYPED OR PRINTED

I certify under penalty of law that this document and all attachments were prepared under my direction or supervision in accordance with a system designed to assure that qualified personnel properly gather and evaluate the information submitted. Based on my inquiry of the person or persons who manage the system, or those persons directly responsible for gathering the information, the information submitted is, to the best of my knowledge and belief, true, accurate and complete. I am aware that there are significant penalties for submitting false information, including the possibility of fine and imprisonment for knowing violations. See 18 U.S.C. § 1001 and 33 USC § 1319. (Penalties under these statutes may include fines up to $10,000 and/or imprisonment of between 6 months and 5 years.)

SIGNATURE OF PRINCIPAL EXECUTIVE OFFICER OR AUTHORIZED AGENT

TELEPHONE AREA	NUMBER	DATE YEAR	MO	DAY
281	575-2824	09	10	07

COMMENT AND EXPLANATIONS OF ANY VIOLATIONS (Reference all attachments here)

PERMITTEE NAME/ADDRESS (Include Facility Name/Location if different)

NATIONAL POLLUTANT DISCHARGE ELIMINATION SYSTEM (NPDES)
DISCHARGE MONITORING REPORT (DMR)

NAME: CITY OF HOUSTON
ADDRESS: DEPT OF PUBLIC WORKS & ENGINEERING
P O BOX 262549
HOUSTON TX 77207-2549
FACILITY: FOREST COVE
LOCATION:

TX0115924 — PERMIT NUMBER
001 A — DISCHARGE NUMBER

MINOR
F - FINAL
DOMESTIC FACILITY-001

MONITORING PERIOD

FROM YEAR	MO	DAY	TO YEAR	MO	DAY
09	04	01	09	04	30

☐ Check here if No Discharge

NOTE: Read instructions before completing this form.

PARAMETER		QUANTITY OR LOADING AVERAGE	QUANTITY OR LOADING MAXIMUM	UNITS	QUALITY OR CONCENTRATION MINIMUM	QUALITY OR CONCENTRATION AVERAGE	QUALITY OR CONCENTRATION MAXIMUM	UNITS	NO. EX	FREQUENCY OF ANALYSIS	SAMPLE TYPE
OXYGEN, DISSOLVED (DO) 00300 1 0 0 EFFLUENT GROSS VALUE	SAMPLE MEASUREMENT	******	******		7.4	******	******		0	WEEKLY	GRAB
	PERMIT REQUIREMENT	******	******	**** ****	4.0 MO MIN	******	******	(19) MG/L		WEEKLY	GRAB
pH 00400 1 0 0 EFFLUENT GROSS VALUE	SAMPLE MEASUREMENT	******	******		7.1	******	7.4		0	WEEKLY	GRAB
	PERMIT REQUIREMENT	******	******	**** ****	6.0 MINIMUM	******	9.0 MAXIMUM	(12) SU		TWICE/ MONTH	GRAB
SOLIDS, TOTAL SUSPENDED 00530 1 0 0 EFFLUENT GROSS VALUE	SAMPLE MEASUREMENT	24	******		******	3	5		0	WEEKLY	COMPOS
	PERMIT REQUIREMENT	119 DAILY AV	******	(26) LBS/DY	******	15 DAILY AV	40 DAILY MX	(19) MG/L		WEEKLY	COMPOS
NITROGEN, AMMONIA TOTAL (AS N) 00610 1 0 0 EFFLUENT GROSS VALUE	SAMPLE MEASUREMENT	1.2	******		******	0.3	0.7		0	WEEKLY	COMPOS
	PERMIT REQUIREMENT	24 DAILY AV	******	(26) LBS/DY	******	3 DAILY AV	10 DAILY MX	(19) MG/L		WEEKLY	COMPOS
FLOW, IN CONDUIT OR THRU TREATMENT PLANT 50050 1 0 0 EFFLUENT GROSS VALUE	SAMPLE MEASUREMENT	0.443	1.935		******	******	******		0	CONTIN UOUS	TOTALZ
	PERMIT REQUIREMENT	0.95 DAILY AV	REPORT DAILY MX	(03) MGD	******	******	******	**** ****		CONTIN UOUS	TOTALZ
COLIFORM, FECAL GENERAL 74055 1 0 0 EFFLUENT GROSS VALUE	SAMPLE MEASUREMENT	******	******		******	17	21		0	DAILY	GRAB
	PERMIT REQUIREMENT	******	******	**** ****	******	200 DAILY AV	400 7 DA AVG	(13) #/100ML		DAILY	GRAB
BOD, CARBONACEOUS 05 DAY, 20C 80082 1 0 0 EFFLUENT GROSS VALUE	SAMPLE MEASUREMENT	9	******		******	2	3		0	WEEKLY	COMPOS
	PERMIT REQUIREMENT	79 DAILY AV	******	(26) LBS/DY	******	10 DAILY AV	25 DAILY MX	(19) MG/L		WEEKLY	COMPOS

NAME/TITLE PRINCIPAL EXECUTIVE OFFICER: JUN CHANG, DEPUTY DIRECTOR

TYPED OR PRINTED

I certify under penalty of law that this document and all attachments were prepared under my direction or supervision in accordance with a system designed to assure that qualified personnel properly gather and evaluate the information submitted. Based on my inquiry of the person or persons who manage the system, or those persons directly responsible for gathering the information, the information submitted is, to the best of my knowledge and belief, true, accurate and complete. I am aware that there are significant penalties for submitting false information, including the possibility of fine and imprisonment for knowing violations. See 18 U.S.C. § 1001 and 33 USC § 1319. (Penalties under these statutes may include fines up to $10,000 and/or maximum imprisonment of between 6 months and 5 years.)

SIGNATURE OF PRINCIPAL EXECUTIVE OFFICER OR AUTHORIZED AGENT

TELEPHONE AREA	NUMBER	DATE YEAR	MO	DAY
281	575-2824	09	10	07

COMMENT AND EXPLANATIONS OF ANY VIOLATIONS (Reference all attachments here)

PERMITTEE NAME/ADDRESS (Include Facility Name/Location if different)

NATIONAL POLLUTANT DISCHARGE ELIMINATION SYSTEM (NPDES)
DISCHARGE MONITORING REPORT (DMR)

NAME: CITY OF HOUSTON
ADDRESS: DEPT OF PUBLIC WORKS & ENGINEERING
P O BOX 262549
HOUSTON TX 77207-2549
FACILITY: FOREST COVE
LOCATION:

PERMIT NUMBER: TX0115924
DISCHARGE NUMBER: 001 A

MINOR
F - FINAL
DOMESTIC FACILITY-001

☐ Check here if No Discharge

MONITORING PERIOD	YEAR	MO	DAY		YEAR	MO	DAY
FROM	09	05	01	TO	09	05	31

NOTE: Read instructions before completing this form.

PARAMETER		QUANTITY OR LOADING AVERAGE	QUANTITY OR LOADING MAXIMUM	QUANTITY OR LOADING UNITS	QUALITY OR CONCENTRATION MINIMUM	QUALITY OR CONCENTRATION AVERAGE	QUALITY OR CONCENTRATION MAXIMUM	QUALITY OR CONCENTRATION UNITS	NO. EX	FREQUENCY OF ANALYSIS	SAMPLE TYPE
OXYGEN, DISSOLVED (DO) 00300 1 0 0 EFFLUENT GROSS VALUE	SAMPLE MEASUREMENT	******	******		7.5	******	******		0	WEEKLY	GRAB
	PERMIT REQUIREMENT	******	******	**** ****	4.0 MO MIN	******	******	(19) MG/L		WEEKLY	GRAB
pH 00400 1 0 0 EFFLUENT GROSS VALUE	SAMPLE MEASUREMENT	******	******		7.3	******	7.6		0	WEEKLY	GRAB
	PERMIT REQUIREMENT	******	******	**** ****	6.0 MINIMUM	******	9.0 MAXIMUM	(12) SU		TWICE/ MONTH	GRAB
SOLIDS, TOTAL SUSPENDED 00530 1 0 0 EFFLUENT GROSS VALUE	SAMPLE MEASUREMENT	6	******		******	3	4		0	WEEKLY	COMPOS
	PERMIT REQUIREMENT	119 DAILY AV	******	(26) LBS/DY	******	15 DAILY AV	40 DAILY MX	(19) MG/L		WEEKLY	COMPOS
NITROGEN, AMMONIA TOTAL (AS N) 00610 1 0 0 EFFLUENT GROSS VALUE	SAMPLE MEASUREMENT	0.4	******		******	0.2	0.3		0	WEEKLY	COMPOS
	PERMIT REQUIREMENT	24 DAILY AV	******	(26) LBS/DY	******	3 DAILY AV	10 DAILY MX	(19) MG/L		WEEKLY	COMPOS
FLOW, IN CONDUIT OR THRU TREATMENT PLANT 50050 1 0 0 EFFLUENT GROSS VALUE	SAMPLE MEASUREMENT	0.278	0.358		******	******	******		0	CONTIN UOUS	TOTALZ
	PERMIT REQUIREMENT	0.95 DAILY AV	REPORT DAILY MX	(03) MGD	******	******	******	**** ****		CONTIN UOUS	TOTALZ
COLIFORM, FECAL GENERAL 74055 1 0 0 EFFLUENT GROSS VALUE	SAMPLE MEASUREMENT	******	******		******	16	26		0	DAILY	GRAB
	PERMIT REQUIREMENT	******	******	**** ****	******	200 DAILY AV	400 7 DA AVG	(13) #/100ML		DAILY	GRAB
BOD, CARBONACEOUS 05 DAY, 20C 80082 1 0 0 EFFLUENT GROSS VALUE	SAMPLE MEASUREMENT	4	******		******	2	4		0	WEEKLY	COMPOS
	PERMIT REQUIREMENT	79 DAILY AV	******	(26) LBS/DY	******	10 DAILY AV	25 DAILY MX	(19) MG/L		WEEKLY	COMPOS

NAME/TITLE PRINCIPAL EXECUTIVE OFFICER

JUN CHANG
DEPUTY DIRECTOR

TYPED OR PRINTED

I certify under penalty of law that this document and all attachments were prepared under my direction or supervision in accordance with a system designed to assure that qualified personnel properly gather and evaluate the information submitted. Based on my inquiry of the person or persons who manage the system, or those persons directly responsible for gathering the information, the information submitted is, to the best of my knowledge and belief, true, accurate and complete. I am aware that there are significant penalties for submitting false information, including the possibility of fine and imprisonment for knowing violations. See 18 U.S.C. § 1001 and 33 USC § 1319. (Penalties under these statutes may include fines up to $10,000 and/or maximum imprisonment of between 6 months and 5 years.)

SIGNATURE OF PRINCIPAL EXECUTIVE OFFICER OR AUTHORIZED AGENT

TELEPHONE AREA	TELEPHONE NUMBER	DATE YEAR	DATE MO	DATE DAY
281	575-2824	09	10	07

COMMENT AND EXPLANATIONS OF ANY VIOLATIONS

(Reference all attachments here)

PERMITTEE NAME/ADDRESS (Include Facility Name/Location if different)

NATIONAL POLLUTANT DISCHARGE ELIMINATION SYSTEM (NPDES)
DISCHARGE MONITORING REPORT (DMR)

NAME: CITY OF HOUSTON
ADDRESS: DEPT OF PUBLIC WORKS & ENGINEERING
P O BOX 262549
HOUSTON TX 77207-2549
FACILITY: FOREST COVE
LOCATION:

PERMIT NUMBER: TX0115924
DISCHARGE NUMBER: 001 A

MINOR
F - FINAL
DOMESTIC FACILITY-001

☐ Check here if No Discharge

MONITORING PERIOD

FROM YEAR	MO	DAY	TO YEAR	MO	DAY
09	06	01	09	06	30

NOTE: Read instructions before completing this form.

PARAMETER		QUANTITY OR LOADING AVERAGE	MAXIMUM	UNITS	QUALITY OR CONCENTRATION MINIMUM	AVERAGE	MAXIMUM	UNITS	NO. EX	FREQUENCY OF ANALYSIS	SAMPLE TYPE
OXYGEN, DISSOLVED (DO) 00300 1 0 0 EFFLUENT GROSS VALUE	SAMPLE MEASUREMENT	******	******		6.6	******	******		0	WEEKLY	GRAB
	PERMIT REQUIREMENT	******	******	**** ****	4.0 MO MIN	******	******	(19) MG/L		WEEKLY	GRAB
pH 00400 1 0 0 EFFLUENT GROSS VALUE	SAMPLE MEASUREMENT	******	******		7.2	******	7.5		0	WEEKLY	GRAB
	PERMIT REQUIREMENT	******	******	**** ****	6.0 MINIMUM	******	9.0 MAXIMUM	(12) SU		TWICE/ MONTH	GRAB
SOLIDS, TOTAL SUSPENDED 00530 1 0 0 EFFLUENT GROSS VALUE	SAMPLE MEASUREMENT	6	******		******	3	8		0	WEEKLY	COMPOS
	PERMIT REQUIREMENT	119 DAILY AV	******	(26) LBS/DY	******	15 DAILY AV	40 DAILY MX	(19) MG/L		WEEKLY	COMPOS
NITROGEN, AMMONIA TOTAL (AS N) 00610 1 0 0 EFFLUENT GROSS VALUE	SAMPLE MEASUREMENT	0.2	******		******	0.1	0.1		0	WEEKLY	COMPOS
	PERMIT REQUIREMENT	24 DAILY AV	******	(26) LBS/DY	******	3 DAILY AV	10 DAILY MX	(19) MG/L		WEEKLY	COMPOS
FLOW, IN CONDUIT OR THRU TREATMENT PLANT 50050 1 0 0 EFFLUENT GROSS VALUE	SAMPLE MEASUREMENT	0.257	0.326		******	******	******		0	CONTIN UOUS	TOTALZ
	PERMIT REQUIREMENT	0.95 DAILY AV	REPORT DAILY MX	(03) MGD	******	******	******	**** ****		CONTIN UOUS	TOTALZ
COLIFORM, FECAL GENERAL 74055 1 0 0 EFFLUENT GROSS VALUE	SAMPLE MEASUREMENT	******	******		******	15	14		0	DAILY	GRAB
	PERMIT REQUIREMENT	******	******	**** ****	******	200 DAILY AV	400 7 DA AVG	(13) #/100ML		DAILY	GRAB
BOD, CARBONACEOUS 05 DAY, 20C 80082 1 0 0 EFFLUENT GROSS VALUE	SAMPLE MEASUREMENT	4	******		******	2	3		0	WEEKLY	COMPOS
	PERMIT REQUIREMENT	79 DAILY AV	******	(26) LBS/DY	******	10 DAILY AV	25 DAILY MX	(19) MG/L		WEEKLY	COMPOS

NAME/TITLE PRINCIPAL EXECUTIVE OFFICER

JUN CHANG
DEPUTY DIRECTOR

TYPED OR PRINTED

I certify under penalty of law that this document and all attachments were prepared under my direction or supervision in accordance with a system designed to assure that qualified personnel properly gather and evaluate the information submitted. Based on my inquiry of the person or persons who manage the system, or those persons directly responsible for gathering the information, the information submitted is, to the best of my knowledge and belief, true, accurate and complete. I am aware that there are significant penalties for submitting false information, including the possibility of fine and imprisonment for knowing violations. See 18 U.S.C. § 1001 and 33 USC § 1319. (Penalties under these statutes may include fines up to $10,000 and/or maximum imprisonment of between 6 months and 5 years.)

SIGNATURE OF PRINCIPAL EXECUTIVE OFFICER OR AUTHORIZED AGENT

TELEPHONE AREA	NUMBER	DATE YEAR	MO	DAY
281	575-2824	09	10	07

COMMENT AND EXPLANATIONS OF ANY VIOLATIONS (Reference all attachments here)

PERMITTEE NAME/ADDRESS (Include Facility Name/Location if different)

NATIONAL POLLUTANT DISCHARGE ELIMINATION SYSTEM (NPDES)
DISCHARGE MONITORING REPORT (DMR)

NAME: CITY OF HOUSTON
ADDRESS: DEPT OF PUBLIC WORKS & ENGINEERING
P O BOX 262549
HOUSTON TX 77207-2549
FACILITY: FOREST COVE
LOCATION:

PERMIT NUMBER: TX0115924
DISCHARGE NUMBER: 001 A

MINOR
F - FINAL
DOMESTIC FACILITY-001

☐ Check here if No Discharge

MONITORING PERIOD

FROM YEAR	MO	DAY	TO YEAR	MO	DAY
09	07	01	09	07	31

NOTE: Read instructions before completing this form.

PARAMETER		QUANTITY OR LOADING AVERAGE	QUANTITY OR LOADING MAXIMUM	QUANTITY OR LOADING UNITS	QUALITY OR CONCENTRATION MINIMUM	QUALITY OR CONCENTRATION AVERAGE	QUALITY OR CONCENTRATION MAXIMUM	QUALITY OR CONCENTRATION UNITS	NO. EX	FREQUENCY OF ANALYSIS	SAMPLE TYPE
OXYGEN, DISSOLVED (DO) 00300 1 0 0 EFFLUENT GROSS VALUE	SAMPLE MEASUREMENT	******	******		7.1	******	******		0	WEEKLY	GRAB
	PERMIT REQUIREMENT	******	******	**** ****	4.0 MO MIN	******	******	(19) MG/L		WEEKLY	GRAB
pH 00400 1 0 0 EFFLUENT GROSS VALUE	SAMPLE MEASUREMENT	******	******		7.1	******	7.4		0	WEEKLY	GRAB
	PERMIT REQUIREMENT	******	******	**** ****	6.0 MINIMUM	******	9.0 MAXIMUM	(12) SU		TWICE/ MONTH	GRAB
SOLIDS, TOTAL SUSPENDED 00530 1 0 0 EFFLUENT GROSS VALUE	SAMPLE MEASUREMENT	18	******		******	3	8		0	WEEKLY	COMPOS
	PERMIT REQUIREMENT	119 DAILY AV	******	(26) LBS/DY	******	15 DAILY AV	40 DAILY MX	(19) MG/L		WEEKLY	COMPOS
NITROGEN, AMMONIA TOTAL (AS N) 00610 1 0 0 EFFLUENT GROSS VALUE	SAMPLE MEASUREMENT	1.5	******		******	0.3	0.7		0	WEEKLY	COMPOS
	PERMIT REQUIREMENT	24 DAILY AV	******	(26) LBS/DY	******	3 DAILY AV	10 DAILY MX	(19) MG/L		WEEKLY	COMPOS
FLOW, IN CONDUIT OR THRU TREATMENT PLANT 50050 1 0 0 EFFLUENT GROSS VALUE	SAMPLE MEASUREMENT	0.286	0.884		******	******	******		0	CONTIN UOUS	TOTALZ
	PERMIT REQUIREMENT	0.95 DAILY AV	REPORT DAILY MX	(03) MGD	******	******	******	**** ****		CONTIN UOUS	TOTALZ
COLIFORM, FECAL GENERAL 74055 1 0 0 EFFLUENT GROSS VALUE	SAMPLE MEASUREMENT	******	******		******	14	16		0	DAILY	GRAB
	PERMIT REQUIREMENT	******	******	**** ****	******	200 DAILY AV	400 7 DA AVG	(13) #/100ML		DAILY	GRAB
BOD, CARBONACEOUS 05 DAY, 20C 80082 1 0 0 EFFLUENT GROSS VALUE	SAMPLE MEASUREMENT	9	******		******	2	4		0	WEEKLY	COMPOS
	PERMIT REQUIREMENT	79 DAILY AV	******	(26) LBS/DY	******	10 DAILY AV	25 DAILY MX	(19) MG/L		WEEKLY	COMPOS

NAME/TITLE PRINCIPAL EXECUTIVE OFFICER

JUN CHANG
DEPUTY DIRECTOR

TYPED OR PRINTED

I certify under penalty of law that this document and all attachments were prepared under my direction or supervision in accordance with a system designed to assure that qualified personnel properly gather and evaluate the information submitted. Based on my inquiry of the person or persons who manage the system, or those persons directly responsible for gathering the information, the information submitted is, to the best of my knowledge and belief, true, accurate and complete. I am aware that there are significant penalties for submitting false information, including the possibility of fine and imprisonment for knowing violations. See 18 U.S.C. § 1001 and 33 USC § 1319. (Penalties under these statutes may include fines up to $10,000 and/or maximum imprisonment of between 2 months and 5 years.)

SIGNATURE OF PRINCIPAL EXECUTIVE OFFICER OR AUTHORIZED AGENT

TELEPHONE AREA	NUMBER	DATE YEAR	MO	DAY
281	575-2824	09	10	07

COMMENT AND EXPLANATIONS OF ANY VIOLATIONS (Reference all attachments here)

PERMITTEE NAME/ADDRESS (Include Facility Name/Location if different)

NATIONAL POLLUTANT DISCHARGE ELIMINATION SYSTEM (NPDES)
DISCHARGE MONITORING REPORT (DMR)

NAME: CITY OF HOUSTON
ADDRESS: DEPT OF PUBLIC WORKS & ENGINEERING
P O BOX 262549
HOUSTON TX 77207-2549
FACILITY: FOREST COVE
LOCATION:

PERMIT NUMBER: TX0115924
DISCHARGE NUMBER: 001 A

MINOR
F - FINAL
DOMESTIC FACILITY-001

☐ Check here if No Discharge

MONITORING PERIOD

FROM YEAR	MO	DAY	TO YEAR	MO	DAY
09	08	01	09	08	31

NOTE: Read instructions before completing this form.

PARAMETER		QUANTITY OR LOADING AVERAGE	QUANTITY OR LOADING MAXIMUM	QUANTITY OR LOADING UNITS	QUALITY OR CONCENTRATION MINIMUM	QUALITY OR CONCENTRATION AVERAGE	QUALITY OR CONCENTRATION MAXIMUM	QUALITY OR CONCENTRATION UNITS	NO. EX	FREQUENCY OF ANALYSIS	SAMPLE TYPE
OXYGEN, DISSOLVED (DO) 00300 1 0 0 EFFLUENT GROSS VALUE	SAMPLE MEASUREMENT	******	******		6.9	******	******		0	WEEKLY	GRAB
	PERMIT REQUIREMENT	******	******	**** ****	4.0 MO MIN	******	******	(19) MG/L		WEEKLY	GRAB
pH 00400 1 0 0 EFFLUENT GROSS VALUE	SAMPLE MEASUREMENT	******	******		7.0	******	7.3		0	WEEKLY	GRAB
	PERMIT REQUIREMENT	******	******	**** ****	6.0 MINIMUM	******	9.0 MAXIMUM	(12) SU		TWICE/ MONTH	GRAB
SOLIDS, TOTAL SUSPENDED 00530 1 0 0 EFFLUENT GROSS VALUE	SAMPLE MEASUREMENT	11	******		******	5	6		0	WEEKLY	COMPOS
	PERMIT REQUIREMENT	119 DAILY AV	******	(26) LBS/DY	******	15 DAILY AV	40 DAILY MX	(19) MG/L		WEEKLY	COMPOS
NITROGEN, AMMONIA TOTAL (AS N) 00610 1 0 0 EFFLUENT GROSS VALUE	SAMPLE MEASUREMENT	0.2	******		******	0.1	0.2		0	WEEKLY	COMPOS
	PERMIT REQUIREMENT	24 DAILY AV	******	(26) LBS/DY	******	3 DAILY AV	10 DAILY MX	(19) MG/L		WEEKLY	COMPOS
FLOW, IN CONDUIT OR THRU TREATMENT PLANT 50050 1 0 0 EFFLUENT GROSS VALUE	SAMPLE MEASUREMENT	0.275	0.360		******	******	******		0	CONTIN UOUS	TOTALZ
	PERMIT REQUIREMENT	0.95 DAILY AV	REPORT DAILY MX	(03) MGD	******	******	******	**** ****		CONTIN UOUS	TOTALZ
COLIFORM, FECAL GENERAL 74055 1 0 0 EFFLUENT GROSS VALUE	SAMPLE MEASUREMENT	******	******		******	14	14		0	DAILY	GRAB
	PERMIT REQUIREMENT	******	******	**** ****	******	200 DAILY AV	400 7 DA AVG	(13) #/100ML		DAILY	GRAB
BOD, CARBONACEOUS 05 DAY, 20C 80082 1 0 0 EFFLUENT GROSS VALUE	SAMPLE MEASUREMENT	6	******		******	3	8		0	WEEKLY	COMPOS
	PERMIT REQUIREMENT	79 DAILY AV	******	(26) LBS/DY	******	10 DAILY AV	25 DAILY MX	(19) MG/L		WEEKLY	COMPOS

NAME/TITLE PRINCIPAL EXECUTIVE OFFICER
JUN CHANG
DEPUTY DIRECTOR
TYPED OR PRINTED

I certify under penalty of law that this document and all attachments were prepared under my direction or supervision in accordance with a system designed to assure that qualified personnel properly gather and evaluate the information submitted. Based on my inquiry of the person or persons who manage the system, or those persons directly responsible for gathering the information, the information submitted is, to the best of my knowledge and belief, true, accurate and complete. I am aware that there are significant penalties for submitting false information, including the possibility of fine and imprisonment for knowing violations. See 18 U.S.C. § 1001 and 33 USC § 1319. (Penalties under these statutes may include fines up to $10,000 and or maximum imprisonment of between 6 months and 5 years.)

SIGNATURE OF PRINCIPAL EXECUTIVE OFFICER OR AUTHORIZED AGENT

TELEPHONE AREA	NUMBER	DATE YEAR	MO	DAY
281	575-2824	09	10	07

COMMENT AND EXPLANATIONS OF ANY VIOLATIONS (Reference all attachments here)

PERMITTEE NAME/ADDRESS (Include Facility Name/Location if different)

NATIONAL POLLUTANT DISCHARGE ELIMINATION SYSTEM (NPDES)
DISCHARGE MONITORING REPORT (DMR)

NAME: CITY OF HOUSTON
ADDRESS: KINGWOOD CENTRAL PLANT
4545 GROVEWAY
HOUSTON TX 77087-1122
FACILITY:
LOCATION:

PERMIT NUMBER: TX0066583
DISCHARGE NUMBER: 001 B

MAJOR
M - INTERIM II
TOTAL FACILITY DISCHARGE

☐ Check here if No Discharge

MONITORING PERIOD

	YEAR	MO	DAY		YEAR	MO	DAY
FROM	07	09	01	TO	07	09	30

NOTE: Read instructions before completing this form.

PARAMETER		QUANTITY OR LOADING			QUALITY OR CONCENTRATION				NO. EX	FREQUENCY OF ANALYSIS	SAMPLE TYPE
		AVERAGE	MAXIMUM	UNITS	MINIMUM	AVERAGE	MAXIMUM	UNITS			
OXYGEN, DISSOLVED (DO) 00300 1 0 0 EFFLUENT GROSS VALUE	SAMPLE MEASUREMENT	******	******		6.5	******	******		0	5TIMES /WEEK	GRAB
	PERMIT REQUIREMENT	******	******	**** ****	6.0 MO MIN	******	******	(19) MG/L		5TIMES /WEEK	GRAB
PH 00400 1 0 0 EFFLUENT GROSS VALUE	SAMPLE MEASUREMENT	******	******		7.2	******	7.8		0	5TIMES /WEEK	GRAB
	PERMIT REQUIREMENT	******	******	**** ****	6.0 MINIMUM	******	9.0 MAXIMUM	(12) SU		5TIMES /WEEK	GRAB
SOLIDS, TOTAL SUSPENDED 00530 1 0 0 EFFLUENT GROSS VALUE	SAMPLE MEASUREMENT	120	******		******	3	9		0	5TIMES /WEEK	COMPOS
	PERMIT REQUIREMENT	584 DAILY AV	******	(26) LBS/DY	******	10 DAILY AV	40 DAILY MX	(19) MG/L		5TIMES /WEEK	COMPOS
NITROGEN, AMMONIA TOTAL (AS N) 00610 1 0 0 EFFLUENT GROSS VALUE	SAMPLE MEASUREMENT	8.4	******		******	0.2	0.8		0	5TIMES /WEEK	COMPOS
	PERMIT REQUIREMENT	175 DAILY AV	******	(26) LBS/DY	******	3 DAILY AV	7 DAILY MX	(19) MG/L		5TIMES /WEEK	COMPOS
FLOW, IN CONDUIT OR THRU TREATMENT PLANT 50050 P 0 0 SEE COMMENTS BELOW	SAMPLE MEASUREMENT	******	7158		******	******	******		0	CONTIN UOUS	TOTALZ
	PERMIT REQUIREMENT	******	25678 2HR PEAK	(78) GPM	******	******	******	**** ****		CONTIN UOUS	TOTALZ
FLOW, IN CONDUIT OR THRU TREATMENT PLANT 50050 Y 0 0 ANNUAL AVERAGE	SAMPLE MEASUREMENT	4.915	******		******	******	******		0	CONTIN UOUS	TOTALZ
	PERMIT REQUIREMENT	7.0 ANNL AVG	******	(03) MGD	******	******	******	**** ****		CONTIN UOUS	TOTALZ
FLOW, IN CONDUIT OR THRU TREATMENT PLANT 50050 1 0 0 EFFLUENT GROSS VALUE	SAMPLE MEASUREMENT	4.603	5.404		******	******	******		0	CONTIN UOUS	TOTALZ
	PERMIT REQUIREMENT	REPORT DAILY AV	REPORT DAILY MX	(03) MGD	******	******	******	**** ****		CONTIN UOUS	TOTALZ

NAME/TITLE PRINCIPAL EXECUTIVE OFFICER

JUN CHANG
DEPUTY DIRECTOR

TYPED OR PRINTED

I certify under penalty of law that this document and all attachments were prepared under my direction or supervision in accordance with a system designed to assure that qualified personnel properly gather and evaluate the information submitted. Based on my inquiry of the person or persons who manage the system, or those persons directly responsible for gathering the information, the information submitted is, to the best of my knowledge and belief, true, accurate and complete. I am aware that there are significant penalties for submitting false information, including the possibility of fine and imprisonment for knowing violations. See 18 U.S.C. § 1001 and 33 USC § 1319. (Penalties under these statutes may include fines up to $10,000 and/or maximum imprisonment of between 6 months and 5 years.)

SIGNATURE OF PRINCIPAL EXECUTIVE OFFICER OR AUTHORIZED AGENT

TELEPHONE		DATE		
281	575-2824	09	10	07
AREA	NUMBER	YEAR	MO	DAY

COMMENT AND EXPLANATIONS OF ANY VIOLATIONS (Reference all attachments here)

PERMITTEE NAME/ADDRESS (Include Facility Name/Location if different)

NATIONAL POLLUTANT DISCHARGE ELIMINATION SYSTEM (NPDES)
DISCHARGE MONITORING REPORT (DMR)

NAME: CITY OF HOUSTON
ADDRESS: KINGWOOD CENTRAL PLANT
4545 GROVEWAY
HOUSTON TX 77087-1122
FACILITY
LOCATION

PERMIT NUMBER: TX0066583
DISCHARGE NUMBER: 001 B

MAJOR
M - INTERIM II
TOTAL FACILITY DISCHARGE

☐ Check here if No Discharge

MONITORING PERIOD	YEAR	MO	DAY		YEAR	MO	DAY
FROM	07	09	01	TO	07	09	30

NOTE: Read instructions before completing this form.

PARAMETER		QUANTITY OR LOADING AVERAGE	QUANTITY OR LOADING MAXIMUM	QUANTITY OR LOADING UNITS	QUALITY OR CONCENTRATION MINIMUM	QUALITY OR CONCENTRATION AVERAGE	QUALITY OR CONCENTRATION MAXIMUM	QUALITY OR CONCENTRATION UNITS	NO. EX	FREQUENCY OF ANALYSIS	SAMPLE TYPE
COLIFORM, FECAL GENERAL 74055 1 0 0 EFFLUENT GROSS VALUE	SAMPLE MEASUREMENT	******	******		******	19	65		0	DAILY	GRAB
	PERMIT REQUIREMENT	******	******	**** ****	******	200 DA GEOAV	400 7 DA GEO	(13) #/100ML		DAILY	GRAB
BOD, CARBONACEOUS 05 DAY, 20C 80082 1 0 0 EFFLUENT GROSS VALUE	SAMPLE MEASUREMENT	97	******		******	3	13		0	5TIMES /WEEK	COMPOS
	PERMIT REQUIREMENT	292 DAILY AV	******	(26) LBS/DY	******	5 DAILY AV	20 DAILY MX	(19) MG/L		5TIMES /WEEK	COMPOS
	SAMPLE MEASUREMENT										
	PERMIT REQUIREMENT										
	SAMPLE MEASUREMENT										
	PERMIT REQUIREMENT										
	SAMPLE MEASUREMENT										
	PERMIT REQUIREMENT										
	SAMPLE MEASUREMENT										
	PERMIT REQUIREMENT										
	SAMPLE MEASUREMENT										
	PERMIT REQUIREMENT										

NAME/TITLE PRINCIPAL EXECUTIVE OFFICER

JUN CHANG
DEPUTY DIRECTOR

TYPED OR PRINTED

I certify under penalty of law that this document and all attachments were prepared under my direction or supervision in accordance with a system designed to assure that qualified personnel properly gather and evaluate the information submitted. Based on my inquiry of the person or persons who manage the system, or those persons directly responsible for gathering the information, the information submitted is, to the best of my knowledge and belief, true, accurate and complete. I am aware that there are significant penalties for submitting false information, including the possibility of fine and imprisonment for knowing violations. See 18 U.S.C. § 1001 and 33 USC § 1319. (Penalties under these statutes may include fines up to $10,000 and or minimum imprisonment of between 6 months and 5 years.)

SIGNATURE OF PRINCIPAL EXECUTIVE OFFICER OR AUTHORIZED AGENT

TELEPHONE AREA	TELEPHONE NUMBER	DATE YEAR	DATE MO	DATE DAY
281	575-2824	09	10	07

COMMENT AND EXPLANATIONS OF ANY VIOLATIONS (Reference all attachments here)

PERMITTEE NAME/ADDRESS (Include Facility Name/Location if different)

NATIONAL POLLUTANT DISCHARGE ELIMINATION SYSTEM (NPDES)
DISCHARGE MONITORING REPORT (DMR)

NAME: CITY OF HOUSTON
ADDRESS: KINGWOOD CENTRAL PLANT
4545 GROVEWAY
HOUSTON TX 77087-1122
FACILITY:
LOCATION:

PERMIT NUMBER: TX0066583
DISCHARGE NUMBER: 001 B

MAJOR
M - INTERIM II
TOTAL FACILITY DISCHARGE

☐ Check here if No Discharge

MONITORING PERIOD	YEAR	MO	DAY		YEAR	MO	DAY
FROM	07	10	01	TO	07	10	31

NOTE: Read instructions before completing this form.

PARAMETER		QUANTITY OR LOADING AVERAGE	QUANTITY OR LOADING MAXIMUM	QUANTITY OR LOADING UNITS	QUALITY OR CONCENTRATION MINIMUM	QUALITY OR CONCENTRATION AVERAGE	QUALITY OR CONCENTRATION MAXIMUM	QUALITY OR CONCENTRATION UNITS	NO. EX	FREQUENCY OF ANALYSIS	SAMPLE TYPE
OXYGEN, DISSOLVED (DO) 00300 1 0 0 EFFLUENT GROSS VALUE	SAMPLE MEASUREMENT	******	******		6.7	******	******		0	5TIMES /WEEK	GRAB
	PERMIT REQUIREMENT	******	******	**** ****	6.0 MO MIN	******	******	(19) MG/L		5TIMES /WEEK	GRAB
PH 00400 1 0 0 EFFLUENT GROSS VALUE	SAMPLE MEASUREMENT	******	******		7.1	******	7.4		0	5TIMES /WEEK	GRAB
	PERMIT REQUIREMENT	******	******	**** ****	6.0 MINIMUM	******	9.0 MAXIMUM	(12) SU		5TIMES /WEEK	GRAB
SOLIDS, TOTAL SUSPENDED 00530 1 0 0 EFFLUENT GROSS VALUE	SAMPLE MEASUREMENT	75	******		******	2	4		0	5TIMES /WEEK	COMPOS
	PERMIT REQUIREMENT	584 DAILY AV	******	(26) LBS/DY	******	10 DAILY AV	40 DAILY MX	(19) MG/L		5TIMES /WEEK	COMPOS
NITROGEN, AMMONIA TOTAL (AS N) 00610 1 0 0 EFFLUENT GROSS VALUE	SAMPLE MEASUREMENT	8.4	******		******	0.2	0.5		0	5TIMES /WEEK	COMPOS
	PERMIT REQUIREMENT	175 DAILY AV	******	(26) LBS/DY	******	3 DAILY AV	7 DAILY MX	(19) MG/L		5TIMES /WEEK	COMPOS
FLOW, IN CONDUIT OR THRU TREATMENT PLANT 50050 P 0 0 SEE COMMENTS BELOW	SAMPLE MEASUREMENT	******	12361		******	******	******		0	CONTIN UOUS	TOTALZ
	PERMIT REQUIREMENT	******	25678 2HR PEAK	(78) GPM	******	******	******	**** ****		CONTIN UOUS	TOTALZ
FLOW, IN CONDUIT OR THRU TREATMENT PLANT 50050 Y 0 0 ANNUAL AVERAGE	SAMPLE MEASUREMENT	4.856	******		******	******	******		0	CONTIN UOUS	TOTALZ
	PERMIT REQUIREMENT	7.0 ANNL AVG	******	(03) MGD	******	******	******	**** ****		CONTIN UOUS	TOTALZ
FLOW, IN CONDUIT OR THRU TREATMENT PLANT 50050 1 0 0 EFFLUENT GROSS VALUE	SAMPLE MEASUREMENT	4.857	8.016		******	******	******		0	CONTIN UOUS	TOTALZ
	PERMIT REQUIREMENT	REPORT DAILY AV	REPORT DAILY MX	(03) MGD	******	******	******	**** ****		CONTIN UOUS	TOTALZ

NAME/TITLE PRINCIPAL EXECUTIVE OFFICER
JUN CHANG
DEPUTY DIRECTOR
TYPED OR PRINTED

I certify under penalty of law that this document and all attachments were prepared under my direction or supervision in accordance with a system designed to assure that qualified personnel properly gather and evaluate the information submitted. Based on my inquiry of the person or persons who manage the system, or those persons directly responsible for gathering the information, the information submitted is, to the best of my knowledge and belief, true, accurate and complete. I am aware that there are significant penalties for submitting false information, including the possibility of fine and imprisonment for knowing violations. See 18 U.S.C. § 1001 and 33 USC § 1319. (Penalties under these statutes may include fines up to $10,000 and/or maximum imprisonment of between 6 months and 5 years.)

SIGNATURE OF PRINCIPAL EXECUTIVE OFFICER OR AUTHORIZED AGENT

TELEPHONE AREA	TELEPHONE NUMBER	DATE YEAR	DATE MO	DATE DAY
281	575-2824	09	10	07

COMMENT AND EXPLANATIONS OF ANY VIOLATIONS (Reference all attachments here)

PERMITTEE NAME/ADDRESS (Include Facility Name/Location if different)

NATIONAL POLLUTANT DISCHARGE ELIMINATION SYSTEM (NPDES)
DISCHARGE MONITORING REPORT (DMR)

NAME: CITY OF HOUSTON
ADDRESS: KINGWOOD CENTRAL PLANT
4545 GROVEWAY
HOUSTON TX 77087-1122
FACILITY:
LOCATION:

PERMIT NUMBER: TX0066583
DISCHARGE NUMBER: 001 B

MAJOR
M - INTERIM II
TOTAL FACILITY DISCHARGE

☐ Check here if No Discharge

MONITORING PERIOD	YEAR	MO	DAY		YEAR	MO	DAY
FROM	07	10	01	TO	07	10	31

NOTE: Read instructions before completing this form.

PARAMETER		QUANTITY OR LOADING			QUALITY OR CONCENTRATION				NO. EX	FREQUENCY OF ANALYSIS	SAMPLE TYPE
		AVERAGE	MAXIMUM	UNITS	MINIMUM	AVERAGE	MAXIMUM	UNITS			
COLIFORM, FECAL GENERAL 74055 1 0 0 EFFLUENT GROSS VALUE	SAMPLE MEASUREMENT	******	******		******	15	21		0	DAILY	GRAB
	PERMIT REQUIREMENT	******	******	**** ****	******	200 DA GEOAV	400 7 DA GEO	(13) #/100ML		DAILY	GRAB
BOD, CARBONACEOUS 05 DAY, 20C 80082 1 0 0 EFFLUENT GROSS VALUE	SAMPLE MEASUREMENT	133	******		******	3	11		0	5TIMES /WEEK	COMPOS
	PERMIT REQUIREMENT	292 DAILY AV	******	(26) LBS/DY	******	5 DAILY AV	20 DAILY MX	(19) MG/L		5TIMES /WEEK	COMPOS
	SAMPLE MEASUREMENT										
	PERMIT REQUIREMENT										
	SAMPLE MEASUREMENT										
	PERMIT REQUIREMENT										
	SAMPLE MEASUREMENT										
	PERMIT REQUIREMENT										
	SAMPLE MEASUREMENT										
	PERMIT REQUIREMENT										
	SAMPLE MEASUREMENT										
	PERMIT REQUIREMENT										

NAME/TITLE PRINCIPAL EXECUTIVE OFFICER

JUN CHANG
DEPUTY DIRECTOR

TYPED OR PRINTED

I certify under penalty of law that this document and all attachments were prepared under my direction or supervision in accordance with a system designed to assure that qualified personnel properly gather and evaluate the information submitted. Based on my inquiry of the person or persons who manage the system, or those persons directly responsible for gathering the information, the information submitted is, to the best of my knowledge and belief, true, accurate and complete. I am aware that there are significant penalties for submitting false information, including the possibility of fine and imprisonment for knowing violations. See 18 U.S.C. § 1001 and 33 USC § 1319. (Penalties under these statutes may include fines up to $10,000 and/or maximum imprisonment of between 6 months and 5 years.)

SIGNATURE OF PRINCIPAL EXECUTIVE OFFICER OR AUTHORIZED AGENT

TELEPHONE		DATE		
AREA	NUMBER	YEAR	MO	DAY
281	575-2824	09	10	07

COMMENT AND EXPLANATIONS OF ANY VIOLATIONS (Reference all attachments here)

PERMITTEE NAME/ADDRESS (Include Facility Name/Location if different)

NATIONAL POLLUTANT DISCHARGE ELIMINATION SYSTEM (NPDES)
DISCHARGE MONITORING REPORT (DMR)

NAME: CITY OF HOUSTON
ADDRESS: KINGWOOD CENTRAL PLANT
4545 GROVEWAY
HOUSTON TX 77087-1122
FACILITY
LOCATION

PERMIT NUMBER: TX0066583
DISCHARGE NUMBER: 001 B

MAJOR
M - INTERIM II
TOTAL FACILITY DISCHARGE

☐ Check here if No Discharge

MONITORING PERIOD	YEAR	MO	DAY		YEAR	MO	DAY
FROM	07	11	01	TO	07	11	30

NOTE: Read instructions before completing this form.

PARAMETER		QUANTITY OR LOADING AVERAGE	QUANTITY OR LOADING MAXIMUM	QUANTITY OR LOADING UNITS	QUALITY OR CONCENTRATION MINIMUM	QUALITY OR CONCENTRATION AVERAGE	QUALITY OR CONCENTRATION MAXIMUM	QUALITY OR CONCENTRATION UNITS	NO. EX	FREQUENCY OF ANALYSIS	SAMPLE TYPE
OXYGEN, DISSOLVED (DO) 00300 1 0 0 EFFLUENT GROSS VALUE	SAMPLE MEASUREMENT	******	******		6.8	******	******		0	5TIMES /WEEK	GRAB
	PERMIT REQUIREMENT	******	******	**** ****	6.0 MO MIN	******	******	(19) MG/L		5TIMES /WEEK	GRAB
PH 00400 1 0 0 EFFLUENT GROSS VALUE	SAMPLE MEASUREMENT	******	******		6.9	******	7.6		0	5TIMES /WEEK	GRAB
	PERMIT REQUIREMENT	******	******	**** ****	6.0 MINIMUM	******	9.0 MAXIMUM	(12) SU		5TIMES /WEEK	GRAB
SOLIDS, TOTAL SUSPENDED 00530 1 0 0 EFFLUENT GROSS VALUE	SAMPLE MEASUREMENT	132	******		******	3	17		0	5TIMES /WEEK	COMPOS
	PERMIT REQUIREMENT	584 DAILY AV	******	(26) LBS/DY	******	10 DAILY AV	40 DAILY MX	(19) MG/L		5TIMES /WEEK	COMPOS
NITROGEN, AMMONIA TOTAL (AS N) 00610 1 0 0 EFFLUENT GROSS VALUE	SAMPLE MEASUREMENT	9.1	******		******	0.2	1.0		0	5TIMES /WEEK	COMPOS
	PERMIT REQUIREMENT	175 DAILY AV	******	(26) LBS/DY	******	3 DAILY AV	7 DAILY MX	(19) MG/L		5TIMES /WEEK	COMPOS
FLOW, IN CONDUIT OR THRU TREATMENT PLANT 50050 P 0 0 SEE COMMENTS BELOW	SAMPLE MEASUREMENT	******	7113		******	******	******		0	CONTIN UOUS	TOTALZ
	PERMIT REQUIREMENT	******	25678 2HR PEAK	(78) GPM	******	******	******	**** ****		CONTIN UOUS	TOTALZ
FLOW, IN CONDUIT OR THRU TREATMENT PLANT 50050 Y 0 0 ANNUAL AVERAGE	SAMPLE MEASUREMENT	4.861	******		******	******	******		0	CONTIN UOUS	TOTALZ
	PERMIT REQUIREMENT	7.0 ANNL AVG	******	(03) MGD	******	******	******	**** ****		CONTIN UOUS	TOTALZ
FLOW, IN CONDUIT OR THRU TREATMENT PLANT 50050 1 0 0 EFFLUENT GROSS VALUE	SAMPLE MEASUREMENT	4.793	6.428		******	******	******		0	CONTIN UOUS	TOTALZ
	PERMIT REQUIREMENT	REPORT DAILY AV	REPORT DAILY MX	(03) MGD	******	******	******	**** ****		CONTIN UOUS	TOTALZ

NAME/TITLE PRINCIPAL EXECUTIVE OFFICER

JUN CHANG
DEPUTY DIRECTOR

TYPED OR PRINTED

I certify under penalty of law that this document and all attachments were prepared under my direction or supervision in accordance with a system designed to assure that qualified personnel properly gather and evaluate the information submitted. Based on my inquiry of the person or persons who manage the system, or those persons directly responsible for gathering the information, the information submitted is, to the best of my knowledge and belief, true, accurate and complete. I am aware that there are significant penalties for submitting false information, including the possibility of fine and imprisonment for knowing violations. See 18 U.S.C. § 1001 and 33 USC § 1319. (Penalties under these statutes may include fines up to $10,000 and/or maximum imprisonment of between 6 months and 5 years.)

SIGNATURE OF PRINCIPAL EXECUTIVE OFFICER OR AUTHORIZED AGENT

TELEPHONE AREA	TELEPHONE NUMBER	DATE YEAR	DATE MO	DATE DAY
281	575-2824	09	10	07

COMMENT AND EXPLANATIONS OF ANY VIOLATIONS (Reference all attachments here)

PERMITTEE NAME/ADDRESS (Include Facility Name/Location if different)

NATIONAL POLLUTANT DISCHARGE ELIMINATION SYSTEM (NPDES)
DISCHARGE MONITORING REPORT (DMR)

NAME: CITY OF HOUSTON
ADDRESS: KINGWOOD CENTRAL PLANT
4545 GROVEWAY
HOUSTON TX 77087-1122
FACILITY:
LOCATION:

PERMIT NUMBER: TX0066583

DISCHARGE NUMBER: 001 B

MAJOR

M - INTERIM II
TOTAL FACILITY DISCHARGE

☐ Check here if No Discharge

MONITORING PERIOD	YEAR	MO	DAY		YEAR	MO	DAY
FROM	07	11	01	TO	07	11	30

NOTE: Read instructions before completing this form.

PARAMETER		QUANTITY OR LOADING			QUALITY OR CONCENTRATION				NO. EX	FREQUENCY OF ANALYSIS	SAMPLE TYPE
		AVERAGE	MAXIMUM	UNITS	MINIMUM	AVERAGE	MAXIMUM	UNITS			
COLIFORM, FECAL GENERAL 74055 1 0 0 EFFLUENT GROSS VALUE	SAMPLE MEASUREMENT	******	******		******	15	18		0	DAILY	GRAB
	PERMIT REQUIREMENT	******	******	**** ****	******	200 DA GEOAV	400 7 DA GEO	(13) #/100ML		DAILY	GRAB
BOD, CARBONACEOUS 05 DAY, 20C 80082 1 0 0 EFFLUENT GROSS VALUE	SAMPLE MEASUREMENT	88	******		******	2	9		0	5TIMES /WEEK	COMPOS
	PERMIT REQUIREMENT	292 DAILY AV	******	(26) LBS/DY	******	5 DAILY AV	20 DAILY MX	(19) MG/L		5TIMES /WEEK	COMPOS
	SAMPLE MEASUREMENT										
	PERMIT REQUIREMENT										
	SAMPLE MEASUREMENT										
	PERMIT REQUIREMENT										
	SAMPLE MEASUREMENT										
	PERMIT REQUIREMENT										
	SAMPLE MEASUREMENT										
	PERMIT REQUIREMENT										
	SAMPLE MEASUREMENT										
	PERMIT REQUIREMENT										

NAME/TITLE PRINCIPAL EXECUTIVE OFFICER

JUN CHANG
DEPUTY DIRECTOR

TYPED OR PRINTED

I certify under penalty of law that this document and all attachments were prepared under my direction or supervision in accordance with a system designed to assure that qualified personnel properly gather and evaluate the information submitted. Based on my inquiry of the person or persons who manage the system, or those persons directly responsible for gathering the information, the information submitted is, to the best of my knowledge and belief, true, accurate and complete. I am aware that there are significant penalties for submitting false information, including the possibility of fine and imprisonment for knowing violations. See 18 U.S.C. § 1001 and 33 USC § 1319. (Penalties under these statutes may include fines up to $10,000 and or maximum imprisonment of between 6 months and 5 years.)

SIGNATURE OF PRINCIPAL EXECUTIVE OFFICER OR AUTHORIZED AGENT

TELEPHONE		DATE		
281	575-2824	09	10	07
AREA	NUMBER	YEAR	MO	DAY

COMMENT AND EXPLANATIONS OF ANY VIOLATIONS (Reference all attachments here)

PERMITTEE NAME/ADDRESS (Include Facility Name/Location if different)

NATIONAL POLLUTANT DISCHARGE ELIMINATION SYSTEM (NPDES)
DISCHARGE MONITORING REPORT (DMR)

NAME: CITY OF HOUSTON
ADDRESS: KINGWOOD CENTRAL PLANT
4545 GROVEWAY
HOUSTON TX 77087-1122
FACILITY:
LOCATION:

PERMIT NUMBER: TX0066583
DISCHARGE NUMBER: 001 B

MAJOR
M - INTERIM II
TOTAL FACILITY DISCHARGE

☐ Check here if No Discharge

MONITORING PERIOD	YEAR	MO	DAY		YEAR	MO	DAY
FROM	07	12	01	TO	07	12	31

NOTE: Read instructions before completing this form.

PARAMETER		QUANTITY OR LOADING AVERAGE	QUANTITY OR LOADING MAXIMUM	QUANTITY OR LOADING UNITS	QUALITY OR CONCENTRATION MINIMUM	QUALITY OR CONCENTRATION AVERAGE	QUALITY OR CONCENTRATION MAXIMUM	QUALITY OR CONCENTRATION UNITS	NO. EX	FREQUENCY OF ANALYSIS	SAMPLE TYPE
OXYGEN, DISSOLVED (DO) 00300 1 0 0 EFFLUENT GROSS VALUE	SAMPLE MEASUREMENT	******	******		6.6	******	******		0	5TIMES /WEEK	GRAB
	PERMIT REQUIREMENT	******	******	**** ****	6.0 MO MIN	******	******	(19) MG/L		5TIMES /WEEK	GRAB
PH 00400 1 0 0 EFFLUENT GROSS VALUE	SAMPLE MEASUREMENT	******	******		6.8	******	7.5		0	5TIMES /WEEK	GRAB
	PERMIT REQUIREMENT	******	******	**** ****	6.0 MINIMUM	******	9.0 MAXIMUM	(12) SU		5TIMES /WEEK	GRAB
SOLIDS, TOTAL SUSPENDED 00530 1 0 0 EFFLUENT GROSS VALUE	SAMPLE MEASUREMENT	77	******		******	2	8		0	5TIMES /WEEK	COMPOS
	PERMIT REQUIREMENT	584 DAILY AV	******	(26) LBS/DY	******	10 DAILY AV	40 DAILY MX	(19) MG/L		5TIMES /WEEK	COMPOS
NITROGEN, AMMONIA TOTAL (AS N) 00610 1 0 0 EFFLUENT GROSS VALUE	SAMPLE MEASUREMENT	35.1	******		******	0.9	2.3		0	5TIMES /WEEK	COMPOS
	PERMIT REQUIREMENT	175 DAILY AV	******	(26) LBS/DY	******	3 DAILY AV	7 DAILY MX	(19) MG/L		5TIMES /WEEK	COMPOS
FLOW, IN CONDUIT OR THRU TREATMENT PLANT 50050 P 0 0 SEE COMMENTS BELOW	SAMPLE MEASUREMENT	******	9175		******	******	******		0	CONTIN UOUS	TOTALZ
	PERMIT REQUIREMENT	******	25678 2HR PEAK	(78) GPM	******	******	******	**** ****		CONTIN UOUS	TOTALZ
FLOW, IN CONDUIT OR THRU TREATMENT PLANT 50050 Y 0 0 ANNUAL AVERAGE	SAMPLE MEASUREMENT	4.878	******		******	******	******		0	CONTIN UOUS	TOTALZ
	PERMIT REQUIREMENT	7.0 ANNL AVG	******	(03) MGD	******	******	******	**** ****		CONTIN UOUS	TOTALZ
FLOW, IN CONDUIT OR THRU TREATMENT PLANT 50050 1 0 0 EFFLUENT GROSS VALUE	SAMPLE MEASUREMENT	4.823	5.304		******	******	******		0	CONTIN UOUS	TOTALZ
	PERMIT REQUIREMENT	REPORT DAILY AV	REPORT DAILY MX	(03) MGD	******	******	******	**** ****		CONTIN UOUS	TOTALZ

NAME/TITLE PRINCIPAL EXECUTIVE OFFICER

JUN CHANG
DEPUTY DIRECTOR

TYPED OR PRINTED

I certify under penalty of law that this document and all attachments were prepared under my direction or supervision in accordance with a system designed to assure that qualified personnel properly gather and evaluate the information submitted. Based on my inquiry of the person or persons who manage the system, or those persons directly responsible for gathering the information, the information submitted is, to the best of my knowledge and belief, true, accurate and complete. I am aware that there are significant penalties for submitting false information, including the possibility of fine and imprisonment for knowing violations. See 18 U.S.C. § 1001 and 33 USC § 1319. (Penalties under these statutes may include fines up to $10,000 and/or maximum imprisonment of between 6 months and 5 years.)

SIGNATURE OF PRINCIPAL EXECUTIVE OFFICER OR AUTHORIZED AGENT

TELEPHONE AREA	TELEPHONE NUMBER	DATE YEAR	DATE MO	DATE DAY
281	575-2824	09	10	07

COMMENT AND EXPLANATIONS OF ANY VIOLATIONS (Reference all attachments here)

PERMITTEE NAME/ADDRESS (Include Facility Name/Location if different)

NATIONAL POLLUTANT DISCHARGE ELIMINATION SYSTEM (NPDES)
DISCHARGE MONITORING REPORT (DMR)

NAME: CITY OF HOUSTON
ADDRESS: KINGWOOD CENTRAL PLANT
4545 GROVEWAY
HOUSTON TX 77087-1122
FACILITY
LOCATION

PERMIT NUMBER: TX0066583
DISCHARGE NUMBER: 001 B

MAJOR
M - INTERIM II
TOTAL FACILITY DISCHARGE

☐ Check here if No Discharge

MONITORING PERIOD	YEAR	MO	DAY		YEAR	MO	DAY
FROM	07	12	01	TO	07	12	31

NOTE: Read instructions before completing this form.

PARAMETER		QUANTITY OR LOADING AVERAGE	QUANTITY OR LOADING MAXIMUM	QUANTITY OR LOADING UNITS	QUALITY OR CONCENTRATION MINIMUM	QUALITY OR CONCENTRATION AVERAGE	QUALITY OR CONCENTRATION MAXIMUM	QUALITY OR CONCENTRATION UNITS	NO. EX	FREQUENCY OF ANALYSIS	SAMPLE TYPE
COLIFORM, FECAL GENERAL	SAMPLE MEASUREMENT	******	******		******	15	17		0	DAILY	GRAB
74055 1 0 0 EFFLUENT GROSS VALUE	PERMIT REQUIREMENT	******	******	**** ****	******	200 DA GEOAV	400 7 DA GEO	(13) #/100ML		DAILY	GRAB
BOD, CARBONACEOUS 05 DAY, 20C	SAMPLE MEASUREMENT	141	******		******	4	20		0	5TIMES /WEEK	COMPOS
80082 1 0 0 EFFLUENT GROSS VALUE	PERMIT REQUIREMENT	292 DAILY AV	******	(26) LBS/DY	******	5 DAILY AV	20 DAILY MX	(19) MG/L		5TIMES /WEEK	COMPOS
	SAMPLE MEASUREMENT										
	PERMIT REQUIREMENT										
	SAMPLE MEASUREMENT										
	PERMIT REQUIREMENT										
	SAMPLE MEASUREMENT										
	PERMIT REQUIREMENT										
	SAMPLE MEASUREMENT										
	PERMIT REQUIREMENT										
	SAMPLE MEASUREMENT										
	PERMIT REQUIREMENT										

NAME/TITLE PRINCIPAL EXECUTIVE OFFICER

JUN CHANG
DEPUTY DIRECTOR

TYPED OR PRINTED

I certify under penalty of law that this document and all attachments were prepared under my direction or supervision in accordance with a system designed to assure that qualified personnel properly gather and evaluate the information submitted. Based on my inquiry of the person or persons who manage the system, or those persons directly responsible for gathering the information, the information submitted is, to the best of my knowledge and belief, true, accurate and complete. I am aware that there are significant penalties for submitting false information, including the possibility of fine and imprisonment for knowing violations. See 18 U.S.C. § 1001 and 33 USC § 1319. (Penalties under these statutes may include fines up to $10,000 and/or maximum imprisonment of between 6 months and 5 years.)

SIGNATURE OF PRINCIPAL EXECUTIVE OFFICER OR AUTHORIZED AGENT

TELEPHONE AREA	TELEPHONE NUMBER	DATE YEAR	DATE MO	DATE DAY
281	575-2824	09	10	07

COMMENT AND EXPLANATIONS OF ANY VIOLATIONS (Reference all attachments here)

PERMITTEE NAME/ADDRESS (Include Facility Name/Location if different)

NATIONAL POLLUTANT DISCHARGE ELIMINATION SYSTEM (NPDES)
DISCHARGE MONITORING REPORT (DMR)

NAME: CITY OF HOUSTON
ADDRESS: KINGWOOD CENTRAL PLANT
4545 GROVEWAY
HOUSTON TX 77087-1122
FACILITY
LOCATION

TX0066583 — PERMIT NUMBER
001 B — DISCHARGE NUMBER

MAJOR

M - INTERIM II
TOTAL FACILITY DISCHARGE

☐ Check here if No Discharge

MONITORING PERIOD	YEAR	MO	DAY		YEAR	MO	DAY
FROM	08	01	01	TO	08	01	31

NOTE: Read instructions before completing this form.

PARAMETER		QUANTITY OR LOADING AVERAGE	QUANTITY OR LOADING MAXIMUM	QUANTITY OR LOADING UNITS	QUALITY OR CONCENTRATION MINIMUM	QUALITY OR CONCENTRATION AVERAGE	QUALITY OR CONCENTRATION MAXIMUM	QUALITY OR CONCENTRATION UNITS	NO. EX	FREQUENCY OF ANALYSIS	SAMPLE TYPE
OXYGEN, DISSOLVED (DO) 00300 1 0 0 EFFLUENT GROSS VALUE	SAMPLE MEASUREMENT	******	******		7.0	******	******		0	5TIMES /WEEK	GRAB
	PERMIT REQUIREMENT	******	******	**** ****	6.0 MO MIN	******	******	(19) MG/L		5TIMES /WEEK	GRAB
PH 00400 1 0 0 EFFLUENT GROSS VALUE	SAMPLE MEASUREMENT	******	******		6.7	******	7.5		0	5TIMES /WEEK	GRAB
	PERMIT REQUIREMENT	******	******	**** ****	6.0 MINIMUM	******	9.0 MAXIMUM	(12) SU		5TIMES /WEEK	GRAB
SOLIDS, TOTAL SUSPENDED 00530 1 0 0 EFFLUENT GROSS VALUE	SAMPLE MEASUREMENT	63	******		******	2	3		0	5TIMES /WEEK	COMPOS
	PERMIT REQUIREMENT	584 DAILY AV	******	(26) LBS/DY	******	10 DAILY AV	40 DAILY MX	(19) MG/L		5TIMES /WEEK	COMPOS
NITROGEN, AMMONIA TOTAL (AS N) 00610 1 0 0 EFFLUENT GROSS VALUE	SAMPLE MEASUREMENT	15.6	******		******	0.4	1.3		0	5TIMES /WEEK	COMPOS
	PERMIT REQUIREMENT	175 DAILY AV	******	(26) LBS/DY	******	3 DAILY AV	7 DAILY MX	(19) MG/L		5TIMES /WEEK	COMPOS
FLOW, IN CONDUIT OR THRU TREATMENT PLANT 50050 P 0 0 SEE COMMENTS BELOW	SAMPLE MEASUREMENT	******	8971		******	******	******		0	CONTIN UOUS	TOTALZ
	PERMIT REQUIREMENT	******	25678 2HR PEAK	(78) GPM	******	******	******	**** ****		CONTIN UOUS	TOTALZ
FLOW, IN CONDUIT OR THRU TREATMENT PLANT 50050 Y 0 0 ANNUAL AVERAGE	SAMPLE MEASUREMENT	4.882	******		******	******	******		0	CONTIN UOUS	TOTALZ
	PERMIT REQUIREMENT	7.0 ANNL AVG	******	(03) MGD	******	******	******	**** ****		CONTIN UOUS	TOTALZ
FLOW, IN CONDUIT OR THRU TREATMENT PLANT 50050 1 0 0 EFFLUENT GROSS VALUE	SAMPLE MEASUREMENT	5.088	6.553		******	******	******		0	CONTIN UOUS	TOTALZ
	PERMIT REQUIREMENT	REPORT DAILY AV	REPORT DAILY MX	(03) MGD	******	******	******	**** ****		CONTIN UOUS	TOTALZ

NAME/TITLE PRINCIPAL EXECUTIVE OFFICER

JUN CHANG
DEPUTY DIRECTOR

TYPED OR PRINTED

I certify under penalty of law that this document and all attachments were prepared under my direction or supervision in accordance with a system designed to assure that qualified personnel properly gather and evaluate the information submitted. Based on my inquiry of the person or persons who manage the system, or those persons directly responsible for gathering the information, the information submitted is, to the best of my knowledge and belief, true, accurate and complete. I am aware that there are significant penalties for submitting false information, including the possibility of fine and imprisonment for knowing violations. See 18 U.S.C. § 1001 and 33 USC § 1319. (Penalties under these statutes may include fines up to $10,000 and/or maximum imprisonment of between 6 months and 5 years.)

SIGNATURE OF PRINCIPAL EXECUTIVE OFFICER OR AUTHORIZED AGENT

TELEPHONE AREA	TELEPHONE NUMBER	DATE YEAR	DATE MO	DATE DAY
281	575-2824	09	10	07

COMMENT AND EXPLANATIONS OF ANY VIOLATIONS (Reference all attachments here)

PERMITTEE NAME/ADDRESS (Include Facility Name/Location if different)

NATIONAL POLLUTANT DISCHARGE ELIMINATION SYSTEM (NPDES)
DISCHARGE MONITORING REPORT (DMR)

NAME: CITY OF HOUSTON
ADDRESS: KINGWOOD CENTRAL PLANT
4545 GROVEWAY
HOUSTON TX 77087-1122
FACILITY
LOCATION

PERMIT NUMBER: TX0066583
DISCHARGE NUMBER: 001 B

MAJOR
M - INTERIM II
TOTAL FACILITY DISCHARGE

☐ Check here if No Discharge

MONITORING PERIOD	YEAR	MO	DAY		YEAR	MO	DAY
FROM	08	01	01	TO	08	01	31

NOTE: Read instructions before completing this form.

PARAMETER		QUANTITY OR LOADING AVERAGE	QUANTITY OR LOADING MAXIMUM	QUANTITY OR LOADING UNITS	QUALITY OR CONCENTRATION MINIMUM	QUALITY OR CONCENTRATION AVERAGE	QUALITY OR CONCENTRATION MAXIMUM	QUALITY OR CONCENTRATION UNITS	NO. EX	FREQUENCY OF ANALYSIS	SAMPLE TYPE
COLIFORM, FECAL GENERAL 74055 1 0 0 EFFLUENT GROSS VALUE	SAMPLE MEASUREMENT	******	******		******	16	19		0	DAILY	GRAB
	PERMIT REQUIREMENT	******	******	**** ****	******	200 DA GEOAV	400 7 DA GEO	(13) #/100ML		DAILY	GRAB
BOD, CARBONACEOUS 05 DAY, 20C 80082 1 0 0 EFFLUENT GROSS VALUE	SAMPLE MEASUREMENT	87	******		******	2	8		0	5TIMES /WEEK	COMPOS
	PERMIT REQUIREMENT	292 DAILY AV	******	(26) LBS/DY	******	5 DAILY AV	20 DAILY MX	(19) MG/L		5TIMES /WEEK	COMPOS
	SAMPLE MEASUREMENT										
	PERMIT REQUIREMENT										
	SAMPLE MEASUREMENT										
	PERMIT REQUIREMENT										
	SAMPLE MEASUREMENT										
	PERMIT REQUIREMENT										
	SAMPLE MEASUREMENT										
	PERMIT REQUIREMENT										
	SAMPLE MEASUREMENT										
	PERMIT REQUIREMENT										

NAME/TITLE PRINCIPAL EXECUTIVE OFFICER

JUN CHANG
DEPUTY DIRECTOR

TYPED OR PRINTED

I certify under penalty of law that this document and all attachments were prepared under my direction or supervision in accordance with a system designed to assure that qualified personnel properly gather and evaluate the information submitted. Based on my inquiry of the person or persons who manage the system, or those persons directly responsible for gathering the information, the information submitted is, to the best of my knowledge and belief, true, accurate and complete. I am aware that there are significant penalties for submitting false information, including the possibility of fine and imprisonment for knowing violations. See 18 U.S.C. § 1001 and 33 USC § 1319. (Penalties under these statutes may include fines up to $10,000 and/or maximum imprisonment of between 6 months and 5 years.)

SIGNATURE OF PRINCIPAL EXECUTIVE OFFICER OR AUTHORIZED AGENT

TELEPHONE AREA	TELEPHONE NUMBER	DATE YEAR	DATE MO	DATE DAY
281	575-2824	09	10	07

COMMENT AND EXPLANATIONS OF ANY VIOLATIONS (Reference all attachments here)

NATIONAL POLLUTANT DISCHARGE ELIMINATION SYSTEM (NPDES)
DISCHARGE MONITORING REPORT (DMR)

NAME: CITY OF HOUSTON
ADDRESS: KINGWOOD CENTRAL PLANT
4545 GROVEWAY
HOUSTON TX 77087-1122
FACILITY
LOCATION

PERMIT NUMBER: TX0066583
DISCHARGE NUMBER: 001 B

MAJOR
M - INTERIM II
TOTAL FACILITY DISCHARGE

☐ Check here if No Discharge

MONITORING PERIOD	YEAR	MO	DAY		YEAR	MO	DAY
FROM	08	02	01	TO	08	02	29

NOTE: Read instructions before completing this form.

PARAMETER		QUANTITY OR LOADING AVERAGE	QUANTITY OR LOADING MAXIMUM	QUANTITY OR LOADING UNITS	QUALITY OR CONCENTRATION MINIMUM	QUALITY OR CONCENTRATION AVERAGE	QUALITY OR CONCENTRATION MAXIMUM	QUALITY OR CONCENTRATION UNITS	NO. EX	FREQUENCY OF ANALYSIS	SAMPLE TYPE
OXYGEN, DISSOLVED (DO) 00300 1 0 0 EFFLUENT GROSS VALUE	SAMPLE MEASUREMENT	******	******		7.4	******	******		0	5TIMES /WEEK	GRAB
	PERMIT REQUIREMENT	******	******	**** ****	6.0 MO MIN	******	******	(19) MG/L		5TIMES /WEEK	GRAB
PH 00400 1 0 0 EFFLUENT GROSS VALUE	SAMPLE MEASUREMENT	******	******		6.8	******	7.4		0	5TIMES /WEEK	GRAB
	PERMIT REQUIREMENT	******	******	**** ****	6.0 MINIMUM	******	9.0 MAXIMUM	(12) SU		5TIMES /WEEK	GRAB
SOLIDS, TOTAL SUSPENDED 00530 1 0 0 EFFLUENT GROSS VALUE	SAMPLE MEASUREMENT	83	******		******	2	5		0	5TIMES /WEEK	COMPOS
	PERMIT REQUIREMENT	584 DAILY AV	******	(26) LBS/DY	******	10 DAILY AV	40 DAILY MX	(19) MG/L		5TIMES /WEEK	COMPOS
NITROGEN, AMMONIA TOTAL (AS N) 00610 1 0 0 EFFLUENT GROSS VALUE	SAMPLE MEASUREMENT	6.6	******		******	0.2	0.9		0	5TIMES /WEEK	COMPOS
	PERMIT REQUIREMENT	175 DAILY AV	******	(26) LBS/DY	******	3 DAILY AV	7 DAILY MX	(19) MG/L		5TIMES /WEEK	COMPOS
FLOW, IN CONDUIT OR THRU TREATMENT PLANT 50050 P 0 0 SEE COMMENTS BELOW	SAMPLE MEASUREMENT	******	12242		******	******	******		0	CONTIN UOUS	TOTALZ
	PERMIT REQUIREMENT	******	25678 2HR PEAK	(78) GPM	******	******	******	**** ****		CONTIN UOUS	TOTALZ
FLOW, IN CONDUIT OR THRU TREATMENT PLANT 50050 Y 0 0 ANNUAL AVERAGE	SAMPLE MEASUREMENT	4.916	******		******	******	******		0	CONTIN UOUS	TOTALZ
	PERMIT REQUIREMENT	7.0 ANNL AVG	******	(03) MGD	******	******	******	**** ****		CONTIN UOUS	TOTALZ
FLOW, IN CONDUIT OR THRU TREATMENT PLANT 50050 1 0 0 EFFLUENT GROSS VALUE	SAMPLE MEASUREMENT	5.082	7.491		******	******	******		0	CONTIN UOUS	TOTALZ
	PERMIT REQUIREMENT	REPORT DAILY AV	REPORT DAILY MX	(03) MGD	******	******	******	**** ****		CONTIN UOUS	TOTALZ

NAME/TITLE PRINCIPAL EXECUTIVE OFFICER

JUN CHANG
DEPUTY DIRECTOR

TYPED OR PRINTED

I certify under penalty of law that this document and all attachments were prepared under my direction or supervision in accordance with a system designed to assure that qualified personnel properly gather and evaluate the information submitted. Based on my inquiry of the person or persons who manage the system, or those persons directly responsible for gathering the information, the information submitted is, to the best of my knowledge and belief, true, accurate and complete. I am aware that there are significant penalties for submitting false information, including the possibility of fine and imprisonment for knowing violations. See 18 U.S.C. § 1001 and 33 USC § 1319. (Penalties under these statutes may include fines up to $10,000 and/or maximum imprisonment of between 6 months and 5 years.)

SIGNATURE OF PRINCIPAL EXECUTIVE OFFICER OR AUTHORIZED AGENT

TELEPHONE AREA	TELEPHONE NUMBER	DATE YEAR	DATE MO	DATE DAY
281	575-2824	09	10	07

COMMENT AND EXPLANATIONS OF ANY VIOLATIONS (Reference all attachments here)

PERMITTEE NAME/ADDRESS (Include Facility Name/Location if different)

NATIONAL POLLUTANT DISCHARGE ELIMINATION SYSTEM (NPDES)
DISCHARGE MONITORING REPORT (DMR)

NAME: CITY OF HOUSTON
ADDRESS: KINGWOOD CENTRAL PLANT
4545 GROVEWAY
HOUSTON TX 77087-1122
FACILITY:
LOCATION:

PERMIT NUMBER: TX0066583
DISCHARGE NUMBER: 001 B

MAJOR
M - INTERIM II
TOTAL FACILITY DISCHARGE

☐ Check here if No Discharge

MONITORING PERIOD	YEAR	MO	DAY		YEAR	MO	DAY
FROM	08	02	01	TO	08	02	29

NOTE: Read instructions before completing this form.

PARAMETER		QUANTITY OR LOADING			QUALITY OR CONCENTRATION				NO. EX	FREQUENCY OF ANALYSIS	SAMPLE TYPE
		AVERAGE	MAXIMUM	UNITS	MINIMUM	AVERAGE	MAXIMUM	UNITS			
COLIFORM, FECAL GENERAL 74055 1 0 0 EFFLUENT GROSS VALUE	SAMPLE MEASUREMENT	******	******		******	15	19		0	DAILY	GRAB
	PERMIT REQUIREMENT	******	******	**** ****	******	200 DA GEOAV	400 7 DA GEO	(13) #/100ML		DAILY	GRAB
BOD, CARBONACEOUS 05 DAY, 20C 80082 1 0 0 EFFLUENT GROSS VALUE	SAMPLE MEASUREMENT	76	******		******	2	4		0	5TIMES /WEEK	COMPOS
	PERMIT REQUIREMENT	292 DAILY AV	******	(26) LBS/DY	******	5 DAILY AV	20 DAILY MX	(19) MG/L		5TIMES /WEEK	COMPOS
	SAMPLE MEASUREMENT										
	PERMIT REQUIREMENT										
	SAMPLE MEASUREMENT										
	PERMIT REQUIREMENT										
	SAMPLE MEASUREMENT										
	PERMIT REQUIREMENT										
	SAMPLE MEASUREMENT										
	PERMIT REQUIREMENT										
	SAMPLE MEASUREMENT										
	PERMIT REQUIREMENT										

NAME/TITLE PRINCIPAL EXECUTIVE OFFICER

JUN CHANG
DEPUTY DIRECTOR

TYPED OR PRINTED

I certify under penalty of law that this document and all attachments were prepared under my direction or supervision in accordance with a system designed to assure that qualified personnel properly gather and evaluate the information submitted. Based on my inquiry of the person or persons who manage the system, or those persons directly responsible for gathering the information, the information submitted is, to the best of my knowledge and belief, true, accurate and complete. I am aware that there are significant penalties for submitting false information, including the possibility of fine and imprisonment for knowing violations. See 18 U.S.C. § 1001 and 33 USC § 1319. (Penalties under these statutes may include fines up to $10,000 and/or maximum imprisonment of between 5 months and 5 years.)

SIGNATURE OF PRINCIPAL EXECUTIVE OFFICER OR AUTHORIZED AGENT

TELEPHONE		DATE		
281	575-2824	09	10	07
AREA	NUMBER	YEAR	MO	DAY

COMMENT AND EXPLANATIONS OF ANY VIOLATIONS (Reference all attachments here)

PERMITTEE NAME/ADDRESS (Include Facility Name/Location if different)

NATIONAL POLLUTANT DISCHARGE ELIMINATION SYSTEM (NPDES)
DISCHARGE MONITORING REPORT (DMR)

NAME: CITY OF HOUSTON
ADDRESS: KINGWOOD CENTRAL PLANT
4545 GROVEWAY
HOUSTON TX 77087-1122
FACILITY:
LOCATION:

PERMIT NUMBER: TX0066583
DISCHARGE NUMBER: 001 B

MAJOR
M - INTERIM II
TOTAL FACILITY DISCHARGE

☐ Check here if No Discharge

MONITORING PERIOD	YEAR	MO	DAY		YEAR	MO	DAY
FROM	08	03	01	TO	08	03	31

NOTE: Read instructions before completing this form.

PARAMETER		QUANTITY OR LOADING AVERAGE	QUANTITY OR LOADING MAXIMUM	QUANTITY OR LOADING UNITS	QUALITY OR CONCENTRATION MINIMUM	QUALITY OR CONCENTRATION AVERAGE	QUALITY OR CONCENTRATION MAXIMUM	QUALITY OR CONCENTRATION UNITS	NO. EX	FREQUENCY OF ANALYSIS	SAMPLE TYPE
OXYGEN, DISSOLVED (DO) 00300 1 0 0 EFFLUENT GROSS VALUE	SAMPLE MEASUREMENT	******	******		6.8	******	******		0	5TIMES /WEEK	GRAB
	PERMIT REQUIREMENT	******	******	**** ****	6.0 MO MIN	******	******	(19) MG/L		5TIMES /WEEK	GRAB
PH 00400 1 0 0 EFFLUENT GROSS VALUE	SAMPLE MEASUREMENT	******	******		7.1	******	7.4		0	5TIMES /WEEK	GRAB
	PERMIT REQUIREMENT	******	******	**** ****	6.0 MINIMUM	******	9.0 MAXIMUM	(12) SU		5TIMES /WEEK	GRAB
SOLIDS, TOTAL SUSPENDED 00530 1 0 0 EFFLUENT GROSS VALUE	SAMPLE MEASUREMENT	95	******		******	2	11		0	5TIMES /WEEK	COMPOS
	PERMIT REQUIREMENT	584 DAILY AV	******	(26) LBS/DY	******	10 DAILY AV	40 DAILY MX	(19) MG/L		5TIMES /WEEK	COMPOS
NITROGEN, AMMONIA TOTAL (AS N) 00610 1 0 0 EFFLUENT GROSS VALUE	SAMPLE MEASUREMENT	6.3	******		******	0.2	0.9		0	5TIMES /WEEK	COMPOS
	PERMIT REQUIREMENT	175 DAILY AV	******	(26) LBS/DY	******	3 DAILY AV	7 DAILY MX	(19) MG/L		5TIMES /WEEK	COMPOS
FLOW, IN CONDUIT OR THRU TREATMENT PLANT 50050 P 0 0 SEE COMMENTS BELOW	SAMPLE MEASUREMENT	******	6992		******	******	******		0	CONTIN UOUS	TOTALZ
	PERMIT REQUIREMENT	******	25678 2HR PEAK	(78) GPM	******	******	******	**** ****		CONTIN UOUS	TOTALZ
FLOW, IN CONDUIT OR THRU TREATMENT PLANT 50050 Y 0 0 ANNUAL AVERAGE	SAMPLE MEASUREMENT	4.935	******		******	******	******		0	CONTIN UOUS	TOTALZ
	PERMIT REQUIREMENT	7.0 ANNL AVG	******	(03) MGD	******	******	******	**** ****		CONTIN UOUS	TOTALZ
FLOW, IN CONDUIT OR THRU TREATMENT PLANT 50050 1 0 0 EFFLUENT GROSS VALUE	SAMPLE MEASUREMENT	4.961	5.875		******	******	******		0	CONTIN UOUS	TOTALZ
	PERMIT REQUIREMENT	REPORT DAILY AV	REPORT DAILY MX	(03) MGD	******	******	******	**** ****		CONTIN UOUS	TOTALZ

NAME/TITLE PRINCIPAL EXECUTIVE OFFICER

JUN CHANG
DEPUTY DIRECTOR

TYPED OR PRINTED

I certify under penalty of law that this document and all attachments were prepared under my direction or supervision in accordance with a system designed to assure that qualified personnel properly gather and evaluate the information submitted. Based on my inquiry of the person or persons who manage the system, or those persons directly responsible for gathering the information, the information submitted is, to the best of my knowledge and belief, true, accurate and complete. I am aware that there are significant penalties for submitting false information, including the possibility of fine and imprisonment for knowing violations. See 18 U.S.C. § 1001 and 33 USC § 1319. (Penalties under these statutes may include fines up to $10,000 and or maximum imprisonment of between 6 months and 5 years.)

SIGNATURE OF PRINCIPAL EXECUTIVE OFFICER OR AUTHORIZED AGENT

TELEPHONE AREA	TELEPHONE NUMBER	DATE YEAR	DATE MO	DATE DAY
281	575-2824	09	10	07

COMMENT AND EXPLANATIONS OF ANY VIOLATIONS (Reference all attachments here)

PERMITTEE NAME/ADDRESS (Include Facility Name/Location if different)

NATIONAL POLLUTANT DISCHARGE ELIMINATION SYSTEM (NPDES)
DISCHARGE MONITORING REPORT (DMR)

NAME: CITY OF HOUSTON
ADDRESS: KINGWOOD CENTRAL PLANT
4545 GROVEWAY
HOUSTON TX 77087-1122
FACILITY
LOCATION

PERMIT NUMBER: TX0066583
DISCHARGE NUMBER: 001 B

MAJOR
M - INTERIM II
TOTAL FACILITY DISCHARGE

☐ Check here if No Discharge

MONITORING PERIOD	YEAR	MO	DAY		YEAR	MO	DAY
FROM	08	03	01	TO	08	03	31

NOTE: Read instructions before completing this form.

PARAMETER		QUANTITY OR LOADING AVERAGE	QUANTITY OR LOADING MAXIMUM	QUANTITY OR LOADING UNITS	QUALITY OR CONCENTRATION MINIMUM	QUALITY OR CONCENTRATION AVERAGE	QUALITY OR CONCENTRATION MAXIMUM	QUALITY OR CONCENTRATION UNITS	NO. EX	FREQUENCY OF ANALYSIS	SAMPLE TYPE
COLIFORM, FECAL GENERAL 74055 1 0 0 EFFLUENT GROSS VALUE	SAMPLE MEASUREMENT	******	******		******	15	16		0	DAILY	GRAB
	PERMIT REQUIREMENT	******	******	**** ****	******	200 DA GEOAV	400 7 DA GEO	(13) #/100ML		DAILY	GRAB
BOD, CARBONACEOUS 05 DAY, 20C 80082 1 0 0 EFFLUENT GROSS VALUE	SAMPLE MEASUREMENT	101	******		******	2	8		0	5TIMES /WEEK	COMPOS
	PERMIT REQUIREMENT	292 DAILY AV	******	(26) LBS/DY	******	5 DAILY AV	20 DAILY MX	(19) MG/L		5TIMES /WEEK	COMPOS
	SAMPLE MEASUREMENT										
	PERMIT REQUIREMENT										
	SAMPLE MEASUREMENT										
	PERMIT REQUIREMENT										
	SAMPLE MEASUREMENT										
	PERMIT REQUIREMENT										
	SAMPLE MEASUREMENT										
	PERMIT REQUIREMENT										
	SAMPLE MEASUREMENT										
	PERMIT REQUIREMENT										

NAME/TITLE PRINCIPAL EXECUTIVE OFFICER

JUN CHANG
DEPUTY DIRECTOR

TYPED OR PRINTED

I certify under penalty of law that this document and all attachments were prepared under my direction or supervision in accordance with a system designed to assure that qualified personnel properly gather and evaluate the information submitted. Based on my inquiry of the person or persons who manage the system, or those persons directly responsible for gathering the information, the information submitted is, to the best of my knowledge and belief, true, accurate and complete. I am aware that there are significant penalties for submitting false information, including the possibility of fine and imprisonment for knowing violations. See 18 U.S.C. § 1001 and 33 USC § 1319. (Penalties under these statutes may include fines up to $10,000 and/or maximum imprisonment of between 6 months and 5 years.)

SIGNATURE OF PRINCIPAL EXECUTIVE OFFICER OR AUTHORIZED AGENT

TELEPHONE AREA	TELEPHONE NUMBER	DATE YEAR	DATE MO	DATE DAY
281	575-2824	09	10	07

COMMENT AND EXPLANATIONS OF ANY VIOLATIONS (Reference all attachments here)

PERMITTEE NAME/ADDRESS (Include Facility Name/Location if different)

NATIONAL POLLUTANT DISCHARGE ELIMINATION SYSTEM (NPDES)
DISCHARGE MONITORING REPORT (DMR)

NAME: CITY OF HOUSTON
ADDRESS: KINGWOOD CENTRAL PLANT
4545 GROVEWAY
HOUSTON TX 77087-1122
FACILITY
LOCATION

PERMIT NUMBER: TX0066583
DISCHARGE NUMBER: 001 B

MAJOR
M - INTERIM II
TOTAL FACILITY DISCHARGE

☐ Check here if No Discharge

MONITORING PERIOD

FROM YEAR	MO	DAY	TO YEAR	MO	DAY
08	04	01	08	04	30

NOTE: Read instructions before completing this form.

PARAMETER		QUANTITY OR LOADING AVERAGE	MAXIMUM	UNITS	QUALITY OR CONCENTRATION MINIMUM	AVERAGE	MAXIMUM	UNITS	NO. EX	FREQUENCY OF ANALYSIS	SAMPLE TYPE
OXYGEN, DISSOLVED (DO) 00300 1 0 0 EFFLUENT GROSS VALUE	SAMPLE MEASUREMENT	******	******		7.0	******	******		0	5TIMES /WEEK	GRAB
	PERMIT REQUIREMENT	******	******	**** ****	6.0 MO MIN	******	******	(19) MG/L		5TIMES /WEEK	GRAB
PH 00400 1 0 0 EFFLUENT GROSS VALUE	SAMPLE MEASUREMENT	******	******		7.0	******	7.4		0	5TIMES /WEEK	GRAB
	PERMIT REQUIREMENT	******	******	**** ****	6.0 MINIMUM	******	9.0 MAXIMUM	(12) SU		5TIMES /WEEK	GRAB
SOLIDS, TOTAL SUSPENDED 00530 1 0 0 EFFLUENT GROSS VALUE	SAMPLE MEASUREMENT	109	******		******	3	7		0	5TIMES /WEEK	COMPOS
	PERMIT REQUIREMENT	584 DAILY AV	******	(26) LBS/DY	******	10 DAILY AV	40 DAILY MX	(19) MG/L		5TIMES /WEEK	COMPOS
NITROGEN, AMMONIA TOTAL (AS N) 00610 1 0 0 EFFLUENT GROSS VALUE	SAMPLE MEASUREMENT	9.2	******		******	0.2	0.5		0	5TIMES /WEEK	COMPOS
	PERMIT REQUIREMENT	175 DAILY AV	******	(26) LBS/DY	******	3 DAILY AV	7 DAILY MX	(19) MG/L		5TIMES /WEEK	COMPOS
FLOW, IN CONDUIT OR THRU TREATMENT PLANT 50050 P 0 0 SEE COMMENTS BELOW	SAMPLE MEASUREMENT	******	6738		******	******	******		0	CONTIN UOUS	TOTALZ
	PERMIT REQUIREMENT	******	25678 2HR PEAK	(78) GPM	******	******	******	**** ****		CONTIN UOUS	TOTALZ
FLOW, IN CONDUIT OR THRU TREATMENT PLANT 50050 Y 0 0 ANNUAL AVERAGE	SAMPLE MEASUREMENT	4.932	******		******	******	******		0	CONTIN UOUS	TOTALZ
	PERMIT REQUIREMENT	7.0 ANNL AVG	******	(03) MGD	******	******	******	**** ****		CONTIN UOUS	TOTALZ
FLOW, IN CONDUIT OR THRU TREATMENT PLANT 50050 1 0 0 EFFLUENT GROSS VALUE	SAMPLE MEASUREMENT	4.950	5.282		******	******	******		0	CONTIN UOUS	TOTALZ
	PERMIT REQUIREMENT	REPORT DAILY AV	REPORT DAILY MX	(03) MGD	******	******	******	**** ****		CONTIN UOUS	TOTALZ

NAME/TITLE PRINCIPAL EXECUTIVE OFFICER

JUN CHANG
DEPUTY DIRECTOR

TYPED OR PRINTED

I certify under penalty of law that this document and all attachments were prepared under my direction or supervision in accordance with a system designed to assure that qualified personnel properly gather and evaluate the information submitted. Based on my inquiry of the person or persons who manage the system, or those persons directly responsible for gathering the information, the information submitted is, to the best of my knowledge and belief, true, accurate and complete. I am aware that there are significant penalties for submitting false information, including the possibility of fine and imprisonment for knowing violations. See 18 U.S.C. § 1001 and 33 USC § 1319. (Penalties under these statutes may include fines up to $10,000 and/or maximum imprisonment of between 6 months and 5 years.)

SIGNATURE OF PRINCIPAL EXECUTIVE OFFICER OR AUTHORIZED AGENT

TELEPHONE AREA	NUMBER	DATE YEAR	MO	DAY
281	575-2824	09	10	07

COMMENT AND EXPLANATIONS OF ANY VIOLATIONS (Reference all attachments here)

PERMITTEE NAME/ADDRESS (Include Facility Name/Location if different)

NATIONAL POLLUTANT DISCHARGE ELIMINATION SYSTEM (NPDES)
DISCHARGE MONITORING REPORT (DMR)

NAME: CITY OF HOUSTON
ADDRESS: KINGWOOD CENTRAL PLANT
4545 GROVEWAY
HOUSTON TX 77087-1122
FACILITY:
LOCATION:

PERMIT NUMBER: TX0066583
DISCHARGE NUMBER: 001 B

MAJOR
M - INTERIM II
TOTAL FACILITY DISCHARGE

☐ Check here if No Discharge

MONITORING PERIOD	YEAR	MO	DAY		YEAR	MO	DAY
FROM	08	04	01	TO	08	04	30

NOTE: Read instructions before completing this form.

PARAMETER		QUANTITY OR LOADING AVERAGE	QUANTITY OR LOADING MAXIMUM	QUANTITY OR LOADING UNITS	QUALITY OR CONCENTRATION MINIMUM	QUALITY OR CONCENTRATION AVERAGE	QUALITY OR CONCENTRATION MAXIMUM	QUALITY OR CONCENTRATION UNITS	NO. EX	FREQUENCY OF ANALYSIS	SAMPLE TYPE
COLIFORM, FECAL GENERAL 74055 1 0 0 EFFLUENT GROSS VALUE	SAMPLE MEASUREMENT	******	******		******	17	27		0	DAILY	GRAB
	PERMIT REQUIREMENT	******	******	**** ****	******	200 DA GEOAV	400 7 DA GEO	(13) #/100ML		DAILY	GRAB
BOD, CARBONACEOUS 05 DAY, 20C 80082 1 0 0 EFFLUENT GROSS VALUE	SAMPLE MEASUREMENT	147	******		******	4	15		0	5TIMES /WEEK	COMPOS
	PERMIT REQUIREMENT	292 DAILY AV	******	(26) LBS/DY	******	5 DAILY AV	20 DAILY MX	(19) MG/L		5TIMES /WEEK	COMPOS
	SAMPLE MEASUREMENT										
	PERMIT REQUIREMENT										
	SAMPLE MEASUREMENT										
	PERMIT REQUIREMENT										
	SAMPLE MEASUREMENT										
	PERMIT REQUIREMENT										
	SAMPLE MEASUREMENT										
	PERMIT REQUIREMENT										
	SAMPLE MEASUREMENT										
	PERMIT REQUIREMENT										

NAME/TITLE PRINCIPAL EXECUTIVE OFFICER

JUN CHANG
DEPUTY DIRECTOR

TYPED OR PRINTED

I certify under penalty of law that this document and all attachments were prepared under my direction or supervision in accordance with a system designed to assure that qualified personnel properly gather and evaluate the information submitted. Based on my inquiry of the person or persons who manage the system, or those persons directly responsible for gathering the information, the information submitted is, to the best of my knowledge and belief, true, accurate and complete. I am aware that there are significant penalties for submitting false information, including the possibility of fine and imprisonment for knowing violations. See 18 U.S.C. § 1001 and 33 USC § 1319. (Penalties under these statutes may include fines up to $10,000 and or maximum imprisonment of between 6 months and 5 years.)

SIGNATURE OF PRINCIPAL EXECUTIVE OFFICER OR AUTHORIZED AGENT

TELEPHONE AREA	TELEPHONE NUMBER	DATE YEAR	DATE MO	DATE DAY
281	575-2824	09	10	07

COMMENT AND EXPLANATIONS OF ANY VIOLATIONS (Reference all attachments here)

PERMITTEE NAME/ADDRESS (Include Facility Name/Location if different)

NATIONAL POLLUTANT DISCHARGE ELIMINATION SYSTEM (NPDES)
DISCHARGE MONITORING REPORT (DMR)

NAME: CITY OF HOUSTON
ADDRESS: KINGWOOD CENTRAL PLANT
4545 GROVEWAY
HOUSTON TX 77087-1122
FACILITY:
LOCATION:

PERMIT NUMBER: TX0066583
DISCHARGE NUMBER: 001 B

MAJOR
M - INTERIM II
TOTAL FACILITY DISCHARGE

☐ Check here if No Discharge

MONITORING PERIOD	YEAR	MO	DAY		YEAR	MO	DAY
FROM	08	05	01	TO	08	05	31

NOTE: Read instructions before completing this form.

PARAMETER		QUANTITY OR LOADING AVERAGE	QUANTITY OR LOADING MAXIMUM	UNITS	QUALITY OR CONCENTRATION MINIMUM	QUALITY OR CONCENTRATION AVERAGE	QUALITY OR CONCENTRATION MAXIMUM	UNITS	NO. EX	FREQUENCY OF ANALYSIS	SAMPLE TYPE
OXYGEN, DISSOLVED (DO) 00300 1 0 0 EFFLUENT GROSS VALUE	SAMPLE MEASUREMENT	******	******		6.3	******	******		0	5TIMES /WEEK	GRAB
	PERMIT REQUIREMENT	******	******	**** ****	6.0 MO MIN	******	******	(19) MG/L		5TIMES /WEEK	GRAB
PH 00400 1 0 0 EFFLUENT GROSS VALUE	SAMPLE MEASUREMENT	******	******		7.0	******	7.4		0	5TIMES /WEEK	GRAB
	PERMIT REQUIREMENT	******	******	**** ****	6.0 MINIMUM	******	9.0 MAXIMUM	(12) SU		5TIMES /WEEK	GRAB
SOLIDS, TOTAL SUSPENDED 00530 1 0 0 EFFLUENT GROSS VALUE	SAMPLE MEASUREMENT	162	******		******	3	10		0	5TIMES /WEEK	COMPOS
	PERMIT REQUIREMENT	584 DAILY AV	******	(26) LBS/DY	******	10 DAILY AV	40 DAILY MX	(19) MG/L		5TIMES /WEEK	COMPOS
NITROGEN, AMMONIA TOTAL (AS N) 00610 1 0 0 EFFLUENT GROSS VALUE	SAMPLE MEASUREMENT	10.8	******		******	0.2	1.4		0	5TIMES /WEEK	COMPOS
	PERMIT REQUIREMENT	175 DAILY AV	******	(26) LBS/DY	******	3 DAILY AV	7 DAILY MX	(19) MG/L		5TIMES /WEEK	COMPOS
FLOW, IN CONDUIT OR THRU TREATMENT PLANT 50050 P 0 0 SEE COMMENTS BELOW	SAMPLE MEASUREMENT	******	11279		******	******	******		0	CONTIN UOUS	TOTALZ
	PERMIT REQUIREMENT	******	25678 2HR PEAK	(78) GPM	******	******	******	**** ****		CONTIN UOUS	TOTALZ
FLOW, IN CONDUIT OR THRU TREATMENT PLANT 50050 Y 0 0 ANNUAL AVERAGE	SAMPLE MEASUREMENT	4.936	******		******	******	******		0	CONTIN UOUS	TOTALZ
	PERMIT REQUIREMENT	7.0 ANNL AVG	******	(03) MGD	******	******	******	**** ****		CONTIN UOUS	TOTALZ
FLOW, IN CONDUIT OR THRU TREATMENT PLANT 50050 1 0 0 EFFLUENT GROSS VALUE	SAMPLE MEASUREMENT	5.311	9.973		******	******	******		0	CONTIN UOUS	TOTALZ
	PERMIT REQUIREMENT	REPORT DAILY AV	REPORT DAILY MX	(03) MGD	******	******	******	**** ****		CONTIN UOUS	TOTALZ

NAME/TITLE PRINCIPAL EXECUTIVE OFFICER

JUN CHANG
DEPUTY DIRECTOR

TYPED OR PRINTED

I certify under penalty of law that this document and all attachments were prepared under my direction or supervision in accordance with a system designed to assure that qualified personnel properly gather and evaluate the information submitted. Based on my inquiry of the person or persons who manage the system, or those persons directly responsible for gathering the information, the information submitted is, to the best of my knowledge and belief, true, accurate and complete. I am aware that there are significant penalties for submitting false information, including the possibility of fine and imprisonment for knowing violations. See 18 U.S.C. § 1001 and 33 USC § 1319. (Penalties under these statutes may include fines up to $10,000 and/or maximum imprisonment of between 6 months and 5 years.)

SIGNATURE OF PRINCIPAL EXECUTIVE OFFICER OR AUTHORIZED AGENT

TELEPHONE AREA	TELEPHONE NUMBER	DATE YEAR	DATE MO	DATE DAY
281	575-2824	09	10	07

COMMENT AND EXPLANATIONS OF ANY VIOLATIONS (Reference all attachments here)

JoeG.pdf - Adobe Reader

PERMITTEE NAME/ADDRESS (Include Facility Name/Location if different)

NATIONAL POLLUTANT DISCHARGE ELIMINATION SYSTEM (NPDES)
DISCHARGE MONITORING REPORT (DMR)

NAME: CITY OF HOUSTON
ADDRESS: KINGWOOD CENTRAL PLANT
4545 GROVEWAY
HOUSTON TX 77087-1122
FACILITY:
LOCATION:

PERMIT NUMBER: TX0066583
DISCHARGE NUMBER: 001 B

MAJOR
M - INTERIM II
TOTAL FACILITY DISCHARGE

☐ Check here if No Discharge

MONITORING PERIOD	YEAR	MO	DAY		YEAR	MO	DAY
FROM	08	05	01	TO	08	05	31

NOTE: Read instructions before completing this form.

PARAMETER		QUANTITY OR LOADING			QUALITY OR CONCENTRATION				NO. EX	FREQUENCY OF ANALYSIS	SAMPLE TYPE
		AVERAGE	MAXIMUM	UNITS	MINIMUM	AVERAGE	MAXIMUM	UNITS			
COLIFORM, FECAL GENERAL 74055 1 0 0 EFFLUENT GROSS VALUE	SAMPLE MEASUREMENT	******	******		******	18	22		0	DAILY	GRAB
	PERMIT REQUIREMENT	******	******	**** ****	******	200 DA GEOAV	400 7 DA GEO	(13) #/100ML		DAILY	GRAB
BOD, CARBONACEOUS 05 DAY, 20C 80082 1 0 0 EFFLUENT GROSS VALUE	SAMPLE MEASUREMENT	146	******		******	3	6		0	5TIMES /WEEK	COMPOS
	PERMIT REQUIREMENT	292 DAILY AV	******	(26) LBS/DY	******	5 DAILY AV	20 DAILY MX	(19) MG/L		5TIMES /WEEK	COMPOS
	SAMPLE MEASUREMENT										
	PERMIT REQUIREMENT										
	SAMPLE MEASUREMENT										
	PERMIT REQUIREMENT										
	SAMPLE MEASUREMENT										
	PERMIT REQUIREMENT										
	SAMPLE MEASUREMENT										
	PERMIT REQUIREMENT										
	SAMPLE MEASUREMENT										
	PERMIT REQUIREMENT										

NAME/TITLE PRINCIPAL EXECUTIVE OFFICER

JUN CHANG
DEPUTY DIRECTOR

TYPED OR PRINTED

I certify under penalty of law that this document and all attachments were prepared under my direction or supervision in accordance with a system designed to assure that qualified personnel properly gather and evaluate the information submitted. Based on my inquiry of the person or persons who manage the system, or those persons directly responsible for gathering the information, the information submitted is, to the best of my knowledge and belief, true, accurate and complete. I am aware that there are significant penalties for submitting false information, including the possibility of fine and imprisonment for knowing violations. See 18 U.S.C. § 1001 and 33 USC § 1319. (Penalties under these statutes may include fines up to $10,000 and or maximum imprisonment of between 6 months and 5 years.)

SIGNATURE OF PRINCIPAL EXECUTIVE OFFICER OR AUTHORIZED AGENT

TELEPHONE		DATE		
281	575-2824	09	10	07
AREA	NUMBER	YEAR	MO	DAY

COMMENT AND EXPLANATIONS OF ANY VIOLATIONS (Reference all attachments here)

PERMITTEE NAME/ADDRESS (Include Facility Name/Location if different)

NATIONAL POLLUTANT DISCHARGE ELIMINATION SYSTEM (NPDES)
DISCHARGE MONITORING REPORT (DMR)

NAME: CITY OF HOUSTON
ADDRESS: KINGWOOD CENTRAL PLANT
4545 GROVEWAY
HOUSTON TX 77087-1122
FACILITY:
LOCATION:

PERMIT NUMBER: TX0066583
DISCHARGE NUMBER: 001 B

MAJOR
M - INTERIM II
TOTAL FACILITY DISCHARGE

MONITORING PERIOD

FROM YEAR	MO	DAY	TO YEAR	MO	DAY
08	06	01	08	06	30

☐ Check here if No Discharge

NOTE: Read instructions before completing this form.

PARAMETER		QUANTITY OR LOADING AVERAGE	MAXIMUM	UNITS	QUALITY OR CONCENTRATION MINIMUM	AVERAGE	MAXIMUM	UNITS	NO. EX	FREQUENCY OF ANALYSIS	SAMPLE TYPE
OXYGEN, DISSOLVED (DO) 00300 1 0 0 EFFLUENT GROSS VALUE	SAMPLE MEASUREMENT	******	******		6.5	******	******		0	5TIMES /WEEK	GRAB
	PERMIT REQUIREMENT	******	******	**** ****	6.0 MO MIN	******	******	(19) MG/L		5TIMES /WEEK	GRAB
PH 00400 1 0 0 EFFLUENT GROSS VALUE	SAMPLE MEASUREMENT	******	******		7.1	******	7.4		0	5TIMES /WEEK	GRAB
	PERMIT REQUIREMENT	******	******	**** ****	6.0 MINIMUM	******	9.0 MAXIMUM	(12) SU		5TIMES /WEEK	GRAB
SOLIDS, TOTAL SUSPENDED 00530 1 0 0 EFFLUENT GROSS VALUE	SAMPLE MEASUREMENT	119	******		******	3	7		0	5TIMES /WEEK	COMPOS
	PERMIT REQUIREMENT	584 DAILY AV	******	(26) LBS/DY	******	10 DAILY AV	40 DAILY MX	(19) MG/L		5TIMES /WEEK	COMPOS
NITROGEN, AMMONIA TOTAL (AS N) 00610 1 0 0 EFFLUENT GROSS VALUE	SAMPLE MEASUREMENT	23.2	******		******	0.5	2.3		0	5TIMES /WEEK	COMPOS
	PERMIT REQUIREMENT	175 DAILY AV	******	(26) LBS/DY	******	3 DAILY AV	7 DAILY MX	(19) MG/L		5TIMES /WEEK	COMPOS
FLOW, IN CONDUIT OR THRU TREATMENT PLANT 50050 P 0 0 SEE COMMENTS BELOW	SAMPLE MEASUREMENT	******	10138		******	******	******		0	CONTIN UOUS	TOTALZ
	PERMIT REQUIREMENT	******	25678 2HR PEAK	(78) GPM	******	******	******	**** ****		CONTIN UOUS	TOTALZ
FLOW, IN CONDUIT OR THRU TREATMENT PLANT 50050 Y 0 0 ANNUAL AVERAGE	SAMPLE MEASUREMENT	4.966	******		******	******	******		0	CONTIN UOUS	TOTALZ
	PERMIT REQUIREMENT	7.0 ANNL AVG	******	(03) MGD	******	******	******	**** ****		CONTIN UOUS	TOTALZ
FLOW, IN CONDUIT OR THRU TREATMENT PLANT 50050 1 0 0 EFFLUENT GROSS VALUE	SAMPLE MEASUREMENT	5.193	5.778		******	******	******		0	CONTIN UOUS	TOTALZ
	PERMIT REQUIREMENT	REPORT DAILY AV	REPORT DAILY MX	(03) MGD	******	******	******	**** ****		CONTIN UOUS	TOTALZ

NAME/TITLE PRINCIPAL EXECUTIVE OFFICER

JUN CHANG
DEPUTY DIRECTOR

TYPED OR PRINTED

I certify under penalty of law that this document and all attachments were prepared under my direction or supervision in accordance with a system designed to assure that qualified personnel properly gather and evaluate the information submitted. Based on my inquiry of the person or persons who manage the system, or those persons directly responsible for gathering the information, the information submitted is, to the best of my knowledge and belief, true, accurate and complete. I am aware that there are significant penalties for submitting false information, including the possibility of fine and imprisonment for knowing violations. See 18 U.S.C. § 1001 and 33 USC § 1319. (Penalties under these statutes may include fines up to $10,000 and/or imprisonment of between 6 months and 5 years.)

SIGNATURE OF PRINCIPAL EXECUTIVE OFFICER OR AUTHORIZED AGENT

TELEPHONE AREA	NUMBER	DATE YEAR	MO	DAY
281	575-2824	09	10	07

COMMENT AND EXPLANATIONS OF ANY VIOLATIONS (Reference all attachments here)

PERMITTEE NAME/ADDRESS (Include Facility Name/Location if different)

NATIONAL POLLUTANT DISCHARGE ELIMINATION SYSTEM (NPDES)
DISCHARGE MONITORING REPORT (DMR)

NAME: CITY OF HOUSTON
ADDRESS: KINGWOOD CENTRAL PLANT
4545 GROVEWAY
HOUSTON TX 77087-1122
FACILITY:
LOCATION:

PERMIT NUMBER: TX0066583
DISCHARGE NUMBER: 001 B

MAJOR
M - INTERIM II
TOTAL FACILITY DISCHARGE

☐ Check here if No Discharge

MONITORING PERIOD	YEAR	MO	DAY		YEAR	MO	DAY
FROM	08	06	01	TO	08	06	30

NOTE: Read instructions before completing this form.

PARAMETER		QUANTITY OR LOADING AVERAGE	QUANTITY OR LOADING MAXIMUM	QUANTITY OR LOADING UNITS	QUALITY OR CONCENTRATION MINIMUM	QUALITY OR CONCENTRATION AVERAGE	QUALITY OR CONCENTRATION MAXIMUM	QUALITY OR CONCENTRATION UNITS	NO. EX	FREQUENCY OF ANALYSIS	SAMPLE TYPE
COLIFORM, FECAL GENERAL 74055 1 0 0 EFFLUENT GROSS VALUE	SAMPLE MEASUREMENT	******	******		******	16	20		0	DAILY	GRAB
	PERMIT REQUIREMENT	******	******	**** ****	******	200 DA GEOAV	400 7 DA GEO	(13) #/100ML		DAILY	GRAB
BOD, CARBONACEOUS 05 DAY, 20C 80082 1 0 0 EFFLUENT GROSS VALUE	SAMPLE MEASUREMENT	85	******		******	2	6		0	5TIMES /WEEK	COMPOS
	PERMIT REQUIREMENT	292 DAILY AV	******	(26) LBS/DY	******	5 DAILY AV	20 DAILY MX	(19) MG/L		5TIMES /WEEK	COMPOS
	SAMPLE MEASUREMENT										
	PERMIT REQUIREMENT										
	SAMPLE MEASUREMENT										
	PERMIT REQUIREMENT										
	SAMPLE MEASUREMENT										
	PERMIT REQUIREMENT										
	SAMPLE MEASUREMENT										
	PERMIT REQUIREMENT										
	SAMPLE MEASUREMENT										
	PERMIT REQUIREMENT										

NAME/TITLE PRINCIPAL EXECUTIVE OFFICER

JUN CHANG
DEPUTY DIRECTOR

TYPED OR PRINTED

I certify under penalty of law that this document and all attachments were prepared under my direction or supervision in accordance with a system designed to assure that qualified personnel properly gather and evaluate the information submitted. Based on my inquiry of the person or persons who manage the system, or those persons directly responsible for gathering the information, the information submitted is, to the best of my knowledge and belief, true, accurate and complete. I am aware that there are significant penalties for submitting false information, including the possibility of fine and imprisonment for knowing violations. See 18 U.S.C. § 1001 and 33 USC § 1319. (Penalties under these statutes may include fines up to $10,000 and/or maximum imprisonment of between 6 months and 5 years.)

SIGNATURE OF PRINCIPAL EXECUTIVE OFFICER OR AUTHORIZED AGENT

TELEPHONE AREA	TELEPHONE NUMBER	DATE YEAR	DATE MO	DATE DAY
281	575-2824	09	10	07

COMMENT AND EXPLANATIONS OF ANY VIOLATIONS (Reference all attachments here)

PERMITTEE NAME/ADDRESS (Include Facility Name/Location if different)

NATIONAL POLLUTANT DISCHARGE ELIMINATION SYSTEM (NPDES)
DISCHARGE MONITORING REPORT (DMR)

NAME: CITY OF HOUSTON
ADDRESS: KINGWOOD CENTRAL PLANT
4545 GROVEWAY
HOUSTON TX 77087-1122
FACILITY:
LOCATION:

PERMIT NUMBER: TX0066583
DISCHARGE NUMBER: 001 B

MAJOR
M - INTERIM II
TOTAL FACILITY DISCHARGE

☐ Check here if No Discharge

MONITORING PERIOD

FROM YEAR	MO	DAY	TO YEAR	MO	DAY
08	07	01	08	07	31

NOTE: Read instructions before completing this form.

PARAMETER		QUANTITY OR LOADING AVERAGE	QUANTITY OR LOADING MAXIMUM	QUANTITY OR LOADING UNITS	QUALITY OR CONCENTRATION MINIMUM	QUALITY OR CONCENTRATION AVERAGE	QUALITY OR CONCENTRATION MAXIMUM	QUALITY OR CONCENTRATION UNITS	NO. EX	FREQUENCY OF ANALYSIS	SAMPLE TYPE
OXYGEN, DISSOLVED (DO) 00300 1 0 0 EFFLUENT GROSS VALUE	SAMPLE MEASUREMENT	******	******		6.8	******	******		0	5TIMES /WEEK	GRAB
	PERMIT REQUIREMENT	******	******	**** ****	6.0 MO MIN	******	******	(19) MG/L		5TIMES /WEEK	GRAB
PH 00400 1 0 0 EFFLUENT GROSS VALUE	SAMPLE MEASUREMENT	******	******		7.1	******	7.4		0	5TIMES /WEEK	GRAB
	PERMIT REQUIREMENT	******	******	**** ****	6.0 MINIMUM	******	9.0 MAXIMUM	(12) SU		5TIMES /WEEK	GRAB
SOLIDS, TOTAL SUSPENDED 00530 1 0 0 EFFLUENT GROSS VALUE	SAMPLE MEASUREMENT	94	******		******	2	4		0	5TIMES /WEEK	COMPOS
	PERMIT REQUIREMENT	584 DAILY AV	******	(26) LBS/DY	******	10 DAILY AV	40 DAILY MX	(19) MG/L		5TIMES /WEEK	COMPOS
NITROGEN, AMMONIA TOTAL (AS N) 00610 1 0 0 EFFLUENT GROSS VALUE	SAMPLE MEASUREMENT	15.4	******		******	0.4	1.5		0	5TIMES /WEEK	COMPOS
	PERMIT REQUIREMENT	175 DAILY AV	******	(26) LBS/DY	******	3 DAILY AV	7 DAILY MX	(19) MG/L		5TIMES /WEEK	COMPOS
FLOW, IN CONDUIT OR THRU TREATMENT PLANT 50050 P 0 0 SEE COMMENTS BELOW	SAMPLE MEASUREMENT	******	7517		******	******	******		0	CONTIN UOUS	TOTALZ
	PERMIT REQUIREMENT	******	25678 2HR PEAK	(78) GPM	******	******	******	**** ****		CONTIN UOUS	TOTALZ
FLOW, IN CONDUIT OR THRU TREATMENT PLANT 50050 Y 0 0 ANNUAL AVERAGE	SAMPLE MEASUREMENT	4.984	******		******	******	******		0	CONTIN UOUS	TOTALZ
	PERMIT REQUIREMENT	7.0 ANNL AVG	******	(03) MGD	******	******	******	**** ****		CONTIN UOUS	TOTALZ
FLOW, IN CONDUIT OR THRU TREATMENT PLANT 50050 1 0 0 EFFLUENT GROSS VALUE	SAMPLE MEASUREMENT	5.177	6.100		******	******	******		0	CONTIN UOUS	TOTALZ
	PERMIT REQUIREMENT	REPORT DAILY AV	REPORT DAILY MX	(03) MGD	******	******	******	**** ****		CONTIN UOUS	TOTALZ

NAME/TITLE PRINCIPAL EXECUTIVE OFFICER

JUN CHANG
DEPUTY DIRECTOR

TYPED OR PRINTED

I certify under penalty of law that this document and all attachments were prepared under my direction or supervision in accordance with a system designed to assure that qualified personnel properly gather and evaluate the information submitted. Based on my inquiry of the person or persons who manage the system, or those persons directly responsible for gathering the information, the information submitted is, to the best of my knowledge and belief, true, accurate and complete. I am aware that there are significant penalties for submitting false information, including the possibility of fine and imprisonment for knowing violations. See 18 U.S.C. § 1001 and 33 USC § 1319. (Penalties under these statutes may include fines up to $10,000 and/or maximum imprisonment of between 6 months and 5 years.)

SIGNATURE OF PRINCIPAL EXECUTIVE OFFICER OR AUTHORIZED AGENT

TELEPHONE AREA	NUMBER	DATE YEAR	MO	DAY
281	575-2824	09	10	07

COMMENT AND EXPLANATIONS OF ANY VIOLATIONS (Reference all attachments here)

PERMITTEE NAME/ADDRESS (Include Facility Name/Location if different)

NATIONAL POLLUTANT DISCHARGE ELIMINATION SYSTEM (NPDES)
DISCHARGE MONITORING REPORT (DMR)

NAME: CITY OF HOUSTON
ADDRESS: KINGWOOD CENTRAL PLANT
4545 GROVEWAY
HOUSTON TX 77087-1122
FACILITY
LOCATION

PERMIT NUMBER: TX0066583
DISCHARGE NUMBER: 001 B

MAJOR
M - INTERIM II
TOTAL FACILITY DISCHARGE

MONITORING PERIOD

FROM YEAR	MO	DAY	TO YEAR	MO	DAY
08	07	01	08	07	31

☐ Check here if No Discharge

NOTE: Read instructions before completing this form.

PARAMETER		QUANTITY OR LOADING AVERAGE	QUANTITY OR LOADING MAXIMUM	QUANTITY OR LOADING UNITS	QUALITY OR CONCENTRATION MINIMUM	QUALITY OR CONCENTRATION AVERAGE	QUALITY OR CONCENTRATION MAXIMUM	QUALITY OR CONCENTRATION UNITS	NO. EX	FREQUENCY OF ANALYSIS	SAMPLE TYPE
COLIFORM, FECAL GENERAL 74055 1 0 0 EFFLUENT GROSS VALUE	SAMPLE MEASUREMENT	******	******		******	16	16		0	DAILY	GRAB
	PERMIT REQUIREMENT	******	******	**** ****	******	200 DA GEOAV	400 7 DA GEO	(13) #/100ML		DAILY	GRAB
BOD, CARBONACEOUS 05 DAY, 20C 80082 1 0 0 EFFLUENT GROSS VALUE	SAMPLE MEASUREMENT	124	******		******	3	9		0	5TIMES /WEEK	COMPOS
	PERMIT REQUIREMENT	292 DAILY AV	******	(26) LBS/DY	******	5 DAILY AV	20 DAILY MX	(19) MG/L		5TIMES /WEEK	COMPOS
	SAMPLE MEASUREMENT										
	PERMIT REQUIREMENT										
	SAMPLE MEASUREMENT										
	PERMIT REQUIREMENT										
	SAMPLE MEASUREMENT										
	PERMIT REQUIREMENT										
	SAMPLE MEASUREMENT										
	PERMIT REQUIREMENT										
	SAMPLE MEASUREMENT										
	PERMIT REQUIREMENT										

NAME/TITLE PRINCIPAL EXECUTIVE OFFICER

JUN CHANG
DEPUTY DIRECTOR

TYPED OR PRINTED

I certify under penalty of law that this document and all attachments were prepared under my direction or supervision in accordance with a system designed to assure that qualified personnel properly gather and evaluate the information submitted. Based on my inquiry of the person or persons who manage the system, or those persons directly responsible for gathering the information, the information submitted is, to the best of my knowledge and belief, true, accurate and complete. I am aware that there are significant penalties for submitting false information, including the possibility of fine and imprisonment for knowing violations. See 18 U.S.C. § 1001 and 33 USC § 1319. (Penalties under these statutes may include fines up to $10,000 and/or maximum imprisonment of between 6 months and 5 years.)

SIGNATURE OF PRINCIPAL EXECUTIVE OFFICER OR AUTHORIZED AGENT

TELEPHONE AREA	NUMBER	DATE YEAR	MO	DAY
281	575-2824	09	10	07

COMMENT AND EXPLANATIONS OF ANY VIOLATIONS (Reference all attachments here)

PERMITTEE NAME/ADDRESS (Include Facility Name/Location if different)

NATIONAL POLLUTANT DISCHARGE ELIMINATION SYSTEM (NPDES)
DISCHARGE MONITORING REPORT (DMR)

NAME: CITY OF HOUSTON
ADDRESS: KINGWOOD CENTRAL PLANT
4545 GROVEWAY
HOUSTON TX 77087-1122
FACILITY
LOCATION

PERMIT NUMBER: TX0066583
DISCHARGE NUMBER: 001 B

MAJOR

M - INTERIM II
TOTAL FACILITY DISCHARGE

☐ Check here if No Discharge

MONITORING PERIOD	YEAR	MO	DAY		YEAR	MO	DAY
FROM	08	08	01	TO	08	08	31

NOTE: Read instructions before completing this form.

PARAMETER		QUANTITY OR LOADING AVERAGE	QUANTITY OR LOADING MAXIMUM	QUANTITY OR LOADING UNITS	QUALITY OR CONCENTRATION MINIMUM	QUALITY OR CONCENTRATION AVERAGE	QUALITY OR CONCENTRATION MAXIMUM	QUALITY OR CONCENTRATION UNITS	NO. EX	FREQUENCY OF ANALYSIS	SAMPLE TYPE
OXYGEN, DISSOLVED (DO) 00300 1 0 0 EFFLUENT GROSS VALUE	SAMPLE MEASUREMENT	******	******		6.0	******	******		0	5TIMES /WEEK	GRAB
	PERMIT REQUIREMENT	******	******	**** ****	6.0 MO MIN	******	******	(19) MG/L		5TIMES /WEEK	GRAB
PH 00400 1 0 0 EFFLUENT GROSS VALUE	SAMPLE MEASUREMENT	******	******		7.0	******	7.5		0	5TIMES /WEEK	GRAB
	PERMIT REQUIREMENT	******	******	**** ****	6.0 MINIMUM	******	9.0 MAXIMUM	(12) SU		5TIMES /WEEK	GRAB
SOLIDS, TOTAL SUSPENDED 00530 1 0 0 EFFLUENT GROSS VALUE	SAMPLE MEASUREMENT	100	******		******	2	4		0	5TIMES /WEEK	COMPOS
	PERMIT REQUIREMENT	584 DAILY AV	******	(26) LBS/DY	******	10 DAILY AV	40 DAILY MX	(19) MG/L		5TIMES /WEEK	COMPOS
NITROGEN, AMMONIA TOTAL (AS N) 00610 1 0 0 EFFLUENT GROSS VALUE	SAMPLE MEASUREMENT	15.4	******		******	0.3	0.8		0	5TIMES /WEEK	COMPOS
	PERMIT REQUIREMENT	175 DAILY AV	******	(26) LBS/DY	******	3 DAILY AV	7 DAILY MX	(19) MG/L		5TIMES /WEEK	COMPOS
FLOW, IN CONDUIT OR THRU TREATMENT PLANT 50050 P 0 0 SEE COMMENTS BELOW	SAMPLE MEASUREMENT	******	10075		******	******	******		0	CONTIN UOUS	TOTALZ
	PERMIT REQUIREMENT	******	25678 2HR PEAK	(78) GPM	******	******	******	**** ****		CONTIN UOUS	TOTALZ
FLOW, IN CONDUIT OR THRU TREATMENT PLANT 50050 Y 0 0 ANNUAL AVERAGE	SAMPLE MEASUREMENT	5.020	******		******	******	******		0	CONTIN UOUS	TOTALZ
	PERMIT REQUIREMENT	7.0 ANNL AVG	******	(03) MGD	******	******	******	**** ****		CONTIN UOUS	TOTALZ
FLOW, IN CONDUIT OR THRU TREATMENT PLANT 50050 1 0 0 EFFLUENT GROSS VALUE	SAMPLE MEASUREMENT	5.404	7.334		******	******	******		0	CONTIN UOUS	TOTALZ
	PERMIT REQUIREMENT	REPORT DAILY AV	REPORT DAILY MX	(03) MGD	******	******	******	**** ****		CONTIN UOUS	TOTALZ

NAME/TITLE PRINCIPAL EXECUTIVE OFFICER

JUN CHANG
DEPUTY DIRECTOR

TYPED OR PRINTED

I certify under penalty of law that this document and all attachments were prepared under my direction or supervision in accordance with a system designed to assure that qualified personnel properly gather and evaluate the information submitted. Based on my inquiry of the person or persons who manage the system, or those persons directly responsible for gathering the information, the information submitted is, to the best of my knowledge and belief, true, accurate and complete. I am aware that there are significant penalties for submitting false information, including the possibility of fine and imprisonment for knowing violations. See 18 U.S.C. § 1001 and 33 USC § 1319. (Penalties under these statutes may include fines up to $10,000 and/or maximum imprisonment of between 3 months and 5 years.)

SIGNATURE OF PRINCIPAL EXECUTIVE OFFICER OR AUTHORIZED AGENT

TELEPHONE AREA	TELEPHONE NUMBER	DATE YEAR	DATE MO	DATE DAY
281	575-2824	09	10	07

COMMENT AND EXPLANATIONS OF ANY VIOLATIONS (Reference all attachments here)

PERMITTEE NAME/ADDRESS (Include Facility Name/Location if different)

NATIONAL POLLUTANT DISCHARGE ELIMINATION SYSTEM (NPDES)
DISCHARGE MONITORING REPORT (DMR)

NAME: CITY OF HOUSTON
ADDRESS: KINGWOOD CENTRAL PLANT
4545 GROVEWAY
HOUSTON TX 77087-1122
FACILITY
LOCATION

PERMIT NUMBER: TX0066583
DISCHARGE NUMBER: 001 B

MAJOR
M - INTERIM II
TOTAL FACILITY DISCHARGE

☐ Check here if No Discharge

NOTE: Read instructions before completing this form.

MONITORING PERIOD	YEAR	MO	DAY		YEAR	MO	DAY
FROM	08	08	01	TO	08	08	31

PARAMETER		QUANTITY OR LOADING AVERAGE	QUANTITY OR LOADING MAXIMUM	QUANTITY OR LOADING UNITS	QUALITY OR CONCENTRATION MINIMUM	QUALITY OR CONCENTRATION AVERAGE	QUALITY OR CONCENTRATION MAXIMUM	QUALITY OR CONCENTRATION UNITS	NO. EX	FREQUENCY OF ANALYSIS	SAMPLE TYPE
COLIFORM, FECAL GENERAL 74055 1 0 0 EFFLUENT GROSS VALUE	SAMPLE MEASUREMENT	******	******		******	14	21		0	DAILY	GRAB
	PERMIT REQUIREMENT	******	******	**** ****	******	200 DA GEOAV	400 7 DA GEO	(13) #/100ML		DAILY	GRAB
BOD, CARBONACEOUS 05 DAY, 20C 80082 1 0 0 EFFLUENT GROSS VALUE	SAMPLE MEASUREMENT	141	******		******	3	9		0	5TIMES /WEEK	COMPOS
	PERMIT REQUIREMENT	292 DAILY AV	******	(26) LBS/DY	******	5 DAILY AV	20 DAILY MX	(19) MG/L		5TIMES /WEEK	COMPOS
	SAMPLE MEASUREMENT										
	PERMIT REQUIREMENT										
	SAMPLE MEASUREMENT										
	PERMIT REQUIREMENT										
	SAMPLE MEASUREMENT										
	PERMIT REQUIREMENT										
	SAMPLE MEASUREMENT										
	PERMIT REQUIREMENT										
	SAMPLE MEASUREMENT										
	PERMIT REQUIREMENT										

NAME/TITLE PRINCIPAL EXECUTIVE OFFICER

JUN CHANG
DEPUTY DIRECTOR

TYPED OR PRINTED

I certify under penalty of law that this document and all attachments were prepared under my direction or supervision in accordance with a system designed to assure that qualified personnel properly gather and evaluate the information submitted. Based on my inquiry of the person or persons who manage the system, or those persons directly responsible for gathering the information, the information submitted is, to the best of my knowledge and belief, true, accurate and complete. I am aware that there are significant penalties for submitting false information, including the possibility of fine and imprisonment for knowing violations. See 18 U.S.C. § 1001 and 33 USC § 1319. (Penalties under these statutes may include fines up to $10,000 and/or maximum imprisonment of between 6 months and 5 years.)

SIGNATURE OF PRINCIPAL EXECUTIVE OFFICER OR AUTHORIZED AGENT

TELEPHONE AREA	TELEPHONE NUMBER	DATE YEAR	DATE MO	DATE DAY
281	575-2824	09	10	07

COMMENT AND EXPLANATIONS OF ANY VIOLATIONS (Reference all attachments here)

PERMITTEE NAME/ADDRESS (Include Facility Name/Location if different)

NATIONAL POLLUTANT DISCHARGE ELIMINATION SYSTEM (NPDES)
DISCHARGE MONITORING REPORT (DMR)

NAME CITY OF HOUSTON
ADDRESS KINGWOOD CENTRAL PLANT
4545 GROVEWAY
HOUSTON TX 77087-1122
FACILITY
LOCATION

PERMIT NUMBER	DISCHARGE NUMBER
TX0066583	001 B

MAJOR

M - INTERIM II
TOTAL FACILITY DISCHARGE

☐ Check here if No Discharge

MONITORING PERIOD	YEAR	MO	DAY	TO	YEAR	MO	DAY
FROM	08	09	01		08	09	30

NOTE: Read instructions before completing this form.

PARAMETER		QUANTITY OR LOADING AVERAGE	QUANTITY OR LOADING MAXIMUM	QUANTITY OR LOADING UNITS	QUALITY OR CONCENTRATION MINIMUM	QUALITY OR CONCENTRATION AVERAGE	QUALITY OR CONCENTRATION MAXIMUM	QUALITY OR CONCENTRATION UNITS	NO. EX	FREQUENCY OF ANALYSIS	SAMPLE TYPE
OXYGEN, DISSOLVED (DO) 00300 1 0 0 EFFLUENT GROSS VALUE	SAMPLE MEASUREMENT	******	******		6.5	******	******		0	5TIMES /WEEK	GRAB
	PERMIT REQUIREMENT	******	******	**** ****	6.0 MO MIN	******	******	(19) MG/L		5TIMES /WEEK	GRAB
PH 00400 1 0 0 EFFLUENT GROSS VALUE	SAMPLE MEASUREMENT	******	******		6.7	******	7.6		0	5TIMES /WEEK	GRAB
	PERMIT REQUIREMENT	******	******	**** ****	6.0 MINIMUM	******	9.0 MAXIMUM	(12) SU		5TIMES /WEEK	GRAB
SOLIDS, TOTAL SUSPENDED 00530 1 0 0 EFFLUENT GROSS VALUE	SAMPLE MEASUREMENT	102	******		******	3	8		0	5TIMES /WEEK	COMPOS
	PERMIT REQUIREMENT	584 DAILY AV	******	(26) LBS/DY	******	10 DAILY AV	40 DAILY MX	(19) MG/L		5TIMES /WEEK	COMPOS
NITROGEN, AMMONIA TOTAL (AS N) 00610 1 0 0 EFFLUENT GROSS VALUE	SAMPLE MEASUREMENT	11.0	******		******	0.3	1.4		0	5TIMES /WEEK	COMPOS
	PERMIT REQUIREMENT	175 DAILY AV	******	(26) LBS/DY	******	3 DAILY AV	7 DAILY MX	(19) MG/L		5TIMES /WEEK	COMPOS
FLOW, IN CONDUIT OR THRU TREATMENT PLANT 50050 P 0 0 SEE COMMENTS BELOW	SAMPLE MEASUREMENT	******	7778		******	******	******		0	CONTIN UOUS	TOTALZ
	PERMIT REQUIREMENT	******	25678 2HR PEAK	(78) GPM	******	******	******	**** ****		CONTIN UOUS	TOTALZ
FLOW, IN CONDUIT OR THRU TREATMENT PLANT 50050 Y 0 0 ANNUAL AVERAGE	SAMPLE MEASUREMENT	5.016	******		******	******	******		0	CONTIN UOUS	TOTALZ
	PERMIT REQUIREMENT	7.0 ANNL AVG	******	(03) MGD	******	******	******	**** ****		CONTIN UOUS	TOTALZ
FLOW, IN CONDUIT OR THRU TREATMENT PLANT 50050 1 0 0 EFFLUENT GROSS VALUE	SAMPLE MEASUREMENT	4.557	8.400		******	******	******		0	CONTIN UOUS	TOTALZ
	PERMIT REQUIREMENT	REPORT DAILY AV	REPORT DAILY MX	(03) MGD	******	******	******	**** ****		CONTIN UOUS	TOTALZ

NAME/TITLE PRINCIPAL EXECUTIVE OFFICER

JUN CHANG
DEPUTY DIRECTOR

TYPED OR PRINTED

I certify under penalty of law that this document and all attachments were prepared under my direction or supervision in accordance with a system designed to assure that qualified personnel properly gather and evaluate the information submitted. Based on my inquiry of the person or persons who manage the system, or those persons directly responsible for gathering the information, the information submitted is, to the best of my knowledge and belief, true, accurate and complete. I am aware that there are significant penalties for submitting false information, including the possibility of fine and imprisonment for knowing violations. See 18 U.S.C. § 1001 and 33 USC § 1319. (Penalties under these statutes may include fines up to $10,000 and/or maximum imprisonment of between 6 months and 5 years.)

SIGNATURE OF PRINCIPAL EXECUTIVE OFFICER OR AUTHORIZED AGENT

TELEPHONE AREA	TELEPHONE NUMBER	DATE YEAR	DATE MO	DATE DAY
281	575-2824	09	10	07

COMMENT AND EXPLANATIONS OF ANY VIOLATIONS (Reference all attachments here)

PERMITTEE NAME/ADDRESS (Include Facility Name/Location if different)

NATIONAL POLLUTANT DISCHARGE ELIMINATION SYSTEM (NPDES)
DISCHARGE MONITORING REPORT (DMR)

NAME: CITY OF HOUSTON
ADDRESS: KINGWOOD CENTRAL PLANT
4545 GROVEWAY
HOUSTON TX 77087-1122
FACILITY:
LOCATION:

PERMIT NUMBER: TX0066583
DISCHARGE NUMBER: 001 B

MAJOR
M - INTERIM II
TOTAL FACILITY DISCHARGE

☐ Check here if No Discharge

MONITORING PERIOD	YEAR	MO	DAY		YEAR	MO	DAY
FROM	08	09	01	TO	08	09	30

NOTE: Read instructions before completing this form.

PARAMETER		QUANTITY OR LOADING AVERAGE	QUANTITY OR LOADING MAXIMUM	QUANTITY OR LOADING UNITS	QUALITY OR CONCENTRATION MINIMUM	QUALITY OR CONCENTRATION AVERAGE	QUALITY OR CONCENTRATION MAXIMUM	QUALITY OR CONCENTRATION UNITS	NO. EX	FREQUENCY OF ANALYSIS	SAMPLE TYPE
COLIFORM, FECAL GENERAL 74055 1 0 0 EFFLUENT GROSS VALUE	SAMPLE MEASUREMENT	******	******		******	14	14		0	DAILY	GRAB
	PERMIT REQUIREMENT	******	******	**** ****	******	200 DA GEOAV	400 7 DA GEO	(13) #/100ML		DAILY	GRAB
BOD, CARBONACEOUS 05 DAY, 20C 80082 1 0 0 EFFLUENT GROSS VALUE	SAMPLE MEASUREMENT	111	******		******	3	10		0	5TIMES /WEEK	COMPOS
	PERMIT REQUIREMENT	292 DAILY AV	******	(26) LBS/DY	******	5 DAILY AV	20 DAILY MX	(19) MG/L		5TIMES /WEEK	COMPOS
	SAMPLE MEASUREMENT										
	PERMIT REQUIREMENT										
	SAMPLE MEASUREMENT										
	PERMIT REQUIREMENT										
	SAMPLE MEASUREMENT										
	PERMIT REQUIREMENT										
	SAMPLE MEASUREMENT										
	PERMIT REQUIREMENT										
	SAMPLE MEASUREMENT										
	PERMIT REQUIREMENT										

NAME/TITLE PRINCIPAL EXECUTIVE OFFICER

JUN CHANG
DEPUTY DIRECTOR

TYPED OR PRINTED

I certify under penalty of law that this document and all attachments were prepared under my direction or supervision in accordance with a system designed to assure that qualified personnel properly gather and evaluate the information submitted. Based on my inquiry of the person or persons who manage the system, or those persons directly responsible for gathering the information, the information submitted is, to the best of my knowledge and belief, true, accurate and complete. I am aware that there are significant penalties for submitting false information, including the possibility of fine and imprisonment for knowing violations. See 18 U.S.C. § 1001 and 33 USC § 1319. (Penalties under these statutes may include fines up to $10,000 and or maximum imprisonment of between 6 months and 5 years.)

SIGNATURE OF PRINCIPAL EXECUTIVE OFFICER OR AUTHORIZED AGENT

TELEPHONE AREA	TELEPHONE NUMBER	DATE YEAR	DATE MO	DATE DAY
281	575-2824	09	10	07

COMMENT AND EXPLANATIONS OF ANY VIOLATIONS (Reference all attachments here)

PERMITTEE NAME/ADDRESS (Include Facility Name/Location if different)

NATIONAL POLLUTANT DISCHARGE ELIMINATION SYSTEM (NPDES)
DISCHARGE MONITORING REPORT (DMR)

NAME: CITY OF HOUSTON
ADDRESS: KINGWOOD CENTRAL PLANT
4545 GROVEWAY
HOUSTON TX 77087-1122
FACILITY
LOCATION

PERMIT NUMBER: TX0066583
DISCHARGE NUMBER: 001 B

MAJOR
M - INTERIM II
TOTAL FACILITY DISCHARGE

☐ Check here if No Discharge

MONITORING PERIOD	YEAR	MO	DAY		YEAR	MO	DAY
FROM	08	10	01	TO	08	10	31

NOTE: Read instructions before completing this form.

PARAMETER		QUANTITY OR LOADING AVERAGE	QUANTITY OR LOADING MAXIMUM	QUANTITY OR LOADING UNITS	QUALITY OR CONCENTRATION MINIMUM	QUALITY OR CONCENTRATION AVERAGE	QUALITY OR CONCENTRATION MAXIMUM	QUALITY OR CONCENTRATION UNITS	NO. EX	FREQUENCY OF ANALYSIS	SAMPLE TYPE
OXYGEN, DISSOLVED (DO) 00300 1 0 0 EFFLUENT GROSS VALUE	SAMPLE MEASUREMENT	******	******		6.2	******	******		0	5TIMES /WEEK	GRAB
	PERMIT REQUIREMENT	******	******	**** ****	6.0 MO MIN	******	******	(19) MG/L		5TIMES /WEEK	GRAB
PH 00400 1 0 0 EFFLUENT GROSS VALUE	SAMPLE MEASUREMENT	******	******		6.8	******	7.2		0	5TIMES /WEEK	GRAB
	PERMIT REQUIREMENT	******	******	**** ****	6.0 MINIMUM	******	9.0 MAXIMUM	(12) SU		5TIMES /WEEK	GRAB
SOLIDS, TOTAL SUSPENDED 00530 1 0 0 EFFLUENT GROSS VALUE	SAMPLE MEASUREMENT	93	******		******	2	4		0	5TIMES /WEEK	COMPOS
	PERMIT REQUIREMENT	584 DAILY AV	******	(26) LBS/DY	******	10 DAILY AV	40 DAILY MX	(19) MG/L		5TIMES /WEEK	COMPOS
NITROGEN, AMMONIA TOTAL (AS N) 00610 1 0 0 EFFLUENT GROSS VALUE	SAMPLE MEASUREMENT	10.0	******		******	0.2	0.5		0	5TIMES /WEEK	COMPOS
	PERMIT REQUIREMENT	175 DAILY AV	******	(26) LBS/DY	******	3 DAILY AV	7 DAILY MX	(19) MG/L		5TIMES /WEEK	COMPOS
FLOW, IN CONDUIT OR THRU TREATMENT PLANT 50050 P 0 0 SEE COMMENTS BELOW	SAMPLE MEASUREMENT	******	16467		******	******	******		0	CONTIN UOUS	TOTALZ
	PERMIT REQUIREMENT	******	25678 2HR PEAK	(78) GPM	******	******	******	**** ****		CONTIN UOUS	TOTALZ
FLOW, IN CONDUIT OR THRU TREATMENT PLANT 50050 Y 0 0 ANNUAL AVERAGE	SAMPLE MEASUREMENT	5.043	******		******	******	******		0	CONTIN UOUS	TOTALZ
	PERMIT REQUIREMENT	7.0 ANNL AVG	******	(03) MGD	******	******	******	**** ****		CONTIN UOUS	TOTALZ
FLOW, IN CONDUIT OR THRU TREATMENT PLANT 50050 1 0 0 EFFLUENT GROSS VALUE	SAMPLE MEASUREMENT	5.179	9.275		******	******	******		0	CONTIN UOUS	TOTALZ
	PERMIT REQUIREMENT	REPORT DAILY AV	REPORT DAILY MX	(03) MGD	******	******	******	**** ****		CONTIN UOUS	TOTALZ

NAME/TITLE PRINCIPAL EXECUTIVE OFFICER
JUN CHANG
DEPUTY DIRECTOR
TYPED OR PRINTED

I certify under penalty of law that this document and all attachments were prepared under my direction or supervision in accordance with a system designed to assure that qualified personnel properly gather and evaluate the information submitted. Based on my inquiry of the person or persons who manage the system, or those persons directly responsible for gathering the information, the information submitted is, to the best of my knowledge and belief, true, accurate and complete. I am aware that there are significant penalties for submitting false information, including the possibility of fine and imprisonment for knowing violations. See 18 U.S.C. § 1001 and 33 USC § 1319. (Penalties under these statutes may include fines up to $10,000 and/or maximum imprisonment of between 6 months and 5 years.)

SIGNATURE OF PRINCIPAL EXECUTIVE OFFICER OR AUTHORIZED AGENT

TELEPHONE AREA	TELEPHONE NUMBER	DATE YEAR	DATE MO	DATE DAY
281	575-2824	09	10	07

COMMENT AND EXPLANATIONS OF ANY VIOLATIONS (Reference all attachments here)

PERMITTEE NAME/ADDRESS (Include Facility Name/Location if different)

NATIONAL POLLUTANT DISCHARGE ELIMINATION SYSTEM (NPDES)
DISCHARGE MONITORING REPORT (DMR)

NAME: CITY OF HOUSTON
ADDRESS: KINGWOOD CENTRAL PLANT
4545 GROVEWAY
HOUSTON TX 77087-1122
FACILITY:
LOCATION:

PERMIT NUMBER: TX0066583
DISCHARGE NUMBER: 001 B

MAJOR
M - INTERIM II
TOTAL FACILITY DISCHARGE

☐ Check here if No Discharge

MONITORING PERIOD	YEAR	MO	DAY		YEAR	MO	DAY
FROM	08	10	01	TO	08	10	31

NOTE: Read instructions before completing this form.

PARAMETER		QUANTITY OR LOADING AVERAGE	QUANTITY OR LOADING MAXIMUM	QUANTITY OR LOADING UNITS	QUALITY OR CONCENTRATION MINIMUM	QUALITY OR CONCENTRATION AVERAGE	QUALITY OR CONCENTRATION MAXIMUM	QUALITY OR CONCENTRATION UNITS	NO. EX	FREQUENCY OF ANALYSIS	SAMPLE TYPE
COLIFORM, FECAL GENERAL 74055 1 0 0 EFFLUENT GROSS VALUE	SAMPLE MEASUREMENT	******	******		******	14	14		0	DAILY	GRAB
	PERMIT REQUIREMENT	******	******	**** ****	******	200 DA GEOAV	400 7 DA GEO	(13) #/100ML		DAILY	GRAB
BOD, CARBONACEOUS 05 DAY, 20C 80082 1 0 0 EFFLUENT GROSS VALUE	SAMPLE MEASUREMENT	100	******		******	2	5		0	5TIMES /WEEK	COMPOS
	PERMIT REQUIREMENT	292 DAILY AV	******	(26) LBS/DY	******	5 DAILY AV	20 DAILY MX	(19) MG/L		5TIMES /WEEK	COMPOS
	SAMPLE MEASUREMENT										
	PERMIT REQUIREMENT										
	SAMPLE MEASUREMENT										
	PERMIT REQUIREMENT										
	SAMPLE MEASUREMENT										
	PERMIT REQUIREMENT										
	SAMPLE MEASUREMENT										
	PERMIT REQUIREMENT										
	SAMPLE MEASUREMENT										
	PERMIT REQUIREMENT										

NAME/TITLE PRINCIPAL EXECUTIVE OFFICER

JUN CHANG
DEPUTY DIRECTOR

TYPED OR PRINTED

I certify under penalty of law that this document and all attachments were prepared under my direction or supervision in accordance with a system designed to assure that qualified personnel properly gather and evaluate the information submitted. Based on my inquiry of the person or persons who manage the system, or those persons directly responsible for gathering the information, the information submitted is, to the best of my knowledge and belief, true, accurate and complete. I am aware that there are significant penalties for submitting false information, including the possibility of fine and imprisonment for knowing violations. See 18 U.S.C. § 1001 and 33 USC § 1319. (Penalties under these statutes may include fines up to $10,000 and/or maximum imprisonment of between 6 months and 5 years.)

SIGNATURE OF PRINCIPAL EXECUTIVE OFFICER OR AUTHORIZED AGENT

TELEPHONE AREA	TELEPHONE NUMBER	DATE YEAR	DATE MO	DATE DAY
281	575-2824	09	10	07

COMMENT AND EXPLANATIONS OF ANY VIOLATIONS (Reference all attachments here)

PERMITTEE NAME/ADDRESS (Include Facility Name/Location if different)

NATIONAL POLLUTANT DISCHARGE ELIMINATION SYSTEM (NPDES)
DISCHARGE MONITORING REPORT (DMR)

NAME: CITY OF HOUSTON
ADDRESS: KINGWOOD CENTRAL PLANT
4545 GROVEWAY
HOUSTON TX 77087-1122
FACILITY
LOCATION

PERMIT NUMBER: TX0066583
DISCHARGE NUMBER: 001 B

MAJOR
M - INTERIM II
TOTAL FACILITY DISCHARGE

☐ Check here if No Discharge

MONITORING PERIOD	YEAR	MO	DAY		YEAR	MO	DAY
FROM	08	11	01	TO	08	11	30

NOTE: Read instructions before completing this form.

PARAMETER		QUANTITY OR LOADING AVERAGE	QUANTITY OR LOADING MAXIMUM	QUANTITY OR LOADING UNITS	QUALITY OR CONCENTRATION MINIMUM	QUALITY OR CONCENTRATION AVERAGE	QUALITY OR CONCENTRATION MAXIMUM	QUALITY OR CONCENTRATION UNITS	NO. EX	FREQUENCY OF ANALYSIS	SAMPLE TYPE
OXYGEN, DISSOLVED (DO) 00300 1 0 0 EFFLUENT GROSS VALUE	SAMPLE MEASUREMENT	******	******		6.2	******	******		0	5TIMES /WEEK	GRAB
	PERMIT REQUIREMENT	******	******	**** ****	6.0 MO MIN	******	******	(19) MG/L		5TIMES /WEEK	GRAB
PH 00400 1 0 0 EFFLUENT GROSS VALUE	SAMPLE MEASUREMENT	******	******		6.9	******	7.9		0	5TIMES /WEEK	GRAB
	PERMIT REQUIREMENT	******	******	**** ****	6.0 MINIMUM	******	9.0 MAXIMUM	(12) SU		5TIMES /WEEK	GRAB
SOLIDS, TOTAL SUSPENDED 00530 1 0 0 EFFLUENT GROSS VALUE	SAMPLE MEASUREMENT	97	******		******	2	6		0	5TIMES /WEEK	COMPOS
	PERMIT REQUIREMENT	584 DAILY AV	******	(26) LBS/DY	******	10 DAILY AV	40 DAILY MX	(19) MG/L		5TIMES /WEEK	COMPOS
NITROGEN, AMMONIA TOTAL (AS N) 00610 1 0 0 EFFLUENT GROSS VALUE	SAMPLE MEASUREMENT	22.0	******		******	0.5	8.4		1	5TIMES /WEEK	COMPOS
	PERMIT REQUIREMENT	175 DAILY AV	******	(26) LBS/DY	******	3 DAILY AV	7 DAILY MX	(19) MG/L		5TIMES /WEEK	COMPOS
FLOW, IN CONDUIT OR THRU TREATMENT PLANT 50050 P 0 0 SEE COMMENTS BELOW	SAMPLE MEASUREMENT	******	14850		******	******	******		0	CONTIN UOUS	TOTALZ
	PERMIT REQUIREMENT	******	25678 2HR PEAK	(78) GPM	******	******	******	**** ****		CONTIN UOUS	TOTALZ
FLOW, IN CONDUIT OR THRU TREATMENT PLANT 50050 Y 0 0 ANNUAL AVERAGE	SAMPLE MEASUREMENT	5.079	******		******	******	******		0	CONTIN UOUS	TOTALZ
	PERMIT REQUIREMENT	7.0 ANNL AVG	******	(03) MGD	******	******	******	**** ****		CONTIN UOUS	TOTALZ
FLOW, IN CONDUIT OR THRU TREATMENT PLANT 50050 1 0 0 EFFLUENT GROSS VALUE	SAMPLE MEASUREMENT	5.226	9.449		******	******	******		0	CONTIN UOUS	TOTALZ
	PERMIT REQUIREMENT	REPORT DAILY AV	REPORT DAILY MX	(03) MGD	******	******	******	**** ****		CONTIN UOUS	TOTALZ

NAME/TITLE PRINCIPAL EXECUTIVE OFFICER

JUN CHANG
DEPUTY DIRECTOR

TYPED OR PRINTED

I certify under penalty of law that this document and all attachments were prepared under my direction or supervision in accordance with a system designed to assure that qualified personnel properly gather and evaluate the information submitted. Based on my inquiry of the person or persons who manage the system, or those persons directly responsible for gathering the information, the information submitted is, to the best of my knowledge and belief, true, accurate and complete. I am aware that there are significant penalties for submitting false information, including the possibility of fine and imprisonment for knowing violations. See 18 U.S.C. § 1001 and 33 USC § 1319. (Penalties under these statutes may include fines up to $10,000 and/or maximum imprisonment of between 6 months and 5 years.)

SIGNATURE OF PRINCIPAL EXECUTIVE OFFICER OR AUTHORIZED AGENT

TELEPHONE AREA	TELEPHONE NUMBER	DATE YEAR	DATE MO	DATE DAY
281	575-2824	09	10	07

COMMENT AND EXPLANATIONS OF ANY VIOLATIONS (Reference all attachments here)

PERMITTEE NAME/ADDRESS (Include Facility Name/Location if different)

NATIONAL POLLUTANT DISCHARGE ELIMINATION SYSTEM (NPDES)
DISCHARGE MONITORING REPORT (DMR)

NAME: CITY OF HOUSTON
ADDRESS: KINGWOOD CENTRAL PLANT
4545 GROVEWAY
HOUSTON TX 77087-1122
FACILITY
LOCATION

TX0066583 — PERMIT NUMBER
001 B — DISCHARGE NUMBER

MAJOR
M - INTERIM II
TOTAL FACILITY DISCHARGE

☐ Check here if No Discharge

MONITORING PERIOD	YEAR	MO	DAY		YEAR	MO	DAY
FROM	08	11	01	TO	08	11	30

NOTE: Read instructions before completing this form.

PARAMETER		QUANTITY OR LOADING AVERAGE	QUANTITY OR LOADING MAXIMUM	QUANTITY OR LOADING UNITS	QUALITY OR CONCENTRATION MINIMUM	QUALITY OR CONCENTRATION AVERAGE	QUALITY OR CONCENTRATION MAXIMUM	QUALITY OR CONCENTRATION UNITS	NO. EX	FREQUENCY OF ANALYSIS	SAMPLE TYPE
COLIFORM, FECAL GENERAL 74055 1 0 0 EFFLUENT GROSS VALUE	SAMPLE MEASUREMENT	******	******		******	14	16		0	DAILY	GRAB
	PERMIT REQUIREMENT	******	******	**** ****	******	200 DA GEOAV	400 7 DA GEO	(13) #/100ML		DAILY	GRAB
BOD, CARBONACEOUS 05 DAY, 20C 80082 1 0 0 EFFLUENT GROSS VALUE	SAMPLE MEASUREMENT	102	******		******	2	6		0	5TIMES /WEEK	COMPOS
	PERMIT REQUIREMENT	292 DAILY AV	******	(26) LBS/DY	******	5 DAILY AV	20 DAILY MX	(19) MG/L		5TIMES /WEEK	COMPOS
	SAMPLE MEASUREMENT										
	PERMIT REQUIREMENT										
	SAMPLE MEASUREMENT										
	PERMIT REQUIREMENT										
	SAMPLE MEASUREMENT										
	PERMIT REQUIREMENT										
	SAMPLE MEASUREMENT										
	PERMIT REQUIREMENT										
	SAMPLE MEASUREMENT										
	PERMIT REQUIREMENT										

NAME/TITLE PRINCIPAL EXECUTIVE OFFICER
JUN CHANG
DEPUTY DIRECTOR
TYPED OR PRINTED

I certify under penalty of law that this document and all attachments were prepared under my direction or supervision in accordance with a system designed to assure that qualified personnel properly gather and evaluate the information submitted. Based on my inquiry of the person or persons who manage the system, or those persons directly responsible for gathering the information, the information submitted is, to the best of my knowledge and belief, true, accurate and complete. I am aware that there are significant penalties for submitting false information, including the possibility of fine and imprisonment for knowing violations. See 18 U.S.C. § 1001 and 33 USC § 1319. (Penalties under these statutes may include fines up to $10,000 and/or maximum imprisonment of between 6 months and 5 years.)

SIGNATURE OF PRINCIPAL EXECUTIVE OFFICER OR AUTHORIZED AGENT

TELEPHONE AREA	TELEPHONE NUMBER	DATE YEAR	DATE MO	DATE DAY
281	575-2824	09	10	07

COMMENT AND EXPLANATIONS OF ANY VIOLATIONS (Reference all attachments here)

PERMITTEE NAME/ADDRESS (Include Facility Name/Location if different)

NATIONAL POLLUTANT DISCHARGE ELIMINATION SYSTEM (NPDES)
DISCHARGE MONITORING REPORT (DMR)

NAME CITY OF HOUSTON
ADDRESS KINGWOOD CENTRAL PLANT
4545 GROVEWAY
HOUSTON TX 77087-1122
FACILITY
LOCATION

TX0066583
PERMIT NUMBER

001 B
DISCHARGE NUMBER

MAJOR

M - INTERIM II
TOTAL FACILITY DISCHARGE

☐ Check here if No Discharge

MONITORING PERIOD	YEAR	MO	DAY		YEAR	MO	DAY
FROM	08	12	01	TO	08	12	31

NOTE: Read instructions before completing this form.

PARAMETER		QUANTITY OR LOADING			QUALITY OR CONCENTRATION				NO. EX	FREQUENCY OF ANALYSIS	SAMPLE TYPE
		AVERAGE	MAXIMUM	UNITS	MINIMUM	AVERAGE	MAXIMUM	UNITS			
OXYGEN, DISSOLVED (DO) 00300 1 0 0 EFFLUENT GROSS VALUE	SAMPLE MEASUREMENT	******	******		7.1	******	******		0	5TIMES /WEEK	GRAB
	PERMIT REQUIREMENT	******	******	**** ****	6.0 MO MIN	******	******	(19) MG/L		5TIMES /WEEK	GRAB
PH 00400 1 0 0 EFFLUENT GROSS VALUE	SAMPLE MEASUREMENT	******	******		7.1	******	7.9		0	5TIMES /WEEK	GRAB
	PERMIT REQUIREMENT	******	******	**** ****	6.0 MINIMUM	******	9.0 MAXIMUM	(12) SU		5TIMES /WEEK	GRAB
SOLIDS, TOTAL SUSPENDED 00530 1 0 0 EFFLUENT GROSS VALUE	SAMPLE MEASUREMENT	89	******		******	2	3		0	5TIMES /WEEK	COMPOS
	PERMIT REQUIREMENT	584 DAILY AV	******	(26) LBS/DY	******	10 DAILY AV	40 DAILY MX	(19) MG/L		5TIMES /WEEK	COMPOS
NITROGEN, AMMONIA TOTAL (AS N) 00610 1 0 0 EFFLUENT GROSS VALUE	SAMPLE MEASUREMENT	8.9	******		******	0.2	1.7		0	5TIMES /WEEK	COMPOS
	PERMIT REQUIREMENT	175 DAILY AV	******	(26) LBS/DY	******	3 DAILY AV	7 DAILY MX	(19) MG/L		5TIMES /WEEK	COMPOS
FLOW, IN CONDUIT OR THRU TREATMENT PLANT 50050 P 0 0 SEE COMMENTS BELOW	SAMPLE MEASUREMENT	******	11308		******	******	******		0	CONTIN UOUS	TOTALZ
	PERMIT REQUIREMENT	******	25678 2HR PEAK	(78) GPM	******	******	******	**** ****		CONTIN UOUS	TOTALZ
FLOW, IN CONDUIT OR THRU TREATMENT PLANT 50050 Y 0 0 ANNUAL AVERAGE	SAMPLE MEASUREMENT	5.112	******		******	******	******		0	CONTIN UOUS	TOTALZ
	PERMIT REQUIREMENT	7.0 ANNL AVG	******	(03) MGD	******	******	******	**** ****		CONTIN UOUS	TOTALZ
FLOW, IN CONDUIT OR THRU TREATMENT PLANT 50050 1 0 0 EFFLUENT GROSS VALUE	SAMPLE MEASUREMENT	5.221	5.962		******	******	******		0	CONTIN UOUS	TOTALZ
	PERMIT REQUIREMENT	REPORT DAILY AV	REPORT DAILY MX	(03) MGD	******	******	******	**** ****		CONTIN UOUS	TOTALZ

NAME/TITLE PRINCIPAL EXECUTIVE OFFICER

JUN CHANG
DEPUTY DIRECTOR

TYPED OR PRINTED

I certify under penalty of law that this document and all attachments were prepared under my direction or supervision in accordance with a system designed to assure that qualified personnel properly gather and evaluate the information submitted. Based on my inquiry of the person or persons who manage the system, or those persons directly responsible for gathering the information, the information submitted is, to the best of my knowledge and belief, true, accurate and complete. I am aware that there are significant penalties for submitting false information, including the possibility of fine and imprisonment for knowing violations. See 18 U.S.C. § 1001 and 33 USC § 1319. (Penalties under these statutes may include fines up to $10,000 and/or maximum imprisonment of between 6 months and 5 years.)

SIGNATURE OF PRINCIPAL EXECUTIVE OFFICER OR AUTHORIZED AGENT

TELEPHONE		DATE		
AREA	NUMBER	YEAR	MO	DAY
281	575-2824	09	10	07

COMMENT AND EXPLANATIONS OF ANY VIOLATIONS (Reference all attachments here)

PERMITTEE NAME/ADDRESS (Include Facility Name/Location if different)

NATIONAL POLLUTANT DISCHARGE ELIMINATION SYSTEM (NPDES)
DISCHARGE MONITORING REPORT (DMR)

NAME: CITY OF HOUSTON
ADDRESS: KINGWOOD CENTRAL PLANT
4545 GROVEWAY
HOUSTON TX 77087-1122
FACILITY:
LOCATION:

PERMIT NUMBER: TX0066583
DISCHARGE NUMBER: 001 B

MAJOR
M - INTERIM II
TOTAL FACILITY DISCHARGE

☐ Check here if No Discharge

MONITORING PERIOD	YEAR	MO	DAY		YEAR	MO	DAY
FROM	08	12	01	TO	08	12	31

NOTE: Read instructions before completing this form.

PARAMETER		QUANTITY OR LOADING AVERAGE	QUANTITY OR LOADING MAXIMUM	QUANTITY OR LOADING UNITS	QUALITY OR CONCENTRATION MINIMUM	QUALITY OR CONCENTRATION AVERAGE	QUALITY OR CONCENTRATION MAXIMUM	QUALITY OR CONCENTRATION UNITS	NO. EX	FREQUENCY OF ANALYSIS	SAMPLE TYPE
COLIFORM, FECAL GENERAL 74055 1 0 0 EFFLUENT GROSS VALUE	SAMPLE MEASUREMENT	******	******		******	15	18		0	DAILY	GRAB
	PERMIT REQUIREMENT	******	******	**** ****	******	200 DA GEOAV	400 7 DA GEO	(13) #/100ML		DAILY	GRAB
BOD, CARBONACEOUS 05 DAY, 20C 80082 1 0 0 EFFLUENT GROSS VALUE	SAMPLE MEASUREMENT	80	******		******	2	5		0	5TIMES /WEEK	COMPOS
	PERMIT REQUIREMENT	292 DAILY AV	******	(26) LBS/DY	******	5 DAILY AV	20 DAILY MX	(19) MG/L		5TIMES /WEEK	COMPOS
	SAMPLE MEASUREMENT										
	PERMIT REQUIREMENT										
	SAMPLE MEASUREMENT										
	PERMIT REQUIREMENT										
	SAMPLE MEASUREMENT										
	PERMIT REQUIREMENT										
	SAMPLE MEASUREMENT										
	PERMIT REQUIREMENT										
	SAMPLE MEASUREMENT										
	PERMIT REQUIREMENT										

NAME/TITLE PRINCIPAL EXECUTIVE OFFICER

JUN CHANG
DEPUTY DIRECTOR

TYPED OR PRINTED

I certify under penalty of law that this document and all attachments were prepared under my direction or supervision in accordance with a system designed to assure that qualified personnel properly gather and evaluate the information submitted. Based on my inquiry of the person or persons who manage the system, or those persons directly responsible for gathering the information, the information submitted is, to the best of my knowledge and belief, true, accurate and complete. I am aware that there are significant penalties for submitting false information, including the possibility of fine and imprisonment for knowing violations. See 18 U.S.C. § 1001 and 33 USC § 1319. (Penalties under these statutes may include fines up to $10,000 and/or minimum imprisonment of between 6 months and 5 years.)

SIGNATURE OF PRINCIPAL EXECUTIVE OFFICER OR AUTHORIZED AGENT

TELEPHONE AREA	TELEPHONE NUMBER	DATE YEAR	DATE MO	DATE DAY
281	575-2824	09	10	07

COMMENT AND EXPLANATIONS OF ANY VIOLATIONS (Reference all attachments here)

PERMITTEE NAME/ADDRESS (Include Facility Name/Location if different)

NATIONAL POLLUTANT DISCHARGE ELIMINATION SYSTEM (NPDES)
DISCHARGE MONITORING REPORT (DMR)

NAME: CITY OF HOUSTON
ADDRESS: KINGWOOD CENTRAL PLANT
4545 GROVEWAY
HOUSTON TX 77087-1122
FACILITY
LOCATION

PERMIT NUMBER: TX0066583
DISCHARGE NUMBER: 001 B

MAJOR
M - INTERIM II
TOTAL FACILITY DISCHARGE

☐ Check here if No Discharge

MONITORING PERIOD	YEAR	MO	DAY		YEAR	MO	DAY
FROM	09	01	01	TO	09	01	31

NOTE: Read instructions before completing this form.

PARAMETER		QUANTITY OR LOADING AVERAGE	QUANTITY OR LOADING MAXIMUM	QUANTITY OR LOADING UNITS	QUALITY OR CONCENTRATION MINIMUM	QUALITY OR CONCENTRATION AVERAGE	QUALITY OR CONCENTRATION MAXIMUM	QUALITY OR CONCENTRATION UNITS	NO. EX	FREQUENCY OF ANALYSIS	SAMPLE TYPE
OXYGEN, DISSOLVED (DO) 00300 1 0 0 EFFLUENT GROSS VALUE	SAMPLE MEASUREMENT	******	******		6.8	******	******		0	5TIMES /WEEK	GRAB
	PERMIT REQUIREMENT	******	******	**** ****	6.0 MO MIN	******	******	(19) MG/L		5TIMES /WEEK	GRAB
PH 00400 1 0 0 EFFLUENT GROSS VALUE	SAMPLE MEASUREMENT	******	******		6.9	******	7.7		0	5TIMES /WEEK	GRAB
	PERMIT REQUIREMENT	******	******	**** ****	6.0 MINIMUM	******	9.0 MAXIMUM	(12) SU		5TIMES /WEEK	GRAB
SOLIDS, TOTAL SUSPENDED 00530 1 0 0 EFFLUENT GROSS VALUE	SAMPLE MEASUREMENT	90	******		******	2	4		0	5TIMES /WEEK	COMPOS
	PERMIT REQUIREMENT	584 DAILY AV	******	(26) LBS/DY	******	10 DAILY AV	40 DAILY MX	(19) MG/L		5TIMES /WEEK	COMPOS
NITROGEN, AMMONIA TOTAL (AS N) 00610 1 0 0 EFFLUENT GROSS VALUE	SAMPLE MEASUREMENT	20.8	******		******	0.5	8.1		1	5TIMES /WEEK	COMPOS
	PERMIT REQUIREMENT	175 DAILY AV	******	(26) LBS/DY	******	3 DAILY AV	7 DAILY MX	(19) MG/L		5TIMES /WEEK	COMPOS
FLOW, IN CONDUIT OR THRU TREATMENT PLANT 50050 P 0 0 SEE COMMENTS BELOW	SAMPLE MEASUREMENT	******	18775		******	******	******		0	CONTIN UOUS	TOTALZ
	PERMIT REQUIREMENT	******	25678 2HR PEAK	(78) GPM	******	******	******	**** ****		CONTIN UOUS	TOTALZ
FLOW, IN CONDUIT OR THRU TREATMENT PLANT 50050 Y 0 0 ANNUAL AVERAGE	SAMPLE MEASUREMENT	5.120	******		******	******	******		0	CONTIN UOUS	TOTALZ
	PERMIT REQUIREMENT	7.0 ANNL AVG	******	(03) MGD	******	******	******	**** ****		CONTIN UOUS	TOTALZ
FLOW, IN CONDUIT OR THRU TREATMENT PLANT 50050 1 0 0 EFFLUENT GROSS VALUE	SAMPLE MEASUREMENT	5.178	5.651		******	******	******		0	CONTIN UOUS	TOTALZ
	PERMIT REQUIREMENT	REPORT DAILY AV	REPORT DAILY MX	(03) MGD	******	******	******	**** ****		CONTIN UOUS	TOTALZ

NAME/TITLE PRINCIPAL EXECUTIVE OFFICER

JUN CHANG
DEPUTY DIRECTOR

TYPED OR PRINTED

I certify under penalty of law that this document and all attachments were prepared under my direction or supervision in accordance with a system designed to assure that qualified personnel properly gather and evaluate the information submitted. Based on my inquiry of the person or persons who manage the system, or those persons directly responsible for gathering the information, the information submitted is, to the best of my knowledge and belief, true, accurate and complete. I am aware that there are significant penalties for submitting false information, including the possibility of fine and imprisonment for knowing violations. See 18 U.S.C. § 1001 and 33 USC § 1319. (Penalties under these statutes may include fines up to $10,000 and or maximum imprisonment of between 6 months and 5 years.)

SIGNATURE OF PRINCIPAL EXECUTIVE OFFICER OR AUTHORIZED AGENT

TELEPHONE AREA	TELEPHONE NUMBER	DATE YEAR	DATE MO	DATE DAY
281	575-2824	09	10	07

COMMENT AND EXPLANATIONS OF ANY VIOLATIONS (Reference all attachments here)

PERMITTEE NAME/ADDRESS (Include Facility Name/Location if different)

NATIONAL POLLUTANT DISCHARGE ELIMINATION SYSTEM (NPDES)
DISCHARGE MONITORING REPORT (DMR)

NAME: CITY OF HOUSTON
ADDRESS: KINGWOOD CENTRAL PLANT
4545 GROVEWAY
HOUSTON TX 77087-1122
FACILITY:
LOCATION:

PERMIT NUMBER: TX0066583
DISCHARGE NUMBER: 001 B

MAJOR
M - INTERIM II
TOTAL FACILITY DISCHARGE

☐ Check here if No Discharge

MONITORING PERIOD

	YEAR	MO	DAY		YEAR	MO	DAY
FROM	09	01	01	TO	09	01	31

NOTE: Read instructions before completing this form.

PARAMETER		QUANTITY OR LOADING			QUALITY OR CONCENTRATION				NO. EX	FREQUENCY OF ANALYSIS	SAMPLE TYPE
		AVERAGE	MAXIMUM	UNITS	MINIMUM	AVERAGE	MAXIMUM	UNITS			
COLIFORM, FECAL GENERAL 74055 1 0 0 EFFLUENT GROSS VALUE	SAMPLE MEASUREMENT	******	******		******	14	14		0	DAILY	GRAB
	PERMIT REQUIREMENT	******	******	**** ****	******	200 DA GEOAV	400 7 DA GEO	(13) #/100ML		DAILY	GRAB
BOD, CARBONACEOUS 05 DAY, 20C 80082 1 0 0 EFFLUENT GROSS VALUE	SAMPLE MEASUREMENT	84	******		******	2	6		0	5TIMES /WEEK	COMPOS
	PERMIT REQUIREMENT	292 DAILY AV	******	(26) LBS/DY	******	5 DAILY AV	20 DAILY MX	(19) MG/L		5TIMES /WEEK	COMPOS
	SAMPLE MEASUREMENT										
	PERMIT REQUIREMENT										
	SAMPLE MEASUREMENT										
	PERMIT REQUIREMENT										
	SAMPLE MEASUREMENT										
	PERMIT REQUIREMENT										
	SAMPLE MEASUREMENT										
	PERMIT REQUIREMENT										
	SAMPLE MEASUREMENT										
	PERMIT REQUIREMENT										

NAME/TITLE PRINCIPAL EXECUTIVE OFFICER
JUN CHANG
DEPUTY DIRECTOR
TYPED OR PRINTED

I certify under penalty of law that this document and all attachments were prepared under my direction or supervision in accordance with a system designed to assure that qualified personnel properly gather and evaluate the information submitted. Based on my inquiry of the person or persons who manage the system, or those persons directly responsible for gathering the information, the information submitted is, to the best of my knowledge and belief, true, accurate and complete. I am aware that there are significant penalties for submitting false information, including the possibility of fine and imprisonment for knowing violations. See 18 U.S.C. § 1001 and 33 USC § 1319. (Penalties under these statutes may include fines up to $10,000 and/or maximum imprisonment of between 6 months and 5 years.)

SIGNATURE OF PRINCIPAL EXECUTIVE OFFICER OR AUTHORIZED AGENT

TELEPHONE		DATE		
AREA	NUMBER	YEAR	MO	DAY
281	575-2824	09	10	07

COMMENT AND EXPLANATIONS OF ANY VIOLATIONS (Reference all attachments here)

PERMITTEE NAME/ADDRESS (Include Facility Name/Location if different)

NATIONAL POLLUTANT DISCHARGE ELIMINATION SYSTEM (NPDES)
DISCHARGE MONITORING REPORT (DMR)

NAME: CITY OF HOUSTON
ADDRESS: KINGWOOD CENTRAL PLANT
4545 GROVEWAY
HOUSTON TX 77087-1122
FACILITY
LOCATION

PERMIT NUMBER: TX0066583
DISCHARGE NUMBER: 001 B

MAJOR

M - INTERIM II
TOTAL FACILITY DISCHARGE

☐ Check here if No Discharge

MONITORING PERIOD	YEAR	MO	DAY		YEAR	MO	DAY
FROM	09	02	01	TO	09	02	28

NOTE: Read instructions before completing this form.

PARAMETER		QUANTITY OR LOADING AVERAGE	QUANTITY OR LOADING MAXIMUM	UNITS	QUALITY OR CONCENTRATION MINIMUM	QUALITY OR CONCENTRATION AVERAGE	QUALITY OR CONCENTRATION MAXIMUM	UNITS	NO. EX	FREQUENCY OF ANALYSIS	SAMPLE TYPE
OXYGEN, DISSOLVED (DO) 00300 1 0 0 EFFLUENT GROSS VALUE	SAMPLE MEASUREMENT	******	******		7.0	******	******		0	5TIMES /WEEK	GRAB
	PERMIT REQUIREMENT	******	******	**** ****	6.0 MO MIN	******	******	(19) MG/L		5TIMES /WEEK	GRAB
PH 00400 1 0 0 EFFLUENT GROSS VALUE	SAMPLE MEASUREMENT	******	******		7.0	******	7.2		0	5TIMES /WEEK	GRAB
	PERMIT REQUIREMENT	******	******	**** ****	6.0 MINIMUM	******	9.0 MAXIMUM	(12) SU		5TIMES /WEEK	GRAB
SOLIDS, TOTAL SUSPENDED 00530 1 0 0 EFFLUENT GROSS VALUE	SAMPLE MEASUREMENT	107	******		******	2	7		0	5TIMES /WEEK	COMPOS
	PERMIT REQUIREMENT	584 DAILY AV	******	(26) LBS/DY	******	10 DAILY AV	40 DAILY MX	(19) MG/L		5TIMES /WEEK	COMPOS
NITROGEN, AMMONIA TOTAL (AS N) 00610 1 0 0 EFFLUENT GROSS VALUE	SAMPLE MEASUREMENT	5.1	******		******	0.1	0.3		0	5TIMES /WEEK	COMPOS
	PERMIT REQUIREMENT	175 DAILY AV	******	(26) LBS/DY	******	3 DAILY AV	7 DAILY MX	(19) MG/L		5TIMES /WEEK	COMPOS
FLOW, IN CONDUIT OR THRU TREATMENT PLANT 50050 P 0 0 SEE COMMENTS BELOW	SAMPLE MEASUREMENT	******	8583		******	******	******		0	CONTIN UOUS	TOTALZ
	PERMIT REQUIREMENT	******	25678 2HR PEAK	(78) GPM	******	******	******	**** ****		CONTIN UOUS	TOTALZ
FLOW, IN CONDUIT OR THRU TREATMENT PLANT 50050 Y 0 0 ANNUAL AVERAGE	SAMPLE MEASUREMENT	5.134	******		******	******	******		0	CONTIN UOUS	TOTALZ
	PERMIT REQUIREMENT	7.0 ANNL AVG	******	(03) MGD	******	******	******	**** ****		CONTIN UOUS	TOTALZ
FLOW, IN CONDUIT OR THRU TREATMENT PLANT 50050 1 0 0 EFFLUENT GROSS VALUE	SAMPLE MEASUREMENT	5.249	5.955		******	******	******		0	CONTIN UOUS	TOTALZ
	PERMIT REQUIREMENT	REPORT DAILY AV	REPORT DAILY MX	(03) MGD	******	******	******	**** ****		CONTIN UOUS	TOTALZ

NAME/TITLE PRINCIPAL EXECUTIVE OFFICER

JUN CHANG
DEPUTY DIRECTOR

TYPED OR PRINTED

I certify under penalty of law that this document and all attachments were prepared under my direction or supervision in accordance with a system designed to assure that qualified personnel properly gather and evaluate the information submitted. Based on my inquiry of the person or persons who manage the system, or those persons directly responsible for gathering the information, the information submitted is, to the best of my knowledge and belief, true, accurate and complete. I am aware that there are significant penalties for submitting false information, including the possibility of fine and imprisonment for knowing violations. See 18 U.S.C. § 1001 and 33 USC § 1319. (Penalties under these statutes may include fines up to $10,000 and/or imprisonment of between 6 months and 5 years.)

SIGNATURE OF PRINCIPAL EXECUTIVE OFFICER OR AUTHORIZED AGENT

TELEPHONE AREA	TELEPHONE NUMBER	DATE YEAR	DATE MO	DATE DAY
281	575-2824	09	10	07

COMMENT AND EXPLANATIONS OF ANY VIOLATIONS (Reference all attachments here)

PERMITTEE NAME/ADDRESS (Include Facility Name/Location if different)

NATIONAL POLLUTANT DISCHARGE ELIMINATION SYSTEM (NPDES)
DISCHARGE MONITORING REPORT (DMR)

NAME: CITY OF HOUSTON
ADDRESS: KINGWOOD CENTRAL PLANT
4545 GROVEWAY
HOUSTON TX 77087-1122
FACILITY
LOCATION

PERMIT NUMBER: TX0066583
DISCHARGE NUMBER: 001 B

MAJOR
M - INTERIM II
TOTAL FACILITY DISCHARGE

☐ Check here if No Discharge

MONITORING PERIOD	YEAR	MO	DAY		YEAR	MO	DAY
FROM	09	02	01	TO	09	02	28

NOTE: Read instructions before completing this form.

PARAMETER		QUANTITY OR LOADING			QUALITY OR CONCENTRATION				NO. EX	FREQUENCY OF ANALYSIS	SAMPLE TYPE
		AVERAGE	MAXIMUM	UNITS	MINIMUM	AVERAGE	MAXIMUM	UNITS			
COLIFORM, FECAL GENERAL 74055 1 0 0 EFFLUENT GROSS VALUE	SAMPLE MEASUREMENT	******	******		******	15	20		0	DAILY	GRAB
	PERMIT REQUIREMENT	******	******	**** ****	******	200 DA GEOAV	400 7 DA GEO	(13) #/100ML		DAILY	GRAB
BOD, CARBONACEOUS 05 DAY, 20C 80082 1 0 0 EFFLUENT GROSS VALUE	SAMPLE MEASUREMENT	81	******		******	2	6		0	5TIMES /WEEK	COMPOS
	PERMIT REQUIREMENT	292 DAILY AV	******	(26) LBS/DY	******	5 DAILY AV	20 DAILY MX	(19) MG/L		5TIMES /WEEK	COMPOS
	SAMPLE MEASUREMENT										
	PERMIT REQUIREMENT										
	SAMPLE MEASUREMENT										
	PERMIT REQUIREMENT										
	SAMPLE MEASUREMENT										
	PERMIT REQUIREMENT										
	SAMPLE MEASUREMENT										
	PERMIT REQUIREMENT										
	SAMPLE MEASUREMENT										
	PERMIT REQUIREMENT										

NAME/TITLE PRINCIPAL EXECUTIVE OFFICER

JUN CHANG
DEPUTY DIRECTOR

TYPED OR PRINTED

I certify under penalty of law that this document and all attachments were prepared under my direction or supervision in accordance with a system designed to assure that qualified personnel properly gather and evaluate the information submitted. Based on my inquiry of the person or persons who manage the system, or those persons directly responsible for gathering the information, the information submitted is, to the best of my knowledge and belief, true, accurate and complete. I am aware that there are significant penalties for submitting false information, including the possibility of fine and imprisonment for knowing violations. See 18 U.S.C. § 1001 and 33 USC § 1319. (Penalties under these statutes may include fines up to $10,000 and/or minimum imprisonment of between 3 months and 5 years.)

SIGNATURE OF PRINCIPAL EXECUTIVE OFFICER OR AUTHORIZED AGENT

TELEPHONE		DATE		
281	575-2824	09	10	07
AREA	NUMBER	YEAR	MO	DAY

COMMENT AND EXPLANATIONS OF ANY VIOLATIONS (Reference all attachments here)

PERMITTEE NAME/ADDRESS (Include Facility Name/Location if different)

NATIONAL POLLUTANT DISCHARGE ELIMINATION SYSTEM (NPDES)
DISCHARGE MONITORING REPORT (DMR)

NAME: CITY OF HOUSTON
ADDRESS: KINGWOOD CENTRAL PLANT
4545 GROVEWAY
HOUSTON TX 77087-1122
FACILITY
LOCATION

PERMIT NUMBER: TX0066583
DISCHARGE NUMBER: 001 B

MAJOR
M - INTERIM II
TOTAL FACILITY DISCHARGE

☐ Check here if No Discharge

MONITORING PERIOD						
FROM YEAR	MO	DAY	TO YEAR	MO	DAY
09	03	01	09	03	31

NOTE: Read instructions before completing this form.

PARAMETER		QUANTITY OR LOADING AVERAGE	QUANTITY OR LOADING MAXIMUM	QUANTITY OR LOADING UNITS	QUALITY OR CONCENTRATION MINIMUM	QUALITY OR CONCENTRATION AVERAGE	QUALITY OR CONCENTRATION MAXIMUM	QUALITY OR CONCENTRATION UNITS	NO. EX	FREQUENCY OF ANALYSIS	SAMPLE TYPE
OXYGEN, DISSOLVED (DO) 00300 1 0 0 EFFLUENT GROSS VALUE	SAMPLE MEASUREMENT	******	******		7.0	******	******		0	5TIMES /WEEK	GRAB
	PERMIT REQUIREMENT	******	******	**** ****	6.0 MO MIN	******	******	(19) MG/L		5TIMES /WEEK	GRAB
PH 00400 1 0 0 EFFLUENT GROSS VALUE	SAMPLE MEASUREMENT	******	******		7.0	******	7.9		0	5TIMES /WEEK	GRAB
	PERMIT REQUIREMENT	******	******	**** ****	6.0 MINIMUM	******	9.0 MAXIMUM	(12) SU		5TIMES /WEEK	GRAB
SOLIDS, TOTAL SUSPENDED 00530 1 0 0 EFFLUENT GROSS VALUE	SAMPLE MEASUREMENT	123	******		******	3	12		0	5TIMES /WEEK	COMPOS
	PERMIT REQUIREMENT	584 DAILY AV	******	(26) LBS/DY	******	10 DAILY AV	40 DAILY MX	(19) MG/L		5TIMES /WEEK	COMPOS
NITROGEN, AMMONIA TOTAL (AS N) 00610 1 0 0 EFFLUENT GROSS VALUE	SAMPLE MEASUREMENT	29.9	******		******	0.7	4.9		0	5TIMES /WEEK	COMPOS
	PERMIT REQUIREMENT	175 DAILY AV	******	(26) LBS/DY	******	3 DAILY AV	7 DAILY MX	(19) MG/L		5TIMES /WEEK	COMPOS
FLOW, IN CONDUIT OR THRU TREATMENT PLANT 50050 P 0 0 SEE COMMENTS BELOW	SAMPLE MEASUREMENT	******	8125		******	******	******		0	CONTIN UOUS	TOTALZ
	PERMIT REQUIREMENT	******	25678 2HR PEAK	(78) GPM	******	******	******	**** ****		CONTIN UOUS	TOTALZ
FLOW, IN CONDUIT OR THRU TREATMENT PLANT 50050 Y 0 0 ANNUAL AVERAGE	SAMPLE MEASUREMENT	5.159	******		******	******	******		0	CONTIN UOUS	TOTALZ
	PERMIT REQUIREMENT	7.0 ANNL AVG	******	(03) MGD	******	******	******	**** ****		CONTIN UOUS	TOTALZ
FLOW, IN CONDUIT OR THRU TREATMENT PLANT 50050 1 0 0 EFFLUENT GROSS VALUE	SAMPLE MEASUREMENT	5.266	6.351		******	******	******		0	CONTIN UOUS	TOTALZ
	PERMIT REQUIREMENT	REPORT DAILY AV	REPORT DAILY MX	(03) MGD	******	******	******	**** ****		CONTIN UOUS	TOTALZ

NAME/TITLE PRINCIPAL EXECUTIVE OFFICER

JUN CHANG
DEPUTY DIRECTOR

TYPED OR PRINTED

I certify under penalty of law that this document and all attachments were prepared under my direction or supervision in accordance with a system designed to assure that qualified personnel properly gather and evaluate the information submitted. Based on my inquiry of the person or persons who manage the system, or those persons directly responsible for gathering the information, the information submitted is, to the best of my knowledge and belief, true, accurate and complete. I am aware that there are significant penalties for submitting false information, including the possibility of fine and imprisonment for knowing violations. See 18 U.S.C. § 1001 and 33 USC § 1319. (Penalties under these statutes may include fines up to $10,000 and/or maximum imprisonment of between 6 months and 5 years.)

SIGNATURE OF PRINCIPAL EXECUTIVE OFFICER OR AUTHORIZED AGENT

TELEPHONE AREA	TELEPHONE NUMBER	DATE YEAR	DATE MO	DATE DAY
281	575-2824	09	10	07

COMMENT AND EXPLANATIONS OF ANY VIOLATIONS (Reference all attachments here)

PERMITTEE NAME/ADDRESS (Include Facility Name/Location if different)

NATIONAL POLLUTANT DISCHARGE ELIMINATION SYSTEM (NPDES)
DISCHARGE MONITORING REPORT (DMR)

NAME: CITY OF HOUSTON
ADDRESS: KINGWOOD CENTRAL PLANT
4545 GROVEWAY
HOUSTON TX 77087-1122
FACILITY
LOCATION

PERMIT NUMBER: TX0066583
DISCHARGE NUMBER: 001 B

MAJOR
M - INTERIM II
TOTAL FACILITY DISCHARGE

☐ Check here if No Discharge

MONITORING PERIOD	YEAR	MO	DAY		YEAR	MO	DAY
FROM	09	03	01	TO	09	03	31

NOTE: Read instructions before completing this form.

PARAMETER		QUANTITY OR LOADING AVERAGE	QUANTITY OR LOADING MAXIMUM	QUANTITY OR LOADING UNITS	QUALITY OR CONCENTRATION MINIMUM	QUALITY OR CONCENTRATION AVERAGE	QUALITY OR CONCENTRATION MAXIMUM	QUALITY OR CONCENTRATION UNITS	NO. EX	FREQUENCY OF ANALYSIS	SAMPLE TYPE
COLIFORM, FECAL GENERAL 74055 1 0 0 EFFLUENT GROSS VALUE	SAMPLE MEASUREMENT	******	******		******	14	14		0	DAILY	GRAB
	PERMIT REQUIREMENT	******	******	**** ****	******	200 DA GEOAV	400 7 DA GEO	(13) #/100ML		DAILY	GRAB
BOD, CARBONACEOUS 05 DAY, 20C 80082 1 0 0 EFFLUENT GROSS VALUE	SAMPLE MEASUREMENT	82	******		******	2	5		0	5TIMES /WEEK	COMPOS
	PERMIT REQUIREMENT	292 DAILY AV	******	(26) LBS/DY	******	5 DAILY AV	20 DAILY MX	(19) MG/L		5TIMES /WEEK	COMPOS
	SAMPLE MEASUREMENT										
	PERMIT REQUIREMENT										
	SAMPLE MEASUREMENT										
	PERMIT REQUIREMENT										
	SAMPLE MEASUREMENT										
	PERMIT REQUIREMENT										
	SAMPLE MEASUREMENT										
	PERMIT REQUIREMENT										
	SAMPLE MEASUREMENT										
	PERMIT REQUIREMENT										

NAME/TITLE PRINCIPAL EXECUTIVE OFFICER

JUN CHANG
DEPUTY DIRECTOR

TYPED OR PRINTED

I certify under penalty of law that this document and all attachments were prepared under my direction or supervision in accordance with a system designed to assure that qualified personnel properly gather and evaluate the information submitted. Based on my inquiry of the person or persons who manage the system, or those persons directly responsible for gathering the information, the information submitted is, to the best of my knowledge and belief, true, accurate and complete. I am aware that there are significant penalties for submitting false information, including the possibility of fine and imprisonment for knowing violations. See 18 U.S.C. § 1001 and 33 USC § 1319. (Penalties under these statutes may include fines up to $10,000 and or maximum imprisonment of between 6 months and 5 years.)

SIGNATURE OF PRINCIPAL EXECUTIVE OFFICER OR AUTHORIZED AGENT

TELEPHONE AREA	TELEPHONE NUMBER	DATE YEAR	DATE MO	DATE DAY
281	575-2824	09	10	07

COMMENT AND EXPLANATIONS OF ANY VIOLATIONS (Reference all attachments here)

PERMITTEE NAME/ADDRESS (Include Facility Name/Location if different)

NATIONAL POLLUTANT DISCHARGE ELIMINATION SYSTEM (NPDES)
DISCHARGE MONITORING REPORT (DMR)

NAME: CITY OF HOUSTON
ADDRESS: KINGWOOD CENTRAL PLANT
4545 GROVEWAY
HOUSTON TX 77087-1122
FACILITY
LOCATION

PERMIT NUMBER: TX0066583
DISCHARGE NUMBER: 001 B

MAJOR
M - INTERIM II
TOTAL FACILITY DISCHARGE

☐ Check here if No Discharge

MONITORING PERIOD

	YEAR	MO	DAY		YEAR	MO	DAY
FROM	09	04	01	TO	09	04	30

NOTE: Read instructions before completing this form.

PARAMETER		QUANTITY OR LOADING			QUALITY OR CONCENTRATION				NO. EX	FREQUENCY OF ANALYSIS	SAMPLE TYPE
		AVERAGE	MAXIMUM	UNITS	MINIMUM	AVERAGE	MAXIMUM	UNITS			
OXYGEN, DISSOLVED (DO) 00300 1 0 0 EFFLUENT GROSS VALUE	SAMPLE MEASUREMENT	******	******		6.8	******	******		0	5TIMES /WEEK	GRAB
	PERMIT REQUIREMENT	******	******	**** ****	6.0 MO MIN	******	******	(19) MG/L		5TIMES /WEEK	GRAB
PH 00400 1 0 0 EFFLUENT GROSS VALUE	SAMPLE MEASUREMENT	******	******		6.9	******	7.5		0	5TIMES /WEEK	GRAB
	PERMIT REQUIREMENT	******	******	**** ****	6.0 MINIMUM	******	9.0 MAXIMUM	(12) SU		5TIMES /WEEK	GRAB
SOLIDS, TOTAL SUSPENDED 00530 1 0 0 EFFLUENT GROSS VALUE	SAMPLE MEASUREMENT	93	******		******	2	3		0	5TIMES /WEEK	COMPOS
	PERMIT REQUIREMENT	584 DAILY AV	******	(26) LBS/DY	******	10 DAILY AV	40 DAILY MX	(19) MG/L		5TIMES /WEEK	COMPOS
NITROGEN, AMMONIA TOTAL (AS N) 00610 1 0 0 EFFLUENT GROSS VALUE	SAMPLE MEASUREMENT	9.1	******		******	0.2	0.9		0	5TIMES /WEEK	COMPOS
	PERMIT REQUIREMENT	175 DAILY AV	******	(26) LBS/DY	******	3 DAILY AV	7 DAILY MX	(19) MG/L		5TIMES /WEEK	COMPOS
FLOW, IN CONDUIT OR THRU TREATMENT PLANT 50050 P 0 0 SEE COMMENTS BELOW	SAMPLE MEASUREMENT	******	14467		******	******	******		0	CONTIN UOUS	TOTALZ
	PERMIT REQUIREMENT	******	25678 2HR PEAK	(78) GPM	******	******	******	**** ****		CONTIN UOUS	TOTALZ
FLOW, IN CONDUIT OR THRU TREATMENT PLANT 50050 Y 0 0 ANNUAL AVERAGE	SAMPLE MEASUREMENT	5.200	******		******	******	******		0	CONTIN UOUS	TOTALZ
	PERMIT REQUIREMENT	7.0 ANNL AVG	******	(03) MGD	******	******	******	**** ****		CONTIN UOUS	TOTALZ
FLOW, IN CONDUIT OR THRU TREATMENT PLANT 50050 1 0 0 EFFLUENT GROSS VALUE	SAMPLE MEASUREMENT	5.433	10.061		******	******	******		0	CONTIN UOUS	TOTALZ
	PERMIT REQUIREMENT	REPORT DAILY AV	REPORT DAILY MX	(03) MGD	******	******	******	**** ****		CONTIN UOUS	TOTALZ

NAME/TITLE PRINCIPAL EXECUTIVE OFFICER

JUN CHANG
DEPUTY DIRECTOR

TYPED OR PRINTED

I certify under penalty of law that this document and all attachments were prepared under my direction or supervision in accordance with a system designed to assure that qualified personnel properly gather and evaluate the information submitted. Based on my inquiry of the person or persons who manage the system, or those persons directly responsible for gathering the information, the information submitted is, to the best of my knowledge and belief, true, accurate and complete. I am aware that there are significant penalties for submitting false information, including the possibility of fine and imprisonment for knowing violations. See 18 U.S.C. § 1001 and 33 USC § 1319. (Penalties under these statutes may include fines up to $10,000 and or minimum imprisonment of between 6 months and 5 years.)

SIGNATURE OF PRINCIPAL EXECUTIVE OFFICER OR AUTHORIZED AGENT

TELEPHONE		DATE		
281	575-2824	09	10	07
AREA	NUMBER	YEAR	MO	DAY

COMMENT AND EXPLANATIONS OF ANY VIOLATIONS (Reference all attachments here)

PERMITTEE NAME/ADDRESS (Include Facility Name/Location if different)

NATIONAL POLLUTANT DISCHARGE ELIMINATION SYSTEM (NPDES)
DISCHARGE MONITORING REPORT (DMR)

NAME: CITY OF HOUSTON
ADDRESS: KINGWOOD CENTRAL PLANT
4545 GROVEWAY
HOUSTON TX 77087-1122
FACILITY:
LOCATION:

PERMIT NUMBER: TX0066583
DISCHARGE NUMBER: 001 B

MAJOR
M - INTERIM II
TOTAL FACILITY DISCHARGE

☐ Check here if No Discharge

MONITORING PERIOD	YEAR	MO	DAY		YEAR	MO	DAY
FROM	09	04	01	TO	09	04	30

NOTE: Read instructions before completing this form.

PARAMETER		QUANTITY OR LOADING AVERAGE	QUANTITY OR LOADING MAXIMUM	QUANTITY OR LOADING UNITS	QUALITY OR CONCENTRATION MINIMUM	QUALITY OR CONCENTRATION AVERAGE	QUALITY OR CONCENTRATION MAXIMUM	QUALITY OR CONCENTRATION UNITS	NO. EX	FREQUENCY OF ANALYSIS	SAMPLE TYPE
COLIFORM, FECAL GENERAL 74055 1 0 0 EFFLUENT GROSS VALUE	SAMPLE MEASUREMENT	******	******		******	14	14		0	DAILY	GRAB
	PERMIT REQUIREMENT	******	******	**** ****	******	200 DA GEOAV	400 7 DA GEO	(13) #/100ML		DAILY	GRAB
BOD, CARBONACEOUS 05 DAY, 20C 80082 1 0 0 EFFLUENT GROSS VALUE	SAMPLE MEASUREMENT	109	******		******	3	5		0	5TIMES /WEEK	COMPOS
	PERMIT REQUIREMENT	292 DAILY AV	******	(26) LBS/DY	******	5 DAILY AV	20 DAILY MX	(19) MG/L		5TIMES /WEEK	COMPOS
	SAMPLE MEASUREMENT										
	PERMIT REQUIREMENT										
	SAMPLE MEASUREMENT										
	PERMIT REQUIREMENT										
	SAMPLE MEASUREMENT										
	PERMIT REQUIREMENT										
	SAMPLE MEASUREMENT										
	PERMIT REQUIREMENT										
	SAMPLE MEASUREMENT										
	PERMIT REQUIREMENT										

NAME/TITLE PRINCIPAL EXECUTIVE OFFICER
JUN CHANG
DEPUTY DIRECTOR
TYPED OR PRINTED

I certify under penalty of law that this document and all attachments were prepared under my direction or supervision in accordance with a system designed to assure that qualified personnel properly gather and evaluate the information submitted. Based on my inquiry of the person or persons who manage the system, or those persons directly responsible for gathering the information, the information submitted is, to the best of my knowledge and belief, true, accurate and complete. I am aware that there are significant penalties for submitting false information, including the possibility of fine and imprisonment for knowing violations. See 18 U.S.C. § 1001 and 33 USC § 1319. (Penalties under these statutes may include fines up to $10,000 and or maximum imprisonment of between 6 months and 5 years.)

SIGNATURE OF PRINCIPAL EXECUTIVE OFFICER OR AUTHORIZED AGENT

TELEPHONE AREA	TELEPHONE NUMBER	DATE YEAR	DATE MO	DATE DAY
281	575-2824	09	10	07

COMMENT AND EXPLANATIONS OF ANY VIOLATIONS (Reference all attachments here)

PERMITTEE NAME/ADDRESS (Include Facility Name/Location if different)

NATIONAL POLLUTANT DISCHARGE ELIMINATION SYSTEM (NPDES)
DISCHARGE MONITORING REPORT (DMR)

NAME: CITY OF HOUSTON
ADDRESS: KINGWOOD CENTRAL PLANT
4545 GROVEWAY
HOUSTON TX 77087-1122
FACILITY
LOCATION

PERMIT NUMBER: TX0066583
DISCHARGE NUMBER: 001 B

MAJOR
M - INTERIM II
TOTAL FACILITY DISCHARGE

☐ Check here if No Discharge

MONITORING PERIOD	YEAR	MO	DAY	TO	YEAR	MO	DAY
FROM	09	05	01		09	05	31

NOTE: Read instructions before completing this form.

PARAMETER		QUANTITY OR LOADING AVERAGE	QUANTITY OR LOADING MAXIMUM	QUANTITY OR LOADING UNITS	QUALITY OR CONCENTRATION MINIMUM	QUALITY OR CONCENTRATION AVERAGE	QUALITY OR CONCENTRATION MAXIMUM	QUALITY OR CONCENTRATION UNITS	NO. EX	FREQUENCY OF ANALYSIS	SAMPLE TYPE
OXYGEN, DISSOLVED (DO) 00300 1 0 0 EFFLUENT GROSS VALUE	SAMPLE MEASUREMENT	******	******		7.0	******	******		0	5TIMES /WEEK	GRAB
	PERMIT REQUIREMENT	******	******	**** ****	6.0 MO MIN	******	******	(19) MG/L		5TIMES /WEEK	GRAB
PH 00400 1 0 0 EFFLUENT GROSS VALUE	SAMPLE MEASUREMENT	******	******		6.8	******	8.1		0	5TIMES /WEEK	GRAB
	PERMIT REQUIREMENT	******	******	**** ****	6.0 MINIMUM	******	9.0 MAXIMUM	(12) SU		5TIMES /WEEK	GRAB
SOLIDS, TOTAL SUSPENDED 00530 1 0 0 EFFLUENT GROSS VALUE	SAMPLE MEASUREMENT	91	******		******	2	4		0	5TIMES /WEEK	COMPOS
	PERMIT REQUIREMENT	584 DAILY AV	******	(26) LBS/DY	******	10 DAILY AV	40 DAILY MX	(19) MG/L		5TIMES /WEEK	COMPOS
NITROGEN, AMMONIA TOTAL (AS N) 00610 1 0 0 EFFLUENT GROSS VALUE	SAMPLE MEASUREMENT	9.9	******		******	0.2	1.2		0	5TIMES /WEEK	COMPOS
	PERMIT REQUIREMENT	175 DAILY AV	******	(26) LBS/DY	******	3 DAILY AV	7 DAILY MX	(19) MG/L		5TIMES /WEEK	COMPOS
FLOW, IN CONDUIT OR THRU TREATMENT PLANT 50050 P 0 0 SEE COMMENTS BELOW	SAMPLE MEASUREMENT	******	6633		******	******	******		0	CONTIN UOUS	TOTALZ
	PERMIT REQUIREMENT	******	25678 2HR PEAK	(78) GPM	******	******	******	**** ****		CONTIN UOUS	TOTALZ
FLOW, IN CONDUIT OR THRU TREATMENT PLANT 50050 Y 0 0 ANNUAL AVERAGE	SAMPLE MEASUREMENT	5.183	******		******	******	******		0	CONTIN UOUS	TOTALZ
	PERMIT REQUIREMENT	7.0 ANNL AVG	******	(03) MGD	******	******	******	**** ****		CONTIN UOUS	TOTALZ
FLOW, IN CONDUIT OR THRU TREATMENT PLANT 50050 1 0 0 EFFLUENT GROSS VALUE	SAMPLE MEASUREMENT	5.109	5.545		******	******	******		0	CONTIN UOUS	TOTALZ
	PERMIT REQUIREMENT	REPORT DAILY AV	REPORT DAILY MX	(03) MGD	******	******	******	**** ****		CONTIN UOUS	TOTALZ

NAME/TITLE PRINCIPAL EXECUTIVE OFFICER

JUN CHANG
DEPUTY DIRECTOR

TYPED OR PRINTED

I certify under penalty of law that this document and all attachments were prepared under my direction or supervision in accordance with a system designed to assure that qualified personnel properly gather and evaluate the information submitted. Based on my inquiry of the person or persons who manage the system, or those persons directly responsible for gathering the information, the information submitted is, to the best of my knowledge and belief, true, accurate and complete. I am aware that there are significant penalties for submitting false information, including the possibility of fine and imprisonment for knowing violations. See 18 U.S.C. § 1001 and 33 USC § 1319. (Penalties under these statutes may include fines up to $10,000 and or imprisonment of between 6 months and 5 years.)

SIGNATURE OF PRINCIPAL EXECUTIVE OFFICER OR AUTHORIZED AGENT

TELEPHONE AREA	TELEPHONE NUMBER	DATE YEAR	DATE MO	DATE DAY
281	575-2824	09	10	07

COMMENT AND EXPLANATIONS OF ANY VIOLATIONS (Reference all attachments here)

PERMITTEE NAME/ADDRESS (Include Facility Name/Location if different)

NATIONAL POLLUTANT DISCHARGE ELIMINATION SYSTEM (NPDES)
DISCHARGE MONITORING REPORT (DMR)

NAME: CITY OF HOUSTON
ADDRESS: KINGWOOD CENTRAL PLANT
4545 GROVEWAY
HOUSTON TX 77087-1122
FACILITY
LOCATION

PERMIT NUMBER: TX0066583
DISCHARGE NUMBER: 001 B

MAJOR
M - INTERIM II
TOTAL FACILITY DISCHARGE

☐ Check here if No Discharge

MONITORING PERIOD	YEAR	MO	DAY		YEAR	MO	DAY
FROM	09	05	01	TO	09	05	31

NOTE: Read instructions before completing this form.

PARAMETER		QUANTITY OR LOADING AVERAGE	QUANTITY OR LOADING MAXIMUM	QUANTITY OR LOADING UNITS	QUALITY OR CONCENTRATION MINIMUM	QUALITY OR CONCENTRATION AVERAGE	QUALITY OR CONCENTRATION MAXIMUM	QUALITY OR CONCENTRATION UNITS	NO. EX	FREQUENCY OF ANALYSIS	SAMPLE TYPE
COLIFORM, FECAL GENERAL 74055 1 0 0 EFFLUENT GROSS VALUE	SAMPLE MEASUREMENT	******	******		******	15	16		0	DAILY	GRAB
	PERMIT REQUIREMENT	******	******	**** ****	******	200 DA GEOAV	400 7 DA GEO	(13) #/100ML		DAILY	GRAB
BOD, CARBONACEOUS 05 DAY, 20C 80082 1 0 0 EFFLUENT GROSS VALUE	SAMPLE MEASUREMENT	99	******		******	2	5		0	5TIMES /WEEK	COMPOS
	PERMIT REQUIREMENT	292 DAILY AV	******	(26) LBS/DY	******	5 DAILY AV	20 DAILY MX	(19) MG/L		5TIMES /WEEK	COMPOS
	SAMPLE MEASUREMENT										
	PERMIT REQUIREMENT										
	SAMPLE MEASUREMENT										
	PERMIT REQUIREMENT										
	SAMPLE MEASUREMENT										
	PERMIT REQUIREMENT										
	SAMPLE MEASUREMENT										
	PERMIT REQUIREMENT										
	SAMPLE MEASUREMENT										
	PERMIT REQUIREMENT										

NAME/TITLE PRINCIPAL EXECUTIVE OFFICER

JUN CHANG
DEPUTY DIRECTOR

TYPED OR PRINTED

I certify under penalty of law that this document and all attachments were prepared under my direction or supervision in accordance with a system designed to assure that qualified personnel properly gather and evaluate the information submitted. Based on my inquiry of the person or persons who manage the system, or those persons directly responsible for gathering the information, the information submitted is, to the best of my knowledge and belief, true, accurate and complete. I am aware that there are significant penalties for submitting false information, including the possibility of fine and imprisonment for knowing violations. See 18 U.S.C. § 1001 and 33 USC § 1319. (Penalties under these statutes may include fines up to $10,000 and/or maximum imprisonment of between 6 months and 5 years.)

SIGNATURE OF PRINCIPAL EXECUTIVE OFFICER OR AUTHORIZED AGENT

TELEPHONE AREA	TELEPHONE NUMBER	DATE YEAR	DATE MO	DATE DAY
281	575-2824	09	10	07

COMMENT AND EXPLANATIONS OF ANY VIOLATIONS (Reference all attachments here)

PERMITTEE NAME/ADDRESS (Include Facility Name/Location if different)

NATIONAL POLLUTANT DISCHARGE ELIMINATION SYSTEM (NPDES)
DISCHARGE MONITORING REPORT (DMR)

NAME: CITY OF HOUSTON
ADDRESS: KINGWOOD CENTRAL PLANT
4545 GROVEWAY
HOUSTON TX 77087-1122
FACILITY:
LOCATION:

PERMIT NUMBER: TX0066583
DISCHARGE NUMBER: 001 B

MAJOR
M - INTERIM II
TOTAL FACILITY DISCHARGE

☐ Check here if No Discharge

MONITORING PERIOD	YEAR	MO	DAY		YEAR	MO	DAY
FROM	09	06	01	TO	09	06	30

NOTE: Read instructions before completing this form.

PARAMETER		QUANTITY OR LOADING AVERAGE	QUANTITY OR LOADING MAXIMUM	QUANTITY OR LOADING UNITS	QUALITY OR CONCENTRATION MINIMUM	QUALITY OR CONCENTRATION AVERAGE	QUALITY OR CONCENTRATION MAXIMUM	QUALITY OR CONCENTRATION UNITS	NO. EX	FREQUENCY OF ANALYSIS	SAMPLE TYPE
OXYGEN, DISSOLVED (DO) 00300 1 0 0 EFFLUENT GROSS VALUE	SAMPLE MEASUREMENT	******	******		6.7	******	******		0	5TIMES /WEEK	GRAB
	PERMIT REQUIREMENT	******	******	**** ****	6.0 MO MIN	******	******	(19) MG/L		5TIMES /WEEK	GRAB
PH 00400 1 0 0 EFFLUENT GROSS VALUE	SAMPLE MEASUREMENT	******	******		6.3	******	7.6		0	5TIMES /WEEK	GRAB
	PERMIT REQUIREMENT	******	******	**** ****	6.0 MINIMUM	******	9.0 MAXIMUM	(12) SU		5TIMES /WEEK	GRAB
SOLIDS, TOTAL SUSPENDED 00530 1 0 0 EFFLUENT GROSS VALUE	SAMPLE MEASUREMENT	121	******		******	3	9		0	5TIMES /WEEK	COMPOS
	PERMIT REQUIREMENT	584 DAILY AV	******	(26) LBS/DY	******	10 DAILY AV	40 DAILY MX	(19) MG/L		5TIMES /WEEK	COMPOS
NITROGEN, AMMONIA TOTAL (AS N) 00610 1 0 0 EFFLUENT GROSS VALUE	SAMPLE MEASUREMENT	7.5	******		******	0.2	0.9		0	5TIMES /WEEK	COMPOS
	PERMIT REQUIREMENT	175 DAILY AV	******	(26) LBS/DY	******	3 DAILY AV	7 DAILY MX	(19) MG/L		5TIMES /WEEK	COMPOS
FLOW, IN CONDUIT OR THRU TREATMENT PLANT 50050 P 0 0 SEE COMMENTS BELOW	SAMPLE MEASUREMENT	******	6658		******	******	******		0	CONTIN UOUS	TOTALZ
	PERMIT REQUIREMENT	******	25678 2HR PEAK	(78) GPM	******	******	******	**** ****		CONTIN UOUS	TOTALZ
FLOW, IN CONDUIT OR THRU TREATMENT PLANT 50050 Y 0 0 ANNUAL AVERAGE	SAMPLE MEASUREMENT	5.171	******		******	******	******		0	CONTIN UOUS	TOTALZ
	PERMIT REQUIREMENT	7.0 ANNL AVG	******	(03) MGD	******	******	******	**** ****		CONTIN UOUS	TOTALZ
FLOW, IN CONDUIT OR THRU TREATMENT PLANT 50050 1 0 0 EFFLUENT GROSS VALUE	SAMPLE MEASUREMENT	5.057	5.313		******	******	******		0	CONTIN UOUS	TOTALZ
	PERMIT REQUIREMENT	REPORT DAILY AV	REPORT DAILY MX	(03) MGD	******	******	******	**** ****		CONTIN UOUS	TOTALZ

NAME/TITLE PRINCIPAL EXECUTIVE OFFICER

JUN CHANG
DEPUTY DIRECTOR

TYPED OR PRINTED

I certify under penalty of law that this document and all attachments were prepared under my direction or supervision in accordance with a system designed to assure that qualified personnel properly gather and evaluate the information submitted. Based on my inquiry of the person or persons who manage the system, or those persons directly responsible for gathering the information, the information submitted is, to the best of my knowledge and belief, true, accurate and complete. I am aware that there are significant penalties for submitting false information, including the possibility of fine and imprisonment for knowing violations. See 18 U.S.C. § 1001 and 33 USC § 1319. (Penalties under these statutes may include fines up to $10,000 and/or maximum imprisonment of between 6 months and 5 years.)

SIGNATURE OF PRINCIPAL EXECUTIVE OFFICER OR AUTHORIZED AGENT

TELEPHONE AREA	TELEPHONE NUMBER	DATE YEAR	DATE MO	DATE DAY
281	575-2824	09	10	07

COMMENT AND EXPLANATIONS OF ANY VIOLATIONS (Reference all attachments here)

PERMITTEE NAME/ADDRESS (Include Facility Name/Location if different)

NATIONAL POLLUTANT DISCHARGE ELIMINATION SYSTEM (NPDES)
DISCHARGE MONITORING REPORT (DMR)

NAME: CITY OF HOUSTON
ADDRESS: KINGWOOD CENTRAL PLANT
4545 GROVEWAY
HOUSTON TX 77087-1122
FACILITY
LOCATION

PERMIT NUMBER: TX0066583
DISCHARGE NUMBER: 001 B

MAJOR
M - INTERIM II
TOTAL FACILITY DISCHARGE

☐ Check here if No Discharge

MONITORING PERIOD	YEAR	MO	DAY		YEAR	MO	DAY
FROM	09	06	01	TO	09	06	30

NOTE: Read instructions before completing this form.

PARAMETER		QUANTITY OR LOADING AVERAGE	QUANTITY OR LOADING MAXIMUM	QUANTITY OR LOADING UNITS	QUALITY OR CONCENTRATION MINIMUM	QUALITY OR CONCENTRATION AVERAGE	QUALITY OR CONCENTRATION MAXIMUM	QUALITY OR CONCENTRATION UNITS	NO. EX	FREQUENCY OF ANALYSIS	SAMPLE TYPE
COLIFORM, FECAL GENERAL 74055 1 0 0 EFFLUENT GROSS VALUE	SAMPLE MEASUREMENT	******	******		******	15	17		0	DAILY	GRAB
	PERMIT REQUIREMENT	******	******	**** ****	******	200 DA GEOAV	400 7 DA GEO	(13) #/100ML		DAILY	GRAB
BOD, CARBONACEOUS 05 DAY, 20C 80082 1 0 0 EFFLUENT GROSS VALUE	SAMPLE MEASUREMENT	99	******		******	2	9		0	5TIMES /WEEK	COMPOS
	PERMIT REQUIREMENT	292 DAILY AV	******	(26) LBS/DY	******	5 DAILY AV	20 DAILY MX	(19) MG/L		5TIMES /WEEK	COMPOS
	SAMPLE MEASUREMENT										
	PERMIT REQUIREMENT										
	SAMPLE MEASUREMENT										
	PERMIT REQUIREMENT										
	SAMPLE MEASUREMENT										
	PERMIT REQUIREMENT										
	SAMPLE MEASUREMENT										
	PERMIT REQUIREMENT										
	SAMPLE MEASUREMENT										
	PERMIT REQUIREMENT										

NAME/TITLE PRINCIPAL EXECUTIVE OFFICER

JUN CHANG
DEPUTY DIRECTOR

TYPED OR PRINTED

I certify under penalty of law that this document and all attachments were prepared under my direction or supervision in accordance with a system designed to assure that qualified personnel properly gather and evaluate the information submitted. Based on my inquiry of the person or persons who manage the system, or those persons directly responsible for gathering the information, the information submitted is, to the best of my knowledge and belief, true, accurate and complete. I am aware that there are significant penalties for submitting false information, including the possibility of fine and imprisonment for knowing violations. See 18 U.S.C. § 1001 and 33 USC § 1319. (Penalties under these statutes may include fines up to $10,000 and or minimum imprisonment of between 6 months and 5 years.)

SIGNATURE OF PRINCIPAL EXECUTIVE OFFICER OR AUTHORIZED AGENT

TELEPHONE AREA	TELEPHONE NUMBER	DATE YEAR	DATE MO	DATE DAY
281	575-2824	09	10	07

COMMENT AND EXPLANATIONS OF ANY VIOLATIONS (Reference all attachments here)

PERMITTEE NAME/ADDRESS (Include Facility Name/Location if different)

NATIONAL POLLUTANT DISCHARGE ELIMINATION SYSTEM (NPDES)
DISCHARGE MONITORING REPORT (DMR)

NAME: CITY OF HOUSTON
ADDRESS: KINGWOOD CENTRAL PLANT
4545 GROVEWAY
HOUSTON TX 77087-1122
FACILITY
LOCATION

PERMIT NUMBER: TX0066583
DISCHARGE NUMBER: 001 B

MAJOR
M - INTERIM II
TOTAL FACILITY DISCHARGE

☐ Check here if No Discharge

MONITORING PERIOD

FROM YEAR	MO	DAY	TO YEAR	MO	DAY
09	07	01	09	07	31

NOTE: Read instructions before completing this form.

PARAMETER		QUANTITY OR LOADING AVERAGE	MAXIMUM	UNITS	QUALITY OR CONCENTRATION MINIMUM	AVERAGE	MAXIMUM	UNITS	NO. EX	FREQUENCY OF ANALYSIS	SAMPLE TYPE
OXYGEN, DISSOLVED (DO) 00300 1 0 0 EFFLUENT GROSS VALUE	SAMPLE MEASUREMENT	******	******		6.8	******	******		0	5TIMES /WEEK	GRAB
	PERMIT REQUIREMENT	******	******	**** ****	6.0 MO MIN	******	******	(19) MG/L		5TIMES /WEEK	GRAB
PH 00400 1 0 0 EFFLUENT GROSS VALUE	SAMPLE MEASUREMENT	******	******		7.1	******	7.4		0	5TIMES /WEEK	GRAB
	PERMIT REQUIREMENT	******	******	**** ****	6.0 MINIMUM	******	9.0 MAXIMUM	(12) SU		5TIMES /WEEK	GRAB
SOLIDS, TOTAL SUSPENDED 00530 1 0 0 EFFLUENT GROSS VALUE	SAMPLE MEASUREMENT	117	******		******	3	7		0	5TIMES /WEEK	COMPOS
	PERMIT REQUIREMENT	584 DAILY AV	******	(26) LBS/DY	******	10 DAILY AV	40 DAILY MX	(19) MG/L		5TIMES /WEEK	COMPOS
NITROGEN, AMMONIA TOTAL (AS N) 00610 1 0 0 EFFLUENT GROSS VALUE	SAMPLE MEASUREMENT	9.5	******		******	0.2	0.8		0	5TIMES /WEEK	COMPOS
	PERMIT REQUIREMENT	175 DAILY AV	******	(26) LBS/DY	******	3 DAILY AV	7 DAILY MX	(19) MG/L		5TIMES /WEEK	COMPOS
FLOW, IN CONDUIT OR THRU TREATMENT PLANT 50050 P 0 0 SEE COMMENTS BELOW	SAMPLE MEASUREMENT	******	16408		******	******	******		0	CONTIN UOUS	TOTALZ
	PERMIT REQUIREMENT	******	25678 2HR PEAK	(78) GPM	******	******	******	**** ****		CONTIN UOUS	TOTALZ
FLOW, IN CONDUIT OR THRU TREATMENT PLANT 50050 Y 0 0 ANNUAL AVERAGE	SAMPLE MEASUREMENT	5.166	******		******	******	******		0	CONTIN UOUS	TOTALZ
	PERMIT REQUIREMENT	7.0 ANNL AVG	******	(03) MGD	******	******	******	**** ****		CONTIN UOUS	TOTALZ
FLOW, IN CONDUIT OR THRU TREATMENT PLANT 50050 1 0 0 EFFLUENT GROSS VALUE	SAMPLE MEASUREMENT	5.116	7.189		******	******	******		0	CONTIN UOUS	TOTALZ
	PERMIT REQUIREMENT	REPORT DAILY AV	REPORT DAILY MX	(03) MGD	******	******	******	**** ****		CONTIN UOUS	TOTALZ

NAME/TITLE PRINCIPAL EXECUTIVE OFFICER

JUN CHANG
DEPUTY DIRECTOR

TYPED OR PRINTED

I certify under penalty of law that this document and all attachments were prepared under my direction or supervision in accordance with a system designed to assure that qualified personnel properly gather and evaluate the information submitted. Based on my inquiry of the person or persons who manage the system, or those persons directly responsible for gathering the information, the information submitted is, to the best of my knowledge and belief, true, accurate and complete. I am aware that there are significant penalties for submitting false information, including the possibility of fine and imprisonment for knowing violations. See 18 U.S.C. § 1001 and 33 USC § 1319. (Penalties under these statutes may include fines up to $10,000 and/or maximum imprisonment of between 6 months and 5 years.)

SIGNATURE OF PRINCIPAL EXECUTIVE OFFICER OR AUTHORIZED AGENT

TELEPHONE AREA	NUMBER	DATE YEAR	MO	DAY
281	575-2824	09	10	07

COMMENT AND EXPLANATIONS OF ANY VIOLATIONS (Reference all attachments here)

PERMITTEE NAME/ADDRESS (Include Facility Name/Location if different)

NATIONAL POLLUTANT DISCHARGE ELIMINATION SYSTEM (NPDES)
DISCHARGE MONITORING REPORT (DMR)

NAME: CITY OF HOUSTON
ADDRESS: KINGWOOD CENTRAL PLANT
4545 GROVEWAY
HOUSTON TX 77087-1122
FACILITY:
LOCATION:

PERMIT NUMBER: TX0066583
DISCHARGE NUMBER: 001 B

MAJOR
M - INTERIM II
TOTAL FACILITY DISCHARGE

☐ Check here if No Discharge

MONITORING PERIOD	YEAR	MO	DAY		YEAR	MO	DAY
FROM	09	07	01	TO	09	07	31

NOTE: Read instructions before completing this form.

PARAMETER		QUANTITY OR LOADING AVERAGE	QUANTITY OR LOADING MAXIMUM	QUANTITY OR LOADING UNITS	QUALITY OR CONCENTRATION MINIMUM	QUALITY OR CONCENTRATION AVERAGE	QUALITY OR CONCENTRATION MAXIMUM	QUALITY OR CONCENTRATION UNITS	NO. EX	FREQUENCY OF ANALYSIS	SAMPLE TYPE
COLIFORM, FECAL GENERAL 74055 1 0 0 EFFLUENT GROSS VALUE	SAMPLE MEASUREMENT	******	******		******	14	16		0	DAILY	GRAB
	PERMIT REQUIREMENT	******	******	**** ****	******	200 DA GEOAV	400 7 DA GEO	(13) #/100ML		DAILY	GRAB
BOD, CARBONACEOUS 05 DAY, 20C 80082 1 0 0 EFFLUENT GROSS VALUE	SAMPLE MEASUREMENT	97	******		******	2	10		0	5TIMES /WEEK	COMPOS
	PERMIT REQUIREMENT	292 DAILY AV	******	(26) LBS/DY	******	5 DAILY AV	20 DAILY MX	(19) MG/L		5TIMES /WEEK	COMPOS
	SAMPLE MEASUREMENT										
	PERMIT REQUIREMENT										
	SAMPLE MEASUREMENT										
	PERMIT REQUIREMENT										
	SAMPLE MEASUREMENT										
	PERMIT REQUIREMENT										
	SAMPLE MEASUREMENT										
	PERMIT REQUIREMENT										
	SAMPLE MEASUREMENT										
	PERMIT REQUIREMENT										

NAME/TITLE PRINCIPAL EXECUTIVE OFFICER

JUN CHANG
DEPUTY DIRECTOR

TYPED OR PRINTED

I certify under penalty of law that this document and all attachments were prepared under my direction or supervision in accordance with a system designed to assure that qualified personnel properly gather and evaluate the information submitted. Based on my inquiry of the person or persons who manage the system, or those persons directly responsible for gathering the information, the information submitted is, to the best of my knowledge and belief, true, accurate and complete. I am aware that there are significant penalties for submitting false information, including the possibility of fine and imprisonment for knowing violations. See 18 U.S.C. § 1001 and 33 USC § 1319. (Penalties under these statutes may include fines up to $10,000 and/or maximum imprisonment of between 6 month(s) and 5 years.)

SIGNATURE OF PRINCIPAL EXECUTIVE OFFICER OR AUTHORIZED AGENT

TELEPHONE AREA	TELEPHONE NUMBER	DATE YEAR	DATE MO	DATE DAY
281	575-2824	09	10	07

COMMENT AND EXPLANATIONS OF ANY VIOLATIONS (Reference all attachments here)

PERMITTEE NAME/ADDRESS (Include Facility Name/Location if different)

NATIONAL POLLUTANT DISCHARGE ELIMINATION SYSTEM (NPDES)
DISCHARGE MONITORING REPORT (DMR)

NAME: CITY OF HOUSTON
ADDRESS: KINGWOOD CENTRAL PLANT
4545 GROVEWAY
HOUSTON TX 77087-1122
FACILITY
LOCATION

PERMIT NUMBER: TX0066583
DISCHARGE NUMBER: 001 B

MAJOR
M - INTERIM II
TOTAL FACILITY DISCHARGE

☐ Check here if No Discharge

MONITORING PERIOD	YEAR	MO	DAY		YEAR	MO	DAY
FROM	09	08	01	TO	09	08	31

NOTE: Read instructions before completing this form.

PARAMETER		QUANTITY OR LOADING AVERAGE	QUANTITY OR LOADING MAXIMUM	QUANTITY OR LOADING UNITS	QUALITY OR CONCENTRATION MINIMUM	QUALITY OR CONCENTRATION AVERAGE	QUALITY OR CONCENTRATION MAXIMUM	QUALITY OR CONCENTRATION UNITS	NO. EX	FREQUENCY OF ANALYSIS	SAMPLE TYPE
OXYGEN, DISSOLVED (DO) 00300 1 0 0 EFFLUENT GROSS VALUE	SAMPLE MEASUREMENT	******	******		6.4	******	******		0	5TIMES /WEEK	GRAB
	PERMIT REQUIREMENT	******	******	**** ****	6.0 MO MIN	******	******	(19) MG/L		5TIMES /WEEK	GRAB
PH 00400 1 0 0 EFFLUENT GROSS VALUE	SAMPLE MEASUREMENT	******	******		7.0	******	7.6		0	5TIMES /WEEK	GRAB
	PERMIT REQUIREMENT	******	******	**** ****	6.0 MINIMUM	******	9.0 MAXIMUM	(12) SU		5TIMES /WEEK	GRAB
SOLIDS, TOTAL SUSPENDED 00530 1 0 0 EFFLUENT GROSS VALUE	SAMPLE MEASUREMENT	104	******		******	2	5		0	5TIMES /WEEK	COMPOS
	PERMIT REQUIREMENT	584 DAILY AV	******	(26) LBS/DY	******	10 DAILY AV	40 DAILY MX	(19) MG/L		5TIMES /WEEK	COMPOS
NITROGEN, AMMONIA TOTAL (AS N) 00610 1 0 0 EFFLUENT GROSS VALUE	SAMPLE MEASUREMENT	10.6	******		******	0.2	1.0		0	5TIMES /WEEK	COMPOS
	PERMIT REQUIREMENT	175 DAILY AV	******	(26) LBS/DY	******	3 DAILY AV	7 DAILY MX	(19) MG/L		5TIMES /WEEK	COMPOS
FLOW, IN CONDUIT OR THRU TREATMENT PLANT 50050 P 0 0 SEE COMMENTS BELOW	SAMPLE MEASUREMENT	******	7858		******	******	******		0	CONTIN UOUS	TOTALZ
	PERMIT REQUIREMENT	******	25678 2HR PEAK	(78) GPM	******	******	******	**** ****		CONTIN UOUS	TOTALZ
FLOW, IN CONDUIT OR THRU TREATMENT PLANT 50050 Y 0 0 ANNUAL AVERAGE	SAMPLE MEASUREMENT	5.146	******		******	******	******		0	CONTIN UOUS	TOTALZ
	PERMIT REQUIREMENT	7.0 ANNL AVG	******	(03) MGD	******	******	******	**** ****		CONTIN UOUS	TOTALZ
FLOW, IN CONDUIT OR THRU TREATMENT PLANT 50050 1 0 0 EFFLUENT GROSS VALUE	SAMPLE MEASUREMENT	5.165	5.726		******	******	******		0	CONTIN UOUS	TOTALZ
	PERMIT REQUIREMENT	REPORT DAILY AV	REPORT DAILY MX	(03) MGD	******	******	******	**** ****		CONTIN UOUS	TOTALZ

NAME/TITLE PRINCIPAL EXECUTIVE OFFICER

JUN CHANG
DEPUTY DIRECTOR

TYPED OR PRINTED

I certify under penalty of law that this document and all attachments were prepared under my direction or supervision in accordance with a system designed to assure that qualified personnel properly gather and evaluate the information submitted. Based on my inquiry of the person or persons who manage the system, or those persons directly responsible for gathering the information, the information submitted is, to the best of my knowledge and belief, true, accurate and complete. I am aware that there are significant penalties for submitting false information, including the possibility of fine and imprisonment for knowing violations. See 18 U.S.C. § 1001 and 33 USC § 1319. (Penalties under these statutes may include fines up to $10,000 and/or maximum imprisonment of between 6 months and 5 years.)

SIGNATURE OF PRINCIPAL EXECUTIVE OFFICER OR AUTHORIZED AGENT

TELEPHONE AREA	TELEPHONE NUMBER	DATE YEAR	DATE MO	DATE DAY
281	575-2824	09	10	07

COMMENT AND EXPLANATIONS OF ANY VIOLATIONS (Reference all attachments here)

PERMITTEE NAME/ADDRESS (Include Facility Name/Location if different)

NATIONAL POLLUTANT DISCHARGE ELIMINATION SYSTEM (NPDES)
DISCHARGE MONITORING REPORT (DMR)

NAME: CITY OF HOUSTON
ADDRESS: KINGWOOD CENTRAL PLANT
4545 GROVEWAY
HOUSTON TX 77087-1122
FACILITY
LOCATION

PERMIT NUMBER: TX0066583
DISCHARGE NUMBER: 001 B

MAJOR
M - INTERIM II
TOTAL FACILITY DISCHARGE

☐ Check here if No Discharge

MONITORING PERIOD	YEAR	MO	DAY		YEAR	MO	DAY
FROM	09	08	01	TO	09	08	31

NOTE: Read instructions before completing this form.

PARAMETER		QUANTITY OR LOADING AVERAGE	QUANTITY OR LOADING MAXIMUM	QUANTITY OR LOADING UNITS	QUALITY OR CONCENTRATION MINIMUM	QUALITY OR CONCENTRATION AVERAGE	QUALITY OR CONCENTRATION MAXIMUM	QUALITY OR CONCENTRATION UNITS	NO. EX	FREQUENCY OF ANALYSIS	SAMPLE TYPE
COLIFORM, FECAL GENERAL 74055 1 0 0 EFFLUENT GROSS VALUE	SAMPLE MEASUREMENT	******	******		******	14	16		0	DAILY	GRAB
	PERMIT REQUIREMENT	******	******	**** ****	******	200 DA GEOAV	400 7 DA GEO	(13) #/100ML		DAILY	GRAB
BOD, CARBONACEOUS 05 DAY, 20C 80082 1 0 0 EFFLUENT GROSS VALUE	SAMPLE MEASUREMENT	89	******		******	2	4		0	5TIMES /WEEK	COMPOS
	PERMIT REQUIREMENT	292 DAILY AV	******	(26) LBS/DY	******	5 DAILY AV	20 DAILY MX	(19) MG/L		5TIMES /WEEK	COMPOS
	SAMPLE MEASUREMENT										
	PERMIT REQUIREMENT										
	SAMPLE MEASUREMENT										
	PERMIT REQUIREMENT										
	SAMPLE MEASUREMENT										
	PERMIT REQUIREMENT										
	SAMPLE MEASUREMENT										
	PERMIT REQUIREMENT										
	SAMPLE MEASUREMENT										
	PERMIT REQUIREMENT										

NAME/TITLE PRINCIPAL EXECUTIVE OFFICER

JUN CHANG
DEPUTY DIRECTOR

TYPED OR PRINTED

I certify under penalty of law that this document and all attachments were prepared under my direction or supervision in accordance with a system designed to assure that qualified personnel properly gather and evaluate the information submitted. Based on my inquiry of the person or persons who manage the system, or those persons directly responsible for gathering the information, the information submitted is, to the best of my knowledge and belief, true, accurate and complete. I am aware that there are significant penalties for submitting false information, including the possibility of fine and imprisonment for knowing violations. See 18 U.S.C. § 1001 and 33 USC § 1319. (Penalties under these statutes may include fines up to $10,000 and/or maximum imprisonment of between 6 months and 5 years.)

SIGNATURE OF PRINCIPAL EXECUTIVE OFFICER OR AUTHORIZED AGENT

TELEPHONE AREA	TELEPHONE NUMBER	DATE YEAR	DATE MO	DATE DAY
281	575-2824	09	10	07

COMMENT AND EXPLANATIONS OF ANY VIOLATIONS (Reference all attachments here)

PERMITTEE NAME/ADDRESS (Include Facility Name/Location if different)

NATIONAL POLLUTANT DISCHARGE ELIMINATION SYSTEM (NPDES)
DISCHARGE MONITORING REPORT (DMR)

NAME: CITY OF HOUSTON
ADDRESS: 4545 GROVEWAY
HOUSTON TX 77087-1122

FACILITY: KINGWOOD WEST WWTP
LOCATION: HUMBLE, TX 77339

PERMIT NUMBER: TX0088501
DISCHARGE NUMBER: 001 A

MINOR

M - INTERIM I
DOMESTIC FACILITY - 001 EFFLUENT

☐ Check here if No Discharge

MONITORING PERIOD	YEAR	MO	DAY		YEAR	MO	DAY
FROM	07	09	01	TO	07	09	30

NOTE: Read instructions before completing this form.

PARAMETER		QUANTITY OR LOADING			QUALITY OR CONCENTRATION				NO. EX	FREQUENCY OF ANALYSIS	SAMPLE TYPE
		AVERAGE	MAXIMUM	UNITS	MINIMUM	AVERAGE	MAXIMUM	UNITS			
OXYGEN, DISSOLVED (DO) 00300 1 0 0 EFFLUENT GROSS VALUE	SAMPLE MEASUREMENT	******	******		6.9	******	******		0	WEEKLY	GRAB
	PERMIT REQUIREMENT	******	******	**** ****	6.0 MO MIN	******	******	(19) MG/L		WEEKLY	GRAB
PH 00400 1 0 0 EFFLUENT GROSS VALUE	SAMPLE MEASUREMENT	******	******		7.5	******	7.8		0	WEEKLY	GRAB
	PERMIT REQUIREMENT	******	******	**** ****	6.0 MINIMUM	******	9.0 MAXIMUM	(12) SU		ONCE/ MONTH	GRAB
SOLIDS, TOTAL SUSPENDED 00530 1 0 0 EFFLUENT GROSS VALUE	SAMPLE MEASUREMENT	9	******		******	4	5		0	WEEKLY	COMPOS
	PERMIT REQUIREMENT	47 DAILY AV	******	(26) LBS/DY	******	15 DAILY AV	60 SINGGRAB	(19) MG/L		WEEKLY	GRAB
NITROGEN, AMMONIA TOTAL (AS N) 00610 1 0 0 EFFLUENT GROSS VALUE	SAMPLE MEASUREMENT	0.3	******		******	0.1	0.2		0	WEEKLY	COMPOS
	PERMIT REQUIREMENT	9.5 DAILY AV	******	(26) LBS/DY	******	3 DAILY AV	15 SINGGRAB	(19) MG/L		WEEKLY	GRAB
FLOW, IN CONDUIT OR THRU TREATMENT PLANT 50050 1 0 0 EFFLUENT GROSS VALUE	SAMPLE MEASUREMENT	0.341	0.429		******	******	******		0	CONTIN UOUS	TOTALZ
	PERMIT REQUIREMENT	0.378 DAILY AV	REPORT DAILY MX	(03) MGD	******	******	******	**** ****		WEEK-DAYS	INSTAN
CHLORINE, TOTAL RESIDUAL 50060 1 0 0 EFFLUENT GROSS VALUE	SAMPLE MEASUREMENT	******	******		1.1	******	3.4		0	DAILY	GRAB
	PERMIT REQUIREMENT	******	******	**** ****	1.0 MO MIN	******	4.0 MO MAX	(19) MG/L		WEEK-DAYS	GRAB
E. COLI 51040 1 0 0 EFFLUENT GROSS VALUE	SAMPLE MEASUREMENT	******	******		******				0	WEEKLY	GRAB
	PERMIT REQUIREMENT	******	******	**** ****	******	126 DAILY AV	394 SINGGRAB	(3Z) C/100ML		WEEKLY	GRAB

NAME/TITLE PRINCIPAL EXECUTIVE OFFICER

JUN CHANG
DEPUTY DIRECTOR

TYPED OR PRINTED

I certify under penalty of law that this document and all attachments were prepared under my direction or supervision in accordance with a system designed to assure that qualified personnel properly gather and evaluate the information submitted. Based on my inquiry of the person or persons who manage the system, or those persons directly responsible for gathering the information, the information submitted is, to the best of my knowledge and belief, true, accurate and complete. I am aware that there are significant penalties for submitting false information, including the possibility of fine and imprisonment for knowing violations. See 18 U.S.C. § 1001 and 33 USC § 1319. (Penalties under these statutes may include fines up to $10,000 and or maximum imprisonment of between 6 months and 5 years.)

SIGNATURE OF PRINCIPAL EXECUTIVE OFFICER OR AUTHORIZED AGENT

TELEPHONE		DATE		
281	575-2824	09	10	07
AREA	NUMBER	YEAR	MO	DAY

COMMENT AND EXPLANATIONS OF ANY VIOLATIONS (Reference all attachments here)

PERMITTEE NAME/ADDRESS (Include Facility Name/Location if different)

NATIONAL POLLUTANT DISCHARGE ELIMINATION SYSTEM (NPDES)
DISCHARGE MONITORING REPORT (DMR)

NAME: CITY OF HOUSTON
ADDRESS: 4545 GROVEWAY
HOUSTON, TX 77087-1122

FACILITY: KINGWOOD WEST WWTP
LOCATION: HUMBLE, TX 77339

PERMIT NUMBER: TX0088501
DISCHARGE NUMBER: 001 A

MINOR
M - INTERIM I
DOMESTIC FACILITY - 001 EFFLUENT

☐ Check here if No Discharge

MONITORING PERIOD	YEAR	MO	DAY		YEAR	MO	DAY
FROM	07	09	01	TO	07	09	30

NOTE: Read instructions before completing this form.

PARAMETER		QUANTITY OR LOADING			QUALITY OR CONCENTRATION				NO. EX	FREQUENCY OF ANALYSIS	SAMPLE TYPE
		AVERAGE	MAXIMUM	UNITS	MINIMUM	AVERAGE	MAXIMUM	UNITS			
BOD, CARBONACEOUS 05 DAY, 20C 80082 1 0 0 EFFLUENT GROSS VALUE	SAMPLE MEASUREMENT	8	******		******	3	5		0	ONCE/WEEK	COMPOS
	PERMIT REQUIREMENT	32 DAILY AVG	****** ******	(26) LBS/DY	***** *****	10 DAILY AVG	35 SINGLEGRAB	(19) MG/L		ONCE/WEEK	GRAB
	SAMPLE MEASUREMENT										
	PERMIT REQUIREMENT										
	SAMPLE MEASUREMENT										
	PERMIT REQUIREMENT										
	SAMPLE MEASUREMENT										
	PERMIT REQUIREMENT										
	SAMPLE MEASUREMENT										
	PERMIT REQUIREMENT										
	SAMPLE MEASUREMENT										
	PERMIT REQUIREMENT										
	SAMPLE MEASUREMENT										
	PERMIT REQUIREMENT										

NAME/TITLE PRINCIPAL EXECUTIVE OFFICER

JUN CHANG
DEPUTY DIRECTOR

TYPED OR PRINTED

I certify under penalty of law that this document and all attachments were prepared under my direction or supervision in accordance with a system designed to assure that qualified personnel properly gather and evaluate the information submitted. Based on my inquiry of the person or persons who manage the system, or those persons directly responsible for gathering the information, the information submitted is, to the best of my knowledge and belief, true, accurate and complete. I am aware that there are significant penalties for submitting false information, including the possibility of fine and imprisonment for knowing violations. See 18 U.S.C. § 1001 and 33 USC § 1319. (Penalties under these statutes may include fines up to $10,000 and/or maximum imprisonment of between 6 months and 5 years.)

SIGNATURE OF PRINCIPAL EXECUTIVE OFFICER OR AUTHORIZED AGENT

TELEPHONE		DATE		
281	575-2824	09	10	07
AREA	NUMBER	YEAR	MO	DAY

COMMENT AND EXPLANATIONS OF ANY VIOLATIONS (Reference all attachments here)

PERMITTEE NAME/ADDRESS (Include Facility Name/Location if different)

NATIONAL POLLUTANT DISCHARGE ELIMINATION SYSTEM (NPDES)
DISCHARGE MONITORING REPORT (DMR)

NAME CITY OF HOUSTON
ADDRESS 4545 GROVEWAY
HOUSTON TX 77087-1122

FACILITY KINGWOOD WEST WWTP
LOCATION HUMBLE, TX 77339

TX0088501 — PERMIT NUMBER
001 A — DISCHARGE NUMBER

MINOR
M - INTERIM I
DOMESTIC FACILITY - 001 EFFLUENT

MONITORING PERIOD	YEAR	MO	DAY		YEAR	MO	DAY
FROM	07	10	01	TO	07	10	31

☐ Check here if No Discharge

NOTE: Read instructions before completing this form.

PARAMETER		QUANTITY OR LOADING AVERAGE	QUANTITY OR LOADING MAXIMUM	QUANTITY OR LOADING UNITS	QUALITY OR CONCENTRATION MINIMUM	QUALITY OR CONCENTRATION AVERAGE	QUALITY OR CONCENTRATION MAXIMUM	QUALITY OR CONCENTRATION UNITS	NO. EX	FREQUENCY OF ANALYSIS	SAMPLE TYPE
OXYGEN, DISSOLVED (DO) 00300 1 0 0 EFFLUENT GROSS VALUE	SAMPLE MEASUREMENT	******	******		6.7	******	******		0	WEEKLY	GRAB
	PERMIT REQUIREMENT	******	******	**** ****	6.0 MO MIN	******	******	(19) MG/L		WEEKLY	GRAB
PH 00400 1 0 0 EFFLUENT GROSS VALUE	SAMPLE MEASUREMENT	******	******		7.5	******	7.6		0	WEEKLY	GRAB
	PERMIT REQUIREMENT	******	******	**** ****	6.0 MINIMUM	******	9.0 MAXIMUM	(12) SU		ONCE/ MONTH	GRAB
SOLIDS, TOTAL SUSPENDED 00530 1 0 0 EFFLUENT GROSS VALUE	SAMPLE MEASUREMENT	14	******		******	4	9		0	WEEKLY	COMPOS
	PERMIT REQUIREMENT	47 DAILY AV	******	(26) LBS/DY	******	15 DAILY AV	60 SINGGRAB	(19) MG/L		WEEKLY	GRAB
NITROGEN, AMMONIA TOTAL (AS N) 00610 1 0 0 EFFLUENT GROSS VALUE	SAMPLE MEASUREMENT	1.1	******		******	0.4	1.3		0	WEEKLY	COMPOS
	PERMIT REQUIREMENT	9.5 DAILY AV	******	(26) LBS/DY	******	3 DAILY AV	15 SINGGRAB	(19) MG/L		WEEKLY	GRAB
FLOW, IN CONDUIT OR THRU TREATMENT PLANT 50050 1 0 0 EFFLUENT GROSS VALUE	SAMPLE MEASUREMENT	0.367	0.810		******	******	******		0	CONTIN UOUS	TOTAL2
	PERMIT REQUIREMENT	0.378 DAILY AV	REPORT DAILY MX	(03) MGD	******	******	******	**** ****		WEEK-DAYS	INSTAN
CHLORINE, TOTAL RESIDUAL 50060 1 0 0 EFFLUENT GROSS VALUE	SAMPLE MEASUREMENT	******	******		1.0	******	3.2		0	DAILY	GRAB
	PERMIT REQUIREMENT	******	******	**** ****	1.0 MO MIN	******	4.0 MO MAX	(19) MG/L		WEEK-DAYS	GRAB
E. COLI 51040 1 0 0 EFFLUENT GROSS VALUE	SAMPLE MEASUREMENT	******	******		******				0	WEEKLY	GRAB
	PERMIT REQUIREMENT	******	******	**** ****	******	126 DAILY AV	394 SINGGRAB	(3Z) C/100ML		WEEKLY	GRAB

NAME/TITLE PRINCIPAL EXECUTIVE OFFICER

JUN CHANG
DEPUTY DIRECTOR

TYPED OR PRINTED

I certify under penalty of law that this document and all attachments were prepared under my direction or supervision in accordance with a system designed to assure that qualified personnel properly gather and evaluate the information submitted. Based on my inquiry of the person or persons who manage the system, or those persons directly responsible for gathering the information, the information submitted is, to the best of my knowledge and belief, true, accurate and complete. I am aware that there are significant penalties for submitting false information, including the possibility of fine and imprisonment for knowing violations. See 18 U.S.C. § 1001 and 33 USC § 1319. (Penalties under these statutes may include fines up to $10,000 and or maximum imprisonment of between 6 months and 5 years.)

SIGNATURE OF PRINCIPAL EXECUTIVE OFFICER OR AUTHORIZED AGENT

TELEPHONE AREA	TELEPHONE NUMBER	DATE YEAR	DATE MO	DATE DAY
281	575-2824	09	10	07

COMMENT AND EXPLANATIONS OF ANY VIOLATIONS (Reference all attachments here)

PERMITTEE NAME/ADDRESS (Include Facility Name/Location if different)

NATIONAL POLLUTANT DISCHARGE ELIMINATION SYSTEM (NPDES)
DISCHARGE MONITORING REPORT (DMR)

NAME CITY OF HOUSTON
ADDRESS 4545 GROVEWAY
HOUSTON, TX 77087-1122

FACILITY KINGWOOD WEST WWTP
LOCATION HUMBLE, TX 77339

PERMIT NUMBER	DISCHARGE NUMBER
TX0088501	001 A

MINOR

M - INTERIM I
DOMESTIC FACILITY - 001 EFFLUENT

☐ Check here if No Discharge

MONITORING PERIOD	YEAR	MO	DAY		YEAR	MO	DAY
FROM	07	10	01	TO	07	10	31

NOTE: Read instructions before completing this form.

PARAMETER		QUANTITY OR LOADING AVERAGE	QUANTITY OR LOADING MAXIMUM	QUANTITY OR LOADING UNITS	QUALITY OR CONCENTRATION MINIMUM	QUALITY OR CONCENTRATION AVERAGE	QUALITY OR CONCENTRATION MAXIMUM	QUALITY OR CONCENTRATION UNITS	NO. EX	FREQUENCY OF ANALYSIS	SAMPLE TYPE
BOD, CARBONACEOUS 05 DAY, 20C 80082 1 0 0 EFFLUENT GROSS VALUE	SAMPLE MEASUREMENT	10	******		******	2	4		0	ONCE/ WEEK	COMPOS
	PERMIT REQUIREMENT	32 DAILY AVG	****** ******	(26) LBS/DY	***** *****	10 DAILY AVG	35 SINGLEGRAB	(19) MG/L		ONCE/ WEEK	GRAB
	SAMPLE MEASUREMENT										
	PERMIT REQUIREMENT										
	SAMPLE MEASUREMENT										
	PERMIT REQUIREMENT										
	SAMPLE MEASUREMENT										
	PERMIT REQUIREMENT										
	SAMPLE MEASUREMENT										
	PERMIT REQUIREMENT										
	SAMPLE MEASUREMENT										
	PERMIT REQUIREMENT										
	SAMPLE MEASUREMENT										
	PERMIT REQUIREMENT										

NAME/TITLE PRINCIPAL EXECUTIVE OFFICER

JUN CHANG
DEPUTY DIRECTOR

TYPED OR PRINTED

I certify under penalty of law that this document and all attachments were prepared under my direction or supervision in accordance with a system designed to assure that qualified personnel properly gather and evaluate the information submitted. Based on my inquiry of the person or persons who manage the system, or those persons directly responsible for gathering the information, the information submitted is, to the best of my knowledge and belief, true, accurate and complete. I am aware that there are significant penalties for submitting false information, including the possibility of fine and imprisonment for knowing violations. See 18 U.S.C. § 1001 and 33 USC § 1319. (Penalties under these statutes may include fines up to $10,000 and/or imprisonment of between 6 months and 5 years.)

SIGNATURE OF PRINCIPAL EXECUTIVE OFFICER OR AUTHORIZED AGENT

TELEPHONE AREA	TELEPHONE NUMBER	DATE YEAR	DATE MO	DATE DAY
281	575-2824	09	10	07

COMMENT AND EXPLANATIONS OF ANY VIOLATIONS (Reference all attachments here)

PERMITTEE NAME/ADDRESS (Include Facility Name/Location if different)

NATIONAL POLLUTANT DISCHARGE ELIMINATION SYSTEM (NPDES)
DISCHARGE MONITORING REPORT (DMR)

NAME CITY OF HOUSTON
ADDRESS 4545 GROVEWAY
HOUSTON TX 77087-1122

FACILITY KINGWOOD WEST WWTP
LOCATION HUMBLE, TX 77339

TX0088501 — PERMIT NUMBER
001 A — DISCHARGE NUMBER

MINOR

M - INTERIM I
DOMESTIC FACILITY - 001 EFFLUENT

MONITORING PERIOD	YEAR	MO	DAY		YEAR	MO	DAY
FROM	07	11	01	TO	07	11	30

☐ Check here if No Discharge

NOTE: Read instructions before completing this form.

PARAMETER		QUANTITY OR LOADING AVERAGE	QUANTITY OR LOADING MAXIMUM	QUANTITY OR LOADING UNITS	QUALITY OR CONCENTRATION MINIMUM	QUALITY OR CONCENTRATION AVERAGE	QUALITY OR CONCENTRATION MAXIMUM	QUALITY OR CONCENTRATION UNITS	NO. EX	FREQUENCY OF ANALYSIS	SAMPLE TYPE
OXYGEN, DISSOLVED (DO) 00300 1 0 0 EFFLUENT GROSS VALUE	SAMPLE MEASUREMENT	******	******		7.1	******	******		0	WEEKLY	GRAB
	PERMIT REQUIREMENT	******	******	**** ****	6.0 MO MIN	******	******	(19) MG/L		WEEKLY	GRAB
PH 00400 1 0 0 EFFLUENT GROSS VALUE	SAMPLE MEASUREMENT	******	******		7.4	******	7.6		0	WEEKLY	GRAB
	PERMIT REQUIREMENT	******	******	**** ****	6.0 MINIMUM	******	9.0 MAXIMUM	(12) SU		ONCE/ MONTH	GRAB
SOLIDS, TOTAL SUSPENDED 00530 1 0 0 EFFLUENT GROSS VALUE	SAMPLE MEASUREMENT	13	******		******	4	9		0	WEEKLY	COMPOS
	PERMIT REQUIREMENT	47 DAILY AV	******	(26) LBS/DY	******	15 DAILY AV	60 SINGGRAB	(19) MG/L		WEEKLY	GRAB
NITROGEN, AMMONIA TOTAL (AS N) 00610 1 0 0 EFFLUENT GROSS VALUE	SAMPLE MEASUREMENT	0.5	******		******	0.2	0.3		0	WEEKLY	COMPOS
	PERMIT REQUIREMENT	9.5 DAILY AV	******	(26) LBS/DY	******	3 DAILY AV	15 SINGGRAB	(19) MG/L		WEEKLY	GRAB
FLOW, IN CONDUIT OR THRU TREATMENT PLANT 50050 1 0 0 EFFLUENT GROSS VALUE	SAMPLE MEASUREMENT	0.357	0.663		******	******	******		0	CONTIN UOUS	TOTALZ
	PERMIT REQUIREMENT	0.378 DAILY AV	REPORT DAILY MX	(03) MGD	******	******	******	**** ****		WEEK-DAYS	INSTAN
CHLORINE, TOTAL RESIDUAL 50060 1 0 0 EFFLUENT GROSS VALUE	SAMPLE MEASUREMENT	******	******		1.1	******	2.0		0	DAILY	GRAB
	PERMIT REQUIREMENT	******	******	**** ****	1.0 MO MIN	******	4.0 MO MAX	(19) MG/L		WEEK-DAYS	GRAB
E. COLI 51040 1 0 0 EFFLUENT GROSS VALUE	SAMPLE MEASUREMENT	******	******		******				0	WEEKLY	GRAB
	PERMIT REQUIREMENT	******	******	**** ****	******	126 DAILY AV	394 SINGGRAB	(3Z) C/100ML		WEEKLY	GRAB

NAME/TITLE PRINCIPAL EXECUTIVE OFFICER

JUN CHANG
DEPUTY DIRECTOR

TYPED OR PRINTED

I certify under penalty of law that this document and all attachments were prepared under my direction or supervision in accordance with a system designed to assure that qualified personnel properly gather and evaluate the information submitted. Based on my inquiry of the person or persons who manage the system, or those persons directly responsible for gathering the information, the information submitted is, to the best of my knowledge and belief, true, accurate and complete. I am aware that there are significant penalties for submitting false information, including the possibility of fine and imprisonment for knowing violations. See 18 U.S.C. § 1001 and 33 USC § 1319. (Penalties under these statutes may include fines up to $10,000 and/or maximum imprisonment of between 6 months and 5 years.)

SIGNATURE OF PRINCIPAL EXECUTIVE OFFICER OR AUTHORIZED AGENT

TELEPHONE AREA	TELEPHONE NUMBER	DATE YEAR	DATE MO	DATE DAY
281	575-2824	09	10	07

COMMENT AND EXPLANATIONS OF ANY VIOLATIONS (Reference all attachments here)

PERMITTEE NAME/ADDRESS (Include Facility Name/Location if different)

NATIONAL POLLUTANT DISCHARGE ELIMINATION SYSTEM (NPDES)
DISCHARGE MONITORING REPORT (DMR)

NAME: CITY OF HOUSTON
ADDRESS: 4545 GROVEWAY
HOUSTON, TX 77087-1122

FACILITY: KINGWOOD WEST WWTP
LOCATION: HUMBLE, TX 77339

PERMIT NUMBER: TX0088501
DISCHARGE NUMBER: 001 A

MINOR

M - INTERIM I
DOMESTIC FACILITY - 001 EFFLUENT

MONITORING PERIOD

FROM YEAR	MO	DAY	TO YEAR	MO	DAY
07	11	01	07	11	30

☐ Check here if No Discharge

NOTE: Read instructions before completing this form.

PARAMETER		QUANTITY OR LOADING			QUALITY OR CONCENTRATION				NO. EX	FREQUENCY OF ANALYSIS	SAMPLE TYPE
		AVERAGE	MAXIMUM	UNITS	MINIMUM	AVERAGE	MAXIMUM	UNITS			
BOD, CARBONACEOUS 05 DAY, 20C 80082 1 0 0 EFFLUENT GROSS VALUE	SAMPLE MEASUREMENT	6	******		******	2	3		0	ONCE/ WEEK	COMPOS
	PERMIT REQUIREMENT	32 DAILY AVG	****** ******	(26) LBS/DY	***** *****	10 DAILY AVG	35 SINGLEGRAB	(19) MG/L		ONCE/ WEEK	GRAB
	SAMPLE MEASUREMENT										
	PERMIT REQUIREMENT										
	SAMPLE MEASUREMENT										
	PERMIT REQUIREMENT										
	SAMPLE MEASUREMENT										
	PERMIT REQUIREMENT										
	SAMPLE MEASUREMENT										
	PERMIT REQUIREMENT										
	SAMPLE MEASUREMENT										
	PERMIT REQUIREMENT										
	SAMPLE MEASUREMENT										
	PERMIT REQUIREMENT										

NAME/TITLE PRINCIPAL EXECUTIVE OFFICER

JUN CHANG
DEPUTY DIRECTOR

TYPED OR PRINTED

I certify under penalty of law that this document and all attachments were prepared under my direction or supervision in accordance with a system designed to assure that qualified personnel properly gather and evaluate the information submitted. Based on my inquiry of the person or persons who manage the system, or those persons directly responsible for gathering the information, the information submitted is, to the best of my knowledge and belief, true, accurate and complete. I am aware that there are significant penalties for submitting false information, including the possibility of fine and imprisonment for knowing violations. See 18 U.S.C. § 1001 and 33 USC § 1319. (Penalties under these statutes may include fines up to $10,000 and/or maximum imprisonment of between 6 months and 5 years.)

SIGNATURE OF PRINCIPAL EXECUTIVE OFFICER OR AUTHORIZED AGENT

TELEPHONE AREA	NUMBER	DATE YEAR	MO	DAY
281	575-2824	09	10	07

COMMENT AND EXPLANATIONS OF ANY VIOLATIONS (Reference all attachments here)

PERMITTEE NAME/ADDRESS (Include Facility Name/Location if different)

NATIONAL POLLUTANT DISCHARGE ELIMINATION SYSTEM (NPDES)
DISCHARGE MONITORING REPORT (DMR)

NAME CITY OF HOUSTON
ADDRESS 4545 GROVEWAY
HOUSTON TX 77087-1122

FACILITY KINGWOOD WEST WWTP
LOCATION HUMBLE, TX 77339

PERMIT NUMBER: TX0088501
DISCHARGE NUMBER: 001 A

MINOR

M - INTERIM I
DOMESTIC FACILITY - 001 EFFLUENT

MONITORING PERIOD

FROM YEAR	MO	DAY	TO YEAR	MO	DAY
07	12	01	07	12	31

☐ Check here if No Discharge

NOTE: Read instructions before completing this form.

PARAMETER		QUANTITY OR LOADING AVERAGE	QUANTITY OR LOADING MAXIMUM	QUANTITY OR LOADING UNITS	QUALITY OR CONCENTRATION MINIMUM	QUALITY OR CONCENTRATION AVERAGE	QUALITY OR CONCENTRATION MAXIMUM	QUALITY OR CONCENTRATION UNITS	NO. EX	FREQUENCY OF ANALYSIS	SAMPLE TYPE
OXYGEN, DISSOLVED (DO) 00300 1 0 0 EFFLUENT GROSS VALUE	SAMPLE MEASUREMENT	******	******		7.1	******	******		0	WEEKLY	GRAB
	PERMIT REQUIREMENT	******	******	**** ****	6.0 MO MIN	******	******	(19) MG/L		WEEKLY	GRAB
PH 00400 1 0 0 EFFLUENT GROSS VALUE	SAMPLE MEASUREMENT	******	******		7.2	******	7.6		0	WEEKLY	GRAB
	PERMIT REQUIREMENT	******	******	**** ****	6.0 MINIMUM	******	9.0 MAXIMUM	(12) SU		ONCE/ MONTH	GRAB
SOLIDS, TOTAL SUSPENDED 00530 1 0 0 EFFLUENT GROSS VALUE	SAMPLE MEASUREMENT	14	******		******	5	16		0	WEEKLY	COMPOS
	PERMIT REQUIREMENT	47 DAILY AV	******	(26) LBS/DY	******	15 DAILY AV	60 SINGGRAB	(19) MG/L		WEEKLY	GRAB
NITROGEN, AMMONIA TOTAL (AS N) 00610 1 0 0 EFFLUENT GROSS VALUE	SAMPLE MEASUREMENT	0.7	******		******	0.3	0.4		0	WEEKLY	COMPOS
	PERMIT REQUIREMENT	9.5 DAILY AV	******	(26) LBS/DY	******	3 DAILY AV	15 SINGGRAB	(19) MG/L		WEEKLY	GRAB
FLOW, IN CONDUIT OR THRU TREATMENT PLANT 50050 1 0 0 EFFLUENT GROSS VALUE	SAMPLE MEASUREMENT	0.335	0.607		******	******	******		0	CONTIN UOUS	TOTALZ
	PERMIT REQUIREMENT	0.378 DAILY AV	REPORT DAILY MX	(03) MGD	******	******	******	**** ****		WEEK-DAYS	INSTAN
CHLORINE, TOTAL RESIDUAL 50060 1 0 0 EFFLUENT GROSS VALUE	SAMPLE MEASUREMENT	******	******		1.0	******	2.9		0	DAILY	GRAB
	PERMIT REQUIREMENT	******	******	**** ****	1.0 MO MIN	******	4.0 MO MAX	(19) MG/L		WEEK-DAYS	GRAB
E. COLI 51040 1 0 0 EFFLUENT GROSS VALUE	SAMPLE MEASUREMENT	******	******		******				0	WEEKLY	GRAB
	PERMIT REQUIREMENT	******	******	**** ****	******	126 DAILY AV	394 SINGGRAB	(3Z) C/100ML		WEEKLY	GRAB

NAME/TITLE PRINCIPAL EXECUTIVE OFFICER

JUN CHANG
DEPUTY DIRECTOR

TYPED OR PRINTED

I certify under penalty of law that this document and all attachments were prepared under my direction or supervision in accordance with a system designed to assure that qualified personnel properly gather and evaluate the information submitted. Based on my inquiry of the person or persons who manage the system, or those persons directly responsible for gathering the information, the information submitted is, to the best of my knowledge and belief, true, accurate and complete. I am aware that there are significant penalties for submitting false information, including the possibility of fine and imprisonment for knowing violations. See 18 U.S.C. § 1001 and 33 USC § 1319. (Penalties under these statutes may include fines up to $10,000 and/or maximum imprisonment of between 6 months and 5 years.)

SIGNATURE OF PRINCIPAL EXECUTIVE OFFICER OR AUTHORIZED AGENT

TELEPHONE AREA	NUMBER	DATE YEAR	MO	DAY
281	575-2824	09	10	07

COMMENT AND EXPLANATIONS OF ANY VIOLATIONS (Reference all attachments here)

PERMITTEE NAME/ADDRESS (Include Facility Name/Location if different)

NATIONAL POLLUTANT DISCHARGE ELIMINATION SYSTEM (NPDES)
DISCHARGE MONITORING REPORT (DMR)

NAME: CITY OF HOUSTON
ADDRESS: 4545 GROVEWAY
HOUSTON, TX 77087-1122

FACILITY: KINGWOOD WEST WWTP
LOCATION: HUMBLE, TX 77339

PERMIT NUMBER: TX0088501
DISCHARGE NUMBER: 001 A

MINOR
M - INTERIM I
DOMESTIC FACILITY - 001 EFFLUENT

MONITORING PERIOD

FROM YEAR	MO	DAY	TO YEAR	MO	DAY
07	12	01	07	12	31

☐ Check here if No Discharge

NOTE: Read instructions before completing this form.

PARAMETER		QUANTITY OR LOADING AVERAGE	QUANTITY OR LOADING MAXIMUM	QUANTITY OR LOADING UNITS	QUALITY OR CONCENTRATION MINIMUM	QUALITY OR CONCENTRATION AVERAGE	QUALITY OR CONCENTRATION MAXIMUM	QUALITY OR CONCENTRATION UNITS	NO. EX	FREQUENCY OF ANALYSIS	SAMPLE TYPE
BOD, CARBONACEOUS 05 DAY, 20C 80082 1 0 0 EFFLUENT GROSS VALUE	SAMPLE MEASUREMENT	6	******		******	2	4		0	ONCE/ WEEK	COMPOS
	PERMIT REQUIREMENT	32 DAILY AVG	****** ******	(26) LBS/DY	***** *****	10 DAILY AVG	35 SINGLEGRAB	(19) MG/L		ONCE/ WEEK	GRAB
	SAMPLE MEASUREMENT										
	PERMIT REQUIREMENT										
	SAMPLE MEASUREMENT										
	PERMIT REQUIREMENT										
	SAMPLE MEASUREMENT										
	PERMIT REQUIREMENT										
	SAMPLE MEASUREMENT										
	PERMIT REQUIREMENT										
	SAMPLE MEASUREMENT										
	PERMIT REQUIREMENT										
	SAMPLE MEASUREMENT										
	PERMIT REQUIREMENT										

NAME/TITLE PRINCIPAL EXECUTIVE OFFICER

JUN CHANG
DEPUTY DIRECTOR

TYPED OR PRINTED

I certify under penalty of law that this document and all attachments were prepared under my direction or supervision in accordance with a system designed to assure that qualified personnel properly gather and evaluate the information submitted. Based on my inquiry of the person or persons who manage the system, or those persons directly responsible for gathering the information, the information submitted is, to the best of my knowledge and belief, true, accurate and complete. I am aware that there are significant penalties for submitting false information, including the possibility of fine and imprisonment for knowing violations. See 18 U.S.C. § 1001 and 33 USC § 1319. (Penalties under these statutes may include fines up to $10,000 and/or maximum imprisonment of between 6 months and 5 years.)

SIGNATURE OF PRINCIPAL EXECUTIVE OFFICER OR AUTHORIZED AGENT

TELEPHONE AREA	TELEPHONE NUMBER	DATE YEAR	DATE MO	DATE DAY
281	575-2824	09	10	07

COMMENT AND EXPLANATIONS OF ANY VIOLATIONS (Reference all attachments here)

PERMITTEE NAME/ADDRESS (Include Facility Name/Location if different)

NATIONAL POLLUTANT DISCHARGE ELIMINATION SYSTEM (NPDES)
DISCHARGE MONITORING REPORT (DMR)

NAME CITY OF HOUSTON
ADDRESS 4545 GROVEWAY
HOUSTON TX 77087-1122

FACILITY KINGWOOD WEST WWTP
LOCATION HUMBLE, TX 77339

PERMIT NUMBER: TX0088501
DISCHARGE NUMBER: 001 A

MINOR
M - INTERIM I
DOMESTIC FACILITY - 001 EFFLUENT

☐ Check here if No Discharge

MONITORING PERIOD	YEAR	MO	DAY		YEAR	MO	DAY
FROM	08	01	01	TO	08	01	31

NOTE: Read instructions before completing this form.

PARAMETER		QUANTITY OR LOADING AVERAGE	QUANTITY OR LOADING MAXIMUM	QUANTITY OR LOADING UNITS	QUALITY OR CONCENTRATION MINIMUM	QUALITY OR CONCENTRATION AVERAGE	QUALITY OR CONCENTRATION MAXIMUM	QUALITY OR CONCENTRATION UNITS	NO. EX	FREQUENCY OF ANALYSIS	SAMPLE TYPE
OXYGEN, DISSOLVED (DO) 00300 1 0 0 EFFLUENT GROSS VALUE	SAMPLE MEASUREMENT	******	******		7.0	******	******		0	WEEKLY	GRAB
	PERMIT REQUIREMENT	******	******	**** ****	6.0 MO MIN	******	******	(19) MG/L		WEEKLY	GRAB
PH 00400 1 0 0 EFFLUENT GROSS VALUE	SAMPLE MEASUREMENT	******	******		7.2	******	7.3		0	WEEKLY	GRAB
	PERMIT REQUIREMENT	******	******	**** ****	6.0 MINIMUM	******	9.0 MAXIMUM	(12) SU		ONCE/ MONTH	GRAB
SOLIDS, TOTAL SUSPENDED 00530 1 0 0 EFFLUENT GROSS VALUE	SAMPLE MEASUREMENT	5	******		******	2	3		0	WEEKLY	COMPOS
	PERMIT REQUIREMENT	47 DAILY AV	******	(26) LBS/DY	******	15 DAILY AV	60 SINGGRAB	(19) MG/L		WEEKLY	GRAB
NITROGEN, AMMONIA TOTAL (AS N) 00610 1 0 0 EFFLUENT GROSS VALUE	SAMPLE MEASUREMENT	0.6	******		******	0.3	0.5		0	WEEKLY	COMPOS
	PERMIT REQUIREMENT	9.5 DAILY AV	******	(26) LBS/DY	******	3 DAILY AV	15 SINGGRAB	(19) MG/L		WEEKLY	GRAB
FLOW, IN CONDUIT OR THRU TREATMENT PLANT 50050 1 0 0 EFFLUENT GROSS VALUE	SAMPLE MEASUREMENT	0.304	0.584		******	******	******		0	CONTIN UOUS	TOTALZ
	PERMIT REQUIREMENT	0.378 DAILY AV	REPORT DAILY MX	(03) MGD	******	******	******	**** ****		WEEK-DAYS	INSTAN
CHLORINE, TOTAL RESIDUAL 50060 1 0 0 EFFLUENT GROSS VALUE	SAMPLE MEASUREMENT	******	******		1.2	******	2.4		0	DAILY	GRAB
	PERMIT REQUIREMENT	******	******	**** ****	1.0 MO MIN	******	4.0 MO MAX	(19) MG/L		WEEK-DAYS	GRAB
E. COLI 51040 1 0 0 EFFLUENT GROSS VALUE	SAMPLE MEASUREMENT	******	******		******				0	WEEKLY	GRAB
	PERMIT REQUIREMENT	******	******	**** ****	******	126 DAILY AV	394 SINGGRAB	(3Z) C/100ML		WEEKLY	GRAB

NAME/TITLE PRINCIPAL EXECUTIVE OFFICER

JUN CHANG
DEPUTY DIRECTOR

TYPED OR PRINTED

I certify under penalty of law that this document and all attachments were prepared under my direction or supervision in accordance with a system designed to assure that qualified personnel properly gather and evaluate the information submitted. Based on my inquiry of the person or persons who manage the system, or those persons directly responsible for gathering the information, the information submitted is, to the best of my knowledge and belief, true, accurate and complete. I am aware that there are significant penalties for submitting false information, including the possibility of fine and imprisonment for knowing violations. See 18 U.S.C. § 1001 and 33 USC § 1319. (Penalties under these statutes may include fines up to $10,000 and or maximum imprisonment of between 6 months and 5 years.)

SIGNATURE OF PRINCIPAL EXECUTIVE OFFICER OR AUTHORIZED AGENT

TELEPHONE AREA	TELEPHONE NUMBER	DATE YEAR	DATE MO	DATE DAY
281	575-2824	09	10	07

COMMENT AND EXPLANATIONS OF ANY VIOLATIONS (Reference all attachments here)

PERMITTEE NAME/ADDRESS (Include Facility Name/Location if different)

NATIONAL POLLUTANT DISCHARGE ELIMINATION SYSTEM (NPDES)
DISCHARGE MONITORING REPORT (DMR)

NAME: CITY OF HOUSTON
ADDRESS: 4545 GROVEWAY
HOUSTON, TX 77087-1122

FACILITY: KINGWOOD WEST WWTP
LOCATION: HUMBLE, TX 77339

TX0088501 — PERMIT NUMBER
001 A — DISCHARGE NUMBER

MINOR

M - INTERIM I
DOMESTIC FACILITY - 001 EFFLUENT

☐ Check here if No Discharge

MONITORING PERIOD	YEAR	MO	DAY		YEAR	MO	DAY
FROM	08	01	01	TO	08	01	31

NOTE: Read instructions before completing this form.

PARAMETER		QUANTITY OR LOADING			QUALITY OR CONCENTRATION				NO. EX	FREQUENCY OF ANALYSIS	SAMPLE TYPE
		AVERAGE	MAXIMUM	UNITS	MINIMUM	AVERAGE	MAXIMUM	UNITS			
BOD, CARBONACEOUS 05 DAY, 20C 80082 1 0 0 EFFLUENT GROSS VALUE	SAMPLE MEASUREMENT	3	******		******	1	2		0	ONCE/ WEEK	COMPOS
	PERMIT REQUIREMENT	32 DAILY AVG	****** ******	(26) LBS/DY	***** *****	10 DAILY AVG	35 SINGLEGRAB	(19) MG/L		ONCE/ WEEK	GRAB
	SAMPLE MEASUREMENT										
	PERMIT REQUIREMENT										
	SAMPLE MEASUREMENT										
	PERMIT REQUIREMENT										
	SAMPLE MEASUREMENT										
	PERMIT REQUIREMENT										
	SAMPLE MEASUREMENT										
	PERMIT REQUIREMENT										
	SAMPLE MEASUREMENT										
	PERMIT REQUIREMENT										
	SAMPLE MEASUREMENT										
	PERMIT REQUIREMENT										

NAME/TITLE PRINCIPAL EXECUTIVE OFFICER

JUN CHANG
DEPUTY DIRECTOR

TYPED OR PRINTED

I certify under penalty of law that this document and all attachments were prepared under my direction or supervision in accordance with a system designed to assure that qualified personnel properly gather and evaluate the information submitted. Based on my inquiry of the person or persons who manage the system, or those persons directly responsible for gathering the information, the information submitted is, to the best of my knowledge and belief, true, accurate and complete. I am aware that there are significant penalties for submitting false information, including the possibility of fine and imprisonment for knowing violations. See 18 U.S.C. § 1001 and 33 USC § 1319. (Penalties under these statutes may include fines up to $10,000 and/or maximum imprisonment of between 6 months and 5 years.)

SIGNATURE OF PRINCIPAL EXECUTIVE OFFICER OR AUTHORIZED AGENT

TELEPHONE		DATE		
281	575-2824	09	10	07
AREA	NUMBER	YEAR	MO	DAY

COMMENT AND EXPLANATIONS OF ANY VIOLATIONS (Reference all attachments here)

PERMITTEE NAME/ADDRESS (Include Facility Name/Location if different)

NATIONAL POLLUTANT DISCHARGE ELIMINATION SYSTEM (NPDES)
DISCHARGE MONITORING REPORT (DMR)

NAME: CITY OF HOUSTON
ADDRESS: 4545 GROVEWAY
HOUSTON TX 77087-1122

FACILITY: KINGWOOD WEST WWTP
LOCATION: HUMBLE, TX 77339

PERMIT NUMBER: TX0088501
DISCHARGE NUMBER: 001 A

MINOR
M - INTERIM I
DOMESTIC FACILITY - 001 EFFLUENT

☐ Check here if No Discharge

MONITORING PERIOD	YEAR	MO	DAY		YEAR	MO	DAY
FROM	08	02	01	TO	08	02	29

NOTE: Read instructions before completing this form.

PARAMETER		QUANTITY OR LOADING			QUALITY OR CONCENTRATION				NO. EX	FREQUENCY OF ANALYSIS	SAMPLE TYPE
		AVERAGE	MAXIMUM	UNITS	MINIMUM	AVERAGE	MAXIMUM	UNITS			
OXYGEN, DISSOLVED (DO) 00300 1 0 0 EFFLUENT GROSS VALUE	SAMPLE MEASUREMENT	******	******		7.0	******	******		0	WEEKLY	GRAB
	PERMIT REQUIREMENT	******	******	**** ****	6.0 MO MIN	******	******	(19) MG/L		WEEKLY	GRAB
PH 00400 1 0 0 EFFLUENT GROSS VALUE	SAMPLE MEASUREMENT	******	******		7.2	******	7.5		0	WEEKLY	GRAB
	PERMIT REQUIREMENT	******	******	**** ****	6.0 MINIMUM	******	9.0 MAXIMUM	(12) SU		ONCE/ MONTH	GRAB
SOLIDS, TOTAL SUSPENDED 00530 1 0 0 EFFLUENT GROSS VALUE	SAMPLE MEASUREMENT	5	******		******	2	4		0	WEEKLY	COMPOS
	PERMIT REQUIREMENT	47 DAILY AV	******	(26) LBS/DY	******	15 DAILY AV	60 SINGGRAB	(19) MG/L		WEEKLY	GRAB
NITROGEN, AMMONIA TOTAL (AS N) 00610 1 0 0 EFFLUENT GROSS VALUE	SAMPLE MEASUREMENT	0.4	******		******	0.1	0.3		0	WEEKLY	COMPOS
	PERMIT REQUIREMENT	9.5 DAILY AV	******	(26) LBS/DY	******	3 DAILY AV	15 SINGGRAB	(19) MG/L		WEEKLY	GRAB
FLOW, IN CONDUIT OR THRU TREATMENT PLANT 50050 1 0 0 EFFLUENT GROSS VALUE	SAMPLE MEASUREMENT	0.327	0.628		******	******	******		0	CONTIN UOUS	TOTALZ
	PERMIT REQUIREMENT	0.378 DAILY AV	REPORT DAILY MX	(03) MGD	******	******	******	**** ****		WEEK-DAYS	INSTAN
CHLORINE, TOTAL RESIDUAL 50060 1 0 0 EFFLUENT GROSS VALUE	SAMPLE MEASUREMENT	******	******		1.3	******	2.9		0	DAILY	GRAB
	PERMIT REQUIREMENT	******	******	**** ****	1.0 MO MIN	******	4.0 MO MAX	(19) MG/L		WEEK-DAYS	GRAB
E. COLI 51040 1 0 0 EFFLUENT GROSS VALUE	SAMPLE MEASUREMENT	******	******		******				0	WEEKLY	GRAB
	PERMIT REQUIREMENT	******	******	**** ****	******	126 DAILY AV	394 SINGGRAB	(3Z) C/100ML		WEEKLY	GRAB

NAME/TITLE PRINCIPAL EXECUTIVE OFFICER

JUN CHANG
DEPUTY DIRECTOR

TYPED OR PRINTED

I certify under penalty of law that this document and all attachments were prepared under my direction or supervision in accordance with a system designed to assure that qualified personnel properly gather and evaluate the information submitted. Based on my inquiry of the person or persons who manage the system, or those persons directly responsible for gathering the information, the information submitted is, to the best of my knowledge and belief, true, accurate and complete. I am aware that there are significant penalties for submitting false information, including the possibility of fine and imprisonment for knowing violations. See 18 U.S.C. § 1001 and 33 USC § 1319. (Penalties under these statutes may include fines up to $10,000 and or maximum imprisonment of between 6 months and 5 years.)

SIGNATURE OF PRINCIPAL EXECUTIVE OFFICER OR AUTHORIZED AGENT

TELEPHONE		DATE		
281	575-2824	09	10	07
AREA	NUMBER	YEAR	MO	DAY

COMMENT AND EXPLANATIONS OF ANY VIOLATIONS (Reference all attachments here)

PERMITTEE NAME/ADDRESS (Include Facility Name/Location if different)

NATIONAL POLLUTANT DISCHARGE ELIMINATION SYSTEM (NPDES)
DISCHARGE MONITORING REPORT (DMR)

NAME: CITY OF HOUSTON
ADDRESS: 4545 GROVEWAY
HOUSTON, TX 77087-1122

FACILITY: KINGWOOD WEST WWTP
LOCATION: HUMBLE, TX 77339

PERMIT NUMBER: TX0088501
DISCHARGE NUMBER: 001 A

MINOR

M - INTERIM I
DOMESTIC FACILITY - 001 EFFLUENT

☐ Check here if No Discharge

MONITORING PERIOD						
	YEAR	MO	DAY		YEAR	MO	DAY
FROM	08	02	01	TO	08	02	29

NOTE: Read instructions before completing this form.

PARAMETER		QUANTITY OR LOADING			QUALITY OR CONCENTRATION				NO. EX	FREQUENCY OF ANALYSIS	SAMPLE TYPE
		AVERAGE	MAXIMUM	UNITS	MINIMUM	AVERAGE	MAXIMUM	UNITS			
BOD, CARBONACEOUS 05 DAY, 20C 80082 1 0 0 EFFLUENT GROSS VALUE	SAMPLE MEASUREMENT	5	******		******	2	3		0	ONCE/ WEEK	COMPOS
	PERMIT REQUIREMENT	32 DAILY AVG	****** ******	(26) LBS/DY	***** *****	10 DAILY AVG	35 SINGLEGRAB	(19) MG/L		ONCE/ WEEK	GRAB
	SAMPLE MEASUREMENT										
	PERMIT REQUIREMENT										
	SAMPLE MEASUREMENT										
	PERMIT REQUIREMENT										
	SAMPLE MEASUREMENT										
	PERMIT REQUIREMENT										
	SAMPLE MEASUREMENT										
	PERMIT REQUIREMENT										
	SAMPLE MEASUREMENT										
	PERMIT REQUIREMENT										
	SAMPLE MEASUREMENT										
	PERMIT REQUIREMENT										

NAME/TITLE PRINCIPAL EXECUTIVE OFFICER

JUN CHANG
DEPUTY DIRECTOR

TYPED OR PRINTED

I certify under penalty of law that this document and all attachments were prepared under my direction or supervision in accordance with a system designed to assure that qualified personnel properly gather and evaluate the information submitted. Based on my inquiry of the person or persons who manage the system, or those persons directly responsible for gathering the information, the information submitted is, to the best of my knowledge and belief, true, accurate and complete. I am aware that there are significant penalties for submitting false information, including the possibility of fine and imprisonment for knowing violations. See 18 U.S.C. § 1001 and 33 USC § 1319. (Penalties under these statutes may include fines up to $10,000 and/or imprisonment maximum of between 6 months and 5 years.)

SIGNATURE OF PRINCIPAL EXECUTIVE OFFICER OR AUTHORIZED AGENT

TELEPHONE		DATE		
281	575-2824	09	10	07
AREA	NUMBER	YEAR	MO	DAY

COMMENT AND EXPLANATIONS OF ANY VIOLATIONS (Reference all attachments here)

PERMITTEE NAME/ADDRESS (Include Facility Name/Location if different)

NATIONAL POLLUTANT DISCHARGE ELIMINATION SYSTEM (NPDES)
DISCHARGE MONITORING REPORT (DMR)

NAME: CITY OF HOUSTON
ADDRESS: 4545 GROVEWAY
HOUSTON TX 77087-1122

FACILITY: KINGWOOD WEST WWTP
LOCATION: HUMBLE, TX 77339

PERMIT NUMBER: TX0088501
DISCHARGE NUMBER: 001 A

MINOR

M - INTERIM I
DOMESTIC FACILITY - 001 EFFLUENT

☐ Check here if No Discharge

MONITORING PERIOD	YEAR	MO	DAY		YEAR	MO	DAY
FROM	08	03	01	TO	08	03	31

NOTE: Read instructions before completing this form.

PARAMETER		QUANTITY OR LOADING			QUALITY OR CONCENTRATION				NO. EX	FREQUENCY OF ANALYSIS	SAMPLE TYPE
		AVERAGE	MAXIMUM	UNITS	MINIMUM	AVERAGE	MAXIMUM	UNITS			
OXYGEN, DISSOLVED (DO) 00300 1 0 0 EFFLUENT GROSS VALUE	SAMPLE MEASUREMENT	******	******		6.9	******	******		0	WEEKLY	GRAB
	PERMIT REQUIREMENT	******	******	**** ****	6.0 MO MIN	******	******	(19) MG/L		WEEKLY	GRAB
PH 00400 1 0 0 EFFLUENT GROSS VALUE	SAMPLE MEASUREMENT	******	******		7.5	******	7.6		0	WEEKLY	GRAB
	PERMIT REQUIREMENT	******	******	**** ****	6.0 MINIMUM	******	9.0 MAXIMUM	(12) SU		ONCE/ MONTH	GRAB
SOLIDS, TOTAL SUSPENDED 00530 1 0 0 EFFLUENT GROSS VALUE	SAMPLE MEASUREMENT	6	******		******	3	5		0	WEEKLY	COMPOS
	PERMIT REQUIREMENT	47 DAILY AV	******	(26) LBS/DY	******	15 DAILY AV	60 SINGGRAB	(19) MG/L		WEEKLY	GRAB
NITROGEN, AMMONIA TOTAL (AS N) 00610 1 0 0 EFFLUENT GROSS VALUE	SAMPLE MEASUREMENT	0.2	******		******	0.1	0.2		0	WEEKLY	COMPOS
	PERMIT REQUIREMENT	9.5 DAILY AV	******	(26) LBS/DY	******	3 DAILY AV	15 SINGGRAB	(19) MG/L		WEEKLY	GRAB
FLOW, IN CONDUIT OR THRU TREATMENT PLANT 50050 1 0 0 EFFLUENT GROSS VALUE	SAMPLE MEASUREMENT	0.291	0.386		******	******	******		0	CONTIN UOUS	TOTAL2
	PERMIT REQUIREMENT	0.378 DAILY AV	REPORT DAILY MX	(03) MGD	******	******	******	**** ****		WEEK-DAYS	INSTAN
CHLORINE, TOTAL RESIDUAL 50060 1 0 0 EFFLUENT GROSS VALUE	SAMPLE MEASUREMENT	******	******		1.1	******	2.9		0	DAILY	GRAB
	PERMIT REQUIREMENT	******	******	**** ****	1.0 MO MIN	******	4.0 MO MAX	(19) MG/L		WEEK-DAYS	GRAB
E. COLI 51040 1 0 0 EFFLUENT GROSS VALUE	SAMPLE MEASUREMENT	******	******		******				0	WEEKLY	GRAB
	PERMIT REQUIREMENT	******	******	**** ****	******	126 DAILY AV	394 SINGGRAB	(3Z) C/100ML		WEEKLY	GRAB

NAME/TITLE PRINCIPAL EXECUTIVE OFFICER

JUN CHANG
DEPUTY DIRECTOR

TYPED OR PRINTED

I certify under penalty of law that this document and all attachments were prepared under my direction or supervision in accordance with a system designed to assure that qualified personnel properly gather and evaluate the information submitted. Based on my inquiry of the person or persons who manage the system, or those persons directly responsible for gathering the information, the information submitted is, to the best of my knowledge and belief, true, accurate and complete. I am aware that there are significant penalties for submitting false information, including the possibility of fine and imprisonment for knowing violations. See 18 U.S.C. § 1001 and 33 USC § 1319. (Penalties under these statutes may include fines up to $10,000 and/or maximum imprisonment of between 6 months and 5 years.)

SIGNATURE OF PRINCIPAL EXECUTIVE OFFICER OR AUTHORIZED AGENT

TELEPHONE		DATE		
AREA	NUMBER	YEAR	MO	DAY
281	575-2824	09	10	07

COMMENT AND EXPLANATIONS OF ANY VIOLATIONS (Reference all attachments here)

PERMITTEE NAME/ADDRESS (Include Facility Name/Location if different)

NATIONAL POLLUTANT DISCHARGE ELIMINATION SYSTEM (NPDES)
DISCHARGE MONITORING REPORT (DMR)

NAME: CITY OF HOUSTON
ADDRESS: 4545 GROVEWAY
HOUSTON, TX 77087-1122

FACILITY: KINGWOOD WEST WWTP
LOCATION: HUMBLE, TX 77339

TX0088501 — PERMIT NUMBER
001 A — DISCHARGE NUMBER

MINOR
M - INTERIM I
DOMESTIC FACILITY - 001 EFFLUENT

☐ Check here if No Discharge

MONITORING PERIOD	YEAR	MO	DAY		YEAR	MO	DAY
FROM	08	03	01	TO	08	03	31

NOTE: Read instructions before completing this form.

PARAMETER		QUANTITY OR LOADING			QUALITY OR CONCENTRATION				NO. EX	FREQUENCY OF ANALYSIS	SAMPLE TYPE
		AVERAGE	MAXIMUM	UNITS	MINIMUM	AVERAGE	MAXIMUM	UNITS			
BOD, CARBONACEOUS 05 DAY, 20C 80082 1 0 0 EFFLUENT GROSS VALUE	SAMPLE MEASUREMENT	2	******		******	1	1		0	ONCE/ WEEK	COMPOS
	PERMIT REQUIREMENT	32 DAILY AVG	****** ******	(26) LBS/DY	***** *****	10 DAILY AVG	35 SINGLEGRAB	(19) MG/L		ONCE/ WEEK	GRAB
	SAMPLE MEASUREMENT										
	PERMIT REQUIREMENT										
	SAMPLE MEASUREMENT										
	PERMIT REQUIREMENT										
	SAMPLE MEASUREMENT										
	PERMIT REQUIREMENT										
	SAMPLE MEASUREMENT										
	PERMIT REQUIREMENT										
	SAMPLE MEASUREMENT										
	PERMIT REQUIREMENT										
	SAMPLE MEASUREMENT										
	PERMIT REQUIREMENT										

NAME/TITLE PRINCIPAL EXECUTIVE OFFICER

JUN CHANG
DEPUTY DIRECTOR

TYPED OR PRINTED

I certify under penalty of law that this document and all attachments were prepared under my direction or supervision in accordance with a system designed to assure that qualified personnel properly gather and evaluate the information submitted. Based on my inquiry of the person or persons who manage the system, or those persons directly responsible for gathering the information, the information submitted is, to the best of my knowledge and belief, true, accurate and complete. I am aware that there are significant penalties for submitting false information, including the possibility of fine and imprisonment for knowing violations. See 18 U.S.C. § 1001 and 33 USC § 1319. (Penalties under these statutes may include fines up to $10,000 and or maximum imprisonment of between 6 months and 5 years.)

SIGNATURE OF PRINCIPAL EXECUTIVE OFFICER OR AUTHORIZED AGENT

TELEPHONE		DATE		
281	575-2824	09	10	07
AREA	NUMBER	YEAR	MO	DAY

COMMENT AND EXPLANATIONS OF ANY VIOLATIONS (Reference all attachments here)

PERMITTEE NAME/ADDRESS (Include Facility Name/Location if different)

NATIONAL POLLUTANT DISCHARGE ELIMINATION SYSTEM (NPDES)
DISCHARGE MONITORING REPORT (DMR)

NAME CITY OF HOUSTON
ADDRESS 4545 GROVEWAY
HOUSTON TX 77087-1122

FACILITY KINGWOOD WEST WWTP
LOCATION HUMBLE, TX 77339

TX0088501 — PERMIT NUMBER
001 A — DISCHARGE NUMBER

MINOR
M - INTERIM I
DOMESTIC FACILITY - 001 EFFLUENT

MONITORING PERIOD

FROM YEAR	MO	DAY	TO YEAR	MO	DAY
08	04	01	08	04	30

☐ Check here if No Discharge

NOTE: Read instructions before completing this form.

PARAMETER		QUANTITY OR LOADING AVERAGE	QUANTITY OR LOADING MAXIMUM	UNITS	QUALITY OR CONCENTRATION MINIMUM	QUALITY OR CONCENTRATION AVERAGE	QUALITY OR CONCENTRATION MAXIMUM	UNITS	NO EX	FREQUENCY OF ANALYSIS	SAMPLE TYPE
OXYGEN, DISSOLVED (DO) 00300 1 0 0 EFFLUENT GROSS VALUE	SAMPLE MEASUREMENT	******	******		7.1	******	******		0	WEEKLY	GRAB
	PERMIT REQUIREMENT	******	******	**** ****	6.0 MO MIN	******	******	(19) MG/L		WEEKLY	GRAB
PH 00400 1 0 0 EFFLUENT GROSS VALUE	SAMPLE MEASUREMENT	******	******		7.4	******	7.6		0	WEEKLY	GRAB
	PERMIT REQUIREMENT	******	******	**** ****	6.0 MINIMUM	******	9.0 MAXIMUM	(12) SU		ONCE/ MONTH	GRAB
SOLIDS, TOTAL SUSPENDED 00530 1 0 0 EFFLUENT GROSS VALUE	SAMPLE MEASUREMENT	7	******		******	3	9		0	WEEKLY	COMPOS
	PERMIT REQUIREMENT	47 DAILY AV	******	(26) LBS/DY	******	15 DAILY AV	60 SINGGRAB	(19) MG/L		WEEKLY	GRAB
NITROGEN, AMMONIA TOTAL (AS N) 00610 1 0 0 EFFLUENT GROSS VALUE	SAMPLE MEASUREMENT	0.8	******		******	0.4	1.5		0	WEEKLY	COMPOS
	PERMIT REQUIREMENT	9.5 DAILY AV	******	(26) LBS/DY	******	3 DAILY AV	15 SINGGRAB	(19) MG/L		WEEKLY	GRAB
FLOW, IN CONDUIT OR THRU TREATMENT PLANT 50050 1 0 0 EFFLUENT GROSS VALUE	SAMPLE MEASUREMENT	0.289	0.357		******	******	******		0	CONTIN UOUS	TOTALZ
	PERMIT REQUIREMENT	0.378 DAILY AV	REPORT DAILY MX	(03) MGD	******	******	******	**** ****		WEEK-DAYS	INSTAN
CHLORINE, TOTAL RESIDUAL 50060 1 0 0 EFFLUENT GROSS VALUE	SAMPLE MEASUREMENT	******	******		1.0	******	2.8		0	DAILY	GRAB
	PERMIT REQUIREMENT	******	******	**** ****	1.0 MO MIN	******	4.0 MO MAX	(19) MG/L		WEEK-DAYS	GRAB
E. COLI 51040 1 0 0 EFFLUENT GROSS VALUE	SAMPLE MEASUREMENT	******	******		******				0	WEEKLY	GRAB
	PERMIT REQUIREMENT	******	******	**** ****	******	126 DAILY AV	394 SINGGRAB	(3Z) C/100ML		WEEKLY	GRAB

NAME/TITLE PRINCIPAL EXECUTIVE OFFICER

JUN CHANG
DEPUTY DIRECTOR

TYPED OR PRINTED

I certify under penalty of law that this document and all attachments were prepared under my direction or supervision in accordance with a system designed to assure that qualified personnel properly gather and evaluate the information submitted. Based on my inquiry of the person or persons who manage the system, or those persons directly responsible for gathering the information, the information submitted is, to the best of my knowledge and belief, true, accurate and complete. I am aware that there are significant penalties for submitting false information, including the possibility of fine and imprisonment for knowing violations. See 18 U.S.C. § 1001 and 33 USC § 1319. (Penalties under these statutes may include fines up to $10,000 and/or maximum imprisonment of between 6 months and 5 years.)

SIGNATURE OF PRINCIPAL EXECUTIVE OFFICER OR AUTHORIZED AGENT

TELEPHONE AREA	NUMBER	DATE YEAR	MO	DAY
281	575-2824	09	10	07

COMMENT AND EXPLANATIONS OF ANY VIOLATIONS (Reference all attachments here)

PERMITTEE NAME/ADDRESS (Include Facility Name/Location if different)

NATIONAL POLLUTANT DISCHARGE ELIMINATION SYSTEM (NPDES)
DISCHARGE MONITORING REPORT (DMR)

NAME: CITY OF HOUSTON
ADDRESS: 4545 GROVEWAY
HOUSTON, TX 77087-1122

FACILITY: KINGWOOD WEST WWTP
LOCATION: HUMBLE, TX 77339

PERMIT NUMBER: TX0088501
DISCHARGE NUMBER: 001 A

MINOR

M - INTERIM I
DOMESTIC FACILITY - 001 EFFLUENT

☐ Check here if No Discharge

MONITORING PERIOD

	YEAR	MO	DAY		YEAR	MO	DAY
FROM	08	04	01	TO	08	04	30

NOTE: Read instructions before completing this form.

PARAMETER		QUANTITY OR LOADING			QUALITY OR CONCENTRATION				NO. EX	FREQUENCY OF ANALYSIS	SAMPLE TYPE
		AVERAGE	MAXIMUM	UNITS	MINIMUM	AVERAGE	MAXIMUM	UNITS			
BOD, CARBONACEOUS 05 DAY, 20C 80082 1 0 0 EFFLUENT GROSS VALUE	SAMPLE MEASUREMENT	5	******		******	2	5		0	ONCE/ WEEK	COMPOS
	PERMIT REQUIREMENT	32 DAILY AVG	****** ******	(26) LBS/DY	***** *****	10 DAILY AVG	35 SINGLEGRAB	(19) MG/L		ONCE/ WEEK	GRAB
	SAMPLE MEASUREMENT										
	PERMIT REQUIREMENT										
	SAMPLE MEASUREMENT										
	PERMIT REQUIREMENT										
	SAMPLE MEASUREMENT										
	PERMIT REQUIREMENT										
	SAMPLE MEASUREMENT										
	PERMIT REQUIREMENT										
	SAMPLE MEASUREMENT										
	PERMIT REQUIREMENT										
	SAMPLE MEASUREMENT										
	PERMIT REQUIREMENT										

NAME/TITLE PRINCIPAL EXECUTIVE OFFICER

JUN CHANG
DEPUTY DIRECTOR

TYPED OR PRINTED

I certify under penalty of law that this document and all attachments were prepared under my direction or supervision in accordance with a system designed to assure that qualified personnel properly gather and evaluate the information submitted. Based on my inquiry of the person or persons who manage the system, or those persons directly responsible for gathering the information, the information submitted is, to the best of my knowledge and belief, true, accurate and complete. I am aware that there are significant penalties for submitting false information, including the possibility of fine and imprisonment for knowing violations. See 18 U.S.C. § 1001 and 33 USC § 1319. (Penalties under these statutes may include fines up to $10,000 and/or maximum imprisonment of between 6 months and 5 years.)

SIGNATURE OF PRINCIPAL EXECUTIVE OFFICER OR AUTHORIZED AGENT

TELEPHONE		DATE		
281	575-2824	09	10	07
AREA	NUMBER	YEAR	MO	DAY

COMMENT AND EXPLANATIONS OF ANY VIOLATIONS (Reference all attachments here)

PERMITTEE NAME/ADDRESS (Include Facility Name/Location if different)

NATIONAL POLLUTANT DISCHARGE ELIMINATION SYSTEM (NPDES)
DISCHARGE MONITORING REPORT (DMR)

NAME CITY OF HOUSTON
ADDRESS 4545 GROVEWAY
HOUSTON TX 77087-1122

FACILITY KINGWOOD WEST WWTP
LOCATION HUMBLE, TX 77339

PERMIT NUMBER: TX0088501
DISCHARGE NUMBER: 001 A

MINOR

M - INTERIM I
DOMESTIC FACILITY - 001 EFFLUENT

☐ Check here if No Discharge

MONITORING PERIOD	YEAR	MO	DAY		YEAR	MO	DAY
FROM	08	05	01	TO	08	05	31

NOTE: Read instructions before completing this form.

PARAMETER		QUANTITY OR LOADING AVERAGE	QUANTITY OR LOADING MAXIMUM	QUANTITY OR LOADING UNITS	QUALITY OR CONCENTRATION MINIMUM	QUALITY OR CONCENTRATION AVERAGE	QUALITY OR CONCENTRATION MAXIMUM	QUALITY OR CONCENTRATION UNITS	NO. EX	FREQUENCY OF ANALYSIS	SAMPLE TYPE
OXYGEN, DISSOLVED (DO) 00300 1 0 0 EFFLUENT GROSS VALUE	SAMPLE MEASUREMENT	******	******		7.3	******	******		0	WEEKLY	GRAB
	PERMIT REQUIREMENT	******	******	**** ****	6.0 MO MIN	******	******	(19) MG/L		WEEKLY	GRAB
PH 00400 1 0 0 EFFLUENT GROSS VALUE	SAMPLE MEASUREMENT	******	******		7.2	******	7.5		0	WEEKLY	GRAB
	PERMIT REQUIREMENT	******	******	**** ****	6.0 MINIMUM	******	9.0 MAXIMUM	(12) SU		ONCE/ MONTH	GRAB
SOLIDS, TOTAL SUSPENDED 00530 1 0 0 EFFLUENT GROSS VALUE	SAMPLE MEASUREMENT	7	******		******	3	3		0	WEEKLY	COMPOS
	PERMIT REQUIREMENT	47 DAILY AV	******	(26) LBS/DY	******	15 DAILY AV	60 SINGGRAB	(19) MG/L		WEEKLY	GRAB
NITROGEN, AMMONIA TOTAL (AS N) 00610 1 0 0 EFFLUENT GROSS VALUE	SAMPLE MEASUREMENT	0.4	******		******	0.2	0.3		0	WEEKLY	COMPOS
	PERMIT REQUIREMENT	9.5 DAILY AV	******	(26) LBS/DY	******	3 DAILY AV	15 SINGGRAB	(19) MG/L		WEEKLY	GRAB
FLOW, IN CONDUIT OR THRU TREATMENT PLANT 50050 1 0 0 EFFLUENT GROSS VALUE	SAMPLE MEASUREMENT	0.294	0.523		******	******	******		0	CONTIN UOUS	TOTALZ
	PERMIT REQUIREMENT	0.378 DAILY AV	REPORT DAILY MX	(03) MGD	******	******	******	**** ****		WEEK-DAYS	INSTAN
CHLORINE, TOTAL RESIDUAL 50060 1 0 0 EFFLUENT GROSS VALUE	SAMPLE MEASUREMENT	******	******		1.1	******	2.7		0	DAILY	GRAB
	PERMIT REQUIREMENT	******	******	**** ****	1.0 MO MIN	******	4.0 MO MAX	(19) MG/L		WEEK-DAYS	GRAB
E. COLI 51040 1 0 0 EFFLUENT GROSS VALUE	SAMPLE MEASUREMENT	******	******		******				0	WEEKLY	GRAB
	PERMIT REQUIREMENT	******	******	**** ****	******	126 DAILY AV	394 SINGGRAB	(3Z) C/100ML		WEEKLY	GRAB

NAME/TITLE PRINCIPAL EXECUTIVE OFFICER

JUN CHANG
DEPUTY DIRECTOR

TYPED OR PRINTED

I certify under penalty of law that this document and all attachments were prepared under my direction or supervision in accordance with a system designed to assure that qualified personnel properly gather and evaluate the information submitted. Based on my inquiry of the person or persons who manage the system, or those persons directly responsible for gathering the information, the information submitted is, to the best of my knowledge and belief, true, accurate and complete. I am aware that there are significant penalties for submitting false information, including the possibility of fine and imprisonment for knowing violations. See 18 U.S.C. § 1001 and 33 USC § 1319. (Penalties under these statutes may include fines up to $10,000 and or maximum imprisonment of between 6 months and 5 years.)

SIGNATURE OF PRINCIPAL EXECUTIVE OFFICER OR AUTHORIZED AGENT

TELEPHONE AREA	TELEPHONE NUMBER	DATE YEAR	DATE MO	DATE DAY
281	575-2824	09	10	07

COMMENT AND EXPLANATIONS OF ANY VIOLATIONS (Reference all attachments here)

PERMITTEE NAME/ADDRESS (Include Facility Name/Location if different)

NATIONAL POLLUTANT DISCHARGE ELIMINATION SYSTEM (NPDES)
DISCHARGE MONITORING REPORT (DMR)

NAME: CITY OF HOUSTON
ADDRESS: 4545 GROVEWAY
HOUSTON, TX 77087-1122

FACILITY: KINGWOOD WEST WWTP
LOCATION: HUMBLE, TX 77339

PERMIT NUMBER: TX0088501
DISCHARGE NUMBER: 001 A

MINOR
M - INTERIM I
DOMESTIC FACILITY - 001 EFFLUENT

☐ Check here if No Discharge

MONITORING PERIOD	YEAR	MO	DAY		YEAR	MO	DAY
FROM	08	05	01	TO	08	05	31

NOTE: Read instructions before completing this form.

PARAMETER		QUANTITY OR LOADING			QUALITY OR CONCENTRATION				NO. EX	FREQUENCY OF ANALYSIS	SAMPLE TYPE
		AVERAGE	MAXIMUM	UNITS	MINIMUM	AVERAGE	MAXIMUM	UNITS			
BOD, CARBONACEOUS 05 DAY, 20C 80082 1 0 0 EFFLUENT GROSS VALUE	SAMPLE MEASUREMENT	6	******		******	2	4		0	ONCE/ WEEK	COMPOS
	PERMIT REQUIREMENT	32 DAILY AVG	****** ******	(26) LBS/DY	***** *****	10 DAILY AVG	35 SINGLEGRAB	(19) MG/L		ONCE/ WEEK	GRAB
	SAMPLE MEASUREMENT										
	PERMIT REQUIREMENT										
	SAMPLE MEASUREMENT										
	PERMIT REQUIREMENT										
	SAMPLE MEASUREMENT										
	PERMIT REQUIREMENT										
	SAMPLE MEASUREMENT										
	PERMIT REQUIREMENT										
	SAMPLE MEASUREMENT										
	PERMIT REQUIREMENT										
	SAMPLE MEASUREMENT										
	PERMIT REQUIREMENT										

NAME/TITLE PRINCIPAL EXECUTIVE OFFICER

JUN CHANG
DEPUTY DIRECTOR

TYPED OR PRINTED

I certify under penalty of law that this document and all attachments were prepared under my direction or supervision in accordance with a system designed to assure that qualified personnel properly gather and evaluate the information submitted. Based on my inquiry of the person or persons who manage the system, or those persons directly responsible for gathering the information, the information submitted is, to the best of my knowledge and belief, true, accurate and complete. I am aware that there are significant penalties for submitting false information, including the possibility of fine and imprisonment for knowing violations. See 18 U.S.C. § 1001 and 33 USC § 1319. (Penalties under these statutes may include fines up to $10,000 and/or imprisonment of between 6 months and 5 years.)

SIGNATURE OF PRINCIPAL EXECUTIVE OFFICER OR AUTHORIZED AGENT

TELEPHONE		DATE		
281	575-2824	09	10	07
AREA	NUMBER	YEAR	MO	DAY

COMMENT AND EXPLANATIONS OF ANY VIOLATIONS (Reference all attachments here)

PERMITTEE NAME/ADDRESS (Include Facility Name/Location if different)

NATIONAL POLLUTANT DISCHARGE ELIMINATION SYSTEM (NPDES)
DISCHARGE MONITORING REPORT (DMR)

NAME CITY OF HOUSTON
ADDRESS 4545 GROVEWAY
HOUSTON TX 77087-1122

FACILITY KINGWOOD WEST WWTP
LOCATION HUMBLE, TX 77339

TX0088501 — PERMIT NUMBER
001 A — DISCHARGE NUMBER

MINOR

M - INTERIM I
DOMESTIC FACILITY - 001 EFFLUENT

MONITORING PERIOD

	YEAR	MO	DAY		YEAR	MO	DAY
FROM	08	06	01	TO	08	06	30

☐ Check here if No Discharge

NOTE: Read instructions before completing this form.

PARAMETER		QUANTITY OR LOADING			QUALITY OR CONCENTRATION				NO. EX	FREQUENCY OF ANALYSIS	SAMPLE TYPE
		AVERAGE	MAXIMUM	UNITS	MINIMUM	AVERAGE	MAXIMUM	UNITS			
OXYGEN, DISSOLVED (DO) 00300 1 0 0 EFFLUENT GROSS VALUE	SAMPLE MEASUREMENT	******	******		7.2	******	******		0	WEEKLY	GRAB
	PERMIT REQUIREMENT	******	******	**** ****	6.0 MO MIN	******	******	(19) MG/L		WEEKLY	GRAB
PH 00400 1 0 0 EFFLUENT GROSS VALUE	SAMPLE MEASUREMENT	******	******		7.2	******	7.5		0	WEEKLY	GRAB
	PERMIT REQUIREMENT	******	******	**** ****	6.0 MINIMUM	******	9.0 MAXIMUM	(12) SU		ONCE/ MONTH	GRAB
SOLIDS, TOTAL SUSPENDED 00530 1 0 0 EFFLUENT GROSS VALUE	SAMPLE MEASUREMENT	7	******		******	3	3		0	WEEKLY	COMPOS
	PERMIT REQUIREMENT	47 DAILY AV	******	(26) LBS/DY	******	15 DAILY AV	60 SINGGRAB	(19) MG/L		WEEKLY	GRAB
NITROGEN, AMMONIA TOTAL (AS N) 00610 1 0 0 EFFLUENT GROSS VALUE	SAMPLE MEASUREMENT	0.3	******		******	0.1	0.2		0	WEEKLY	COMPOS
	PERMIT REQUIREMENT	9.5 DAILY AV	******	(26) LBS/DY	******	3 DAILY AV	15 SINGGRAB	(19) MG/L		WEEKLY	GRAB
FLOW, IN CONDUIT OR THRU TREATMENT PLANT 50050 1 0 0 EFFLUENT GROSS VALUE	SAMPLE MEASUREMENT	0.293	0.407		******	******	******		0	CONTIN UOUS	TOTALZ
	PERMIT REQUIREMENT	0.378 DAILY AV	REPORT DAILY MX	(03) MGD	******	******	******	**** ****		WEEK-DAYS	INSTAN
CHLORINE, TOTAL RESIDUAL 50060 1 0 0 EFFLUENT GROSS VALUE	SAMPLE MEASUREMENT	******	******		1.2	******	2.5		0	DAILY	GRAB
	PERMIT REQUIREMENT	******	******	**** ****	1.0 MO MIN	******	4.0 MO MAX	(19) MG/L		WEEK-DAYS	GRAB
E. COLI 51040 1 0 0 EFFLUENT GROSS VALUE	SAMPLE MEASUREMENT	******	******		******				0	WEEKLY	GRAB
	PERMIT REQUIREMENT	******	******	**** ****	******	126 DAILY AV	394 SINGGRAB	(3Z) C/100ML		WEEKLY	GRAB

NAME/TITLE PRINCIPAL EXECUTIVE OFFICER

JUN CHANG
DEPUTY DIRECTOR

TYPED OR PRINTED

I certify under penalty of law that this document and all attachments were prepared under my direction or supervision in accordance with a system designed to assure that qualified personnel properly gather and evaluate the information submitted. Based on my inquiry of the person or persons who manage the system, or those persons directly responsible for gathering the information, the information submitted is, to the best of my knowledge and belief, true, accurate and complete. I am aware that there are significant penalties for submitting false information, including the possibility of fine and imprisonment for knowing violations. See 18 U.S.C. § 1001 and 33 USC § 1319. (Penalties under these statutes may include fines up to $10,000 and or maximum imprisonment of between 6 months and 5 years.)

SIGNATURE OF PRINCIPAL EXECUTIVE OFFICER OR AUTHORIZED AGENT

TELEPHONE		DATE		
281	575-2824	09	10	07
AREA	NUMBER	YEAR	MO	DAY

COMMENT AND EXPLANATIONS OF ANY VIOLATIONS (Reference all attachments here)

PERMITTEE NAME/ADDRESS (Include Facility Name/Location if different)

NATIONAL POLLUTANT DISCHARGE ELIMINATION SYSTEM (NPDES)
DISCHARGE MONITORING REPORT (DMR)

NAME: CITY OF HOUSTON
ADDRESS: 4545 GROVEWAY
HOUSTON, TX 77087-1122

FACILITY: KINGWOOD WEST WWTP
LOCATION: HUMBLE, TX 77339

PERMIT NUMBER: TX0088501
DISCHARGE NUMBER: 001 A

MINOR

M - INTERIM I
DOMESTIC FACILITY - 001 EFFLUENT

☐ Check here if No Discharge

MONITORING PERIOD	YEAR	MO	DAY		YEAR	MO	DAY
FROM	08	06	01	TO	08	06	30

NOTE: Read instructions before completing this form.

PARAMETER		QUANTITY OR LOADING			QUALITY OR CONCENTRATION				NO. EX	FREQUENCY OF ANALYSIS	SAMPLE TYPE
		AVERAGE	MAXIMUM	UNITS	MINIMUM	AVERAGE	MAXIMUM	UNITS			
BOD, CARBONACEOUS 05 DAY, 20C 80082 1 0 0 EFFLUENT GROSS VALUE	SAMPLE MEASUREMENT	5	******		******	2	4		0	ONCE/ WEEK	COMPOS
	PERMIT REQUIREMENT	32 DAILY AVG	****** ******	(26) LBS/DY	***** *****	10 DAILY AVG	35 SINGLEGRAB	(19) MG/L		ONCE/ WEEK	GRAB
	SAMPLE MEASUREMENT										
	PERMIT REQUIREMENT										
	SAMPLE MEASUREMENT										
	PERMIT REQUIREMENT										
	SAMPLE MEASUREMENT										
	PERMIT REQUIREMENT										
	SAMPLE MEASUREMENT										
	PERMIT REQUIREMENT										
	SAMPLE MEASUREMENT										
	PERMIT REQUIREMENT										
	SAMPLE MEASUREMENT										
	PERMIT REQUIREMENT										

NAME/TITLE PRINCIPAL EXECUTIVE OFFICER

JUN CHANG
DEPUTY DIRECTOR

TYPED OR PRINTED

I certify under penalty of law that this document and all attachments were prepared under my direction or supervision in accordance with a system designed to assure that qualified personnel properly gather and evaluate the information submitted. Based on my inquiry of the person or persons who manage the system, or those persons directly responsible for gathering the information, the information submitted is, to the best of my knowledge and belief, true, accurate and complete. I am aware that there are significant penalties for submitting false information, including the possibility of fine and imprisonment for knowing violations. See 18 U.S.C. § 1001 and 33 USC § 1319. (Penalties under these statutes may include fines up to $10,000 and/or imprisonment of between 6 months and 5 years.)

SIGNATURE OF PRINCIPAL EXECUTIVE OFFICER OR AUTHORIZED AGENT

TELEPHONE		DATE		
AREA	NUMBER	YEAR	MO	DAY
281	575-2824	09	10	07

COMMENT AND EXPLANATIONS OF ANY VIOLATIONS (Reference all attachments here)

PERMITTEE NAME/ADDRESS (Include Facility Name/Location if different)

NATIONAL POLLUTANT DISCHARGE ELIMINATION SYSTEM (NPDES)
DISCHARGE MONITORING REPORT (DMR)

NAME CITY OF HOUSTON
ADDRESS 4545 GROVEWAY
HOUSTON TX 77087-1122

FACILITY KINGWOOD WEST WWTP
LOCATION HUMBLE, TX 77339

PERMIT NUMBER: TX0088501
DISCHARGE NUMBER: 001 A

MINOR
M - INTERIM I
DOMESTIC FACILITY - 001 EFFLUENT

☐ Check here if No Discharge

MONITORING PERIOD	YEAR	MO	DAY	TO	YEAR	MO	DAY
FROM	08	07	01		08	07	31

NOTE: Read instructions before completing this form.

PARAMETER		QUANTITY OR LOADING AVERAGE	QUANTITY OR LOADING MAXIMUM	QUANTITY OR LOADING UNITS	QUALITY OR CONCENTRATION MINIMUM	QUALITY OR CONCENTRATION AVERAGE	QUALITY OR CONCENTRATION MAXIMUM	QUALITY OR CONCENTRATION UNITS	NO EX	FREQUENCY OF ANALYSIS	SAMPLE TYPE
OXYGEN, DISSOLVED (DO) 00300 1 0 0 EFFLUENT GROSS VALUE	SAMPLE MEASUREMENT	******	******		7.0	******	******		0	WEEKLY	GRAB
	PERMIT REQUIREMENT	******	******	**** ****	6.0 MO MIN	******	******	(19) MG/L		WEEKLY	GRAB
PH 00400 1 0 0 EFFLUENT GROSS VALUE	SAMPLE MEASUREMENT	******	******		7.2	******	7.7		0	WEEKLY	GRAB
	PERMIT REQUIREMENT	******	******	**** ****	6.0 MINIMUM	******	9.0 MAXIMUM	(12) SU		ONCE/ MONTH	GRAB
SOLIDS, TOTAL SUSPENDED 00530 1 0 0 EFFLUENT GROSS VALUE	SAMPLE MEASUREMENT	6	******		******	2	3		0	WEEKLY	COMPOS
	PERMIT REQUIREMENT	47 DAILY AV	******	(26) LBS/DY	******	15 DAILY AV	60 SINGGRAB	(19) MG/L		WEEKLY	GRAB
NITROGEN, AMMONIA TOTAL (AS N) 00610 1 0 0 EFFLUENT GROSS VALUE	SAMPLE MEASUREMENT	0.7	******		******	0.3	1.0		0	WEEKLY	COMPOS
	PERMIT REQUIREMENT	9.5 DAILY AV	******	(26) LBS/DY	******	3 DAILY AV	15 SINGGRAB	(19) MG/L		WEEKLY	GRAB
FLOW, IN CONDUIT OR THRU TREATMENT PLANT 50050 1 0 0 EFFLUENT GROSS VALUE	SAMPLE MEASUREMENT	0.290	0.357		******	******	******		0	CONTIN UOUS	TOTALZ
	PERMIT REQUIREMENT	0.378 DAILY AV	REPORT DAILY MX	(03) MGD	******	******	******	**** ****		WEEK-DAYS	INSTAN
CHLORINE, TOTAL RESIDUAL 50060 1 0 0 EFFLUENT GROSS VALUE	SAMPLE MEASUREMENT	******	******		1.0	******	2.4		0	DAILY	GRAB
	PERMIT REQUIREMENT	******	******	**** ****	1.0 MO MIN	******	4.0 MO MAX	(19) MG/L		WEEK-DAYS	GRAB
E. COLI 51040 1 0 0 EFFLUENT GROSS VALUE	SAMPLE MEASUREMENT	******	******		******				0	WEEKLY	GRAB
	PERMIT REQUIREMENT	******	******	**** ****	******	126 DAILY AV	394 SINGGRAB	(3Z) C/100ML		WEEKLY	GRAB

NAME/TITLE PRINCIPAL EXECUTIVE OFFICER

JUN CHANG
DEPUTY DIRECTOR

TYPED OR PRINTED

I certify under penalty of law that this document and all attachments were prepared under my direction or supervision in accordance with a system designed to assure that qualified personnel properly gather and evaluate the information submitted. Based on my inquiry of the person or persons who manage the system, or those persons directly responsible for gathering the information, the information submitted is, to the best of my knowledge and belief, true, accurate and complete. I am aware that there are significant penalties for submitting false information, including the possibility of fine and imprisonment for knowing violations. See 18 U.S.C. § 1001 and 33 USC § 1319. (Penalties under these statutes may include fines up to $10,000 and or, maximum imprisonment of between 6 months and 5 years.)

SIGNATURE OF PRINCIPAL EXECUTIVE OFFICER OR AUTHORIZED AGENT

TELEPHONE AREA	TELEPHONE NUMBER	DATE YEAR	DATE MO	DATE DAY
281	575-2824	09	10	07

COMMENT AND EXPLANATIONS OF ANY VIOLATIONS (Reference all attachments here)

PERMITTEE NAME/ADDRESS (Include Facility Name/Location if different)

NATIONAL POLLUTANT DISCHARGE ELIMINATION SYSTEM (NPDES)
DISCHARGE MONITORING REPORT (DMR)

NAME: CITY OF HOUSTON
ADDRESS: 4545 GROVEWAY
HOUSTON, TX 77087-1122

FACILITY: KINGWOOD WEST WWTP
LOCATION: HUMBLE, TX 77339

PERMIT NUMBER: TX0088501

DISCHARGE NUMBER: 001 A

MINOR

M - INTERIM I
DOMESTIC FACILITY - 001 EFFLUENT

☐ Check here if No Discharge

MONITORING PERIOD	YEAR	MO	DAY		YEAR	MO	DAY
FROM	08	07	01	TO	08	07	31

NOTE: Read instructions before completing this form.

PARAMETER		QUANTITY OR LOADING			QUALITY OR CONCENTRATION				NO. EX	FREQUENCY OF ANALYSIS	SAMPLE TYPE
		AVERAGE	MAXIMUM	UNITS	MINIMUM	AVERAGE	MAXIMUM	UNITS			
BOD, CARBONACEOUS 05 DAY, 20C 80082 1 0 0 EFFLUENT GROSS VALUE	SAMPLE MEASUREMENT	7	******		******	3	7		0	ONCE/ WEEK	COMPOS
	PERMIT REQUIREMENT	32 DAILY AVG	****** ******	(26) LBS/DY	***** *****	10 DAILY AVG	35 SINGLEGRAB	(19) MG/L		ONCE/ WEEK	GRAB
	SAMPLE MEASUREMENT										
	PERMIT REQUIREMENT										
	SAMPLE MEASUREMENT										
	PERMIT REQUIREMENT										
	SAMPLE MEASUREMENT										
	PERMIT REQUIREMENT										
	SAMPLE MEASUREMENT										
	PERMIT REQUIREMENT										
	SAMPLE MEASUREMENT										
	PERMIT REQUIREMENT										
	SAMPLE MEASUREMENT										
	PERMIT REQUIREMENT										

NAME/TITLE PRINCIPAL EXECUTIVE OFFICER

JUN CHANG
DEPUTY DIRECTOR

TYPED OR PRINTED

I certify under penalty of law that this document and all attachments were prepared under my direction or supervision in accordance with a system designed to assure that qualified personnel properly gather and evaluate the information submitted. Based on my inquiry of the person or persons who manage the system, or those persons directly responsible for gathering the information, the information submitted is, to the best of my knowledge and belief, true, accurate and complete. I am aware that there are significant penalties for submitting false information, including the possibility of fine and imprisonment for knowing violations. See 18 U.S.C. § 1001 and 33 USC § 1319. (Penalties under these statutes may include fines up to $10,000 and/or maximum imprisonment of between 6 months and 5 years.)

SIGNATURE OF PRINCIPAL EXECUTIVE OFFICER OR AUTHORIZED AGENT

TELEPHONE		DATE		
281	575-2824	09	10	07
AREA	NUMBER	YEAR	MO	DAY

COMMENT AND EXPLANATIONS OF ANY VIOLATIONS (Reference all attachments here)

PERMITTEE NAME/ADDRESS (Include Facility Name/Location if different)

NATIONAL POLLUTANT DISCHARGE ELIMINATION SYSTEM (NPDES)
DISCHARGE MONITORING REPORT (DMR)

NAME: CITY OF HOUSTON
ADDRESS: 4545 GROVEWAY
HOUSTON TX 77087-1122

FACILITY: KINGWOOD WEST WWTP
LOCATION: HUMBLE, TX 77339

PERMIT NUMBER: TX0088501
DISCHARGE NUMBER: 001 A

MINOR
M - INTERIM I
DOMESTIC FACILITY - 001 EFFLUENT

☐ Check here if No Discharge

MONITORING PERIOD	YEAR	MO	DAY		YEAR	MO	DAY
FROM	08	08	01	TO	08	08	31

NOTE: Read instructions before completing this form.

PARAMETER		QUANTITY OR LOADING AVERAGE	QUANTITY OR LOADING MAXIMUM	QUANTITY OR LOADING UNITS	QUALITY OR CONCENTRATION MINIMUM	QUALITY OR CONCENTRATION AVERAGE	QUALITY OR CONCENTRATION MAXIMUM	QUALITY OR CONCENTRATION UNITS	NO. EX	FREQUENCY OF ANALYSIS	SAMPLE TYPE
OXYGEN, DISSOLVED (DO) 00300 1 0 0 EFFLUENT GROSS VALUE	SAMPLE MEASUREMENT	******	******		7.0	******	******		0	WEEKLY	GRAB
	PERMIT REQUIREMENT	******	******	**** ****	6.0 MO MIN	******	******	(19) MG/L		WEEKLY	GRAB
PH 00400 1 0 0 EFFLUENT GROSS VALUE	SAMPLE MEASUREMENT	******	******		7.3	******	7.5		0	WEEKLY	GRAB
	PERMIT REQUIREMENT	******	******	**** ****	6.0 MINIMUM	******	9.0 MAXIMUM	(12) SU		ONCE/ MONTH	GRAB
SOLIDS, TOTAL SUSPENDED 00530 1 0 0 EFFLUENT GROSS VALUE	SAMPLE MEASUREMENT	7	******		******	3	4		0	WEEKLY	COMPOS
	PERMIT REQUIREMENT	47 DAILY AV	******	(26) LBS/DY	******	15 DAILY AV	60 SINGGRAB	(19) MG/L		WEEKLY	GRAB
NITROGEN, AMMONIA TOTAL (AS N) 00610 1 0 0 EFFLUENT GROSS VALUE	SAMPLE MEASUREMENT	2.2	******		******	0.8	2.8		0	WEEKLY	COMPOS
	PERMIT REQUIREMENT	9.5 DAILY AV	******	(26) LBS/DY	******	3 DAILY AV	15 SINGGRAB	(19) MG/L		WEEKLY	GRAB
FLOW, IN CONDUIT OR THRU TREATMENT PLANT 50050 1 0 0 EFFLUENT GROSS VALUE	SAMPLE MEASUREMENT	0.307	0.404		******	******	******		0	CONTIN UOUS	TOTALZ
	PERMIT REQUIREMENT	0.378 DAILY AV	REPORT DAILY MX	(03) MGD	******	******	******	**** ****		WEEK-DAYS	INSTAN
CHLORINE, TOTAL RESIDUAL 50060 1 0 0 EFFLUENT GROSS VALUE	SAMPLE MEASUREMENT	******	******		1.1	******	2.2		0	DAILY	GRAB
	PERMIT REQUIREMENT	******	******	**** ****	1.0 MO MIN	******	4.0 MO MAX	(19) MG/L		WEEK-DAYS	GRAB
E. COLI 51040 1 0 0 EFFLUENT GROSS VALUE	SAMPLE MEASUREMENT	******	******		******				0	WEEKLY	GRAB
	PERMIT REQUIREMENT	******	******	**** ****	******	126 DAILY AV	394 SINGGRAB	(3Z) C/100ML		WEEKLY	GRAB

NAME/TITLE PRINCIPAL EXECUTIVE OFFICER

JUN CHANG
DEPUTY DIRECTOR

TYPED OR PRINTED

I certify under penalty of law that this document and all attachments were prepared under my direction or supervision in accordance with a system designed to assure that qualified personnel properly gather and evaluate the information submitted. Based on my inquiry of the person or persons who manage the system, or those persons directly responsible for gathering the information, the information submitted is, to the best of my knowledge and belief, true, accurate and complete. I am aware that there are significant penalties for submitting false information, including the possibility of fine and imprisonment for knowing violations. See 18 U.S.C. § 1001 and 33 USC § 1319. (Penalties under these statutes may include fines up to $10,000 and/or maximum imprisonment of between 6 months and 5 years.)

SIGNATURE OF PRINCIPAL EXECUTIVE OFFICER OR AUTHORIZED AGENT

TELEPHONE AREA	TELEPHONE NUMBER	DATE YEAR	DATE MO	DATE DAY
281	575-2824	09	10	07

COMMENT AND EXPLANATIONS OF ANY VIOLATIONS (Reference all attachments here)

PERMITTEE NAME/ADDRESS (Include Facility Name/Location if different)

NATIONAL POLLUTANT DISCHARGE ELIMINATION SYSTEM (NPDES)
DISCHARGE MONITORING REPORT (DMR)

NAME: CITY OF HOUSTON
ADDRESS: 4545 GROVEWAY
HOUSTON, TX 77087-1122

FACILITY: KINGWOOD WEST WWTP
LOCATION: HUMBLE, TX 77339

PERMIT NUMBER: TX0088501
DISCHARGE NUMBER: 001 A

MINOR
M - INTERIM I
DOMESTIC FACILITY - 001 EFFLUENT

☐ Check here if No Discharge

MONITORING PERIOD	YEAR	MO	DAY		YEAR	MO	DAY
FROM	08	08	01	TO	08	08	31

NOTE: Read instructions before completing this form.

PARAMETER		QUANTITY OR LOADING			QUALITY OR CONCENTRATION				NO. EX	FREQUENCY OF ANALYSIS	SAMPLE TYPE
		AVERAGE	MAXIMUM	UNITS	MINIMUM	AVERAGE	MAXIMUM	UNITS			
BOD, CARBONACEOUS 05 DAY, 20C 80082 1 0 0 EFFLUENT GROSS VALUE	SAMPLE MEASUREMENT	5	******		******	2	3		0	ONCE/ WEEK	COMPOS
	PERMIT REQUIREMENT	32 DAILY AVG	****** ******	(26) LBS/DY	***** *****	10 DAILY AVG	35 SINGLEGRAB	(19) MG/L		ONCE/ WEEK	GRAB
	SAMPLE MEASUREMENT										
	PERMIT REQUIREMENT										
	SAMPLE MEASUREMENT										
	PERMIT REQUIREMENT										
	SAMPLE MEASUREMENT										
	PERMIT REQUIREMENT										
	SAMPLE MEASUREMENT										
	PERMIT REQUIREMENT										
	SAMPLE MEASUREMENT										
	PERMIT REQUIREMENT										
	SAMPLE MEASUREMENT										
	PERMIT REQUIREMENT										

NAME/TITLE PRINCIPAL EXECUTIVE OFFICER

JUN CHANG
DEPUTY DIRECTOR

TYPED OR PRINTED

I certify under penalty of law that this document and all attachments were prepared under my direction or supervision in accordance with a system designed to assure that qualified personnel properly gather and evaluate the information submitted. Based on my inquiry of the person or persons who manage the system, or those persons directly responsible for gathering the information, the information submitted is, to the best of my knowledge and belief, true, accurate and complete. I am aware that there are significant penalties for submitting false information, including the possibility of fine and imprisonment for knowing violations. See 18 U.S.C. § 1001 and 33 USC § 1319. (Penalties under these statutes may include fines up to $10,000 and/or maximum imprisonment of between 6 months and 5 years.)

SIGNATURE OF PRINCIPAL EXECUTIVE OFFICER OR AUTHORIZED AGENT

TELEPHONE		DATE		
281	575-2824	09	10	07
AREA	NUMBER	YEAR	MO	DAY

COMMENT AND EXPLANATIONS OF ANY VIOLATIONS (Reference all attachments here)

PERMITTEE NAME/ADDRESS (Include Facility Name/Location if different)

NATIONAL POLLUTANT DISCHARGE ELIMINATION SYSTEM (NPDES)
DISCHARGE MONITORING REPORT (DMR)

NAME: CITY OF HOUSTON
ADDRESS: 4545 GROVEWAY
HOUSTON TX 77087-1122

FACILITY: KINGWOOD WEST WWTP
LOCATION: HUMBLE, TX 77339

PERMIT NUMBER: TX0088501
DISCHARGE NUMBER: 001 A

MINOR
M - INTERIM I
DOMESTIC FACILITY - 001 EFFLUENT

☐ Check here if No Discharge

MONITORING PERIOD	YEAR	MO	DAY		YEAR	MO	DAY
FROM	08	09	01	TO	08	09	30

NOTE: Read instructions before completing this form.

PARAMETER		QUANTITY OR LOADING AVERAGE	QUANTITY OR LOADING MAXIMUM	QUANTITY OR LOADING UNITS	QUALITY OR CONCENTRATION MINIMUM	QUALITY OR CONCENTRATION AVERAGE	QUALITY OR CONCENTRATION MAXIMUM	QUALITY OR CONCENTRATION UNITS	NO. EX	FREQUENCY OF ANALYSIS	SAMPLE TYPE
OXYGEN, DISSOLVED (DO) 00300 1 0 0 EFFLUENT GROSS VALUE	SAMPLE MEASUREMENT	******	******		7.2	******	******		0	WEEKLY	GRAB
	PERMIT REQUIREMENT	******	******	**** ****	6.0 MO MIN	******	******	(19) MG/L		WEEKLY	GRAB
PH 00400 1 0 0 EFFLUENT GROSS VALUE	SAMPLE MEASUREMENT	******	******		7.2	******	7.6		0	WEEKLY	GRAB
	PERMIT REQUIREMENT	******	******	**** ****	6.0 MINIMUM	******	9.0 MAXIMUM	(12) SU		ONCE/ MONTH	GRAB
SOLIDS, TOTAL SUSPENDED 00530 1 0 0 EFFLUENT GROSS VALUE	SAMPLE MEASUREMENT	9	******		******	3	5		0	WEEKLY	COMPOS
	PERMIT REQUIREMENT	47 DAILY AV	******	(26) LBS/DY	******	15 DAILY AV	60 SINGGRAB	(19) MG/L		WEEKLY	GRAB
NITROGEN, AMMONIA TOTAL (AS N) 00610 1 0 0 EFFLUENT GROSS VALUE	SAMPLE MEASUREMENT	5.9	******		******	2.0	7.0		0	WEEKLY	COMPOS
	PERMIT REQUIREMENT	9.5 DAILY AV	******	(26) LBS/DY	******	3 DAILY AV	15 SINGGRAB	(19) MG/L		WEEKLY	GRAB
FLOW, IN CONDUIT OR THRU TREATMENT PLANT 50050 1 0 0 EFFLUENT GROSS VALUE	SAMPLE MEASUREMENT	0.315	0.556		******	******	******		0	CONTIN UOUS	TOTAL2
	PERMIT REQUIREMENT	0.378 DAILY AV	REPORT DAILY MX	(03) MGD	******	******	******	**** ****		WEEK-DAYS	INSTAN
CHLORINE, TOTAL RESIDUAL 50060 1 0 0 EFFLUENT GROSS VALUE	SAMPLE MEASUREMENT	******	******		1.1	******	3.7		0	DAILY	GRAB
	PERMIT REQUIREMENT	******	******	**** ****	1.0 MO MIN	******	4.0 MO MAX	(19) MG/L		WEEK-DAYS	GRAB
E. COLI 51040 1 0 0 EFFLUENT GROSS VALUE	SAMPLE MEASUREMENT	******	******		******		16		0	WEEKLY	GRAB
	PERMIT REQUIREMENT	******	******	**** ****	******	126 DAILY AV	394 SINGGRAB	(3Z) C/100ML		WEEKLY	GRAB

NAME/TITLE PRINCIPAL EXECUTIVE OFFICER

JUN CHANG
DEPUTY DIRECTOR

TYPED OR PRINTED

I certify under penalty of law that this document and all attachments were prepared under my direction or supervision in accordance with a system designed to assure that qualified personnel properly gather and evaluate the information submitted. Based on my inquiry of the person or persons who manage the system, or those persons directly responsible for gathering the information, the information submitted is, to the best of my knowledge and belief, true, accurate and complete. I am aware that there are significant penalties for submitting false information, including the possibility of fine and imprisonment for knowing violations. See 18 U.S.C. § 1001 and 33 USC § 1319. (Penalties under these statutes may include fines up to $10,000 and/or maximum imprisonment of between 6 months and 5 years.)

SIGNATURE OF PRINCIPAL EXECUTIVE OFFICER OR AUTHORIZED AGENT

TELEPHONE AREA	TELEPHONE NUMBER	DATE YEAR	DATE MO	DATE DAY
281	575-2824	09	10	07

COMMENT AND EXPLANATIONS OF ANY VIOLATIONS (Reference all attachments here)

PERMITTEE NAME/ADDRESS (Include Facility Name/Location if different)

NATIONAL POLLUTANT DISCHARGE ELIMINATION SYSTEM (NPDES)
DISCHARGE MONITORING REPORT (DMR)

NAME: CITY OF HOUSTON
ADDRESS: 4545 GROVEWAY
HOUSTON, TX 77087-1122

FACILITY: KINGWOOD WEST WWTP
LOCATION: HUMBLE, TX 77339

PERMIT NUMBER: TX0088501
DISCHARGE NUMBER: 001 A

MINOR

M - INTERIM I
DOMESTIC FACILITY - 001 EFFLUENT

☐ Check here if No Discharge

MONITORING PERIOD	YEAR	MO	DAY		YEAR	MO	DAY
FROM	08	09	01	TO	08	09	30

NOTE: Read instructions before completing this form.

PARAMETER		QUANTITY OR LOADING			QUALITY OR CONCENTRATION				NO. EX	FREQUENCY OF ANALYSIS	SAMPLE TYPE
		AVERAGE	MAXIMUM	UNITS	MINIMUM	AVERAGE	MAXIMUM	UNITS			
BOD, CARBONACEOUS 05 DAY, 20C 80082 1 0 0 EFFLUENT GROSS VALUE	SAMPLE MEASUREMENT	6	******		******	2	4		0	ONCE/ WEEK	COMPOS
	PERMIT REQUIREMENT	32 DAILY AVG	****** ******	(26) LBS/DY	***** *****	10 DAILY AVG	35 SINGLEGRAB	(19) MG/L		ONCE/ WEEK	GRAB
	SAMPLE MEASUREMENT										
	PERMIT REQUIREMENT										
	SAMPLE MEASUREMENT										
	PERMIT REQUIREMENT										
	SAMPLE MEASUREMENT										
	PERMIT REQUIREMENT										
	SAMPLE MEASUREMENT										
	PERMIT REQUIREMENT										
	SAMPLE MEASUREMENT										
	PERMIT REQUIREMENT										
	SAMPLE MEASUREMENT										
	PERMIT REQUIREMENT										

NAME/TITLE PRINCIPAL EXECUTIVE OFFICER

JUN CHANG
DEPUTY DIRECTOR

TYPED OR PRINTED

I certify under penalty of law that this document and all attachments were prepared under my direction or supervision in accordance with a system designed to assure that qualified personnel properly gather and evaluate the information submitted. Based on my inquiry of the person or persons who manage the system, or those persons directly responsible for gathering the information, the information submitted is, to the best of my knowledge and belief, true, accurate and complete. I am aware that there are significant penalties for submitting false information, including the possibility of fine and imprisonment for knowing violations. See 18 U.S.C. § 1001 and 33 USC § 1319. (Penalties under these statutes may include fines up to $10,000 and/or maximum imprisonment of between 6 months and 5 years.)

SIGNATURE OF PRINCIPAL EXECUTIVE OFFICER OR AUTHORIZED AGENT

TELEPHONE		DATE		
281	575-2824	09	10	07
AREA	NUMBER	YEAR	MO	DAY

COMMENT AND EXPLANATIONS OF ANY VIOLATIONS (Reference all attachments here)

PERMITTEE NAME/ADDRESS (Include Facility Name/Location if different)

NATIONAL POLLUTANT DISCHARGE ELIMINATION SYSTEM (NPDES)
DISCHARGE MONITORING REPORT (DMR)

NAME: CITY OF HOUSTON
ADDRESS: 4545 GROVEWAY
HOUSTON TX 77087-1122

FACILITY: KINGWOOD WEST WWTP
LOCATION: HUMBLE, TX 77339

PERMIT NUMBER: TX0088501
DISCHARGE NUMBER: 001 A

MINOR
M - INTERIM I
DOMESTIC FACILITY - 001 EFFLUENT

MONITORING PERIOD

	YEAR	MO	DAY		YEAR	MO	DAY
FROM	08	10	01	TO	08	10	31

☐ Check here if No Discharge

NOTE: Read instructions before completing this form.

PARAMETER		QUANTITY OR LOADING			QUALITY OR CONCENTRATION				NO EX	FREQUENCY OF ANALYSIS	SAMPLE TYPE
		AVERAGE	MAXIMUM	UNITS	MINIMUM	AVERAGE	MAXIMUM	UNITS			
OXYGEN, DISSOLVED (DO) 00300 1 0 0 EFFLUENT GROSS VALUE	SAMPLE MEASUREMENT	******	******		6.8	******	******		0	WEEKLY	GRAB
	PERMIT REQUIREMENT	******	******	**** ****	6.0 MO MIN	******	******	(19) MG/L		WEEKLY	GRAB
PH 00400 1 0 0 EFFLUENT GROSS VALUE	SAMPLE MEASUREMENT	******	******		7.0	******	7.5		0	WEEKLY	GRAB
	PERMIT REQUIREMENT	******	******	**** ****	6.0 MINIMUM	******	9.0 MAXIMUM	(12) SU		ONCE/ MONTH	GRAB
SOLIDS, TOTAL SUSPENDED 00530 1 0 0 EFFLUENT GROSS VALUE	SAMPLE MEASUREMENT	21	******		******	6	9		0	WEEKLY	COMPOS
	PERMIT REQUIREMENT	47 DAILY AV	******	(26) LBS/DY	******	15 DAILY AV	60 SINGGRAB	(19) MG/L		WEEKLY	GRAB
NITROGEN, AMMONIA TOTAL (AS N) 00610 1 0 0 EFFLUENT GROSS VALUE	SAMPLE MEASUREMENT	0.4	******		******	0.1	0.2		0	WEEKLY	COMPOS
	PERMIT REQUIREMENT	9.5 DAILY AV	******	(26) LBS/DY	******	3 DAILY AV	15 SINGGRAB	(19) MG/L		WEEKLY	GRAB
FLOW, IN CONDUIT OR THRU TREATMENT PLANT 50050 1 0 0 EFFLUENT GROSS VALUE	SAMPLE MEASUREMENT	0.375	0.590		******	******	******		0	CONTIN UOUS	TOTALZ
	PERMIT REQUIREMENT	0.378 DAILY AV	REPORT DAILY MX	(03) MGD	******	******	******	**** ****		WEEK-DAYS	INSTAN
CHLORINE, TOTAL RESIDUAL 50060 1 0 0 EFFLUENT GROSS VALUE	SAMPLE MEASUREMENT	******	******		1.2	******	3.9		0	DAILY	GRAB
	PERMIT REQUIREMENT	******	******	**** ****	1.0 MO MIN	******	4.0 MO MAX	(19) MG/L		WEEK-DAYS	GRAB
E. COLI 51040 1 0 0 EFFLUENT GROSS VALUE	SAMPLE MEASUREMENT	******	******		******		4		0	WEEKLY	GRAB
	PERMIT REQUIREMENT	******	******	**** ****	******	126 DAILY AV	394 SINGGRAB	(3Z) C/100ML		WEEKLY	GRAB

NAME/TITLE PRINCIPAL EXECUTIVE OFFICER

JUN CHANG
DEPUTY DIRECTOR

TYPED OR PRINTED

I certify under penalty of law that this document and all attachments were prepared under my direction or supervision in accordance with a system designed to assure that qualified personnel properly gather and evaluate the information submitted. Based on my inquiry of the person or persons who manage the system, or those persons directly responsible for gathering the information, the information submitted is, to the best of my knowledge and belief, true, accurate and complete. I am aware that there are significant penalties for submitting false information, including the possibility of fine and imprisonment for knowing violations. See 18 U.S.C. § 1001 and 33 USC § 1319. (Penalties under these statutes may include fines up to $10,000 and/or maximum imprisonment of between 6 months and 5 years.)

SIGNATURE OF PRINCIPAL EXECUTIVE OFFICER OR AUTHORIZED AGENT

TELEPHONE		DATE		
281	575-2824	09	10	07
AREA	NUMBER	YEAR	MO	DAY

COMMENT AND EXPLANATIONS OF ANY VIOLATIONS (Reference all attachments here)

PERMITTEE NAME/ADDRESS (Include Facility Name/Location if different)

NATIONAL POLLUTANT DISCHARGE ELIMINATION SYSTEM (NPDES)
DISCHARGE MONITORING REPORT (DMR)

NAME: CITY OF HOUSTON
ADDRESS: 4545 GROVEWAY
HOUSTON, TX 77087-1122

FACILITY: KINGWOOD WEST WWTP
LOCATION: HUMBLE, TX 77339

PERMIT NUMBER: TX0088501
DISCHARGE NUMBER: 001 A

MINOR
M - INTERIM I
DOMESTIC FACILITY - 001 EFFLUENT

☐ Check here if No Discharge

MONITORING PERIOD	YEAR	MO	DAY		YEAR	MO	DAY
FROM	08	10	01	TO	08	10	31

NOTE: Read instructions before completing this form.

PARAMETER		QUANTITY OR LOADING			QUALITY OR CONCENTRATION				NO. EX	FREQUENCY OF ANALYSIS	SAMPLE TYPE
		AVERAGE	MAXIMUM	UNITS	MINIMUM	AVERAGE	MAXIMUM	UNITS			
BOD, CARBONACEOUS 05 DAY, 20C 80082 1 0 0 EFFLUENT GROSS VALUE	SAMPLE MEASUREMENT	16	******		******	5	8		0	ONCE/ WEEK	COMPOS
	PERMIT REQUIREMENT	32 DAILY AVG	****** ******	(26) LBS/DY	***** *****	10 DAILY AVG	35 SINGLEGRAB	(19) MG/L		ONCE/ WEEK	GRAB
	SAMPLE MEASUREMENT										
	PERMIT REQUIREMENT										
	SAMPLE MEASUREMENT										
	PERMIT REQUIREMENT										
	SAMPLE MEASUREMENT										
	PERMIT REQUIREMENT										
	SAMPLE MEASUREMENT										
	PERMIT REQUIREMENT										
	SAMPLE MEASUREMENT										
	PERMIT REQUIREMENT										
	SAMPLE MEASUREMENT										
	PERMIT REQUIREMENT										

NAME/TITLE PRINCIPAL EXECUTIVE OFFICER

JUN CHANG
DEPUTY DIRECTOR

TYPED OR PRINTED

I certify under penalty of law that this document and all attachments were prepared under my direction or supervision in accordance with a system designed to assure that qualified personnel properly gather and evaluate the information submitted. Based on my inquiry of the person or persons who manage the system, or those persons directly responsible for gathering the information, the information submitted is, to the best of my knowledge and belief, true, accurate and complete. I am aware that there are significant penalties for submitting false information, including the possibility of fine and imprisonment for knowing violations. See 18 U.S.C. § 1001 and 33 USC § 1319. (Penalties under these statutes may include fines up to $10,000 and or maximum imprisonment of between 6 months and 5 years.)

SIGNATURE OF PRINCIPAL EXECUTIVE OFFICER OR AUTHORIZED AGENT

TELEPHONE		DATE		
281	575-2824	09	10	07
AREA	NUMBER	YEAR	MO	DAY

COMMENT AND EXPLANATIONS OF ANY VIOLATIONS (Reference all attachments here)

PERMITTEE NAME/ADDRESS (Include Facility Name/Location if different)

NATIONAL POLLUTANT DISCHARGE ELIMINATION SYSTEM (NPDES)
DISCHARGE MONITORING REPORT (DMR)

NAME CITY OF HOUSTON
ADDRESS 4545 GROVEWAY
HOUSTON TX 77087-1122

FACILITY KINGWOOD WEST WWTP
LOCATION HUMBLE, TX 77339

PERMIT NUMBER: TX0088501
DISCHARGE NUMBER: 001 A

MINOR

M - INTERIM I
DOMESTIC FACILITY - 001 EFFLUENT

MONITORING PERIOD

FROM YEAR	MO	DAY	TO YEAR	MO	DAY
08	11	01	08	11	30

☐ Check here if No Discharge

NOTE: Read instructions before completing this form.

PARAMETER		QUANTITY OR LOADING AVERAGE	QUANTITY OR LOADING MAXIMUM	QUANTITY OR LOADING UNITS	QUALITY OR CONCENTRATION MINIMUM	QUALITY OR CONCENTRATION AVERAGE	QUALITY OR CONCENTRATION MAXIMUM	QUALITY OR CONCENTRATION UNITS	NO. EX	FREQUENCY OF ANALYSIS	SAMPLE TYPE
OXYGEN, DISSOLVED (DO) 00300 1 0 0 EFFLUENT GROSS VALUE	SAMPLE MEASUREMENT	******	******		7.4	******	******		0	WEEKLY	GRAB
	PERMIT REQUIREMENT	******	******	**** ****	6.0 MO MIN	******	******	(19) MG/L		WEEKLY	GRAB
PH 00400 1 0 0 EFFLUENT GROSS VALUE	SAMPLE MEASUREMENT	******	******		7.2	******	7.4		0	WEEKLY	GRAB
	PERMIT REQUIREMENT	******	******	**** ****	6.0 MINIMUM	******	9.0 MAXIMUM	(12) SU		ONCE/ MONTH	GRAB
SOLIDS, TOTAL SUSPENDED 00530 1 0 0 EFFLUENT GROSS VALUE	SAMPLE MEASUREMENT	7	******		******	2	3		0	WEEKLY	COMPOS
	PERMIT REQUIREMENT	47 DAILY AV	******	(26) LBS/DY	******	15 DAILY AV	60 SINGGRAB	(19) MG/L		WEEKLY	GRAB
NITROGEN, AMMONIA TOTAL (AS N) 00610 1 0 0 EFFLUENT GROSS VALUE	SAMPLE MEASUREMENT	0.6	******		******	0.2	0.3		0	WEEKLY	COMPOS
	PERMIT REQUIREMENT	9.5 DAILY AV	******	(26) LBS/DY	******	3 DAILY AV	15 SINGGRAB	(19) MG/L		WEEKLY	GRAB
FLOW, IN CONDUIT OR THRU TREATMENT PLANT 50050 1 0 0 EFFLUENT GROSS VALUE	SAMPLE MEASUREMENT	0.362	0.590		******	******	******		0	CONTIN UOUS	TOTALZ
	PERMIT REQUIREMENT	0.378 DAILY AV	REPORT DAILY MX	(03) MGD	******	******	******	**** ****		WEEK-DAYS	INSTAN
CHLORINE, TOTAL RESIDUAL 50060 1 0 0 EFFLUENT GROSS VALUE	SAMPLE MEASUREMENT	******	******		1.1	******	2.9		0	DAILY	GRAB
	PERMIT REQUIREMENT	******	******	**** ****	1.0 MO MIN	******	4.0 MO MAX	(19) MG/L		WEEK-DAYS	GRAB
E. COLI 51040 1 0 0 EFFLUENT GROSS VALUE	SAMPLE MEASUREMENT	******	******		******		2		0	WEEKLY	GRAB
	PERMIT REQUIREMENT	******	******	**** ****	******	126 DAILY AV	394 SINGGRAB	(32) C/100ML		WEEKLY	GRAB

NAME/TITLE PRINCIPAL EXECUTIVE OFFICER

JUN CHANG
DEPUTY DIRECTOR

TYPED OR PRINTED

I certify under penalty of law that this document and all attachments were prepared under my direction or supervision in accordance with a system designed to assure that qualified personnel properly gather and evaluate the information submitted. Based on my inquiry of the person or persons who manage the system, or those persons directly responsible for gathering the information, the information submitted is, to the best of my knowledge and belief, true, accurate and complete. I am aware that there are significant penalties for submitting false information, including the possibility of fine and imprisonment for knowing violations. See 18 U.S.C. § 1001 and 33 USC § 1319. (Penalties under these statutes may include fines up to $10,000 and/or imprisonment. Imprisonment of between 6 months and 5 years.)

SIGNATURE OF PRINCIPAL EXECUTIVE OFFICER OR AUTHORIZED AGENT

TELEPHONE AREA	NUMBER	DATE YEAR	MO	DAY
281	575-2824	09	10	07

COMMENT AND EXPLANATIONS OF ANY VIOLATIONS (Reference all attachments here)

PERMITTEE NAME/ADDRESS (Include Facility Name/Location if different)

NATIONAL POLLUTANT DISCHARGE ELIMINATION SYSTEM (NPDES)
DISCHARGE MONITORING REPORT (DMR)

NAME: CITY OF HOUSTON
ADDRESS: 4545 GROVEWAY
HOUSTON, TX 77087-1122

FACILITY: KINGWOOD WEST WWTP
LOCATION: HUMBLE, TX 77339

PERMIT NUMBER: TX0088501
DISCHARGE NUMBER: 001 A

MINOR

M - INTERIM I
DOMESTIC FACILITY - 001 EFFLUENT

MONITORING PERIOD

FROM YEAR	MO	DAY	TO YEAR	MO	DAY
08	11	01	08	11	30

☐ Check here if No Discharge

NOTE: Read instructions before completing this form.

PARAMETER		QUANTITY OR LOADING AVERAGE	MAXIMUM	UNITS	QUALITY OR CONCENTRATION MINIMUM	AVERAGE	MAXIMUM	UNITS	NO. EX	FREQUENCY OF ANALYSIS	SAMPLE TYPE
BOD, CARBONACEOUS 05 DAY, 20C 80082 1 0 0 EFFLUENT GROSS VALUE	SAMPLE MEASUREMENT	5	******		******	2	4		0	ONCE/WEEK	COMPOS
	PERMIT REQUIREMENT	32 DAILY AVG	****** ******	(26) LBS/DY	***** *****	10 DAILY AVG	35 SINGLEGRAB	(19) MG/L		ONCE/WEEK	GRAB
	SAMPLE MEASUREMENT										
	PERMIT REQUIREMENT										
	SAMPLE MEASUREMENT										
	PERMIT REQUIREMENT										
	SAMPLE MEASUREMENT										
	PERMIT REQUIREMENT										
	SAMPLE MEASUREMENT										
	PERMIT REQUIREMENT										
	SAMPLE MEASUREMENT										
	PERMIT REQUIREMENT										
	SAMPLE MEASUREMENT										
	PERMIT REQUIREMENT										

NAME/TITLE PRINCIPAL EXECUTIVE OFFICER

JUN CHANG
DEPUTY DIRECTOR

TYPED OR PRINTED

I certify under penalty of law that this document and all attachments were prepared under my direction or supervision in accordance with a system designed to assure that qualified personnel properly gather and evaluate the information submitted. Based on my inquiry of the person or persons who manage the system, or those persons directly responsible for gathering the information, the information submitted is, to the best of my knowledge and belief, true, accurate and complete. I am aware that there are significant penalties for submitting false information, including the possibility of fine and imprisonment for knowing violations. See 18 U.S.C. § 1001 and 33 USC § 1319. (Penalties under these statutes may include fines up to $10,000 and/or maximum imprisonment of between 6 months and 5 years.)

SIGNATURE OF PRINCIPAL EXECUTIVE OFFICER OR AUTHORIZED AGENT

TELEPHONE AREA	NUMBER	DATE YEAR	MO	DAY
281	575-2824	09	10	07

COMMENT AND EXPLANATIONS OF ANY VIOLATIONS (Reference all attachments here)

PERMITTEE NAME/ADDRESS (Include Facility Name/Location if different)

NATIONAL POLLUTANT DISCHARGE ELIMINATION SYSTEM (NPDES)
DISCHARGE MONITORING REPORT (DMR)

NAME: CITY OF HOUSTON
ADDRESS: 4545 GROVEWAY
HOUSTON TX 77087-1122

FACILITY: KINGWOOD WEST WWTP
LOCATION: HUMBLE, TX 77339

PERMIT NUMBER: TX0088501
DISCHARGE NUMBER: 001 A

MINOR
M - INTERIM I
DOMESTIC FACILITY - 001 EFFLUENT

MONITORING PERIOD

FROM YEAR	MO	DAY	TO YEAR	MO	DAY
08	12	01	08	12	31

☐ Check here if No Discharge

NOTE: Read instructions before completing this form.

PARAMETER		QUANTITY OR LOADING AVERAGE	QUANTITY OR LOADING MAXIMUM	QUANTITY OR LOADING UNITS	QUALITY OR CONCENTRATION MINIMUM	QUALITY OR CONCENTRATION AVERAGE	QUALITY OR CONCENTRATION MAXIMUM	QUALITY OR CONCENTRATION UNITS	NO. EX	FREQUENCY OF ANALYSIS	SAMPLE TYPE
OXYGEN, DISSOLVED (DO) 00300 1 0 0 EFFLUENT GROSS VALUE	SAMPLE MEASUREMENT	******	******		7.2	******	******		0	WEEKLY	GRAB
	PERMIT REQUIREMENT	******	******	**** ****	6.0 MO MIN	******	******	(19) MG/L		WEEKLY	GRAB
PH 00400 1 0 0 EFFLUENT GROSS VALUE	SAMPLE MEASUREMENT	******	******		7.1	******	7.5		0	WEEKLY	GRAB
	PERMIT REQUIREMENT	******	******	**** ****	6.0 MINIMUM	******	9.0 MAXIMUM	(12) SU		ONCE/ MONTH	GRAB
SOLIDS, TOTAL SUSPENDED 00530 1 0 0 EFFLUENT GROSS VALUE	SAMPLE MEASUREMENT	26	******		******	8	14		0	WEEKLY	COMPOS
	PERMIT REQUIREMENT	47 DAILY AV	******	(26) LBS/DY	******	15 DAILY AV	60 SINGGRAB	(19) MG/L		WEEKLY	GRAB
NITROGEN, AMMONIA TOTAL (AS N) 00610 1 0 0 EFFLUENT GROSS VALUE	SAMPLE MEASUREMENT	0.5	******		******	0.2	0.3		0	WEEKLY	COMPOS
	PERMIT REQUIREMENT	9.5 DAILY AV	******	(26) LBS/DY	******	3 DAILY AV	15 SINGGRAB	(19) MG/L		WEEKLY	GRAB
FLOW, IN CONDUIT OR THRU TREATMENT PLANT 50050 1 0 0 EFFLUENT GROSS VALUE	SAMPLE MEASUREMENT	0.346	0.447		******	******	******		0	CONTIN UOUS	TOTALZ
	PERMIT REQUIREMENT	0.378 DAILY AV	REPORT DAILY MX	(03) MGD	******	******	******	**** ****		WEEK-DAYS	INSTAN
CHLORINE, TOTAL RESIDUAL 50060 1 0 0 EFFLUENT GROSS VALUE	SAMPLE MEASUREMENT	******	******		1.1	******	3.9		0	DAILY	GRAB
	PERMIT REQUIREMENT	******	******	**** ****	1.0 MO MIN	******	4.0 MO MAX	(19) MG/L		WEEK-DAYS	GRAB
E. COLI 51040 1 0 0 EFFLUENT GROSS VALUE	SAMPLE MEASUREMENT	******	******		******		2		0	WEEKLY	GRAB
	PERMIT REQUIREMENT	******	******	**** ****	******	126 DAILY AV	394 SINGGRAB	(3Z) C/100ML		WEEKLY	GRAB

NAME/TITLE PRINCIPAL EXECUTIVE OFFICER

JUN CHANG
DEPUTY DIRECTOR

TYPED OR PRINTED

I certify under penalty of law that this document and all attachments were prepared under my direction or supervision in accordance with a system designed to assure that qualified personnel properly gather and evaluate the information submitted. Based on my inquiry of the person or persons who manage the system, or those persons directly responsible for gathering the information, the information submitted is, to the best of my knowledge and belief, true, accurate and complete. I am aware that there are significant penalties for submitting false information, including the possibility of fine and imprisonment for knowing violations. See 18 U.S.C. § 1001 and 33 USC § 1319. (Penalties under these statutes may include fines up to $10,000 and/or maximum imprisonment of between 6 months and 5 years.)

SIGNATURE OF PRINCIPAL EXECUTIVE OFFICER OR AUTHORIZED AGENT

TELEPHONE AREA	TELEPHONE NUMBER	DATE YEAR	DATE MO	DATE DAY
281	575-2824	09	10	07

COMMENT AND EXPLANATIONS OF ANY VIOLATIONS (Reference all attachments here)

PERMITTEE NAME/ADDRESS (Include Facility Name/Location if different)

NATIONAL POLLUTANT DISCHARGE ELIMINATION SYSTEM (NPDES)
DISCHARGE MONITORING REPORT (DMR)

NAME CITY OF HOUSTON
ADDRESS 4545 GROVEWAY
HOUSTON, TX 77087-1122

FACILITY KINGWOOD WEST WWTP
LOCATION HUMBLE, TX 77339

TX0088501 — PERMIT NUMBER
001 A — DISCHARGE NUMBER

MINOR

M - INTERIM I
DOMESTIC FACILITY - 001 EFFLUENT

☐ Check here if No Discharge

MONITORING PERIOD						
	YEAR	MO	DAY		YEAR	MO	DAY
FROM	08	12	01	TO	08	12	31

NOTE: Read instructions before completing this form.

PARAMETER		QUANTITY OR LOADING			QUALITY OR CONCENTRATION				NO. EX	FREQUENCY OF ANALYSIS	SAMPLE TYPE
		AVERAGE	MAXIMUM	UNITS	MINIMUM	AVERAGE	MAXIMUM	UNITS			
BOD, CARBONACEOUS 05 DAY, 20C 80082 1 0 0 EFFLUENT GROSS VALUE	SAMPLE MEASUREMENT	5	******		******	2	3		0	ONCE/WEEK	COMPOS
	PERMIT REQUIREMENT	32 DAILY AVG	****** ******	(26) LBS/DY	***** *****	10 DAILY AVG	35 SINGLEGRAB	(19) MG/L		ONCE/WEEK	GRAB
	SAMPLE MEASUREMENT										
	PERMIT REQUIREMENT										
	SAMPLE MEASUREMENT										
	PERMIT REQUIREMENT										
	SAMPLE MEASUREMENT										
	PERMIT REQUIREMENT										
	SAMPLE MEASUREMENT										
	PERMIT REQUIREMENT										
	SAMPLE MEASUREMENT										
	PERMIT REQUIREMENT										
	SAMPLE MEASUREMENT										
	PERMIT REQUIREMENT										

NAME/TITLE PRINCIPAL EXECUTIVE OFFICER

JUN CHANG
DEPUTY DIRECTOR

TYPED OR PRINTED

I certify under penalty of law that this document and all attachments were prepared under my direction or supervision in accordance with a system designed to assure that qualified personnel properly gather and evaluate the information submitted. Based on my inquiry of the person or persons who manage the system, or those persons directly responsible for gathering the information, the information submitted is, to the best of my knowledge and belief, true, accurate and complete. I am aware that there are significant penalties for submitting false information, including the possibility of fine and imprisonment for knowing violations. See 18 U.S.C. § 1001 and 33 USC § 1319. (Penalties under these statutes may include fines up to $10,000 and/or maximum imprisonment of between 6 months and 5 years.)

SIGNATURE OF PRINCIPAL EXECUTIVE OFFICER OR AUTHORIZED AGENT

TELEPHONE		DATE		
AREA	NUMBER	YEAR	MO	DAY
281	575-2824	09	10	07

COMMENT AND EXPLANATIONS OF ANY VIOLATIONS (Reference all attachments here)

PERMITTEE NAME/ADDRESS (Include Facility Name/Location if different)

NATIONAL POLLUTANT DISCHARGE ELIMINATION SYSTEM (NPDES)
DISCHARGE MONITORING REPORT (DMR)

NAME CITY OF HOUSTON
ADDRESS 4545 GROVEWAY
HOUSTON TX 77087-1122

FACILITY KINGWOOD WEST WWTP
LOCATION HUMBLE, TX 77339

PERMIT NUMBER: TX0088501
DISCHARGE NUMBER: 001 A

MINOR

M - INTERIM I
DOMESTIC FACILITY - 001 EFFLUENT

☐ Check here if No Discharge

MONITORING PERIOD	YEAR	MO	DAY	TO	YEAR	MO	DAY
FROM	09	01	01		09	01	31

NOTE: Read instructions before completing this form.

PARAMETER		QUANTITY OR LOADING AVERAGE	QUANTITY OR LOADING MAXIMUM	QUANTITY OR LOADING UNITS	QUALITY OR CONCENTRATION MINIMUM	QUALITY OR CONCENTRATION AVERAGE	QUALITY OR CONCENTRATION MAXIMUM	QUALITY OR CONCENTRATION UNITS	NO. EX	FREQUENCY OF ANALYSIS	SAMPLE TYPE
OXYGEN, DISSOLVED (DO) 00300 1 0 0 EFFLUENT GROSS VALUE	SAMPLE MEASUREMENT	******	******		7.2	******	******		0	WEEKLY	GRAB
	PERMIT REQUIREMENT	******	******	**** ****	6.0 MO MIN	******	******	(19) MG/L		WEEKLY	GRAB
PH 00400 1 0 0 EFFLUENT GROSS VALUE	SAMPLE MEASUREMENT	******	******		7.2	******	7.2		0	WEEKLY	GRAB
	PERMIT REQUIREMENT	******	******	**** ****	6.0 MINIMUM	******	9.0 MAXIMUM	(12) SU		ONCE/ MONTH	GRAB
SOLIDS, TOTAL SUSPENDED 00530 1 0 0 EFFLUENT GROSS VALUE	SAMPLE MEASUREMENT	14	******		******	5	10		0	WEEKLY	COMPOS
	PERMIT REQUIREMENT	47 DAILY AV	******	(26) LBS/DY	******	15 DAILY AV	60 SINGGRAB	(19) MG/L		WEEKLY	GRAB
NITROGEN, AMMONIA TOTAL (AS N) 00610 1 0 0 EFFLUENT GROSS VALUE	SAMPLE MEASUREMENT	0.4	******		******	0.1	0.2		0	WEEKLY	COMPOS
	PERMIT REQUIREMENT	9.5 DAILY AV	******	(26) LBS/DY	******	3 DAILY AV	15 SINGGRAB	(19) MG/L		WEEKLY	GRAB
FLOW, IN CONDUIT OR THRU TREATMENT PLANT 50050 1 0 0 EFFLUENT GROSS VALUE	SAMPLE MEASUREMENT	0.353	0.393		******	******	******		0	CONTIN UOUS	TOTALZ
	PERMIT REQUIREMENT	0.378 DAILY AV	REPORT DAILY MX	(03) MGD	******	******	******	**** ****		WEEK-DAYS	INSTAN
CHLORINE, TOTAL RESIDUAL 50060 1 0 0 EFFLUENT GROSS VALUE	SAMPLE MEASUREMENT	******	******		1.1	******	3.7		0	DAILY	GRAB
	PERMIT REQUIREMENT	******	******	**** ****	1.0 MO MIN	******	4.0 MO MAX	(19) MG/L		WEEK-DAYS	GRAB
E. COLI 51040 1 0 0 EFFLUENT GROSS VALUE	SAMPLE MEASUREMENT	******	******		******		2		0	WEEKLY	GRAB
	PERMIT REQUIREMENT	******	******	**** ****	******	126 DAILY AV	394 SINGGRAB	(3Z) C/100ML		WEEKLY	GRAB

NAME/TITLE PRINCIPAL EXECUTIVE OFFICER

JUN CHANG
DEPUTY DIRECTOR

TYPED OR PRINTED

I certify under penalty of law that this document and all attachments were prepared under my direction or supervision in accordance with a system designed to assure that qualified personnel properly gather and evaluate the information submitted. Based on my inquiry of the person or persons who manage the system, or those persons directly responsible for gathering the information, the information submitted is, to the best of my knowledge and belief, true, accurate and complete. I am aware that there are significant penalties for submitting false information, including the possibility of fine and imprisonment for knowing violations. See 18 U.S.C. § 1001 and 33 USC § 1319. (Penalties under these statutes may include fines up to $10,000 and/or minimum imprisonment of between 6 months and 5 years.)

SIGNATURE OF PRINCIPAL EXECUTIVE OFFICER OR AUTHORIZED AGENT

TELEPHONE AREA	TELEPHONE NUMBER	DATE YEAR	DATE MO	DATE DAY
281	575-2824	09	10	07

COMMENT AND EXPLANATIONS OF ANY VIOLATIONS (Reference all attachments here)

PERMITTEE NAME/ADDRESS (Include Facility Name/Location if different)

NATIONAL POLLUTANT DISCHARGE ELIMINATION SYSTEM (NPDES)
DISCHARGE MONITORING REPORT (DMR)

NAME: CITY OF HOUSTON
ADDRESS: 4545 GROVEWAY
HOUSTON, TX 77087-1122

FACILITY: KINGWOOD WEST WWTP
LOCATION: HUMBLE, TX 77339

PERMIT NUMBER: TX0088501
DISCHARGE NUMBER: 001 A

MINOR

M - INTERIM I
DOMESTIC FACILITY - 001 EFFLUENT

☐ Check here if No Discharge

MONITORING PERIOD	YEAR	MO	DAY		YEAR	MO	DAY
FROM	09	01	01	TO	09	01	31

NOTE: Read instructions before completing this form.

PARAMETER		QUANTITY OR LOADING			QUALITY OR CONCENTRATION				NO. EX	FREQUENCY OF ANALYSIS	SAMPLE TYPE
		AVERAGE	MAXIMUM	UNITS	MINIMUM	AVERAGE	MAXIMUM	UNITS			
BOD, CARBONACEOUS 05 DAY, 20C 80082 1 0 0 EFFLUENT GROSS VALUE	SAMPLE MEASUREMENT	9	******		******	3	7		0	ONCE/WEEK	COMPOS
	PERMIT REQUIREMENT	32 DAILY AVG	****** ******	(26) LBS/DY	***** *****	10 DAILY AVG	35 SINGLEGRAB	(19) MG/L		ONCE/WEEK	GRAB
	SAMPLE MEASUREMENT										
	PERMIT REQUIREMENT										
	SAMPLE MEASUREMENT										
	PERMIT REQUIREMENT										
	SAMPLE MEASUREMENT										
	PERMIT REQUIREMENT										
	SAMPLE MEASUREMENT										
	PERMIT REQUIREMENT										
	SAMPLE MEASUREMENT										
	PERMIT REQUIREMENT										
	SAMPLE MEASUREMENT										
	PERMIT REQUIREMENT										

NAME/TITLE PRINCIPAL EXECUTIVE OFFICER

JUN CHANG
DEPUTY DIRECTOR

TYPED OR PRINTED

I certify under penalty of law that this document and all attachments were prepared under my direction or supervision in accordance with a system designed to assure that qualified personnel properly gather and evaluate the information submitted. Based on my inquiry of the person or persons who manage the system, or those persons directly responsible for gathering the information, the information submitted is, to the best of my knowledge and belief, true, accurate and complete. I am aware that there are significant penalties for submitting false information, including the possibility of fine and imprisonment for knowing violations. See 18 U.S.C. § 1001 and 33 USC § 1319. (Penalties under these statutes may include fines up to $10,000 and or maximum imprisonment of between 6 months and 5 years.)

SIGNATURE OF PRINCIPAL EXECUTIVE OFFICER OR AUTHORIZED AGENT

TELEPHONE		DATE		
281	575-2824	09	10	07
AREA	NUMBER	YEAR	MO	DAY

COMMENT AND EXPLANATIONS OF ANY VIOLATIONS (Reference all attachments here)

PERMITTEE NAME/ADDRESS (Include Facility Name/Location if different)

NATIONAL POLLUTANT DISCHARGE ELIMINATION SYSTEM (NPDES)
DISCHARGE MONITORING REPORT (DMR)

NAME: CITY OF HOUSTON
ADDRESS: 4545 GROVEWAY
HOUSTON TX 77087-1122

FACILITY: KINGWOOD WEST WWTP
LOCATION: HUMBLE, TX 77339

PERMIT NUMBER: TX0088501
DISCHARGE NUMBER: 001 A

MINOR
M - INTERIM I
DOMESTIC FACILITY - 001 EFFLUENT

☐ Check here if No Discharge

MONITORING PERIOD	YEAR	MO	DAY	TO	YEAR	MO	DAY
FROM	09	02	01		09	02	28

NOTE: Read instructions before completing this form.

PARAMETER		QUANTITY OR LOADING AVERAGE	QUANTITY OR LOADING MAXIMUM	QUANTITY OR LOADING UNITS	QUALITY OR CONCENTRATION MINIMUM	QUALITY OR CONCENTRATION AVERAGE	QUALITY OR CONCENTRATION MAXIMUM	QUALITY OR CONCENTRATION UNITS	NO. EX	FREQUENCY OF ANALYSIS	SAMPLE TYPE
OXYGEN, DISSOLVED (DO) 00300 1 0 0 EFFLUENT GROSS VALUE	SAMPLE MEASUREMENT	******	******		7.0	******	******		0	WEEKLY	GRAB
	PERMIT REQUIREMENT	******	******	**** ****	6.0 MO MIN	******	******	(19) MG/L		WEEKLY	GRAB
PH 00400 1 0 0 EFFLUENT GROSS VALUE	SAMPLE MEASUREMENT	******	******		7.1	******	7.3		0	WEEKLY	GRAB
	PERMIT REQUIREMENT	******	******	**** ****	6.0 MINIMUM	******	9.0 MAXIMUM	(12) SU		ONCE/ MONTH	GRAB
SOLIDS, TOTAL SUSPENDED 00530 1 0 0 EFFLUENT GROSS VALUE	SAMPLE MEASUREMENT	21	******		******	7	12		0	WEEKLY	COMPOS
	PERMIT REQUIREMENT	47 DAILY AV	******	(26) LBS/DY	******	15 DAILY AV	60 SINGGRAB	(19) MG/L		WEEKLY	GRAB
NITROGEN, AMMONIA TOTAL (AS N) 00610 1 0 0 EFFLUENT GROSS VALUE	SAMPLE MEASUREMENT	0.6	******		******	0.2	0.5		0	WEEKLY	COMPOS
	PERMIT REQUIREMENT	9.5 DAILY AV	******	(26) LBS/DY	******	3 DAILY AV	15 SINGGRAB	(19) MG/L		WEEKLY	GRAB
FLOW, IN CONDUIT OR THRU TREATMENT PLANT 50050 1 0 0 EFFLUENT GROSS VALUE	SAMPLE MEASUREMENT	0.365	0.493		******	******	******		0	CONTIN UOUS	TOTALZ
	PERMIT REQUIREMENT	0.378 DAILY AV	REPORT DAILY MX	(03) MGD	******	******	******	**** ****		WEEK-DAYS	INSTAN
CHLORINE, TOTAL RESIDUAL 50060 1 0 0 EFFLUENT GROSS VALUE	SAMPLE MEASUREMENT	******	******		1.0	******	3.2		0	DAILY	GRAB
	PERMIT REQUIREMENT	******	******	**** ****	1.0 MO MIN	******	4.0 MO MAX	(19) MG/L		WEEK-DAYS	GRAB
E. COLI 51040 1 0 0 EFFLUENT GROSS VALUE	SAMPLE MEASUREMENT	******	******		******		5		0	WEEKLY	GRAB
	PERMIT REQUIREMENT	******	******	**** ****	******	126 DAILY AV	394 SINGGRAB	(3Z) C/100ML		WEEKLY	GRAB

NAME/TITLE PRINCIPAL EXECUTIVE OFFICER

JUN CHANG
DEPUTY DIRECTOR

TYPED OR PRINTED

I certify under penalty of law that this document and all attachments were prepared under my direction or supervision in accordance with a system designed to assure that qualified personnel properly gather and evaluate the information submitted. Based on my inquiry of the person or persons who manage the system, or those persons directly responsible for gathering the information, the information submitted is, to the best of my knowledge and belief, true, accurate and complete. I am aware that there are significant penalties for submitting false information, including the possibility of fine and imprisonment for knowing violations. See 18 U.S.C. § 1001 and 33 USC § 1319. (Penalties under these statutes may include fines up to $10,000 and/or maximum imprisonment of between 6 months and 5 years.)

SIGNATURE OF PRINCIPAL EXECUTIVE OFFICER OR AUTHORIZED AGENT

TELEPHONE AREA	TELEPHONE NUMBER	DATE YEAR	DATE MO	DATE DAY
281	575-2824	09	10	07

COMMENT AND EXPLANATIONS OF ANY VIOLATIONS (Reference all attachments here)

PERMITTEE NAME/ADDRESS (Include Facility Name/Location if different)

NATIONAL POLLUTANT DISCHARGE ELIMINATION SYSTEM (NPDES)
DISCHARGE MONITORING REPORT (DMR)

NAME: CITY OF HOUSTON
ADDRESS: 4545 GROVEWAY
HOUSTON, TX 77087-1122

FACILITY: KINGWOOD WEST WWTP
LOCATION: HUMBLE, TX 77339

PERMIT NUMBER: TX0088501
DISCHARGE NUMBER: 001 A

MINOR

M - INTERIM I
DOMESTIC FACILITY - 001 EFFLUENT

☐ Check here if No Discharge

MONITORING PERIOD

	YEAR	MO	DAY		YEAR	MO	DAY
FROM	09	02	01	TO	09	02	28

NOTE: Read instructions before completing this form.

PARAMETER		QUANTITY OR LOADING			QUALITY OR CONCENTRATION				NO. EX	FREQUENCY OF ANALYSIS	SAMPLE TYPE
		AVERAGE	MAXIMUM	UNITS	MINIMUM	AVERAGE	MAXIMUM	UNITS			
BOD, CARBONACEOUS 05 DAY, 20C 80082 1 0 0 EFFLUENT GROSS VALUE	SAMPLE MEASUREMENT	8	******		******	3	5		0	ONCE/ WEEK	COMPOS
	PERMIT REQUIREMENT	32 DAILY AVG	****** ******	(26) LBS/DY	***** *****	10 DAILY AVG	35 SINGLEGRAB	(19) MG/L		ONCE/ WEEK	GRAB
	SAMPLE MEASUREMENT										
	PERMIT REQUIREMENT										
	SAMPLE MEASUREMENT										
	PERMIT REQUIREMENT										
	SAMPLE MEASUREMENT										
	PERMIT REQUIREMENT										
	SAMPLE MEASUREMENT										
	PERMIT REQUIREMENT										
	SAMPLE MEASUREMENT										
	PERMIT REQUIREMENT										
	SAMPLE MEASUREMENT										
	PERMIT REQUIREMENT										

NAME/TITLE PRINCIPAL EXECUTIVE OFFICER

JUN CHANG
DEPUTY DIRECTOR

TYPED OR PRINTED

I certify under penalty of law that this document and all attachments were prepared under my direction or supervision in accordance with a system designed to assure that qualified personnel properly gather and evaluate the information submitted. Based on my inquiry of the person or persons who manage the system, or those persons directly responsible for gathering the information, the information submitted is, to the best of my knowledge and belief, true, accurate and complete. I am aware that there are significant penalties for submitting false information, including the possibility of fine and imprisonment for knowing violations. See 18 U.S.C. § 1001 and 33 USC § 1319. (Penalties under these statutes may include fines up to $10,000 and/or maximum imprisonment of between 6 months and 5 years.)

SIGNATURE OF PRINCIPAL EXECUTIVE OFFICER OR AUTHORIZED AGENT

TELEPHONE		DATE		
AREA	NUMBER	YEAR	MO	DAY
281	575-2824	09	10	07

COMMENT AND EXPLANATIONS OF ANY VIOLATIONS (Reference all attachments here)

PERMITTEE NAME/ADDRESS (Include Facility Name/Location if different)

NATIONAL POLLUTANT DISCHARGE ELIMINATION SYSTEM (NPDES)
DISCHARGE MONITORING REPORT (DMR)

NAME: CITY OF HOUSTON
ADDRESS: 4545 GROVEWAY
HOUSTON TX 77087-1122

FACILITY: KINGWOOD WEST WWTP
LOCATION: HUMBLE, TX 77339

PERMIT NUMBER: TX0088501
DISCHARGE NUMBER: 001 A

MINOR
M - INTERIM I
DOMESTIC FACILITY - 001 EFFLUENT

☐ Check here if No Discharge

MONITORING PERIOD	YEAR	MO	DAY		YEAR	MO	DAY
FROM	09	03	01	TO	09	03	31

NOTE: Read instructions before completing this form.

PARAMETER		QUANTITY OR LOADING AVERAGE	QUANTITY OR LOADING MAXIMUM	QUANTITY OR LOADING UNITS	QUALITY OR CONCENTRATION MINIMUM	QUALITY OR CONCENTRATION AVERAGE	QUALITY OR CONCENTRATION MAXIMUM	QUALITY OR CONCENTRATION UNITS	NO. EX	FREQUENCY OF ANALYSIS	SAMPLE TYPE
OXYGEN, DISSOLVED (DO) 00300 1 0 0 EFFLUENT GROSS VALUE	SAMPLE MEASUREMENT	******	******		7.2	******	******		0	WEEKLY	GRAB
	PERMIT REQUIREMENT	******	******	**** ****	6.0 MO MIN	******	******	(19) MG/L		WEEKLY	GRAB
PH 00400 1 0 0 EFFLUENT GROSS VALUE	SAMPLE MEASUREMENT	******	******		7.2	******	7.4		0	WEEKLY	GRAB
	PERMIT REQUIREMENT	******	******	**** ****	6.0 MINIMUM	******	9.0 MAXIMUM	(12) SU		ONCE/ MONTH	GRAB
SOLIDS, TOTAL SUSPENDED 00530 1 0 0 EFFLUENT GROSS VALUE	SAMPLE MEASUREMENT	9	******		******	3	7		0	WEEKLY	COMPOS
	PERMIT REQUIREMENT	47 DAILY AV	******	(26) LBS/DY	******	15 DAILY AV	60 SINGGRAB	(19) MG/L		WEEKLY	GRAB
NITROGEN, AMMONIA TOTAL (AS N) 00610 1 0 0 EFFLUENT GROSS VALUE	SAMPLE MEASUREMENT	0.5	******		******	0.2	0.3		0	WEEKLY	COMPOS
	PERMIT REQUIREMENT	9.5 DAILY AV	******	(26) LBS/DY	******	3 DAILY AV	15 SINGGRAB	(19) MG/L		WEEKLY	GRAB
FLOW, IN CONDUIT OR THRU TREATMENT PLANT 50050 1 0 0 EFFLUENT GROSS VALUE	SAMPLE MEASUREMENT	0.360	0.467		******	******	******		0	CONTIN UOUS	TOTALZ
	PERMIT REQUIREMENT	0.378 DAILY AV	REPORT DAILY MX	(03) MGD	******	******	******	**** ****		WEEK-DAYS	INSTAN
CHLORINE, TOTAL RESIDUAL 50060 1 0 0 EFFLUENT GROSS VALUE	SAMPLE MEASUREMENT	******	******		1.3	******	3.8		0	DAILY	GRAB
	PERMIT REQUIREMENT	******	******	**** ****	1.0 MO MIN	******	4.0 MO MAX	(19) MG/L		WEEK-DAYS	GRAB
E. COLI 51040 1 0 0 EFFLUENT GROSS VALUE	SAMPLE MEASUREMENT	******	******		******		1		0	WEEKLY	GRAB
	PERMIT REQUIREMENT	******	******	**** ****	******	126 DAILY AV	394 SINGGRAB	(3Z) C/100ML		WEEKLY	GRAB

NAME/TITLE PRINCIPAL EXECUTIVE OFFICER

JUN CHANG
DEPUTY DIRECTOR

TYPED OR PRINTED

I certify under penalty of law that this document and all attachments were prepared under my direction or supervision in accordance with a system designed to assure that qualified personnel properly gather and evaluate the information submitted. Based on my inquiry of the person or persons who manage the system, or those persons directly responsible for gathering the information, the information submitted is, to the best of my knowledge and belief, true, accurate and complete. I am aware that there are significant penalties for submitting false information, including the possibility of fine and imprisonment for knowing violations. See 18 U.S.C. § 1001 and 33 USC § 1319. (Penalties under these statutes may include fines up to $10,000 and/or maximum imprisonment of between 6 months and 5 years.)

SIGNATURE OF PRINCIPAL EXECUTIVE OFFICER OR AUTHORIZED AGENT

TELEPHONE AREA	TELEPHONE NUMBER	DATE YEAR	DATE MO	DATE DAY
281	575-2824	09	10	07

COMMENT AND EXPLANATIONS OF ANY VIOLATIONS (Reference all attachments here)

PERMITTEE NAME/ADDRESS (Include Facility Name/Location if different)

NATIONAL POLLUTANT DISCHARGE ELIMINATION SYSTEM (NPDES)
DISCHARGE MONITORING REPORT (DMR)

NAME: CITY OF HOUSTON
ADDRESS: 4545 GROVEWAY
HOUSTON, TX 77087-1122

FACILITY: KINGWOOD WEST WWTP
LOCATION: HUMBLE, TX 77339

PERMIT NUMBER: TX0088501
DISCHARGE NUMBER: 001 A

MINOR
M - INTERIM I
DOMESTIC FACILITY - 001 EFFLUENT

☐ Check here if No Discharge

MONITORING PERIOD	YEAR	MO	DAY		YEAR	MO	DAY
FROM	09	03	01	TO	09	03	31

NOTE: Read instructions before completing this form.

PARAMETER		QUANTITY OR LOADING			QUALITY OR CONCENTRATION				NO. EX	FREQUENCY OF ANALYSIS	SAMPLE TYPE
		AVERAGE	MAXIMUM	UNITS	MINIMUM	AVERAGE	MAXIMUM	UNITS			
BOD, CARBONACEOUS 05 DAY, 20C 80082 1 0 0 EFFLUENT GROSS VALUE	SAMPLE MEASUREMENT	7	******		******	3	6		0	ONCE/ WEEK	COMPOS
	PERMIT REQUIREMENT	32 DAILY AVG	****** ******	(26) LBS/DY	***** *****	10 DAILY AVG	35 SINGLEGRAB	(19) MG/L		ONCE/ WEEK	GRAB
	SAMPLE MEASUREMENT										
	PERMIT REQUIREMENT										
	SAMPLE MEASUREMENT										
	PERMIT REQUIREMENT										
	SAMPLE MEASUREMENT										
	PERMIT REQUIREMENT										
	SAMPLE MEASUREMENT										
	PERMIT REQUIREMENT										
	SAMPLE MEASUREMENT										
	PERMIT REQUIREMENT										
	SAMPLE MEASUREMENT										
	PERMIT REQUIREMENT										

NAME/TITLE PRINCIPAL EXECUTIVE OFFICER

JUN CHANG
DEPUTY DIRECTOR

TYPED OR PRINTED

I certify under penalty of law that this document and all attachments were prepared under my direction or supervision in accordance with a system designed to assure that qualified personnel properly gather and evaluate the information submitted. Based on my inquiry of the person or persons who manage the system, or those persons directly responsible for gathering the information, the information submitted is, to the best of my knowledge and belief, true, accurate and complete. I am aware that there are significant penalties for submitting false information, including the possibility of fine and imprisonment for knowing violations. See 18 U.S.C. § 1001 and 33 USC § 1319. (Penalties under these statutes may include fines up to $10,000 and or maximum imprisonment of between 5 months and 5 years.)

SIGNATURE OF PRINCIPAL EXECUTIVE OFFICER OR AUTHORIZED AGENT

TELEPHONE		DATE		
281	575-2824	09	10	07
AREA	NUMBER	YEAR	MO	DAY

COMMENT AND EXPLANATIONS OF ANY VIOLATIONS (Reference all attachments here)

PERMITTEE NAME/ADDRESS (Include Facility Name/Location if different)

NATIONAL POLLUTANT DISCHARGE ELIMINATION SYSTEM (NPDES)
DISCHARGE MONITORING REPORT (DMR)

NAME: CITY OF HOUSTON
ADDRESS: 4545 GROVEWAY
HOUSTON TX 77087-1122

FACILITY: KINGWOOD WEST WWTP
LOCATION: HUMBLE, TX 77339

PERMIT NUMBER: TX0088501
DISCHARGE NUMBER: 001 A

MINOR
M - INTERIM I
DOMESTIC FACILITY - 001 EFFLUENT

MONITORING PERIOD

FROM YEAR	MO	DAY	TO YEAR	MO	DAY
09	04	01	09	04	30

☐ Check here if No Discharge

NOTE: Read instructions before completing this form.

PARAMETER		QUANTITY OR LOADING AVERAGE	QUANTITY OR LOADING MAXIMUM	QUANTITY OR LOADING UNITS	QUALITY OR CONCENTRATION MINIMUM	QUALITY OR CONCENTRATION AVERAGE	QUALITY OR CONCENTRATION MAXIMUM	QUALITY OR CONCENTRATION UNITS	NO. EX	FREQUENCY OF ANALYSIS	SAMPLE TYPE
OXYGEN, DISSOLVED (DO) 00300 1 0 0 EFFLUENT GROSS VALUE	SAMPLE MEASUREMENT	******	******		7.2	******	******		0	WEEKLY	GRAB
	PERMIT REQUIREMENT	******	******	**** ****	6.0 MO MIN	******	******	(19) MG/L		WEEKLY	GRAB
PH 00400 1 0 0 EFFLUENT GROSS VALUE	SAMPLE MEASUREMENT	******	******		7.1	******	7.3		0	WEEKLY	GRAB
	PERMIT REQUIREMENT	******	******	**** ****	6.0 MINIMUM	******	9.0 MAXIMUM	(12) SU		ONCE/ MONTH	GRAB
SOLIDS, TOTAL SUSPENDED 00530 1 0 0 EFFLUENT GROSS VALUE	SAMPLE MEASUREMENT	14	******		******	4	8		0	WEEKLY	COMPOS
	PERMIT REQUIREMENT	47 DAILY AV	******	(26) LBS/DY	******	15 DAILY AV	60 SINGGRAB	(19) MG/L		WEEKLY	GRAB
NITROGEN, AMMONIA TOTAL (AS N) 00610 1 0 0 EFFLUENT GROSS VALUE	SAMPLE MEASUREMENT	0.4	******		******	0.1	0.2		0	WEEKLY	COMPOS
	PERMIT REQUIREMENT	9.5 DAILY AV	******	(26) LBS/DY	******	3 DAILY AV	15 SINGGRAB	(19) MG/L		WEEKLY	GRAB
FLOW, IN CONDUIT OR THRU TREATMENT PLANT 50050 1 0 0 EFFLUENT GROSS VALUE	SAMPLE MEASUREMENT	0.389	0.718		******	******	******		1	CONTIN UOUS	TOTALZ
	PERMIT REQUIREMENT	0.378 DAILY AV	REPORT DAILY MX	(03) MGD	******	******	******	**** ****		WEEK-DAYS	INSTAN
CHLORINE, TOTAL RESIDUAL 50060 1 0 0 EFFLUENT GROSS VALUE	SAMPLE MEASUREMENT	******	******		1.0	******	3.6		0	DAILY	GRAB
	PERMIT REQUIREMENT	******	******	**** ****	1.0 MO MIN	******	4.0 MO MAX	(19) MG/L		WEEK-DAYS	GRAB
E. COLI 51040 1 0 0 EFFLUENT GROSS VALUE	SAMPLE MEASUREMENT	******	******		******		2		0	WEEKLY	GRAB
	PERMIT REQUIREMENT	******	******	**** ****	******	126 DAILY AV	394 SINGGRAB	(3Z) C/100ML		WEEKLY	GRAB

NAME/TITLE PRINCIPAL EXECUTIVE OFFICER

JUN CHANG
DEPUTY DIRECTOR

TYPED OR PRINTED

I certify under penalty of law that this document and all attachments were prepared under my direction or supervision in accordance with a system designed to assure that qualified personnel properly gather and evaluate the information submitted. Based on my inquiry of the person or persons who manage the system, or those persons directly responsible for gathering the information, the information submitted is, to the best of my knowledge and belief, true, accurate and complete. I am aware that there are significant penalties for submitting false information, including the possibility of fine and imprisonment for knowing violations. See 18 U.S.C. § 1001 and 33 USC § 1319. (Penalties under these statutes may include fines up to $10,000 and/or imprisonment/confinement of between 6 months and 5 years.)

SIGNATURE OF PRINCIPAL EXECUTIVE OFFICER OR AUTHORIZED AGENT

TELEPHONE AREA	NUMBER	DATE YEAR	MO	DAY
281	575-2824	09	10	07

COMMENT AND EXPLANATIONS OF ANY VIOLATIONS (Reference all attachments here)

PERMITTEE NAME/ADDRESS (Include Facility Name/Location if different)

NATIONAL POLLUTANT DISCHARGE ELIMINATION SYSTEM (NPDES)
DISCHARGE MONITORING REPORT (DMR)

NAME: CITY OF HOUSTON
ADDRESS: 4545 GROVEWAY
HOUSTON, TX 77087-1122

FACILITY: KINGWOOD WEST WWTP
LOCATION: HUMBLE, TX 77339

PERMIT NUMBER: TX0088501
DISCHARGE NUMBER: 001 A

MINOR

M - INTERIM I
DOMESTIC FACILITY - 001 EFFLUENT

☐ Check here if No Discharge

MONITORING PERIOD	YEAR	MO	DAY		YEAR	MO	DAY
FROM	09	04	01	TO	09	04	30

NOTE: Read instructions before completing this form.

PARAMETER		QUANTITY OR LOADING			QUALITY OR CONCENTRATION				NO. EX	FREQUENCY OF ANALYSIS	SAMPLE TYPE
		AVERAGE	MAXIMUM	UNITS	MINIMUM	AVERAGE	MAXIMUM	UNITS			
BOD, CARBONACEOUS 05 DAY, 20C 80082 1 0 0 EFFLUENT GROSS VALUE	SAMPLE MEASUREMENT	5	******		******	1	3		0	ONCE/WEEK	COMPOS
	PERMIT REQUIREMENT	32 DAILY AVG	****** ******	(26) LBS/DY	***** *****	10 DAILY AVG	35 SINGLEGRAB	(19) MG/L		ONCE/WEEK	GRAB
	SAMPLE MEASUREMENT										
	PERMIT REQUIREMENT										
	SAMPLE MEASUREMENT										
	PERMIT REQUIREMENT										
	SAMPLE MEASUREMENT										
	PERMIT REQUIREMENT										
	SAMPLE MEASUREMENT										
	PERMIT REQUIREMENT										
	SAMPLE MEASUREMENT										
	PERMIT REQUIREMENT										
	SAMPLE MEASUREMENT										
	PERMIT REQUIREMENT										

NAME/TITLE PRINCIPAL EXECUTIVE OFFICER

JUN CHANG
DEPUTY DIRECTOR

TYPED OR PRINTED

I certify under penalty of law that this document and all attachments were prepared under my direction or supervision in accordance with a system designed to assure that qualified personnel properly gather and evaluate the information submitted. Based on my inquiry of the person or persons who manage the system, or those persons directly responsible for gathering the information, the information submitted is, to the best of my knowledge and belief, true, accurate and complete. I am aware that there are significant penalties for submitting false information, including the possibility of fine and imprisonment for knowing violations. See 18 U.S.C. § 1001 and 33 USC § 1319. (Penalties under these statutes may include fines up to $10,000 and/or maximum imprisonment of between 6 months and 5 years.)

SIGNATURE OF PRINCIPAL EXECUTIVE OFFICER OR AUTHORIZED AGENT

TELEPHONE		DATE		
AREA	NUMBER	YEAR	MO	DAY
281	575-2824	09	10	07

COMMENT AND EXPLANATIONS OF ANY VIOLATIONS (Reference all attachments here)

PERMITTEE NAME/ADDRESS (Include Facility Name/Location if different)

NATIONAL POLLUTANT DISCHARGE ELIMINATION SYSTEM (NPDES)
DISCHARGE MONITORING REPORT (DMR)

NAME: CITY OF HOUSTON
ADDRESS: 4545 GROVEWAY
HOUSTON TX 77087-1122

FACILITY: KINGWOOD WEST WWTP
LOCATION: HUMBLE, TX 77339

PERMIT NUMBER: TX0088501
DISCHARGE NUMBER: 001 A

MINOR
M - INTERIM I
DOMESTIC FACILITY - 001 EFFLUENT

☐ Check here if No Discharge

MONITORING PERIOD	YEAR	MO	DAY		YEAR	MO	DAY
FROM	09	05	01	TO	09	05	31

NOTE: Read instructions before completing this form.

PARAMETER		QUANTITY OR LOADING AVERAGE	QUANTITY OR LOADING MAXIMUM	QUANTITY OR LOADING UNITS	QUALITY OR CONCENTRATION MINIMUM	QUALITY OR CONCENTRATION AVERAGE	QUALITY OR CONCENTRATION MAXIMUM	QUALITY OR CONCENTRATION UNITS	NO. EX	FREQUENCY OF ANALYSIS	SAMPLE TYPE
OXYGEN, DISSOLVED (DO) 00300 1 0 0 EFFLUENT GROSS VALUE	SAMPLE MEASUREMENT	******	******		7.5	******	******		0	WEEKLY	GRAB
	PERMIT REQUIREMENT	******	******	**** ****	6.0 MO MIN	******	******	(19) MG/L		WEEKLY	GRAB
PH 00400 1 0 0 EFFLUENT GROSS VALUE	SAMPLE MEASUREMENT	******	******		7.2	******	7.4		0	WEEKLY	GRAB
	PERMIT REQUIREMENT	******	******	**** ****	6.0 MINIMUM	******	9.0 MAXIMUM	(12) SU		ONCE/ MONTH	GRAB
SOLIDS, TOTAL SUSPENDED 00530 1 0 0 EFFLUENT GROSS VALUE	SAMPLE MEASUREMENT	9	******		******	3	5		0	WEEKLY	COMPOS
	PERMIT REQUIREMENT	47 DAILY AV	******	(26) LBS/DY	******	15 DAILY AV	60 SINGGRAB	(19) MG/L		WEEKLY	GRAB
NITROGEN, AMMONIA TOTAL (AS N) 00610 1 0 0 EFFLUENT GROSS VALUE	SAMPLE MEASUREMENT	6.0	******		******	2.6	15.6		1	WEEKLY	COMPOS
	PERMIT REQUIREMENT	9.5 DAILY AV	******	(26) LBS/DY	******	3 DAILY AV	15 SINGGRAB	(19) MG/L		WEEKLY	GRAB
FLOW, IN CONDUIT OR THRU TREATMENT PLANT 50050 1 0 0 EFFLUENT GROSS VALUE	SAMPLE MEASUREMENT	0.365	0.452		******	******	******		0	CONTIN UOUS	TOTALZ
	PERMIT REQUIREMENT	0.378 DAILY AV	REPORT DAILY MX	(03) MGD	******	******	******	**** ****		WEEK-DAYS	INSTAN
CHLORINE, TOTAL RESIDUAL 50060 1 0 0 EFFLUENT GROSS VALUE	SAMPLE MEASUREMENT	******	******		1.2	******	3.8		0	DAILY	GRAB
	PERMIT REQUIREMENT	******	******	**** ****	1.0 MO MIN	******	4.0 MO MAX	(19) MG/L		WEEK-DAYS	GRAB
E. COLI 51040 1 0 0 EFFLUENT GROSS VALUE	SAMPLE MEASUREMENT	******	******		******		22		0	WEEKLY	GRAB
	PERMIT REQUIREMENT	******	******	**** ****	******	126 DAILY AV	394 SINGGRAB	(3Z) C/100ML		WEEKLY	GRAB

NAME/TITLE PRINCIPAL EXECUTIVE OFFICER

JUN CHANG
DEPUTY DIRECTOR

TYPED OR PRINTED

I certify under penalty of law that this document and all attachments were prepared under my direction or supervision in accordance with a system designed to assure that qualified personnel properly gather and evaluate the information submitted. Based on my inquiry of the person or persons who manage the system, or those persons directly responsible for gathering the information, the information submitted is, to the best of my knowledge and belief, true, accurate and complete. I am aware that there are significant penalties for submitting false information, including the possibility of fine and imprisonment for knowing violations. See 18 U.S.C. § 1001 and 33 USC § 1319. (Penalties under these statutes may include fines up to $10,000 and/or maximum imprisonment of between 6 months and 5 years.)

SIGNATURE OF PRINCIPAL EXECUTIVE OFFICER OR AUTHORIZED AGENT

TELEPHONE AREA	TELEPHONE NUMBER	DATE YEAR	DATE MO	DATE DAY
281	575-2824	09	10	07

COMMENT AND EXPLANATIONS OF ANY VIOLATIONS (Reference all attachments here)

PERMITTEE NAME/ADDRESS (Include Facility Name/Location if different)

NATIONAL POLLUTANT DISCHARGE ELIMINATION SYSTEM (NPDES)
DISCHARGE MONITORING REPORT (DMR)

NAME: CITY OF HOUSTON
ADDRESS: 4545 GROVEWAY
HOUSTON, TX 77087-1122

FACILITY: KINGWOOD WEST WWTP
LOCATION: HUMBLE, TX 77339

TX0088501 — PERMIT NUMBER
001 A — DISCHARGE NUMBER

MINOR
M - INTERIM I
DOMESTIC FACILITY - 001 EFFLUENT

☐ Check here if No Discharge

MONITORING PERIOD	YEAR	MO	DAY		YEAR	MO	DAY
FROM	09	05	01	TO	09	05	31

NOTE: Read instructions before completing this form.

PARAMETER		QUANTITY OR LOADING			QUALITY OR CONCENTRATION				NO. EX	FREQUENCY OF ANALYSIS	SAMPLE TYPE
		AVERAGE	MAXIMUM	UNITS	MINIMUM	AVERAGE	MAXIMUM	UNITS			
BOD, CARBONACEOUS 05 DAY, 20C 80082 1 0 0 EFFLUENT GROSS VALUE	SAMPLE MEASUREMENT	4	******		******	2	4		0	ONCE/ WEEK	COMPOS
	PERMIT REQUIREMENT	32 DAILY AVG	****** ******	(26) LBS/DY	***** *****	10 DAILY AVG	35 SINGLEGRAB	(19) MG/L		ONCE/ WEEK	GRAB
	SAMPLE MEASUREMENT										
	PERMIT REQUIREMENT										
	SAMPLE MEASUREMENT										
	PERMIT REQUIREMENT										
	SAMPLE MEASUREMENT										
	PERMIT REQUIREMENT										
	SAMPLE MEASUREMENT										
	PERMIT REQUIREMENT										
	SAMPLE MEASUREMENT										
	PERMIT REQUIREMENT										
	SAMPLE MEASUREMENT										
	PERMIT REQUIREMENT										

NAME/TITLE PRINCIPAL EXECUTIVE OFFICER

JUN CHANG
DEPUTY DIRECTOR

TYPED OR PRINTED

I certify under penalty of law that this document and all attachments were prepared under my direction or supervision in accordance with a system designed to assure that qualified personnel properly gather and evaluate the information submitted. Based on my inquiry of the person or persons who manage the system, or those persons directly responsible for gathering the information, the information submitted is, to the best of my knowledge and belief, true, accurate and complete. I am aware that there are significant penalties for submitting false information, including the possibility of fine and imprisonment for knowing violations. See 18 U.S.C. § 1001 and 33 USC § 1319. (Penalties under these statutes may include fines up to $10,000 and or maximum imprisonment of between 6 months and 5 years.)

SIGNATURE OF PRINCIPAL EXECUTIVE OFFICER OR AUTHORIZED AGENT

TELEPHONE		DATE		
281	575-2824	09	10	07
AREA	NUMBER	YEAR	MO	DAY

COMMENT AND EXPLANATIONS OF ANY VIOLATIONS (Reference all attachments here)

PERMITTEE NAME/ADDRESS (Include Facility Name/Location if different)

NATIONAL POLLUTANT DISCHARGE ELIMINATION SYSTEM (NPDES)
DISCHARGE MONITORING REPORT (DMR)

NAME: CITY OF HOUSTON
ADDRESS: 4545 GROVEWAY
HOUSTON TX 77087-1122

FACILITY: KINGWOOD WEST WWTP
LOCATION: HUMBLE, TX 77339

PERMIT NUMBER: TX0088501
DISCHARGE NUMBER: 001 A

MINOR
M - INTERIM I
DOMESTIC FACILITY - 001 EFFLUENT

MONITORING PERIOD

FROM YEAR	MO	DAY	TO YEAR	MO	DAY
09	06	01	09	06	30

☐ Check here if No Discharge

NOTE: Read instructions before completing this form.

PARAMETER		QUANTITY OR LOADING AVERAGE	QUANTITY OR LOADING MAXIMUM	QUANTITY OR LOADING UNITS	QUALITY OR CONCENTRATION MINIMUM	QUALITY OR CONCENTRATION AVERAGE	QUALITY OR CONCENTRATION MAXIMUM	QUALITY OR CONCENTRATION UNITS	NO. EX	FREQUENCY OF ANALYSIS	SAMPLE TYPE
OXYGEN, DISSOLVED (DO) 00300 1 0 0 EFFLUENT GROSS VALUE	SAMPLE MEASUREMENT	******	******		7.2	******	******		0	WEEKLY	GRAB
	PERMIT REQUIREMENT	******	******	**** ****	6.0 MO MIN	******	******	(19) MG/L		WEEKLY	GRAB
PH 00400 1 0 0 EFFLUENT GROSS VALUE	SAMPLE MEASUREMENT	******	******		7.2	******	7.5		0	WEEKLY	GRAB
	PERMIT REQUIREMENT	******	******	**** ****	6.0 MINIMUM	******	9.0 MAXIMUM	(12) SU		ONCE/ MONTH	GRAB
SOLIDS, TOTAL SUSPENDED 00530 1 0 0 EFFLUENT GROSS VALUE	SAMPLE MEASUREMENT	20	******		******	7	20		0	WEEKLY	COMPOS
	PERMIT REQUIREMENT	47 DAILY AV	******	(26) LBS/DY	******	15 DAILY AV	60 SINGGRAB	(19) MG/L		WEEKLY	GRAB
NITROGEN, AMMONIA TOTAL (AS N) 00610 1 0 0 EFFLUENT GROSS VALUE	SAMPLE MEASUREMENT	0.3	******		******	0.1	0.1		0	WEEKLY	COMPOS
	PERMIT REQUIREMENT	9.5 DAILY AV	******	(26) LBS/DY	******	3 DAILY AV	15 SINGGRAB	(19) MG/L		WEEKLY	GRAB
FLOW, IN CONDUIT OR THRU TREATMENT PLANT 50050 1 0 0 EFFLUENT GROSS VALUE	SAMPLE MEASUREMENT	0.342	0.428		******	******	******		0	CONTIN UOUS	TOTALZ
	PERMIT REQUIREMENT	0.378 DAILY AV	REPORT DAILY MX	(03) MGD	******	******	******	**** ****		WEEK-DAYS	INSTAN
CHLORINE, TOTAL RESIDUAL 50060 1 0 0 EFFLUENT GROSS VALUE	SAMPLE MEASUREMENT	******	******		1.1	******	3.7		0	DAILY	GRAB
	PERMIT REQUIREMENT	******	******	**** ****	1.0 MO MIN	******	4.0 MO MAX	(19) MG/L		WEEK-DAYS	GRAB
E. COLI 51040 1 0 0 EFFLUENT GROSS VALUE	SAMPLE MEASUREMENT	******	******		******		1986		1	WEEKLY	GRAB
	PERMIT REQUIREMENT	******	******	**** ****	******	126 DAILY AV	394 SINGGRAB	(3Z) C/100ML		WEEKLY	GRAB

NAME/TITLE PRINCIPAL EXECUTIVE OFFICER

JUN CHANG
DEPUTY DIRECTOR

TYPED OR PRINTED

I certify under penalty of law that this document and all attachments were prepared under my direction or supervision in accordance with a system designed to assure that qualified personnel properly gather and evaluate the information submitted. Based on my inquiry of the person or persons who manage the system, or those persons directly responsible for gathering the information, the information submitted is, to the best of my knowledge and belief, true, accurate and complete. I am aware that there are significant penalties for submitting false information, including the possibility of fine and imprisonment for knowing violations. See 18 U.S.C. § 1001 and 33 USC § 1319. (Penalties under these statutes may include fines up to $10,000 and or minimum imprisonment of between 6 months and 5 years.)

SIGNATURE OF PRINCIPAL EXECUTIVE OFFICER OR AUTHORIZED AGENT

TELEPHONE AREA	NUMBER	DATE YEAR	MO	DAY
281	575-2824	09	10	07

COMMENT AND EXPLANATIONS OF ANY VIOLATIONS (Reference all attachments here)

PERMITTEE NAME/ADDRESS (Include Facility Name/Location if different)

NATIONAL POLLUTANT DISCHARGE ELIMINATION SYSTEM (NPDES)
DISCHARGE MONITORING REPORT (DMR)

NAME: CITY OF HOUSTON
ADDRESS: 4545 GROVEWAY
HOUSTON, TX 77087-1122

FACILITY: KINGWOOD WEST WWTP
LOCATION: HUMBLE, TX 77339

PERMIT NUMBER: TX0088501
DISCHARGE NUMBER: 001 A

MINOR

M - INTERIM I
DOMESTIC FACILITY - 001 EFFLUENT

MONITORING PERIOD

	YEAR	MO	DAY		YEAR	MO	DAY
FROM	09	06	01	TO	09	06	30

☐ Check here if No Discharge

NOTE: Read instructions before completing this form.

PARAMETER		QUANTITY OR LOADING			QUALITY OR CONCENTRATION				NO. EX	FREQUENCY OF ANALYSIS	SAMPLE TYPE
		AVERAGE	MAXIMUM	UNITS	MINIMUM	AVERAGE	MAXIMUM	UNITS			
BOD, CARBONACEOUS 05 DAY, 20C 80082 1 0 0 EFFLUENT GROSS VALUE	SAMPLE MEASUREMENT	4	******		******	2	2		0	ONCE/ WEEK	COMPOS
	PERMIT REQUIREMENT	32 DAILY AVG	****** ******	(26) LBS/DY	***** *****	10 DAILY AVG	35 SINGLEGRAB	(19) MG/L		ONCE/ WEEK	GRAB
	SAMPLE MEASUREMENT										
	PERMIT REQUIREMENT										
	SAMPLE MEASUREMENT										
	PERMIT REQUIREMENT										
	SAMPLE MEASUREMENT										
	PERMIT REQUIREMENT										
	SAMPLE MEASUREMENT										
	PERMIT REQUIREMENT										
	SAMPLE MEASUREMENT										
	PERMIT REQUIREMENT										
	SAMPLE MEASUREMENT										
	PERMIT REQUIREMENT										

NAME/TITLE PRINCIPAL EXECUTIVE OFFICER

JUN CHANG
DEPUTY DIRECTOR

TYPED OR PRINTED

I certify under penalty of law that this document and all attachments were prepared under my direction or supervision in accordance with a system designed to assure that qualified personnel properly gather and evaluate the information submitted. Based on my inquiry of the person or persons who manage the system, or those persons directly responsible for gathering the information, the information submitted is, to the best of my knowledge and belief, true, accurate and complete. I am aware that there are significant penalties for submitting false information, including the possibility of fine and imprisonment for knowing violations. See 18 U.S.C. § 1001 and 33 USC § 1319. (Penalties under these statutes may include fines up to $10,000 and/or maximum imprisonment of between 6 months and 5 years.)

SIGNATURE OF PRINCIPAL EXECUTIVE OFFICER OR AUTHORIZED AGENT

TELEPHONE		DATE		
AREA	NUMBER	YEAR	MO	DAY
281	575-2824	09	10	07

COMMENT AND EXPLANATIONS OF ANY VIOLATIONS (Reference all attachments here)

PERMITTEE NAME/ADDRESS (Include Facility Name/Location if different)

NATIONAL POLLUTANT DISCHARGE ELIMINATION SYSTEM (NPDES)
DISCHARGE MONITORING REPORT (DMR)

NAME CITY OF HOUSTON
ADDRESS 4545 GROVEWAY
HOUSTON TX 77087-1122

FACILITY KINGWOOD WEST WWTP
LOCATION HUMBLE, TX 77339

TX0088501 — PERMIT NUMBER
001 A — DISCHARGE NUMBER

MINOR
M - INTERIM I
DOMESTIC FACILITY - 001 EFFLUENT

MONITORING PERIOD

	YEAR	MO	DAY		YEAR	MO	DAY
FROM	09	07	01	TO	09	07	31

☐ Check here if No Discharge

NOTE: Read instructions before completing this form.

PARAMETER		QUANTITY OR LOADING			QUALITY OR CONCENTRATION				NO. EX	FREQUENCY OF ANALYSIS	SAMPLE TYPE
		AVERAGE	MAXIMUM	UNITS	MINIMUM	AVERAGE	MAXIMUM	UNITS			
OXYGEN, DISSOLVED (DO) 00300 1 0 0 EFFLUENT GROSS VALUE	SAMPLE MEASUREMENT	******	******		7.1	******	******		0	WEEKLY	GRAB
	PERMIT REQUIREMENT	******	******	**** ****	6.0 MO MIN	******	******	(19) MG/L		WEEKLY	GRAB
PH 00400 1 0 0 EFFLUENT GROSS VALUE	SAMPLE MEASUREMENT	******	******		7.3	******	7.8		0	WEEKLY	GRAB
	PERMIT REQUIREMENT	******	******	**** ****	6.0 MINIMUM	******	9.0 MAXIMUM	(12) SU		ONCE/ MONTH	GRAB
SOLIDS, TOTAL SUSPENDED 00530 1 0 0 EFFLUENT GROSS VALUE	SAMPLE MEASUREMENT	6	******		******	2	3		0	WEEKLY	COMPOS
	PERMIT REQUIREMENT	47 DAILY AV	******	(26) LBS/DY	******	15 DAILY AV	60 SINGGRAB	(19) MG/L		WEEKLY	GRAB
NITROGEN, AMMONIA TOTAL (AS N) 00610 1 0 0 EFFLUENT GROSS VALUE	SAMPLE MEASUREMENT	0.3	******		******	0.1	0.1		0	WEEKLY	COMPOS
	PERMIT REQUIREMENT	9.5 DAILY AV	******	(26) LBS/DY	******	3 DAILY AV	15 SINGGRAB	(19) MG/L		WEEKLY	GRAB
FLOW, IN CONDUIT OR THRU TREATMENT PLANT 50050 1 0 0 EFFLUENT GROSS VALUE	SAMPLE MEASUREMENT	0.317	0.577		******	******	******		0	CONTIN UOUS	TOTALZ
	PERMIT REQUIREMENT	0.378 DAILY AV	REPORT DAILY MX	(03) MGD	******	******	******	**** ****		WEEK-DAYS	INSTAN
CHLORINE, TOTAL RESIDUAL 50060 1 0 0 EFFLUENT GROSS VALUE	SAMPLE MEASUREMENT	******	******		1.1	******	3.7		0	DAILY	GRAB
	PERMIT REQUIREMENT	******	******	**** ****	1.0 MO MIN	******	4.0 MO MAX	(19) MG/L		WEEK-DAYS	GRAB
E. COLI 51040 1 0 0 EFFLUENT GROSS VALUE	SAMPLE MEASUREMENT	******	******		******		2		0	WEEKLY	GRAB
	PERMIT REQUIREMENT	******	******	**** ****	******	126 DAILY AV	394 SINGGRAB	(3Z) C/100ML		WEEKLY	GRAB

NAME/TITLE PRINCIPAL EXECUTIVE OFFICER

JUN CHANG
DEPUTY DIRECTOR

TYPED OR PRINTED

I certify under penalty of law that this document and all attachments were prepared under my direction or supervision in accordance with a system designed to assure that qualified personnel properly gather and evaluate the information submitted. Based on my inquiry of the person or persons who manage the system, or those persons directly responsible for gathering the information, the information submitted is, to the best of my knowledge and belief, true, accurate and complete. I am aware that there are significant penalties for submitting false information, including the possibility of fine and imprisonment for knowing violations. See 18 U.S.C. § 1001 and 33 USC § 1319. (Penalties under these statutes may include fines up to $10,000 and/or maximum imprisonment of between 6 months and 5 years.)

SIGNATURE OF PRINCIPAL EXECUTIVE OFFICER OR AUTHORIZED AGENT

TELEPHONE		DATE		
281	575-2824	09	10	07
AREA	NUMBER	YEAR	MO	DAY

COMMENT AND EXPLANATIONS OF ANY VIOLATIONS (Reference all attachments here)

PERMITTEE NAME/ADDRESS (Include Facility Name/Location if different)

NATIONAL POLLUTANT DISCHARGE ELIMINATION SYSTEM (NPDES)
DISCHARGE MONITORING REPORT (DMR)

NAME: CITY OF HOUSTON
ADDRESS: 4545 GROVEWAY
HOUSTON, TX 77087-1122

FACILITY: KINGWOOD WEST WWTP
LOCATION: HUMBLE, TX 77339

PERMIT NUMBER: TX0088501
DISCHARGE NUMBER: 001 A

MINOR
M - INTERIM I
DOMESTIC FACILITY - 001 EFFLUENT

☐ Check here if No Discharge

MONITORING PERIOD

FROM YEAR	MO	DAY	TO YEAR	MO	DAY
09	07	01	09	07	31

NOTE: Read instructions before completing this form.

PARAMETER		QUANTITY OR LOADING			QUALITY OR CONCENTRATION				NO. EX	FREQUENCY OF ANALYSIS	SAMPLE TYPE
		AVERAGE	MAXIMUM	UNITS	MINIMUM	AVERAGE	MAXIMUM	UNITS			
BOD, CARBONACEOUS 05 DAY, 20C 80082 1 0 0 EFFLUENT GROSS VALUE	SAMPLE MEASUREMENT	3	******		******	1	1		0	ONCE/WEEK	COMPOS
	PERMIT REQUIREMENT	32 DAILY AVG	****** ******	(26) LBS/DY	***** *****	10 DAILY AVG	35 SINGLEGRAB	(19) MG/L		ONCE/WEEK	GRAB
	SAMPLE MEASUREMENT										
	PERMIT REQUIREMENT										
	SAMPLE MEASUREMENT										
	PERMIT REQUIREMENT										
	SAMPLE MEASUREMENT										
	PERMIT REQUIREMENT										
	SAMPLE MEASUREMENT										
	PERMIT REQUIREMENT										
	SAMPLE MEASUREMENT										
	PERMIT REQUIREMENT										
	SAMPLE MEASUREMENT										
	PERMIT REQUIREMENT										

NAME/TITLE PRINCIPAL EXECUTIVE OFFICER

JUN CHANG
DEPUTY DIRECTOR

TYPED OR PRINTED

I certify under penalty of law that this document and all attachments were prepared under my direction or supervision in accordance with a system designed to assure that qualified personnel properly gather and evaluate the information submitted. Based on my inquiry of the person or persons who manage the system, or those persons directly responsible for gathering the information, the information submitted is, to the best of my knowledge and belief, true, accurate and complete. I am aware that there are significant penalties for submitting false information, including the possibility of fine and imprisonment for knowing violations. See 18 U.S.C. § 1001 and 33 USC § 1319. (Penalties under these statutes may include fines up to $10,000 and or maximum imprisonment of between 6 months and 5 years.)

SIGNATURE OF PRINCIPAL EXECUTIVE OFFICER OR AUTHORIZED AGENT

TELEPHONE AREA	NUMBER	DATE YEAR	MO	DAY
281	575-2824	09	10	07

COMMENT AND EXPLANATIONS OF ANY VIOLATIONS (Reference all attachments here)

PERMITTEE NAME/ADDRESS (Include Facility Name/Location if different)

NATIONAL POLLUTANT DISCHARGE ELIMINATION SYSTEM (NPDES)
DISCHARGE MONITORING REPORT (DMR)

NAME CITY OF HOUSTON
ADDRESS 4545 GROVEWAY
HOUSTON TX 77087-1122

FACILITY KINGWOOD WEST WWTP
LOCATION HUMBLE, TX 77339

PERMIT NUMBER: TX0088501
DISCHARGE NUMBER: 001 A

MINOR

M - INTERIM I
DOMESTIC FACILITY - 001 EFFLUENT

☐ Check here if No Discharge

MONITORING PERIOD

FROM YEAR	MO	DAY	TO YEAR	MO	DAY
09	08	01	09	08	31

NOTE: Read instructions before completing this form.

PARAMETER		QUANTITY OR LOADING AVERAGE	QUANTITY OR LOADING MAXIMUM	QUANTITY OR LOADING UNITS	QUALITY OR CONCENTRATION MINIMUM	QUALITY OR CONCENTRATION AVERAGE	QUALITY OR CONCENTRATION MAXIMUM	QUALITY OR CONCENTRATION UNITS	NO. EX	FREQUENCY OF ANALYSIS	SAMPLE TYPE
OXYGEN, DISSOLVED (DO) 00300 1 0 0 EFFLUENT GROSS VALUE	SAMPLE MEASUREMENT	******	******		7.1	******	******		0	WEEKLY	GRAB
	PERMIT REQUIREMENT	******	******	**** ****	6.0 MO MIN	******	******	(19) MG/L		WEEKLY	GRAB
PH 00400 1 0 0 EFFLUENT GROSS VALUE	SAMPLE MEASUREMENT	******	******		7.2	******	7.5		0	WEEKLY	GRAB
	PERMIT REQUIREMENT	******	******	**** ****	6.0 MINIMUM	******	9.0 MAXIMUM	(12) SU		ONCE/ MONTH	GRAB
SOLIDS, TOTAL SUSPENDED 00530 1 0 0 EFFLUENT GROSS VALUE	SAMPLE MEASUREMENT	6	******		******	2	3		0	WEEKLY	COMPOS
	PERMIT REQUIREMENT	47 DAILY AV	******	(26) LBS/DY	******	15 DAILY AV	60 SINGGRAB	(19) MG/L		WEEKLY	GRAB
NITROGEN, AMMONIA TOTAL (AS N) 00610 1 0 0 EFFLUENT GROSS VALUE	SAMPLE MEASUREMENT	0.4	******		******	0.2	0.4		0	WEEKLY	COMPOS
	PERMIT REQUIREMENT	9.5 DAILY AV	******	(26) LBS/DY	******	3 DAILY AV	15 SINGGRAB	(19) MG/L		WEEKLY	GRAB
FLOW, IN CONDUIT OR THRU TREATMENT PLANT 50050 1 0 0 EFFLUENT GROSS VALUE	SAMPLE MEASUREMENT	0.275	0.327		******	******	******		0	CONTIN UOUS	TOTALZ
	PERMIT REQUIREMENT	0.378 DAILY AV	REPORT DAILY MX	(03) MGD	******	******	******	**** ****		WEEK-DAYS	INSTAN
CHLORINE, TOTAL RESIDUAL 50060 1 0 0 EFFLUENT GROSS VALUE	SAMPLE MEASUREMENT	******	******		1.4	******	3.7		0	DAILY	GRAB
	PERMIT REQUIREMENT	******	******	**** ****	1.0 MO MIN	******	4.0 MO MAX	(19) MG/L		WEEK-DAYS	GRAB
E. COLI 51040 1 0 0 EFFLUENT GROSS VALUE	SAMPLE MEASUREMENT	******	******		******		1		0	WEEKLY	GRAB
	PERMIT REQUIREMENT	******	******	**** ****	******	126 DAILY AV	394 SINGGRAB	(3Z) C/100ML		WEEKLY	GRAB

NAME/TITLE PRINCIPAL EXECUTIVE OFFICER

JUN CHANG
DEPUTY DIRECTOR

TYPED OR PRINTED

I certify under penalty of law that this document and all attachments were prepared under my direction or supervision in accordance with a system designed to assure that qualified personnel properly gather and evaluate the information submitted. Based on my inquiry of the person or persons who manage the system, or those persons directly responsible for gathering the information, the information submitted is, to the best of my knowledge and belief, true, accurate and complete. I am aware that there are significant penalties for submitting false information, including the possibility of fine and imprisonment for knowing violations. See 18 U.S.C. § 1001 and 33 USC § 1319. (Penalties under these statutes may include fines up to $10,000 and or imprisonment of between 6 months and 5 years.)

SIGNATURE OF PRINCIPAL EXECUTIVE OFFICER OR AUTHORIZED AGENT

TELEPHONE AREA	TELEPHONE NUMBER	DATE YEAR	DATE MO	DATE DAY
281	575-2824	09	10	07

COMMENT AND EXPLANATIONS OF ANY VIOLATIONS (Reference all attachments here)

PERMITTEE NAME/ADDRESS (Include Facility Name/Location if different)

NATIONAL POLLUTANT DISCHARGE ELIMINATION SYSTEM (NPDES)
DISCHARGE MONITORING REPORT (DMR)

NAME: CITY OF HOUSTON
ADDRESS: 4545 GROVEWAY
HOUSTON, TX 77087-1122

FACILITY: KINGWOOD WEST WWTP
LOCATION: HUMBLE, TX 77339

PERMIT NUMBER: TX0088501
DISCHARGE NUMBER: 001 A

MINOR

M - INTERIM I
DOMESTIC FACILITY - 001 EFFLUENT

MONITORING PERIOD

FROM YEAR	MO	DAY	TO YEAR	MO	DAY
09	08	01	09	08	31

☐ Check here if No Discharge

NOTE: Read instructions before completing this form.

PARAMETER		QUANTITY OR LOADING AVERAGE	MAXIMUM	UNITS	QUALITY OR CONCENTRATION MINIMUM	AVERAGE	MAXIMUM	UNITS	NO. EX	FREQUENCY OF ANALYSIS	SAMPLE TYPE
BOD, CARBONACEOUS 05 DAY, 20C 80082 1 0 0 EFFLUENT GROSS VALUE	SAMPLE MEASUREMENT	7	******		******	3	8		0	ONCE/ WEEK	COMPOS
	PERMIT REQUIREMENT	32 DAILY AVG	****** ******	(26) LBS/DY	***** *****	10 DAILY AVG	35 SINGLEGRAB	(19) MG/L		ONCE/ WEEK	GRAB
	SAMPLE MEASUREMENT										
	PERMIT REQUIREMENT										
	SAMPLE MEASUREMENT										
	PERMIT REQUIREMENT										
	SAMPLE MEASUREMENT										
	PERMIT REQUIREMENT										
	SAMPLE MEASUREMENT										
	PERMIT REQUIREMENT										
	SAMPLE MEASUREMENT										
	PERMIT REQUIREMENT										
	SAMPLE MEASUREMENT										
	PERMIT REQUIREMENT										

NAME/TITLE PRINCIPAL EXECUTIVE OFFICER

JUN CHANG
DEPUTY DIRECTOR

TYPED OR PRINTED

I certify under penalty of law that this document and all attachments were prepared under my direction or supervision in accordance with a system designed to assure that qualified personnel properly gather and evaluate the information submitted. Based on my inquiry of the person or persons who manage the system, or those persons directly responsible for gathering the information, the information submitted is, to the best of my knowledge and belief, true, accurate and complete. I am aware that there are significant penalties for submitting false information, including the possibility of fine and imprisonment for knowing violations. See 18 U.S.C. § 1001 and 33 USC § 1319. (Penalties under these statutes may include fines up to $10,000 and or maximum imprisonment of between 6 months and 5 years.)

SIGNATURE OF PRINCIPAL EXECUTIVE OFFICER OR AUTHORIZED AGENT

TELEPHONE AREA	NUMBER	DATE YEAR	MO	DAY
281	575-2824	09	10	07

COMMENT AND EXPLANATIONS OF ANY VIOLATIONS (Reference all attachments here)

APPENDIX J

WATER DISTRIBUTION LINE INFORMATION

Kingwood, Forest Cove, MUD 48, and MUD 58 Water Distribution Systems

Line Type	Size	Count	Feet	Miles
Unknown	8	7	3,918	0.74
Sub-Total		7	3,918	0.74
Casing	12	5	374	0.07
	16	4	652	0.12
Sub-Total		9	1,026	0.19
Collector	4	2	185	0.03
	6	2	321	0.06
	8	3	104	0.02
Sub-Total		7	609	0.12
Fire	4	1	82	0.02
	6	8	561	0.11
	8	2	106	0.02
Sub-Total		11	749	0.14
Hydrant Lead	Unknown	1	11	0.00
	6	4,617	51,770	9.80
	8	2	19	0.00
Sub-Total		4,620	51,799	9.81
Main	Unknown	19	640	0.12
	2	293	60,100	11.38
	3	18	4,567	0.86
	4	1,033	120,943	22.91
	6	1,973	326,226	61.79
	8	4,002	647,343	122.60
	10	3	590	0.11
	12	2,255	345,584	65.45
	16	246	38,725	7.33
	20	87	17,174	3.25
	24	68	13,779	2.61
Sub-Total		9,997	1,575,670	298.42

Kingwood, Forest Cove, MUD 48, and MUD 58 Water Distribution Systems

Line Type	Size	Count	Feet	Miles
Well_Collect	12	56	26,491	5.02
	16	25	4,578	0.87
	20	3	320	0.06
	30	4	733	0.14
Sub-Total		88	32,123	6.08
Total		14,739	1,665,894	315.51
Fire Hydrants		2,328		
Valves		6,138		

Revised information that includes the North Lake Houston Area indicates we have an additional:

600 Fire Hydrants
840 gate valves
Water Mains
90,000 LF of 8” main
12,000 LF of 12” main
12,000 LF of 2” main
12,000 Lf of 6” main
2,000 LF of 4” main

APPENDIX K

WASTEWATER COLLECTION LINE INFORMATION

Kingwood, Forest Cove, and MUD 48/58 Wastewater Collection Systems

Line Type	Size	Count	Feet	Miles
Casing	12	1	297	0.06
	20	1	69	0.01
	22	1	181	0.03
	24	1	161	0.03
Sub-Total		4	708	0.13
Collector	Unknown	51	7,586	1.44
	4	2	90	0.02
	6	508	65,162	12.34
	8	5,453	934,462	176.98
	10	1,135	183,954	34.84
	12	224	41,164	7.80
	15	228	41,310	7.82
	16	64	9,451	1.79
	18	55	11,229	2.13
	20	22	3,472	0.66
	21	71	14,080	2.67
	24	157	24,810	4.70
	27	1	36	0.01
	30	38	5,800	1.10
	36	11	1,969	0.37
	48	1	48	0.01
Sub-Total		8,021	1,344,622	254.66
Force Main	Unknown	3	151	0.03
	4	13	19,592	3.71
	6	17	15,475	2.93
	8	14	20,446	3.87
	10	19	29,928	5.67
	12	9	17,762	3.36
	18	1	4,159	0.79

Kingwood, Forest Cove, and MUD 48 Wastewater Collection Systems

Line Type	Size	Count	Feet	Miles
Force Main (cont.)	20	2	3,215	0.61
	24	1	13,360	2.53
Sub-Total		79	124,088	23.50
Lateral	4	2	207	0.04
	6	2	101	0.02
	10	1	235	0.04
	24	1	176	0.03
Sub-Total		6	719	0.14
Overflow	8	2	228	0.04
	15	1	34	0.01
Sub-Total		3	262	0.05
Siphon	6	10	651	0.12
Sub-Total		10	651	0.12
Stub	Unknown	74	1,167	0.22
	6	595	26,498	5.02
	8	133	6,622	1.25
	10	13	1,091	0.21
	12	1	77	0.01
Sub-Total		816	35,454	6.71
Trunk	21	9	2,100	0.40
	27	20	4,743	0.90
	30	7	2,098	0.40
	48	4	886	0.17
Sub-Total		40	9,827	1.86
Total		8,979	1,516,331	287.18
Manhole		7380		

APPENDIX L

SAMPLE VALVE INSPECTION FORM

Valve Inspection

VALVE LOCATION #: _____ **DATE :** _____
CONTRACTOR: _____ **WORK ORDER NO:** _____
ENGINEER: _____ **KEY MAP:** _____

1	Turns to open	_____	**9**	Turns to close	_____
2	In-line Valve	YES / NO	**10**	Located in Concrete	YES / NO
3	Fire Hydrant Valve	YES / NO	**11**	Located in Street	YES / NO
4	Valve Size	_____			
5	Depth	_____			
6	A Box Clean	YES / NO			
7	Last Operated	_____			
8	Type of Valve	_____			

Comments _____

_____

_____

_____

_____
Field Drawing / As Built

↑
N

Inspector

APPENDIX M

HYDRANT PREVENTION MAINTENANCE 11 POINT INSPECTION

Fire Hydrant Preventive Maintenance 11 Point Inspection

1. Exercise fire hydrant valve using a valve key. To close the hydrant, turn the valve key counter clockwise, to open the hydrant turn the valve key clockwise.

2. Pressure test the fire hydrant for PSI and leaks using a (PSI Gage) ensuring that all caps are on tight. Pressure should be at least 40 p.s.i. Record pressure reading.

3. Flush fire hydrant for 2 minutes until the water is clear. If 40 p.s.i. is not achieved in step 2, retest to determine if pressure has improved. If pressure does not improve after flushing the hydrant, record on preventive maintenance report indicating that a low-pressure repair is needed. Record Pressure reading.

4. Grease all nozzles and pumper nozzle. With approved grease per manufactures recommendation

5. Use wire brush to scrape and remove rust and peeling paint.

6. Cut wild vegetation 3 feet around fire hydrant, if needed. Properly dispose of all vegetation.

7. **Paint fire hydrant (upper barrel must be painted blue) with at least two coats of paint.**

   The Bonnet should be painted according to the main size:

   a. Red – 4 inch main

   b. Yellow – 6 inch main

   c. Green – 10 to 20 inch main

   d. White – 8 inch main

   e. Orange – 24 to 60 inch main

   f. Orange Bonnet and Orange Caps – 24 to 60 inch. Pressure is 100 p.s.i. (Special high pressure)

g. Solid Red – private hydrant used inside an industrial complex

8. Install a reflector in the street, if needed parallel to the hydrant 9” from center line on fire hydrant side of the street. Be sure to thoroughly mix the glue and epoxy.

9. Replace chains, if needed.

10. Replace 2 ½ inch caps/nozzle gasket and 4-inch caps/pumper cap gasket, if needed.

11. Install a UFID label, if needed. Place all labels so that they may be seen from the street.

UFID label are the contractors sole responsibility. Existing fire hydrants that have PM preformed that have damaged or unreadable UFID label are to have new labels printed and placed on fire hydrants using existing ID numbers

New fire hydrants / replacement fire hydrants are to have a map of the area printed a cloud outline drawn around the symbol location of the new / replaced fire hydrant location indicated on map with all manufactures information, installation information & pressure information indicated on drawing. Finished maps are to be sent to UMB Contract Administrator who will issue new UFID number to contractor. UMB Contract Administrator to attach new information to GIMS form for new UFID to apply for new ID number.

New / replaced fire hydrants are to have new UFID numbers that are designated but the City of Houston.

UFID stickers and number are to be 2” X 8” print on reflective Dura Label tape or equal or better. All UFID stickers and numbers must be approved by Director.

12. Exercise fire hydrant valve using a valve key. To close the hydrant, turn the valve key counter clockwise, to open the hydrant turn the valve key clockwise.

13. Pressure test the fire hydrant for PSI and leaks using a (PSI Gage) ensuring that all caps are on tight. Pressure should be at least 40 p.s.i. Record pressure reading.

14. Flush fire hydrant for 2 minutes until the water is clear. If 40 p.s.i. is not achieved in step 2, retest to determine if pressure has improved. If pressure does not improve after flushing the hydrant, record on preventive maintenance report indicating that a low-pressure repair is needed. Record Pressure reading.

15. Grease all nozzles and pumper nozzle. With approved grease per manufactures recommendation

16. Use wire brush to scrape and remove rust and peeling paint.

17. Cut wild vegetation 3 feet around fire hydrant, if needed. Properly dispose of all vegetation.

18. Paint fire hydrant (upper barrel must be painted blue) with at least two coats of paint.

    The Bonnet should be painted according to the main size:

    a. Red – 4 inch main

    b. Yellow – 6 inch main

    c. Green – 10 to 20 inch main

    d. White – 8 inch main

    e. Orange – 24 to 60 inch main

    f. Orange Bonnet and Orange Caps – 24 to 60 inch. Pressure is 100 p.s.i. (Special high pressure)

    g. Solid Red – private hydrant used inside an industrial complex

19. Install a reflector in the street, if needed parallel to the hydrant 9” from center line on fire hydrant side of the street. Be sure to thoroughly mix the glue and epoxy.

20. Replace chains, if needed.

21. Replace 2 ½ inch caps/nozzle gasket and 4-inch caps/pumper cap gasket, if needed.

22. Install a UFID label, if needed. Place all labels so that they may be seen from the street.

    UFID label are the contractors sole responsibility. Existing fire hydrants that have PM preformed that have damaged or unreadable UFID label are to have new labels printed and placed on fire hydrants using existing ID numbers

New fire hydrants / replacement fire hydrants are to have a map of the area printed a cloud outline drawn around the symbol location of the new / replaced fire hydrant location indicated on map with all manufactures information, installation information & pressure information indicated on drawing. Finished maps are to be sent to UMB Contract Administrator who will issue new UFID number to contractor. UMB Contract Administrator to attach new information to GIMS form for new UFID to apply for new ID number.

New / replaced fire hydrants are to have new UFID numbers that are designated but the City of Houston.

UFID stickers and number are to be 2” X 8” print on reflective Dura Label tape or equal or better. All UFID stickers and numbers must be approved by Director.

APPENDIX N

CITY OF HOUSTON EMERGENCY MANAGEMENT PLAN (HEMP)

DEPARTMENT OF PUBLIC WORKS AND ENGINEERING

Standard Operating Procedures (SOP)

For the

Public Utilities Division

AUTHORITY

City of Houston Emergency Management Plan (hereinafter referred to as the Basic Plan)

Annex K, the Public Works & Engineering Department's Annex to the Basic Plan

General

4 PURPOSE

1. The purpose of this Standard Operating Procedure (SOP) is to establish, in sufficient detail, the operational responsibilities of the Public Utilities Division of the Department of Public Works and Engineering in the event of a domestic incident. Direction and control of the PUD is vested with the Director of the Department, and is delegated to the Deputy Director of the Public Utilities Division.

   A. This SOP further seeks to detail the processes and procedures whereby operations will occur within the individual Branches of the Division in any phase of emergency operations resulting from a domestic incident. It will set forth standing orders for management as well as emergency responders from the Division.

   B. This SOP provides direction and control on how to address the four phases of emergency management; **Mitigation**, **Preparedness**, **Response**, and **Recovery**, in dealing with a domestic incident, in order to return the community to its normal state, as rapidly as possible.

   C. This SOP is designed to be used in conjunction with Annex K, and separate from the Basic Plan in order to facilitate responses and reduce the bulk of documents necessary to facilitate those responses. Branches and Sections of the Division will

use this document to guide their efforts in the four phases of emergency management as directed herein, and as may be amplified by the Deputy Director or designee.

2. Scope

The Public Utilities Division consists of the following entities:

1. Utility Maintenance Branch
2. Wastewater Operations Branch
3. Water Production Branch
4. Operations Support Branch

The Division may also seek assistance from the following outside entities

a. Houston Fire Department
b. Houston Police Department
c. Solid Waste Management Department
d. Parks & Recreation Department
e. Planning & Development Department
f. Building Services Department
g. Harris County (multiple agencies)
h. Metropolitan Transit Authority (METRO)
i. Texas Department of Transportation (TxDOT)
j. Texas Commission Environmental Quality (TCEQ)
k. Texas General Land Office (GLO)
l. Other State assistance as necessary provided by a Gubernatorial Disaster Declaration

Federal assistance as necessary provided by a Presidential Disaster Declaration

1. Salvation Army
2. American Red Cross
3. City Contract Consultants

3. The Public Utilities Division will have the lead responsibility for the attachment and utilization of augmentation personnel from any source that may become available to respond to, or recover from any domestic incident.

4. The Public Utilities Division will participate in and coordinate with the Departments of Solid Waste Management and Parks and Recreation in all issues regarding debris management and the implementation of the **City of Houston's Debris Management Plan** (Annex W) for the purposes of clearing rights-of-way of storm generated debris and the use of pre-positioned contracts.

    1. The implementation of the City's Debris Management Plan will be done according to Annex W.

    2. Absent the activation of the City's Debris Management Plan (Annex W), debris clearing activities will be directed by the Deputy Director of the Public Utilities Division, augmented by forces from the Departments of Solid Waste Management, and Parks and Recreation.

    3. All issues concerning debris disposal will be the responsibility of the Director of the Solid Waste Management Department. This caveat holds true regardless of whether any parts of the City's Debris Management Plan (Annex W) have been implemented.

Situations and Assumptions

A. Situations

1. The Division is responsible for all issues involving mobility as regards the City's infrastructure. This includes, but is not limited to the maintenance and operation of roads, streets, bridges, and storm water drainage systems.

It is the Division's responsibility to protect the infrastructure for which it is responsible and return those infrastructure components to normal operating conditions as rapidly as possible following any domestic incident, as outlined in the Basic Plan and Annex K.

a. Domestic incidents caused by natural events, i.e., hurricanes, tornadoes, flooding, freezing/icing conditions, and other weather-related situations that could adversely affect mobility, or the supply of City services are determined the most likely to occur.

b. Man-made technology issues such as transportation incidents, accidental toxic releases from industry, toxic or non-toxic spills on the public rights-of-way, or other related events, are considered also likely to occur.

The Division has the capability both in equipment and personnel for support response to any given domestic incident when requested by first responder agencies such as the Fire and Police Departments.

The Division will respond to any emergency situation as requested and in accordance with provisions contained in the Basic Plan, Annex K, and this SOP.

Division activities in Citywide responses to any domestic incident will be conducted from the Department's Emergency Center at 5500 N. McCarty. This Center will be staffed as stated in Annex K. If, for any reason the 5500 N. McCarty Facility is unavailable for use, an alternate Emergency Center will be determined by the Director and/or designee.

B. Assumptions

1. Existing Divisional personnel will be able to handle most domestic incidents with Divisional resources.

2. When domestic incidents require resources, which exceed those of the Division, augmentation resources will be provided by the, Solid Waste Management Department, and Parks and Recreation Department.

3. A trained, equipped, and coordinated force of personnel and equipment will provide a capable response force (augmented as necessary) to conduct operations to restore the

City's infrastructure to minimize disruptions of service to the citizens, and to protect life and property, as well as actions necessary to safeguard the public health.

4. Specially trained Divisional personnel will be available to respond to domestic incidents.

5. While outside assistance will be available to respond and recover from major domestic incidents, it is essential for the Division to be prepared to carry out domestic incident responses and short-term actions on an independent basis according to provisions of the Basic Plan and Annex K.

6. It is possible for a major domestic incident to occur at any time and at any place in the City. In most cases, dissemination of warnings and increased readiness measures may be possible. However, some domestic incidents can occur with little or no warning.

7. The City and neighboring counties may be isolated for several weeks in the event of a domestic incident. This isolation can, however, be mitigated through effective communications. This potential isolation will have no effect on the immediate implementation of this SOP, as response and recovery operations begin.

8. City-wide emergency management activities will be coordinated from the Houston Emergency Center located at 5320 North Shepherd.

9. City-wide Departmental and Divisional activities will be coordinated from the Department's Emergency Facility located at 5500 N. McCarty.

IV. PHASES OF EMERGENCY MANAGEMENT

This SOP follows the Federal Emergency Management Agency's (FEMA) all-hazards approach to emergency management and outlines the four phases of approach to successfully dealing with any emergency situation. (See Basic Plan and Annex K)

A. Mitigation

Mitigation activities are defined as those designed to eliminate or reduce the effects of a potential domestic incident. These include short and long term activities that could reduce the adverse effects of known hazards as well as those of an unforeseeable nature.

1. Training of Public Utilities Division personnel in operations of their assigned tasks both in normal and domestic incidents scenarios.

2. Identify supplies, equipment, and manpower requirements necessary to respond to domestic incidents, as well as forecast situations. Said identification and planning is to assume all Public Utilities Division personnel and resources could be required to offer assistance depending upon the severity of the domestic incident. Each entity in the Public Utilities Division will create and routinely update lists of alternate vendors for critical supplies and/or services.

3. Management in Public Utilities Divisional entities will create, maintain, and routinely update an active database of personnel and equipment available to respond to any given domestic incident, as directed. Personnel lists will include the employee's assigned duty station, home address, home phone number, alternate phone number (if available), and other pertinent information needed to guarantee access to any employee. Equipment will be categorized by type, shop number, location, hauling capacity (if applicable), and general intended use.

4. Establish formal or informal mutual aid agreements with other City Departments and/or governmental agencies where appropriate, and as approved by the Mayor and Council.

5. Public Utilities Division safety personnel will undertake a program in concert with the appropriate Deputy Assistant Director to identify vulnerabilities and hazards within Public Utilities Division operations and establish methods for corrections to lessen hazards and/or liabilities.

6. Conduct Public Utilities Division exercises as needed, either independently, or in concert with the Department and/or the City's Office of Emergency Management.

7. Major facilities with emergency power generators will maintain this equipment, in conjunction with contract vendors, to insure continued operations in the event of loss of commercial power. Employee amenities, fueling capabilities, and communications are of primary concern for the need of auxiliary power. Where feasible, arrangements will be made to use temporary generators, where none are permanently installed at the direction of the Deputy Director or designee. All generators will be tested <u>under load</u> on

a tri-monthly basis. Fleet Maintenance will arrange for generator re-fueling, as needed, to ensure continued operations.

8. Make advance preparations to harden and protect facilities, where practical, against wind-borne debris through the use of hurricane shutters and/or other suitable material to cover doors and windows to ensure the integrity of all Public Utilities Division facilities housing personnel with operational responsibilities.

9. Thermally insulate and/or otherwise protect exposed water lines from the effects of temperatures at or below 32° Fahrenheit wherever possible and feasible.

10. Maintain copies and a thorough knowledge of the Finance & Administration Department's Emergency Fueling Procedures (See Appendix 1 of this SOP).

11. Maintain an aggressive program of cleaning all storm water drainage systems to reduce the threat of potential flooding during periods of heavy rainfall.

12. Make advance preparations for sheltering and feeding of on-duty personnel.

13. Develop and maintain manual operating capabilities in all phases of Public Utilities Division operations to ensure all functions will continue in the event of computer hardware or software failure.

B. Preparedness

Preparedness activities are those designed to lessen the effects of a known domestic incident and can be utilized, with the proper mitigation efforts, to lessen the effects of domestic incidents which occur with little or no warning.

a. Review and routinely update Public Utilities Division SOP's and other plans, employee and equipment rosters, facility protection devices, emergency power sources, and fueling capabilities and schedules.

b. Pre-position and secure all emergency equipment, personnel, and supplies. Staging locations at other than City-owned sites will be done at the direction of the Public Utilities Division's Deputy Director, with the approval of the Director.

c. Ensure the successful operation, under load, of all fixed and portable emergency power generation units.

d. Ensure City contract availability for supplies, parts, services, and equipment are in place and current. Verify contract availability with appropriate division.

e. Test all communications for interoperability within the Public Utilities Division, the Department, as well as with supporting Departments.

f. As situations warrant, begin the activation (minimal level) of the Department/Division Emergency Center at 5500 N. McCarty.

g. Initiate contact and review communications procedures with the Houston Emergency Center.

h. Where practical, harden all facilities against wind-borne debris and high water potentials as is necessary.

i. Maintain complete records of all expenditures of personnel time, equipment usage, materials, etc., for possible FEMA reimbursement under a Presidential Disaster Declaration. (See Appendix 2 to this SOP for the appropriate FEMA reporting forms.)

j. In a domestic incident involving a hurricane or tropical storm conditions, all outdoor activities will cease when winds speeds reach 55 miles per hour (48 knots per hour). This wind speed is a threshold measure for the safety of personnel. As conditions may vary according to the incident at hand, any requests for assistance by Public Utilities Division personnel when wind speeds approach the 55 mile per hour speed will be evaluated on urgency and personnel safety and authorized by the Director or designee.

k. Finalize provisions for the sheltering and feeding of on-duty personnel.

l. Implement and notify all personnel as to any modifications made to the City's Leave Policy as might be issued by the Administration, the Department, or the Public Utilities Division to effectively deal with a domestic incident.

m. Ensure sufficient supplies of barricades of all sizes are available in house. Make necessary preparations with vendors for additional supplies should that become necessary.

C. Response

Response activities are those which provide for the actual delivery of services during and immediately following a domestic incident. These activities are designed to assist in providing health and safety care to the citizens, reducing potential casualties, protecting property, and to facilitate both short and long term recovery.

1. No outside activities will be permitted until such time as winds speeds have dropped below 55 miles, unless authorized by the Director, the Deputy Director, or their designees.

2. All requests for Public Utilities Division assistance will be made to the Department/Division Emergency Center at 5500 N. McCarty. These requests will be catalogued and dispatched to the appropriate work force for a response.

3. The Houston Emergency Center and the Department/Division's Emergency Center will maintain constant contact as warranted.

4. When necessary, the City's Debris Management Plan will be placed into effect according to Annex W, to the extent necessary as dictated by the domestic incident.

    1. Should the scope of the emergency exceed the capabilities of force account assets to timely and effectively deal with storm-generated debris, elements of the City's Debris Management Plan (Annex W) with respects to consultants, contractors and pre-positioned contracts will be implemented.

    2. Absent the activation of the City's Debris Management Plan (Annex W), debris clearing activities will be directed by the Public Utilities Division Deputy Director and augmented by forces from the Departments of Solid Waste Management and Parks & Recreation.

    3. All issues concerning debris disposal will be the responsibility of the Director of the Department of Solid Waste Management. This caveat holds true regardless of

whether any parts of the City's Debris Management Plan (Annex W) have been implemented.

5. Restore mobility to major thoroughfares and critical facilities as rapidly as possible.

6. Secure emergency power generating equipment to facilities as needed with particular attention to fuel distribution points.

7. Catalogue and prioritize service orders for distribution to the field.

8. Request augmentation forces as needed.

9. Provide augmentation or support functions for other City Departments as requested.

10. The Public Utilities Division Deputy Director is responsible for making damage assessments to PUD facilities with said estimates forwarded to damage assessment officials according to Annex J.

D. Recovery

Recovery from a domestic incident is both a short and long term process. In the short term, activities are geared to the immediate restoration of the infrastructure and life and health safety issues. Of immediate concern is the restoration of mobility on major thoroughfares and arteries leading to critical facilities such as hospitals and medical facilities, police and fire stations, and other locations utilized by the public. Long term activities focus on returning the City to its pre-existing level of operations prior to the domestic incident. Recovery efforts can also involve mitigation activities simultaneously undertaken to recover from the existing domestic incident, while lessening the effects of a future domestic incident.

a. Complete mobility restoration and debris clearance and disposal under provisions of Annex W, with force accounts as depends upon the severity of the domestic incident.

b. Complete repairs to all infrastructure systems including storm water drainage systems, bridges, fixed facilities, and ancillary equipment.

c. Provide portable sanitary facilities as needed in conjunction with Solid Waste Management.

d. Cooperate with requesting agencies to assist in clean-up and/or decontamination work resulting from toxic or non-toxic material spills. All activities in this area of concern, regardless of time or phase of the emergency at hand will be monitored and action approved by Public Utilities Division Safety Staff in association with City environmental contractors. City employees and their equipment will not be utilized for hazardous waste collection, containment, or remediation without the express written approval of the Director or the Public Utilities Division Deputy Director. The Houston Fire Department will be the Incident Command of any such situation(s) until authority has been passed to Public Utilities Division Safety Staff and environmental contractors hired by the City.

e. Coordinate all private and volunteer efforts assigned to the Public Utilities Division as directed by the Director and/or designee.

f. Provide appropriate services to temporary shelters and/or facilities as requested and approved by the Director.

g. Continue and finalize damage assessment reports through the Public Utilities Division's Deputy Director and Resource Management-Fixed Assets representatives.

h. Continue daily collection of all personnel time, equipment usage, and all expenditures for potential reimbursement should a Presidential Disaster Declaration be made.

E. Silence of Guidelines

This SOP is designed to detail the activities of the Public Utilities Division during domestic incidents. Silence of any particular type of domestic incident guideline or mandate will be the responsibility of the Deputy Director, designee, and/or senior staff to execute according to City standards, and in the best judgment of the Director, the Deputy Director, or their designees.

V. ORGANIZATION, DIRECTION, AND CONTROL

The Public Utilities Division will bear the lead responsibility in response and recovery operations from virtually any domestic incident, especially if that incident should be weather-related in nature. It is imperative that streets be cleared for minimal mobility as rapidly as possible, especially in areas of hospitals and emergency response personnel locations (Police

and Fire stations) and other critical facilities utilized by the public. Major thoroughfares must be cleared in order that Department, Division, and augmentation personnel can report to their duty assignments. Flooding due to debris-blocked inlets and/or ditches must also be addressed for traffic flow. Barricades must be set to warn motorists of hazards that cannot be quickly rectified. Sufficient fuel must be available for continuing equipment operations.

This SOP is written under the "all hazards" approach to emergency management wherein planning considerations for one domestic incident may be adapted to another.

The Director, the Deputy Director of the Public Utilities Division, and Public Utilities Division management will adapt this SOP to fit the situation(s) at hand in order to execute an effective response to any domestic incident.

Regardless of the overall scope of the emergency situation, the Public Utilities Division will be coordinated and directed from the 5500 N. McCarty Facility, which also serves as the Department's Emergency Facility. The lines of communication (Direction and Control) will flow as indicated:

City Emergency Operations Center
Houston Emergency Center
⇓

Department's Emergency Facility
5500 N. McCarty
(if activated)
⇓

Communications during a domestic incident will utilize the 24-hour number at 5500 N. McCarty of 713-678-5800 until emergency numbers are activated and published. The Deputy Director will be informed by Coordinator personnel at the Houston Emergency Center on situations where the Department/Division's EOC is not activated or while the McCarty Facility is in the process of being staffed. When staffed, the McCarty Facility will receive information from the Houston Emergency Center and said information will be passed to the appropriate Division, Branch, or Section for a response.

These SOP's are written to encompass a major domestic incident affecting widespread areas of the City. They may be downsized to deal just as effectively with a more localized domestic incident.

VI. COMMAND AND MANAGEMENT

The Public Utilities Division is responsible for providing the services to its citizens on which they depend for public health and safety, mobility, and other services that affect quality of life. The Division has the responsibility to lead or assist in the restoration of basic services to accomplish the above in the event of a domestic incident. The National Incident Management System (NIMS) will be used to manage and efficiently mitigate any such incident by integrating a combination of facilities, equipment, personnel, procedures, and communications into a common organizational structure. NIMS is used to organize both near-term and long-term field level operations for a broad spectrum of emergencies, from small to complex incidents, both natural and manmade.

NIMS has five major functions:

1. **Incident Command (IC)** can be conducted in two ways. **Single Command IC** – no overlap of jurisdictional or functional overlap or **Unified Command** – multi-jurisdictional or multi-agency functions.

   1.1 In a **Single Command IC** structure within the Department, the Director of Public Works and Engineering or designee will be the **Incident Commander**. The command staff will include, but not be limited to: **Public Information Officer** (Department of Public Works & Engineering PIO) who is responsible for single or joint communications to the public and media, **Safety Officer** (senior safety person on site) who monitors the incident and acts as advisor to IC on all matters relating to operational safety, and **Liaison Officer** (Emergency Management Coordinator supported by the Chief of Staff) who serves as the point of contact with representatives of other governmental agencies, non-governmental organizations, and/or private entities.

   1.2 In a **Unified Command IC** structure, the department is acting in a multi-agency manner. The Director and the PWE Emergency Management Coordinator will report to the Houston Emergency Center (HEC) to support the city's designated

Incident Commander. The Director of Public Works and Engineering will designate a senior staff member to oversee the operations of the DEC. The command staff at the DEC will include, but not be limited to: **Public Information Officer** (Department of Public Works & Engineering PIO) who is responsible for single or joint communications to the public and media, **Safety Officer** (senior safety person on site) who monitors the incident and acts as advisor to DEC commander on all matters relating to operational safety, and **Liaison Officer** (Department Chief of Staff) who serves as the point of contact with representatives of other governmental agencies, non-governmental organizations, and/or private entities.

2. **Operations Section** is a joint responsibility of the Deputy Directors of Right-of-Way & Fleet Maintenance, Traffic & Transportation and the Public Utilities Divisions. They are responsible for all activities focused on the reduction of the immediate hazard, saving lives and property, establishing situational control, and restoration of normal operations.

3. **Planning Section** is assigned by the IC to collect, evaluate, and disseminate incident situation information. This function can be placed in other sections according to the needs of the IC. Consideration should be given to manager or above classification with control of these types of resources.

4. **Logistics Section** is responsible for all support requirements needed to facilitate effective and efficient incident management, including ordering resources from off-incident locations. It also provides facilities, transportation, supplies, equipment maintenance and fuel, food services, communications and information technology support, and emergency responder medical services as required. Consideration should be given to manager or above classification with control of these type resources.

5. **Finance & Administration Section** is the responsibility of the Deputy Director of Resource Management Division. Primary responsibility is established when the agency(s) involved in incident management activities require(s) finance and other administrative support.

VII. INCREASED READINESS CONDITIONS

Increased Readiness Conditions for the Department are set forth in Section VII of Annex K.

Increased Readiness Conditions for the Division are broken down by time frames determined by potential disaster vulnerabilities as relates to hurricanes or other tropical weather situations. These time frames allow sufficient time for planning and preparations to get underway and be successfully concluded by a storm's arrival. For planning purposes, the Division will utilize the map coordinates of Longitude 80° West, Latitude 20° North, for a beginning point. In terms of hurricane preparedness, this is the point at which underwriters associated with FEMA's National Flood Insurance Program cease to write flood insurance policies. In view of the realization that tropical weather systems may generate suddenly and within the boundaries set forth above, all divisional entities will maintain a readiness level of Condition 4 as described below during hurricane season from June 1st to November 30th of each year. For this reason, and depending upon where a tropical system might form, advanced readiness conditions may have to be compressed and activities hastened to completion.

A. Condition 4 (72 to 48 hours prior to estimated landfall)

1. Review Annex K and this SOP for implementation of actions.

2. Make the necessary arrangements to top-off all underground and emergency generator fuel storage tanks according to provisions contained in the Finance & Administration's Fuel Ordering Procedures and the PUD Deputy Director's instructions as contained in Appendix 2 of this SOP.

3. The PUD Deputy Director will brief the ROW/FM Division Staff on the nature of the domestic incident.

4. Review and update as necessary the employee notification process as well as employee duties and assignments.

5. Review equipment inventories and status. Make the necessary arrangements with Fleet Maintenance and/or vendors to expedite pending repairs to priority equipment such as debris handling vehicles (Gradalls, front-end loaders, etc.), hauling equipment (dump trucks, etc.), and other high profile rolling stock. Begin coordination with Fleet Management to install necessary attachments on applicable front-end loaders.

6. Begin a thorough test of all communications systems.

7. Review inventory of emergency supplies and materials necessary to meet the threat of the domestic incident. Expedite re-stocking as necessary.

8. Initiate contact with Bridge Maintenance regarding the hardening of critical facilities against wind-borne debris. The PUD Deputy Director and/or designee will make a determination as to when preventive measures will be installed.

9. Begin plans for the activation of the McCarty Emergency Center based upon the threat at hand.

10. Begin testing of auxiliary power supplies.

11. Contact augmentation forces from the Solid Waste and Parks and Recreation Departments as necessary.

12. Beginning immediately, and until the emergency threat no longer exists, quantities of fuel on hand (both unleaded gasoline and diesel) in underground tanks will be reported each day to Deputy Director.

13. Initiate planning for personnel and equipment decentralization.

14. Advise all personnel to initiate preparations for home and family protection.

15. Contact all off-duty personnel and place on stand-by status to report for duty.

16. Begin checking of all small equipment (chain saws, etc.) for proper operation.

B. Condition 3 (48 to 32 hours from estimated landfall)

1. The PUD Deputy Director will update the Public Utilities Division staff on the threat and potential of the domestic incident and its likely impact on the Public Utilities Division.

2. Continue with procedures for emergency fuel ordering and reporting of quantities on hand.

3. Continue with provisions for the hardening and protection of critical facilities as determined by the PUD Deputy Director. Initiate the decentralization of personnel and equipment from facilities classified as non-critical.

4. Continue and finalize personnel contact list updates. Maintain contact with off-duty personnel with instructions to report for duty at the direction of the Public Utilities Division Deputy Director.

5. Finalize plans for staging of personnel and equipment at alternate locations.

6. Advise employees of the latest information on the threat and that their personal preparations should be nearing conclusion.

7. Correct any difficulties in equipment status or material supplies.

8. Finalize preparations for the activation of the McCarty Emergency Facility with the layout complete, telephones, radio(s), and fax machines in place, and a telephone number directory available for distribution as necessary.

9. Continue coordination with Fleet Management for priority equipment repair and the installation of debris handling devices on appropriate equipment.

C. Condition 2 (32 hours to 24 hours from estimated landfall)

1. The Public Utilities Division Deputy Director will begin making final preparations with Division Staff.

2. Finalize installation of protective materials at critical facilities to protect against wind-borne debris.

3. Senior Staff will begin making final preparations with their employees including shift assignments and reporting instructions. Off-duty personnel will be contacted as to reporting instructions.

4. At the discretion of the Public Utilities Division Deputy Director, and in the absence of any Administration or Executive Order altering the official City Leave Policy, all voluntary leaves will be cancelled.

5. All fuel tanks should be topped off according to Emergency Fuel Ordering Procedures. Daily reporting will continue.

6. All loose materials and equipment at all facilities will be secured.

7. The McCarty Emergency Center will be staffed at a minimal level at the discretion of the Public Utilities Division Deputy Director.

8. Complete the installation of all grapples and other debris handling devices on appropriate equipment.

D. Condition 1 (12 hours to 6 hours prior to estimated landfall)

1. The McCarty Emergency Center is now fully activated and staffed.

2. The Public Utilities Division is now on 24-hour operation with 2, twelve-hour shifts.

3. All personnel and equipment are in place at their assigned locations in preparation for responding at the directed time.

4. All personnel have been briefed on the scope and extent of the domestic incident.

5. The Public Utilities Division is now in a stand-by mode for the domestic incident.

VIII. CONTINUITY OF GOVERNMENT

1. General

IX. Continuity of government for the Department is set forth in Annex K.

X. The Director has overall responsibility for the operation of all facets of the Department.

2. Division

A. The Deputy Director of the Public Utilities Division has the overall responsibility for the operation and line of succession for the Public Utilities Division with the concurrence of the Director.

B. The PUD Deputy Director has the authority to appoint a member of Division staff as a designee for the purposes of directing Public Utilities Division operations in absence.

1. **ADMINISTRATION AND SUPPORT**

Administration and support functions are set forth in Annex K.

1. **Divisional Administration**

   a. Annex K and this SOP establishes priorities to ensure the effective and efficient utilization of the Public Utilities Division's resources of personnel and equipment.

   b. The PUD Deputy Director will recommend approval to the Director of contractual arrangements and coordinate procedures with private companies and mutual aid agreements (with subsequent approval by the Mayor and Council) with public entities to assist the Public Utilities Division in responding to the effects of a domestic incident.

2. **Supply and Support**

   a. All requests for supplies, support equipment, materials, or specialized services will fall under emergency purchasing provisions of Strategic Purchasing and will be procured on an expedited basis and furnished without delay at the direction of the requesting Division. Resource Management will facilitate the securing of these referenced good and services as expeditiously as possible.

   b. The need for contracts for specialized services, equipment repair, the sheltering and feeding of on-duty personnel, and other recovery related issues will need expedient processing by Resource Management and Strategic Purchasing Divisions. These requests will be forwarded to the Director by the PUD Deputy Director or designee for approval for processing by Resource Management and/or Strategic Purchasing.

3. **Reports and Records**

   a. Required reports will be submitted to the appropriate authorities in accordance with requests and as are authorized in the Basic Plan and Annex K.

   b. The PUD Deputy Director will ensure the maintenance and safeguarding of all records essential to the Public Utilities Division's successful and continued operations.

2. ANNEX DEVELOPMENT

The PUD Deputy Director will be responsible for the development and maintenance of this SOP. This SOP will be reviewed annually and updated as necessary.

APPENDIX O

CITY OF HOUSTON, SECTIONS OF UTILITY MAINTENANCE FIELD POLICY MANUAL

ROUTINE VALVE ASSISTANCE REQUEST (NON-EMERGENCY JOBS)

Step 1.

a. The City Inspector shall schedule a work order planning meeting by calling the Central Operation Service (COS) at **(713) 295-5598** a minimum of 3 days in advance (excluding weekends, holidays, inclement weather days, and the day of the call) and providing the following information:

Location of Work (Street Intersection)	Project #
Project Description	Contractor (Company Name)
Job Superintendent's Name	Superintendent's Office #/Mobile #/Pager #
Contractor's Emergency Information	Name and Phone #/Mobile #/Pager #
City Inspector/Senior Inspector	Name and Phone #/Mobile #/Pager #
Date and Time assistance is requested	

b. The COS will create a work order for each wet connection, cut and plug, etc. which will be designated as a "Code 40" (Private Contractor).

c. The COS will give the City Inspector the work order number. This work order number must be used as a reference in all communications regarding this request for Valve Assistance.

d. The valve personnel must have the work order number on the route sheet. When the valve personnel arrive at the job site for the **WORK ORDER PLANNING MEETING** (between the City Inspector, Contractor, and the Utility Maintenance valve personnel), he/she should verify the street intersection and work order number with the City Inspector before beginning the **WORK ORDER PLANNING MEETING.**

e. During the **WORK ORDER PLANNING MEETING** between the City Inspector, Contractor, and the Utility Maintenance valve personnel, the work to be performed will be outlined and **the actual date the work is to be performed will be mutually determined**

by the City Inspector and the Utility Maintenance valve personnel, based upon relevant factors such as preparatory work needed, customer requirements, etc.

f. The valve personnel will perform the work specifically outlined in the work order requested. Also, the Utility Maintenance Branch valve personnel will only operate the existing water valves. The City Inspector must contact COS and request a new work order for additional work.

g. The valve personnel will contact the dispatcher and advise when the job is complete. Valve personnel will list all appropriate information on the Team Activity Report.

Step 2. Should valve personnel not be able to keep an appointment to provide valve assistance, Utility Maintenance Branch will provide notification to the appropriate City Inspector by phone at least 24 hours prior, with that fact and rescheduling information, if available.

Step 3. The City Inspector will notify COS if the valve personnel have not arrived at the site within 30 minutes of the scheduled appointment.

Step 4. The Contractor will not be due delay claims or downtime if Utility Maintenance Branch has notified the City Inspector that they will not be able to provide the valve assistance as scheduled.

Step 5. Test new valves installed in the presence of the City Inspector before the substantial completion inspection is scheduled. Place new valves in the open position at or before substantial completion.

Step 6. Construction Division will notify in writing to the Utility Maintenance 2 months before the warranty expires to report any problems they have with the new water lines. Construction Division will notify Contractor about the problems.

EMERGENCY REQUEST FOR VALVE ASSISTANCE PROCEDURE

Step 1. The City Inspector will request emergency Valve Assistance due to a broken main/service, etc. by calling COS at **(713) 295-5598** provide the following information:

Location of Work (Street Intersection)	Project #
Project Description	Contractor (Company Name)
Job Superintendent's Name	Superintendent's Office #/Mobile #/Pager #
Contractor's Emergency Information	Name and Phone #/Mobile #/Pager #
City Inspector/Senior Inspector	Name and Phone #/Mobile #/Pager #
Date and Time assistance is requested	

Step 2. COS will create an emergency work order number and describe the work to be performed.

Step 3. COS will give the City Inspector the emergency work order number. Reference work order number in all communications regarding request for Valve Assistance.

Step 4. COS will contact the designated valve personnel and assign the emergency work order. The dispatcher will follow the standard COS procedures if this situation occurs after normal working hours.

Step 5. The valve personnel must have the emergency work order number on the route sheet. When the valve personnel arrive at the job site for the emergency work, he/she should verify the street intersection and the emergency work order number with the City Inspector prior to beginning the work requested for operating the existing water valves. The valve personnel will coordinate the verification of the street intersection and the work order number with City Inspector prior to performing the work.

LANDSCAPING

NOTE: LANDSCAPING SUPERVISOR SHOULD INVESTIGATE JOB TO SET REQUIREMENTS PRIOR TO SCHEDULING TEAM.

1.0 YARD VERIFICATIONS:

1.1 Team ensures receipt of work orders and pre-repair photos as a guide for restoration.

1.2 Team ensures that all required tools, equipment, and material are on truck prior to

departing yard.

1.3 Team performs required vehicle inspections.

1.4 Team receives additional instructions and departs to work site in timely manner.

1.5 Notify Central Operations Section (COS) of in-service.

2.0 SITE ARRIVAL:

2.1 Notify COS of arrival.

2.2 Perform routine safety precautions and secure work site. Use proper personal protective equipment.

2.3 TRAFFIC SAFETY:

2.3.1 Position safety cones and signs in accordance with Texas Manual on Uniform Traffic Control Devices for Streets and Highways.

2.3.2 Position vehicle to protect team from traffic.

2.3.3 Do not let vehicle idle unattended.

2.3.4 Post flagman if necessary.

2.3.5 If traffic control assistance needed, call COS.

3.0 CUSTOMER CONTACT:

3.1 Make Customer(s) Contact. Identify yourself as a City of Houston Utility Maintenance employee and nature of service you will be providing.

3.2 Explain where work will be performed (i.e. landscaping, etc.).

3.3 Inform customer(s) approximate length of time you will be working at site.

3.4 Discuss with customer(s) any special precautions such as small children, dogs, and fences. Additionally, request pets be placed inside, if needed, to avoid injury or pet escaping from yard.

3.5 Leave door-hanger if customer(s) not available.

3.6 Repeat customer contact as required.

3.7 If more than one day required, make customer(s) contact each day.

4.0 WORK SITE APPEARANCE:

4.1 Team shall maintain a safe, neat, professional work site throughout the completion of job.

5.0 WORK IDENTIFICATION:

5.1 Team Leader and Team should identify work to be completed.

5.2 Team leader takes photos before work begins. Attach digital image to work order in IMS at end of shift.

6.0 LANDSCAPING:

6.1 Restore to original grade and appearance using like material.

6.2 Soil should be evenly graded, raked.

6.3 Sod should be solid, evenly graded and alive. (Do not install dormant or dead sod!)

6.4 Precautions should be taken with sprinkler systems.

6.5 City will replant only original plant, or in kind replacements, in easement.

7.0 CLEANUP:

7.1 Leave street clean. Leave yard free of building materials, tools, dirt and concrete chunks.

7.2 Secure job site if there is any work pending.

7.3 Work site should be completed and free of debris, except for pending concrete or shrubbery work.

7.4 Photograph repair site, curbside loading area, and haul routes through private

property.

8.0 MAKE FOLLOW-UP CUSTOMER CONTACT:

8.1 Notify customer(s) that landscaping is completed.

8.2 Notify customer(s) of any additional work necessary.

8.3 If customer(s) expresses displeasure with landscaping, have them contact supervisor.

8.4 Use door-hangers if customer(s) not at home.

8.5 Request that customer(s) continue to irrigate after planting. (CITY WILL NOT RETURN TO WATER PLANTS.)

9.0 BARRICADES:

9.1 The person reporting a job complete is responsible for picking up all barricades and all signs and returning them to the Quadrant.

10.0 UPDATE COS:

10.1 Give pertinent data concerning job.

10.2 Give team departure time.

11.0 TEAM LEADER UPDATES WRITTEN REPORT with:

11.1 Times.

11.2 Material Usage.

11.3 Equipment.

11.4 Report shall be turned into Planner / Scheduler at end of shift.

CONCRETE/ASPHALT SUPERVISOR

1.0 RECEIVE WORK FROM IMS:

1.1 Visually inspect job site.

2.0 CHECK WORK TO BE DONE:

2.1 Size of cut, amount of concrete or asphaltic pavement to be restored per City Street Cut Ordinance requirements.

2.2 Grading.

2.3 Fill requirements and compaction (Sand, crushed rock, limestone).

2.4 Lumber size and amounts.

2.5 Reinforcement.

2.6 Expansion joint layout.

2.7 Drainage.

2.8 Special finish requirements (e.g.; Pea-gravel, Rainbow, Dyes).

2.9 Safety and traffic considerations.

3.0 CONSIDERATIONS FOR CONCRETE POUR:

3.1 Weather.

3.2 Quality of concrete at each site.

3.3 In-house or contract delivery.

3.4 Type of pour required.

3.4.1 Hand mix

3.4.2 Transit mix, etc.

4.0 INPUT WORK REQUIREMENTS IN IMS:

5.0 SCHEDULE TEAM, EQUIPMENT, AND MATERIALS:

5.1 Explain job requirements and proper tools needed.

5.2 Weather must be above 32 degrees and not raining.

5.3 Explain potential problems or considerations (Sprinklers, etc.).

5.4 Order concrete or asphalt, Grade D.

6.0 MAKE CUSTOMER CONTACT IF SCHEDULE IS DELAYED OR CHANGED:

7.0 CHECK JOBS IN PROGRESS AND AFTER COMPLETION:

7.1 Ensure proper barricades, cones, tape, etc. are in place.

7.2 Ensure curing compound is used.

8.0 PERFORM FINAL INSPECTION AFTER POUR FOR QUALITY ASSURANCE:

8.1 Make customer contact to confirm satisfaction.

8.2 Update work order through IMS for landscape requirements.

FORM TEAM

1.0 YARD VERIFICATIONS:

1.1 Team ensures receipt of work orders and instructions from supervisor.

1.2 Team ensures that all required tools, equipment, and material are on truck prior to departing yard.

1.2.1 Typical tools, equipment, and materials include:

1.2.1.1 Proper fill material, if required.

1.2.1.2 Compaction equipment.

1.2.1.3 Grading equipment (box blade, backhoe, etc.) if required.

1.2.1.4 Lumber, expansion joints, etc.

1.2.1.5 Hand tools and power tools.

1.2.1.6 Reinforcing rods and/or wire.

1.3 Team performs required vehicle inspections.

1.4 Team receives additional instructions and departs to work site in timely manner.

1.5 Notify Central Operations Section (COS) of in-service.

2.0 SITE ARRIVAL:

2.1 Notify COS of arrival.

2.2 Perform routine safety precautions and secure work site. Use proper personal protective equipment.

2.3 TRAFFIC SAFETY:

2.3.1 Position safety cones and signs in accordance with Texas Manual on Uniform Traffic Control Devices for Streets and Highways.

2.3.2 Position vehicle to protect team from traffic.

2.3.3 Do not let vehicle idle unattended.

2.3.4 Post flagman if necessary.

2.3.5 If traffic control assistance needed, call COS.

3.0 CUSTOMER CONTACT:

3.1 Make Customer(s) Contact. Identify yourself as a City of Houston Utility Maintenance employee and nature of service you will be providing.

3.2 Explain where work will be performed.

3.3 Inform customer(s) approximate length of time you will be working at site.

3.4 Remind customer(s) to relocate car, etc. so they will not be blocked in by work.

3.4.1 Check with customer(s) for special access requirements such as disabled customers or planned deliveries.

3.5 Discuss with customer(s) any special precautions such as small children, dogs, and fences. Additionally, request pets be placed inside, if needed, to avoid injury or pet escaping from yard.

3.6 Leave door-hanger if customer(s) not available.

3.7 Repeat customer contact as required.

3.8 If more than one day required, make customer contact each day.

4.0 WORK SITE APPEARANCE:

4.1 Team shall maintain a safe, neat, professional work site throughout the completion of job.

5.0 WORK IDENTIFICATION:

5.1 Team Leader and Team should identify work to be completed.

5.2 Team leader takes photos before work begins. Attach digital image to work order in IMS at end of shift.

6.0 FORM WORK:

6.1 Remove and dispose of any temporary surfacing material.

6.2 Grade/level ground.

6.3 Inspect existing base. Install and compact additional base with tampers, if required. Compact until no further volume reduction occurs. Base material shall be crushed limestone and extend 12 inches below bottom of pavement.

6.4 All jagged edges on driveways, sidewalks, streets, curbs, etc. will be saw cut to

ensure that proper and neat edges may be installed.

6.5 Install straight, strong forms, expansion joints and reinforcement.

6.6 Expansion joints every six feet on sidewalks, and ten feet on driveways and streets.

6.7 In driveways and sidewalk, 3/8" rebar is to be used and elevated half the depth of cuts with chairs.

6.8 In streets, steel size should match existing steel size and spacing, in cut, steel should be elevated half the depth of cut with high chairs. Drill dowel holes 6" into adjacent pavement if old steel is not exposed and install dowels with epoxy.

7.0 CLEANUP:

7.1 Leave job site well marked for safety and completely ready for concrete pour. All debris shall be removed from area of pour.

7.2 Leave street clean. Leave yard free of building materials, tools, dirt and concrete chunks.

7.3 Secure job site if there is any work pending.

7.4 Photograph site.

8.0 MAKE FOLLOW-UP CUSTOMER CONTACT:

8.1 Notify customer(s) that work is completed.

8.2 Notify customer(s) of any additional work necessary (i.e. when concrete will be poured).

8.3 Use door-hangers if customer(s) not at home.

9.0 UPDATE COS:

9.1 Give pertinent data concerning job.

9.2 Give team departure time.

10.0 TEAM LEADER UPDATES WRITTEN REPORT with:

10.1 Times.

10.2 Material Usage.

10.3 Equipment.

10.4 Report shall be turned into Planner / Scheduler at end of shift.

CONCRETE TEAM

1.0 YARD VERIFICATIONS:

1.1 Team ensures receipt of work orders and instructions from supervisor. Coordinate concrete delivery.

1.2 Team ensures that all required tools, equipment, and material are on truck prior to departing yard.

1.3 Team performs required vehicle inspections.

1.4 Team receives additional instructions and departs to work site in timely manner.

1.5 Notify Central Operations Section (COS) of in-service.

2.0 SITE ARRIVAL:

2.1 Notify COS of arrival.

2.2 Perform routine safety precautions and secure work site. Use proper personal protective equipment.

2.3 TRAFFIC SAFETY:

2.3.1 Position safety cones and signs in accordance with Texas Manual on Uniform Traffic Control Devices for Streets and Highways.

2.3.2 Position vehicle to protect team from traffic.

2.3.3 Do not let vehicle idle unattended.

2.3.4 Post flagman if necessary.

2.3.5 If traffic control assistance needed, call COS.

3.0 CUSTOMER CONTACT:

3.1 Make Customer(s) Contact. Identify yourself as a City of Houston Utility Maintenance employee and nature of service you will be providing.

3.2 Explain where work will be performed.

3.3 Inform customer(s) approximate length of time you will be working at site.

3.4 Remind customer(s) to relocate car, etc. so they will not be affected by work.

3.5 Discuss with customer(s) any special precautions such as small children, dogs, and fences. Additionally, request pets be placed inside, if needed, to avoid injury or pet escaping from yard.

3.6 Leave door-hanger if customer(s) not available.

3.7 Repeat customer contact as required.

3.8 If more than one day required, make customer contact each day.

4.0 WORK SITE APPEARANCE:

4.1 Team shall maintain a safe, neat, professional work site throughout the completion of job.

5.0 WORK IDENTIFICATION:

5.1 Team Leader and Team should identify work to be completed.

5.2 Team leader takes photos before work begins. Attach digital image to work order in IMS at end of shift.

6.0 CONCRETE WORK:

6.1 Weather must be above 32 degrees and not raining.

6.2 Use 3/8" rebar when replacing concrete driveways and sidewalks as a result of utility repairs.

6.3 Observe concrete quality at time of delivery.

6.3.1 Concrete not hot.

6.3.2 Neither too stiff nor too fluid.

6.4 Ensure expansion joints are placed every six feet for sidewalk and every ten feet for driveways.

6.5 Ensure reinforcement is properly placed using concrete chairs, not on the ground. Never 'hook up' rebar.

6.6 Restore to original grade and appearance using like materials, (color, etc.) Pea-gravel, rainbow and finish.

6.7 Ensure proper use of trowels and edgers.

6.8 Apply curing compound.

6.9 Set barricades with lights, use safety tape to secure area around pour.

6.10 **DO NOT DAMAGE LAWNS, ETC. WITH HEAVY EQUIPMENT.**

7.0 CLEANUP:

7.1 Leave job site well marked for safety.

7.2 Leave street clean. Leave yard free of building materials, tools, dirt and concrete chunks.

7.3 Secure job site if there is any work pending.

7.4 Photograph site.

8.0 MAKE FOLLOW-UP CUSTOMER CONTACT:

8.1 Notify customer(s) that work is completed.

8.2 Notify customer(s) of any additional work necessary.

8.3 Notify customer(s) that concrete work has been completed and that no traffic should be allowed on driveway for three (3) days or it will crack.

8.4 Advise that barricades and tape are set to protect the area.

8.5 Advise customer(s) that a team will return in two or three days to pull forms, collect barricades and finish any landscaping work, if necessary.

8.6 Use door-hangers if customer(s) not at home.

9.0 UPDATE COS:

9.1 Give pertinent data concerning job.

9.2 Give team departure time.

10.0 TEAM LEADER UPDATES WRITTEN REPORT with:

10.1 Times.

10.2 Material Usage.

10.3 Equipment.

10.4 Report shall be turned into Planner / Scheduler at end of shift.

ASPHALT TEAM

1.0 YARD VERIFICATIONS:

1.1 Team ensures receipt of work orders and instructions from supervisor.

1.1.1 Supervisor arranges pick up of asphalt.

1.2 Team ensures that all required tools, equipment, and material are on truck prior to departing yard.

1.3 Team performs required vehicle inspections.

1.4 Team receives additional instructions and departs to work site in timely manner.

1.5 Notify Central Operations Section (COS) of in-service.

2.0 SITE ARRIVAL:

2.1 Notify COS of arrival.

2.2 Perform routine safety precautions and secure work site. Use proper personal protective equipment.

2.3 TRAFFIC SAFETY:

2.3.1 Position safety cones and signs in accordance with Texas Manual on Uniform Traffic Control Devices for Streets and Highways.

2.3.2 Position vehicle to protect team from traffic.

2.3.3 Do not let vehicle idle unattended.

2.3.4 Post flagman if necessary.

2.3.5 If traffic control assistance needed, call COS.

3.0 CUSTOMER CONTACT:

3.1 Make Customer(s) Contact. Identify yourself as a City of Houston Utility Maintenance employee and nature of service you will be providing.

3.2 Explain where work will be performed.

3.3 Inform customer(s) approximate length of time you will be working at site.

3.4 Remind customer(s) to relocate car, etc. so they will not be affected by work.

3.5 Discuss with customer(s) any special precautions such as small children, dogs, and fences. Additionally, request pets be placed inside, if needed, to avoid injury or pet escaping from yard.

3.6 Leave door-hanger if customer(s) not available.

3.7 Repeat customer contact as required.

3.8 If more than one day required, make customer contact each day.

4.0 WORK SITE APPEARANCE:

4.1 Team shall maintain a safe, neat, professional work site throughout the completion of job.

5.0 WORK IDENTIFICATION:

5.1 Team Leader and Team should identify work to be completed.

5.2 Team leader takes photos before work begins. Attach digital image to work order in IMS at end of shift.

6.0 ASPHALT WORK:

6.1 Weather must be above 32 degrees and not raining.

6.2 If base is crushed limestone (not concrete) do a thorough surface compaction with tamper to ensure a firm base. If base is not proper, do not place asphalt, have base re-done.

6.3 Base shall be concrete only if existing pavement is concrete with an asphalt overlay.

6.4 Apply adequate Tack-coat RC-2 to cover crushed rock base.

6.5 Apply asphalt to site.

6.5.1 Shovel asphalt in place.

6.5.2 Use shovels and rakes to level asphalt to road grade.

6.5.3 Compact and add asphalt to grade as needed to maintain road grade.

6.6 Barricade and mark job site and allow to cool for one hour.

7.0 CLEANUP:

7.1 Leave job site well marked for safety.

7.2 Leave street clean. Leave yard free of building materials, tools, dirt and concrete chunks.

7.3 Secure job site if there is any work pending.

7.4 Photograph site.

8.0 MAKE FOLLOW-UP CUSTOMER CONTACT:

8.1 Notify customer(s) that work is completed.

8.2 Notify customer(s) of any additional work necessary.

8.3 Advise that barricades and tape are set to protect the area and will be removed.

8.4 Advise customer(s) that a team will return in two or three days to finish any landscaping work, if necessary.

8.5 Use door-hangers if customer(s) not at home.

9.0 UPDATE COS:

9.1 Give pertinent data concerning job.

9.2 Give team departure time.

10.0 TEAM LEADER UPDATES WRITTEN REPORT with:

10.1 Times.

10.2 Material Usage.

10.3 Equipment.

10.4 Report shall be turned into Planner / Scheduler at end of shift.

11.0 BARRICADES:

11.1 Supervisor will arrange for barricades to be removed and area opened to traffic as soon as possible.

LEAK SURVEY TEAM

1.0 YARD VERIFICATIONS:

1.1 Team ensures receipt of work orders and instructions from supervisor.

1.2 Team ensures that all required tools, equipment, and material are on truck prior to departing yard.

1.3 Team performs required vehicle inspections.

1.4 Team receives additional instructions and departs to work site in timely manner.

1.5 Notify Central Operations Section (COS) of in-service.

2.0 SITE ARRIVAL:

2.1 Notify COS of arrival.

2.2 Perform routine safety precautions and secure work site. Use proper personal protective equipment.

2.3 TRAFFIC SAFETY:

2.3.1 Position safety cones and signs in accordance with Texas Manual on Uniform Traffic Control Devices for Streets and Highways.

2.3.2 Position vehicle to protect team from traffic.

2.3.3 Do not let vehicle idle unattended.

2.3.4 Post flagman if necessary.

2.3.5 If traffic control assistance needed, call COS.

3.0 CUSTOMER CONTACT:

3.1 Make Customer(s) Contact. Identify yourself as a City of Houston Utility Maintenance employee and nature of service you will be providing.

3.2 Explain where work will be performed.

3.3 Inform customer(s) approximate length of time you will be working at site.

3.4 Discuss with customer(s) any special precautions such as small children, dogs, and fences. Additionally, request pets be placed inside, if needed, to avoid injury or pet escaping from yard.

3.5 Leave door-hanger if customer(s) not available.

3.6 Repeat customer contact as required.

3.7 If more than one day required, make customer contact each day.

4.0 WORK SITE APPEARANCE:

4.1 Team shall maintain a safe, neat, professional work site throughout the completion of job.

5.0 WORK IDENTIFICATION:

5.1 Team Leader and Team should identify work to be completed.

6.0 DETECTION WORK:

6.1 Teams or surveyors should begin process of locating problem area.

6.2 Surveyor will perform a thorough listening survey for leak sound and identify leak sound areas that require pinpointing.

6.3 Leak Detection team will detect leak sound reported by Perma log and surveyors for pinpointing with correlator for accuracy and mark leak location with white paint.

6.4 Make leak detection report & sketch.

6.5 Forward report to Quadrant.

7.0 CLEANUP:

7.1 Leave job site well marked for safety.

7.2 Leave street clean. Leave yard free of building materials, tools, dirt and concrete

chunks.

7.3 Secure job site if there is any work pending.

8.0 MAKE FOLLOW-UP CUSTOMER CONTACT:

8.1 Notify customer(s) that work is completed.

8.2 Notify customer(s) of any additional work necessary.

8.3 Use door-hangers if customer(s) not at home.

9.0 UPDATE COS:

9.1 Give pertinent data concerning job.

9.2 Give team departure time.

10.0 TEAM LEADER UPDATES WRITTEN REPORT with:

10.1 Times.

10.2 Material Usage.

10.3 Equipment.

10.4 Update work order in IMS.

NOTIFICATION TO CITIZENS WHEN WATER IS SHUT OFF

1.0 PURPOSE:

1.1 To establish uniform procedures for notification to citizens before water is shut off.

2.0 POLICY:

2.1 When an interruption of water service is caused due to a **routine** water repair and/or wet connection, it is mandatory that the customers in that area be notified, in person or by a note left at their door, BEFORE the water is turned off. Particular attention should be given to interrupting water service in areas where life-supporting machinery is used and/or any other equipment dependent on water for its safe operation.

Examples of this machinery and equipment include but are not limited to kidney dialysis machines, boilers, hair salons, etc.

2.2 When an interruption of water service is caused due to an **emergency** water repair and/or wet connection, customers in that area be notified, if possible, BEFORE the water is turned off.

2.3 When water valves are closed for any reason, the valves must be turned **FULLY** open as soon as the job is completed.

2.4 **BEFORE** leaving the job site, a **SECOND** check must be made to be sure everyone is back in service.

2.5 If further information is required, the immediate supervisor is to be contacted.

3.0 COMPLIANCE:

3.1 Adherence to the above is mandatory. Any employee who violates this policy may be subject to disciplinary action.

PROTECTION OF LIFE SUPPORT SYSTEMS

1.0 PURPOSE:

1.1 To ensure uninterrupted water service to "protected addresses" such as those of hospitals, dialysis centers and home dialysis machine users.

2.0 PROCEDURE:

2.1 Updated lists of "protected addresses" will be provided to Central Operations Section (COS) by Utility Customer Service. Copies will be distributed monthly to valve personnel and supervisors.

2.2 When a new "protected address" is added to the list, a work order will be issued within one (1) work day to do the following:

2.2.1 Visit the "protected address" (valve supervisor) to explain to occupants our steps to ensure uninterrupted water service. Show them the positive valve safety that will be inserted in all valves that affect the address. Ask/receive

permission to do a test cut to verify valves. Provide them with a card with the COS telephone number.

2.2.2 Verify valves that affect the address. Insert positive valve safety in each stack. Positive valve safety will be a red painted valve cover.

2.2.3 Return to the address to verify that the service is on.

2.2.4 Sign and date completed work order. COS will keep this on file as long as the address is on the protected list.

3.0 RED VALVES:

3.1 If a "RED VALVE" must be cut for any reason, the valve person must first get the clear permission of a responsible person at the "protected address" and the COS supervisor. COS will log the date, time on/off, and the name of the person contacted at the "protected address".

3.2 Customer(s) will be notified before turning water back on.

4.0 DELETING PROTECTED ADDRESSES FROM LIST:

4.1 When a "protected address" is deleted from the list by Utility Customer Service, a work order will be created by COS.

4.2 An investigator will visit the address to verify that a dialysis machine is no longer in use there.

4.3 An investigator will remove the red positive valve safety and install a blue valve cover.

4.4 An investigator will sign work order as completed and turn into COS. COS will remove map marker and remove file on "address" from active status.

POWER POLE RELOCATION/BRACING PROCEDURES

1.0 GENERAL:

1.1 The City of Houston is required to contact the applicable utility whenever a power

pole needs to be relocated or braced so that repair work can be done by City teams. The Central Operations Section (COS) personnel will make the request through a utility representative.

1.2 Representatives can be contacted as follows:

1.2.1 Reliant Energy (713) 207-1398

1.2.2 Southwestern Bell 1-800-246-8464

1.2.3 Time Warner Cable (713) 895-4300 or (713) 462-9000

(These numbers can be accessed on a 24-hour basis.)

1.3 Based on the information given by the City, the utility company will evaluate the urgency of the job and, if necessary, call the appropriate Utility supervisor directly requesting immediate field response

2.0 CITY OF HOUSTON:

2.1 The City requestor will furnish the following information relating to the job:

2.1.1 *Location: Address and designation of street or rear easement location.

2.1.2 *Type of Facility: Wood or aluminum pole. Type of utility (Reliant Energy, Southwestern Bell, Time Warner Cable)

2.1.3 *Urgency: Information pertaining to response time required i.e. property damage, pole leaning or falling.

2.1.4 *Scope of City Work Required: City supervisory personnel must be at the work site, at a pre-arranged time with the utility company, to explain the scope of the City work and to explain what work is needed.

3.0 PROCEDURES AFTER NOTIFICATION BY CITY OF HOUSTON:

3.1 Emergency Jobs: Utility company construction supervisor will dispatch a company foreman to the location. The foreman will meet the City representative, assess the situation in the field, and determine what action the utility company should follow.

3.2 Routine Jobs: Utility company will contact COS personnel to arrange a meeting between the company and City of Houston supervisory personnel. In this meeting, the foreman will determine what utility work is required and the foreman will schedule this work.

3.3 Presence of City of Houston Representative: If the City of Houston fails to have supervisory personnel on site at the designated time, the utility foreman will leave the work site and not commit teams to any construction work.

3.4 After Hours Request: The vast majority of bracing and relocation requests will come from the City during normal working hours, Monday through Friday. In the event of after hours and weekend requests, the COS Representative can use any of the 24 hour numbers listed above.

3.5 Customer outages: Relocation of facilities may involve outages to customers other than the City of Houston. Under these conditions, no utility work should begin prior to arranging commercial customer outages unless an electrical hazard exists

APPENDIX P

CITY OF HOUSTON, STANDARD SPECIFICATIONS

The City of Houston specifications can be viewed at:

http://documents.publicworks.houstontx.gov/documents/specifications/2009_standard_specification.pdf

APPENDIX Q

SAMPLE – DEAD END FLUSHING LOG

Sample Table – Dead-End Flushing Log
Greater Northeast Houston Service Area
July 200x

No.	Section	Address	Key Map	Flushed Date	Ending Residual
1	Hunter's Ridge 1	3200 Village Park Drive	297W	07/02	1.5
2	Kingwood Place 1	1600 Blossom Creek Court	336B	07/05	1.2
3	Kings Point 4	6000 Heather Blossom Lane	338B	07/10	1.7
4	Mills Branch 5	5300 Jasper Grove	297P	07/15	1.3
5	Forrest Cove	22200 Loop 494	335H	07/21	1.4

APPENDIX R

SAMPLE – TOTAL MONTHLY WATER PRODUCTION CHART

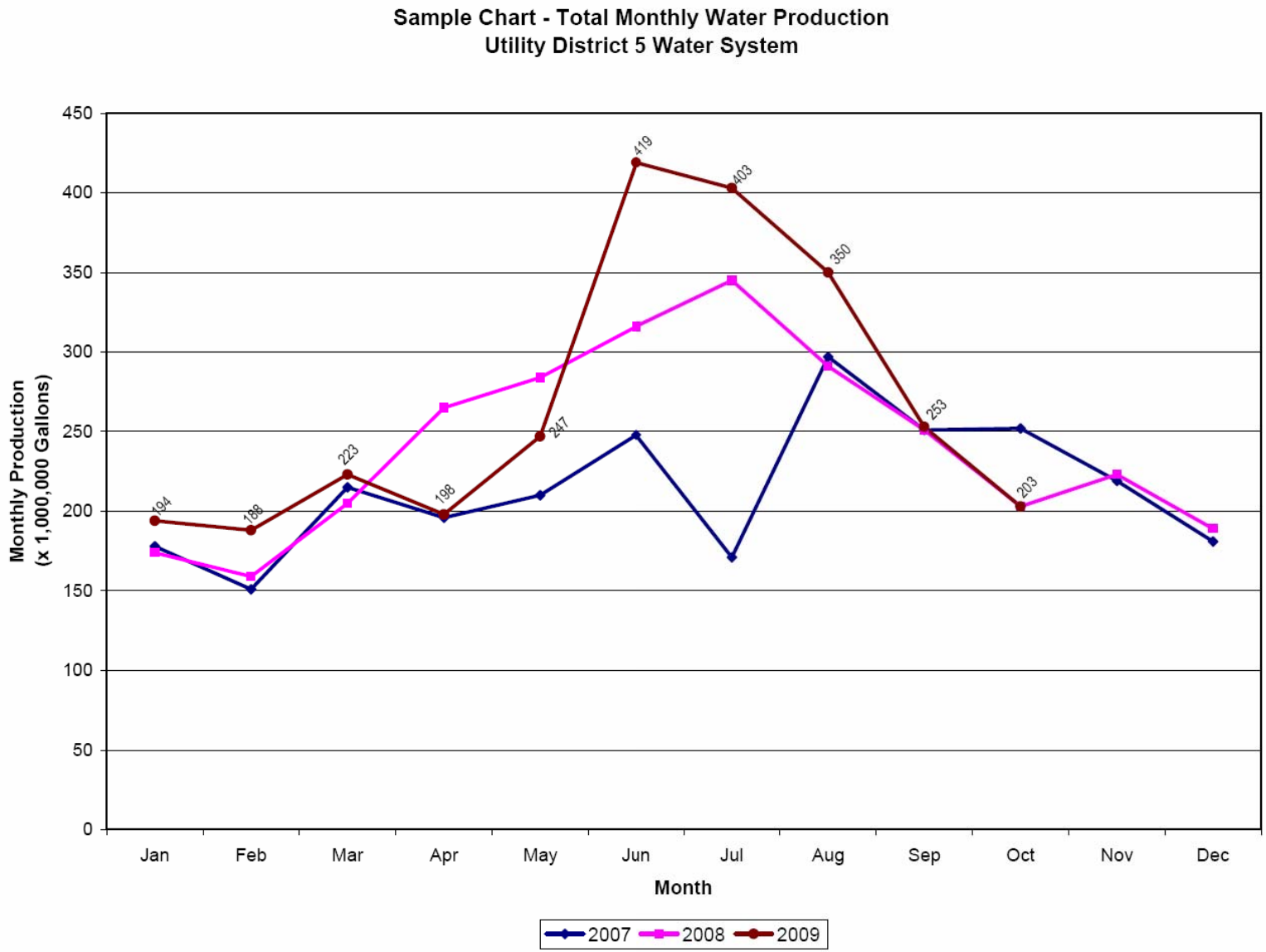
Sample Chart - Total Monthly Water Production
Utility District 5 Water System
Monthly Production
(x 1,000,000 Gallons)
450
400
350
300
250
200
150
100
50
0
Jan
Feb
Mar
Apr
May
Jun
Jul
Aug
Sep
Oct
Nov
Dec
Month
194
188
223
198
247
419
403
350
253
203
2007
2008
2009

APPENDIX S

SAMPLE – TOTAL DAILY WATER PRODUCTION CHART

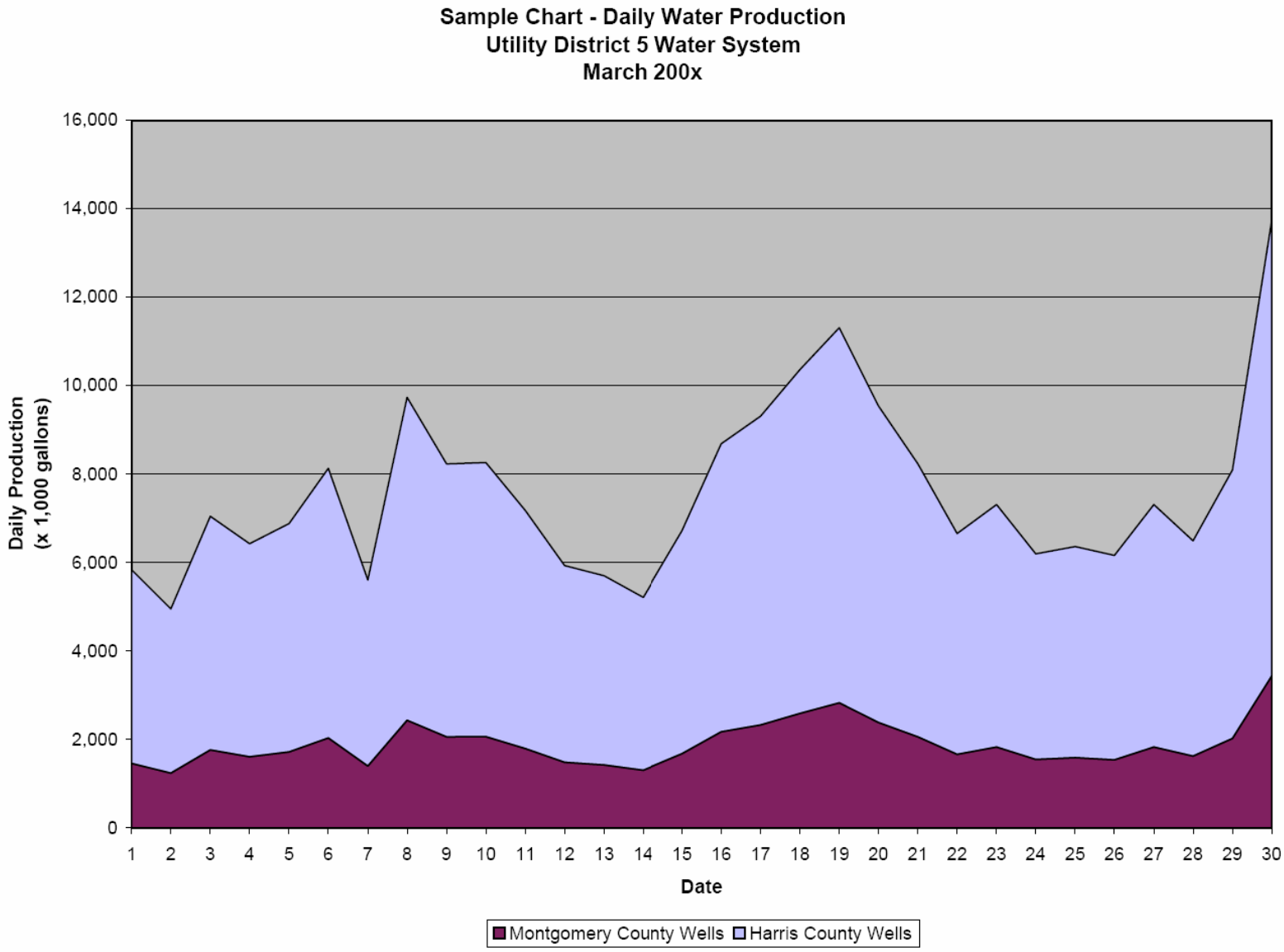
Sample Chart - Daily Water Production
Utility District 5 Water System
March 200x
Daily Production
(x 1,000 gallons)
16,000
14,000
12,000
10,000
8,000
6,000
4,000
2,000
0
1 2 3 4 5 6 7 8 9 10 11 12 13 14 15 16 17 18 19 20 21 22 23 24 25 26 27 28 29 30
Date
Montgomery County Wells
Harris County Wells

APPENDIX T

ADDITIONAL COSTS – EMERGENCY POWER & EDUCATION OUTREACH

GENERATORS

Payment for Generators under Additional Services shall be based on the sum of applicable unit prices in the R.S. Means Cost Data books (latest edition in effect at that time). For this Agreement, the unit price shall be the “Total Bare Costs” column in the R.S. Means Cost Data books adjusted using the Houston, Texas Cities Cost Index “total weighted average”. Each unit price is comprised of the overhead, labor burden, profit, equipment, and material costs to accomplish that specific task.

EDUCATIONAL OUTREACH PROGRAM

The Educational Outreach program costing shall include the number of hours dedicated to each portion of the program, the materials (literature, promotional material and marketing) and the frequency.