DOOR AND FRAME SCHEDULE															
DOOR							FRAME					HARDWARE			
DOOR NO.	TYPE	SIZE WD	SIZE HGT	SIZE THK	MATERIAL	GLAZING	MATERIAL	DETAIL HEAD	DETAIL JAMB	DETAIL SILL	FIRE RATING	SET NO.	KEYSIDE RM NO.	NOTES
101A	—	—	—	—	—	—	—	—	—	—	NON RATED	01	OUTSIDE ENTRANCE	EXISTING TO REMAIN IN SAME LOCATION
101B	A	—	—	1-3/4"	ALUM. ANODIZED	TEMPERED	ALUM. ANODIZED	C4/A-605	A2/A-605	A4/A-605	NON RATED		OUTSIDE ENTRANCE	RE: TYPE FOR FRAME DIMENSIONS
101C	—	—	—	—	—	—	—	—	—	—	NON RATED	—	OUTSIDE ENTRANCE	EXISTING RE: PLAN FOR NEW LOCATION
105A	—	—	—	—	—	—	—	—	—	—	NON RATED	—	OUTSIDE	EXISTING TO REMAIN IN SAME LOCATION
101E	—	—	—	—	—	—	—	—	—	—	NON RATED	—	OUTSIDE	EXISTING TO REMAIN IN SAME LOCATION
204A	B	3'-0"	7'-0"	1-3/4"	HOLLOW METAL PAINTED	—	HOLLOW METAL PAINTED	B5/A-605	—	A5/A-605	NON RATED	—		

PROVIDE ALTERNATE PRICE FOR REPLACING EXISTING DOORS AND WINDOWS, MATCHING EXISTING DIMENSION AND MATERIALS.
PROVIDE PRICE TO REINSTALL ALL EXISTING DOORS AND WINDOWS.

GLAZING: U FACTOR OF 0.58, SHGC OF 0.3

D1 DOOR SCHEDULE
SCALE: N.T.S.

WINDOW SCHEDULE							
MARK	SIZE WIDTH	SIZE HEIGHT	TYPE	MATERIAL	GLAZING	NOTES	
01	—	—	—	—	—	EXISTING, PROVIDE PRISE FOR NEW GLASS PANEL TO MATCH EXISTING	
02	—	—	—	—	—	EXISTING RE: FLOOR PLAN FOR NEW LOCATION	
04	4'-0"	5'-0"	A	ANODIZED ALUM. FRAME	DOUBLE PANEL INSULATED	—	OPERABLE
05	4'-0"	5'-0"	A	ANODIZED ALUM. FRAME	DOUBLE PANEL INSULATED	—	OPERABLE

PROVIDE ALTERNATE PRICE FOR REPLACING EXISTING DOORS AND WINDOWS, MATCHING EXISTING DIMENSION AND MATERIALS.
PROVIDE PRICE TO REINSTALL ALL EXISTING DOORS AND WINDOWS.

GLAZING: U FACTOR OF 0.58, SHGC OF 0.3

C1 WINDOW SCHEDULE
SCALE: N.T.S.

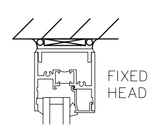

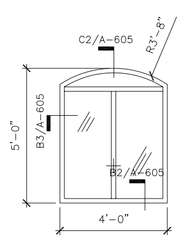

TYPE A

B1 WINDOW TYPES
SCALE: 1/4" = 1'-0"

C2 HEAD DETAIL
SCALE: 3" = 1'-0"

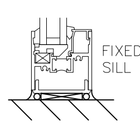

B2 SILL DETAIL
SCALE: 3" = 1'-0"

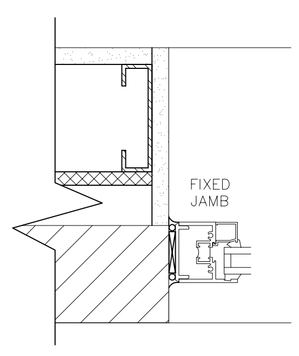

B3 JAMB DETAIL
SCALE: 3" = 1'-0"

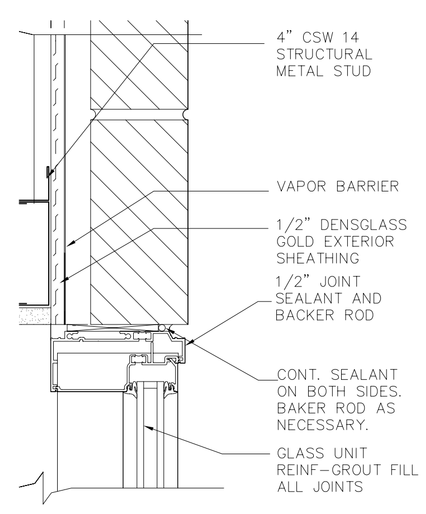

C4 HEAD DETAIL
SCALE: 3" = 1'-0"

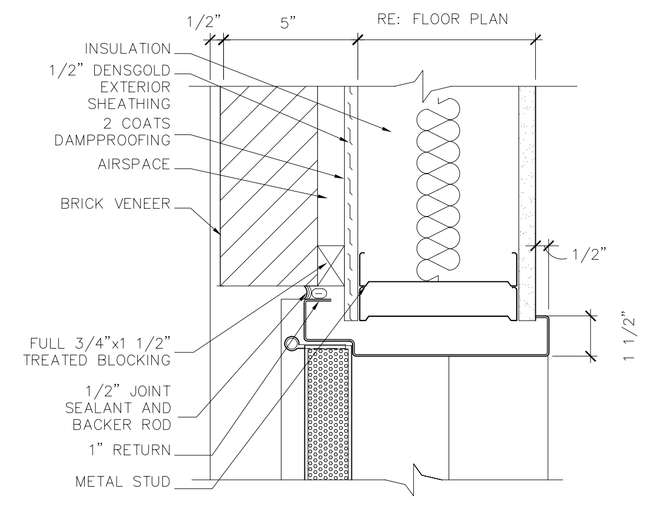

B5 HEAD DETAIL
SCALE: 3" = 1'-0"

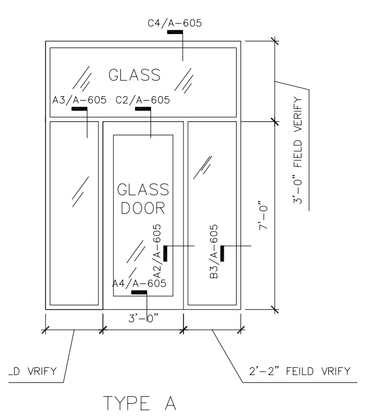

TYPE A

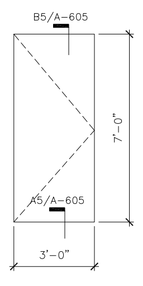

TYPE B

A1 DOORTYPES
SCALE: 1/4" = 1'-0"

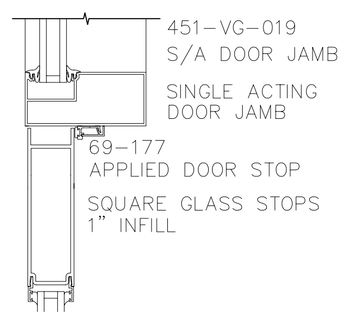

A2 JAMB DETAIL
SCALE: 3" = 1'-0"

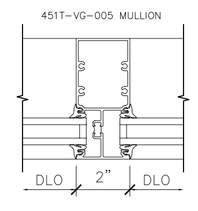

A3 HORIZONTAL DETAIL
SCALE: 3" = 1'-0"

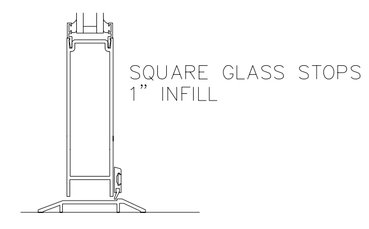

A4 SILL DETAIL
SCALE: 3" = 1'-0"

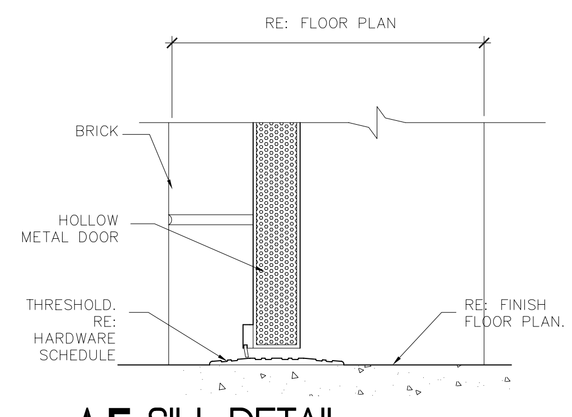

A5 SILL DETAIL
SCALE: 3" = 1'-0"

SPECWORKS # 87115-B75Z38OCS

HW SET: 01
DOOR NUMBER:
101A 101C 101E 105A

EACH TO HAVE:

1	NOTE:	EXISTING DOOR, FRAME & HARDWARE TO REMAIN		B/O

HW SET: 02
DOOR NUMBER:
101B

EACH TO HAVE:

1	EA	CONTINUOUS HINGE	112HD	628	IVE
1	EA	DEADLOCK	MS1850S - ADVISE BACKSET	628	ADA
2	EA	MORTISE CYLINDER	MATCH EXISTING KEY SYSTEM	626	B/O
1	EA	EXIT INDICATOR	4089	628	ADA
1	EA	PULL/PUSHBAR	9190-0-NO	630	IVE
1	EA	SURFACE CLOSER	1461 CUSH FC	689	LCN
1	EA	MOUNTING PLATE	1460-18PA X AS REQ'D	689	LCN
1	EA	CUSH SHOE SUPPORT	1460-30 X AS REQ'D	689	LCN
1	EA	BLADE STOP SPACER	1460-61 X AS REQ'D	689	LCN
1	SET	SEALS	BY DOOR MANUFACTURER		B/O
1	EA	DOOR SWEEP	198NA	AL	NGP
1	EA	THRESHOLD	513	AL	NGP

HW SET: 03
DOOR NUMBER:
204A

EACH TO HAVE:

3	EA	HINGE	5BB1HW 4.5 X 4.5 NRP	630	IVE
1	EA	PANIC DEVICE	25-R-L	630	FAL
1	EA	MORTISE CYLINDER	MATCH EXISTING KEY SYSTEM	626	B/O
1	EA	SURFACE CLOSER	1461 CUSH FC	689	LCN
1	SET	SEALS	5050B	BRN	NGP
1	EA	DRIP CAP	16A	AL	NGP
1	EA	DOOR SWEEP	95WH	AL	NGP
1	EA	THRESHOLD	896V	AL	NGP

A6 DOOR HARDWARE SCHEDULE
SCALE: N.T.S.

S:\PROJECTS\FS - 37\01-CAD\2-Construction Documents\F - ARCHITECTURAL\A-605.dwg

DESIGN FILE:

ISSUE LOG

NO.	DATE	DESCRIPTION
1	04/07/09	ISSUE FOR BID
2	04/07/09	ISSUE FOR PERMIT
3		
4		
5		
6		

CONSULTANT(S) :

NATEX CORPORATION ARCHITECTS
2500 WILCREST, SUITE 300
HOUSTON, TEXAS 77042
TELEPHONE: 713-975-9525
FAX: 713-780-7824

SEAL(S) :

REGISTERED ARCHITECT CAROLINA WEITZMAN 04/09/09 15620 STATE OF TEXAS

PROJECT NAME :
FIRE STATION 20 RENOVATIONS

HOUSTON, TEXAS

CITY OF HOUSTON
GENERAL SERVICES DEPARTMENT

REVIEWED :
PROGRAM MANAGER
SPONSORING DEPARTMENT
PROJECT MANAGER

OTHER APPROVALS :
WATER ENGINEERING
TRAFFIC AND TRANSPORTATION
WASTEWATER ENGINEERING
STREET, BRIDGE & ROW ENGINEERING
STORMWATER ENGINEERING
PLANNING & DEVELOPMENT
CITY ENGINEER
DATE
DIRECTOR, DEPT. OF PUBLIC WORKS & ENGINEERING
DATE

DATE : 03/10/09
W.B.S. No : D-000000-0000-0
SCALE : AS SHOWN
DRAWN BY : YA
CHECKED BY : CAROLINA WEITZMAN

SHEET TITLE :
DOOR & WINDOW SCHEDULE

SHEET NO. :
019 OF XX SHEETS

CITY DWG. NO. :
A-605