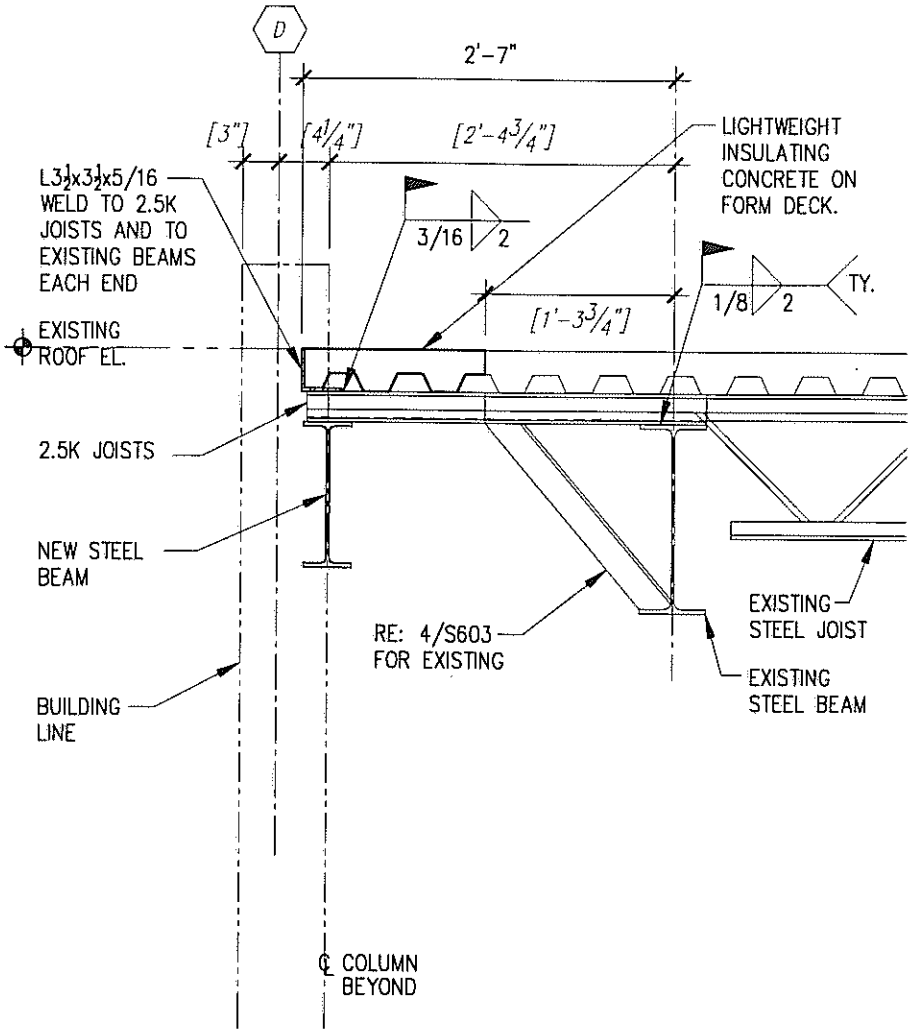

6 SECTION

SCALE: 3/4"=1'-0"

STATE OF TEXAS
SAADUDDIN AHMED
54937
REGISTERED PROFESSIONAL ENGINEER
5/11/09

NATEX CORPORATION ARCHITECTS
2500 WILCREST, SUITE 300
HOUSTON, TEXAS 77042
TELEPHONE: 713-975-9525
FAX: 713-780-7824

SHEET NO: S603

PROJECT : FIRE STATION 20
ADDRESS : 6902 NAVIGATION
HOUSTON, TEXAS 77011
WBS No:
ADDENDUM No: 01
DATE: MAY 11, 2009

CITY OF HOUSTON
GENERAL SERVICES DEPARTMENT

SKETCH NO: SK12