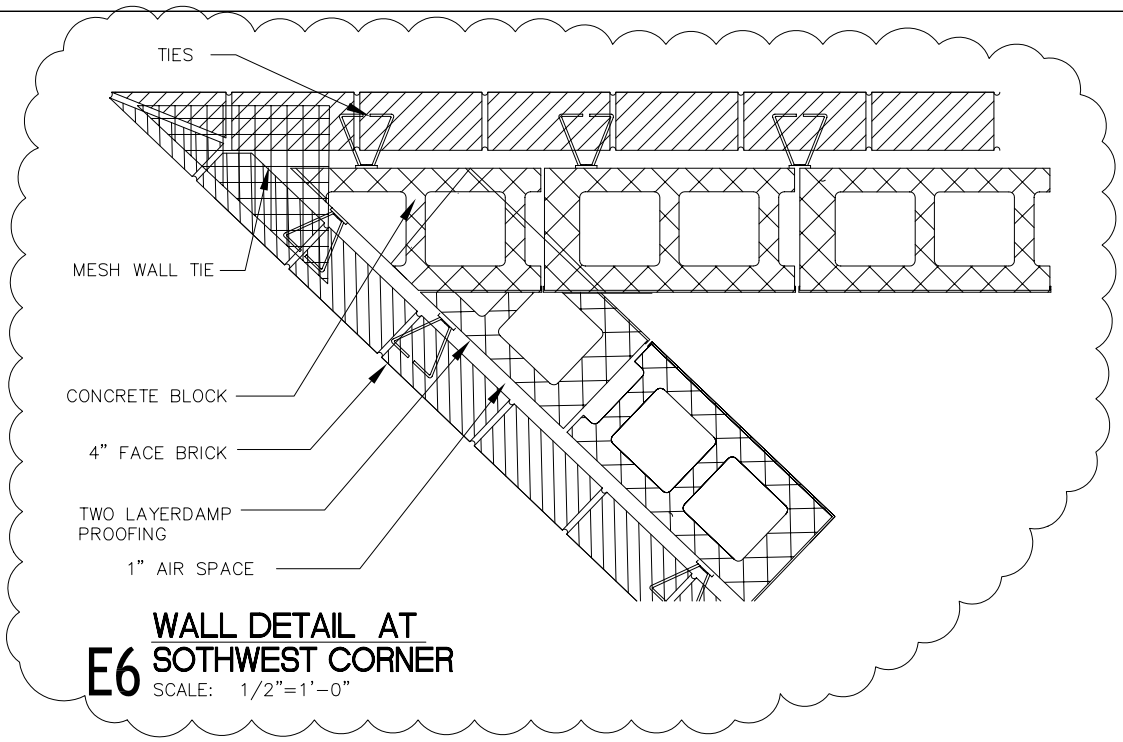

E6 WALL DETAIL AT SOTHWEST CORNER
SCALE: 1/2"=1'-0"

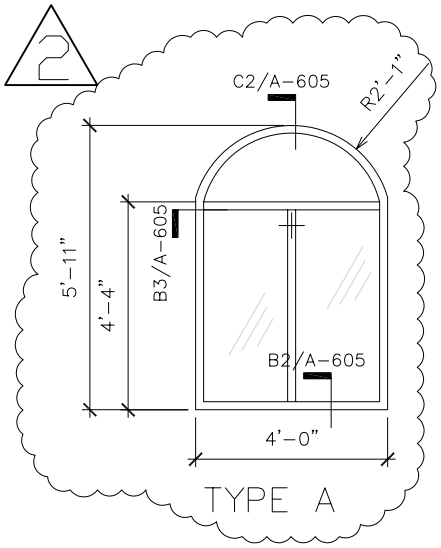

TYPE A

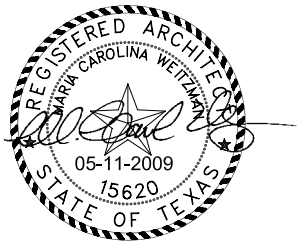

NATEX
CORPORATION
ARCHITECTS
2500 WILCREST, SUITE 300
HOUSTON, TEXAS 77042
TELEPHONE: 713-975-9525
FAX: 713-780-7824

SHEET NO: A-401 AND A-605

PROJECT : FIRE STATION 20
ADDRESS : 6902 NAVIGATION
HOUSTON, TEXAS 77011
WBS No:
ADDENDUM No: 02
DATE: MAY 18, 2009

CITY OF HOUSTON
GENERAL SERVICES
DEPARTMENT

SKETCH NO: 01