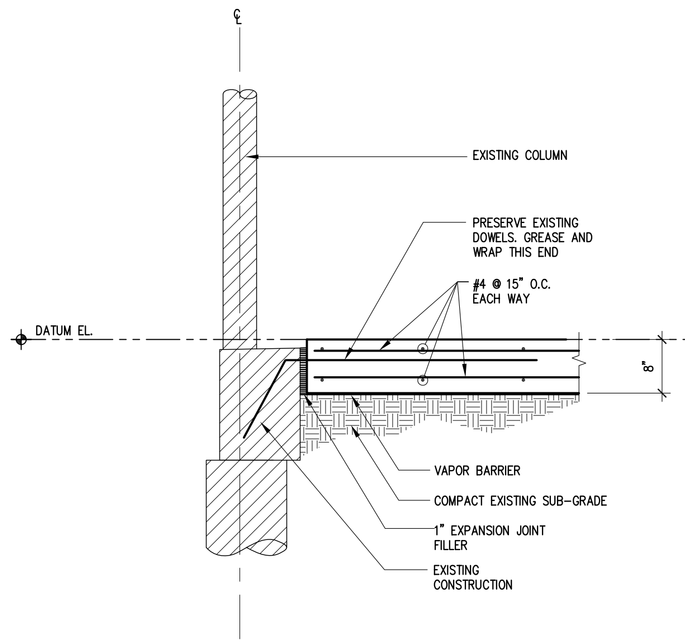

1 SECTION

SCALE: 3/4"=1'-0"

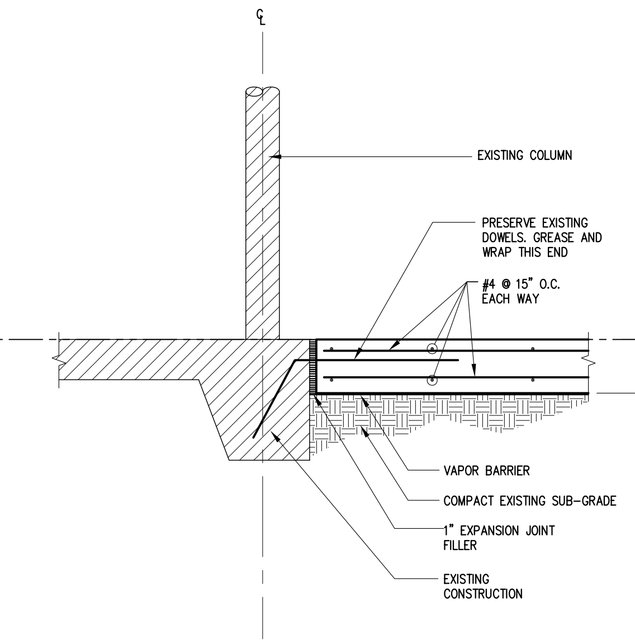

2 SECTION

SCALE: 3/4"=1'-0"

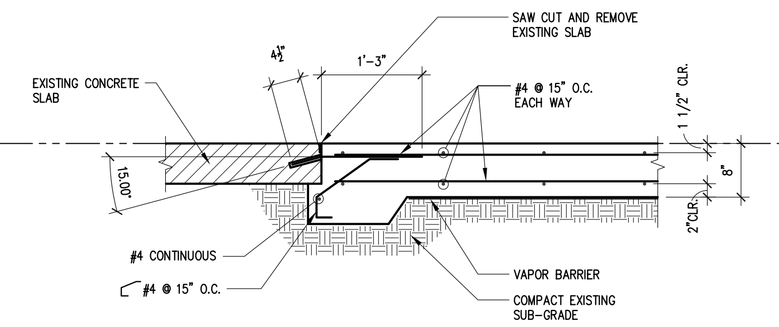

3 SECTION

SCALE: 3/4"=1'-0"

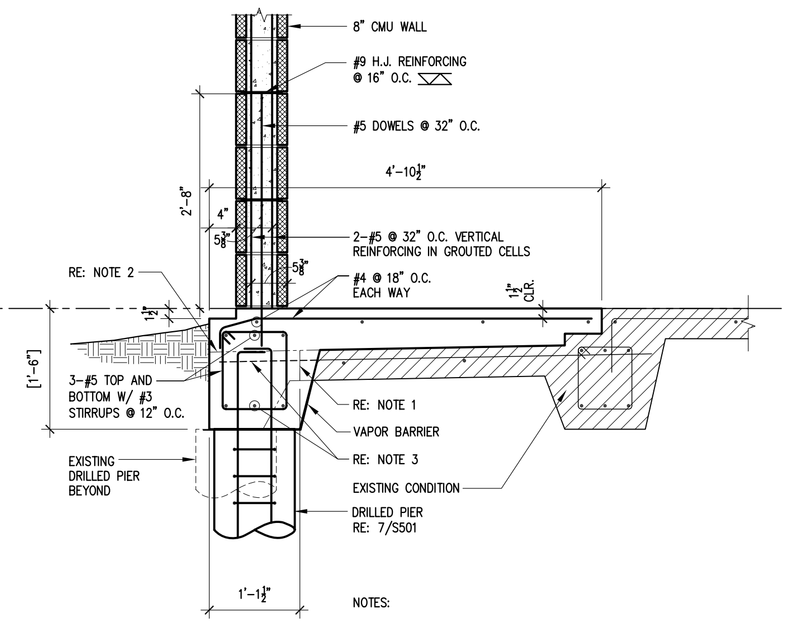

NOTES:

1. SAW EXISTING SLAB WITHOUT CUTTING REINFORCING ABOUT 1'-1 1/2" FROM EDGE.
2. REMOVE EXISTING GRADE BEAM.
3. MAINTAIN EXISTING SLAB AND DRILLED PIER REINFORCING AS DOWELS.

4 SECTION

SCALE: 3/4"=1'-0"

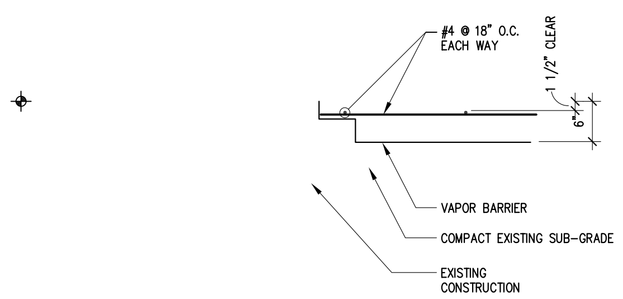

5 SECTION

SCALE: 3/4"=1'-0"

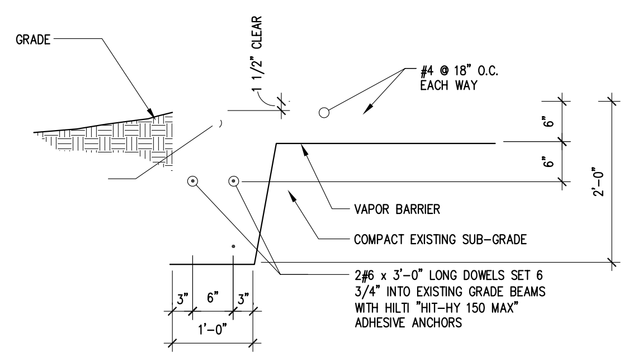

6 SECTION

SCALE: 3/4"=1'-0"

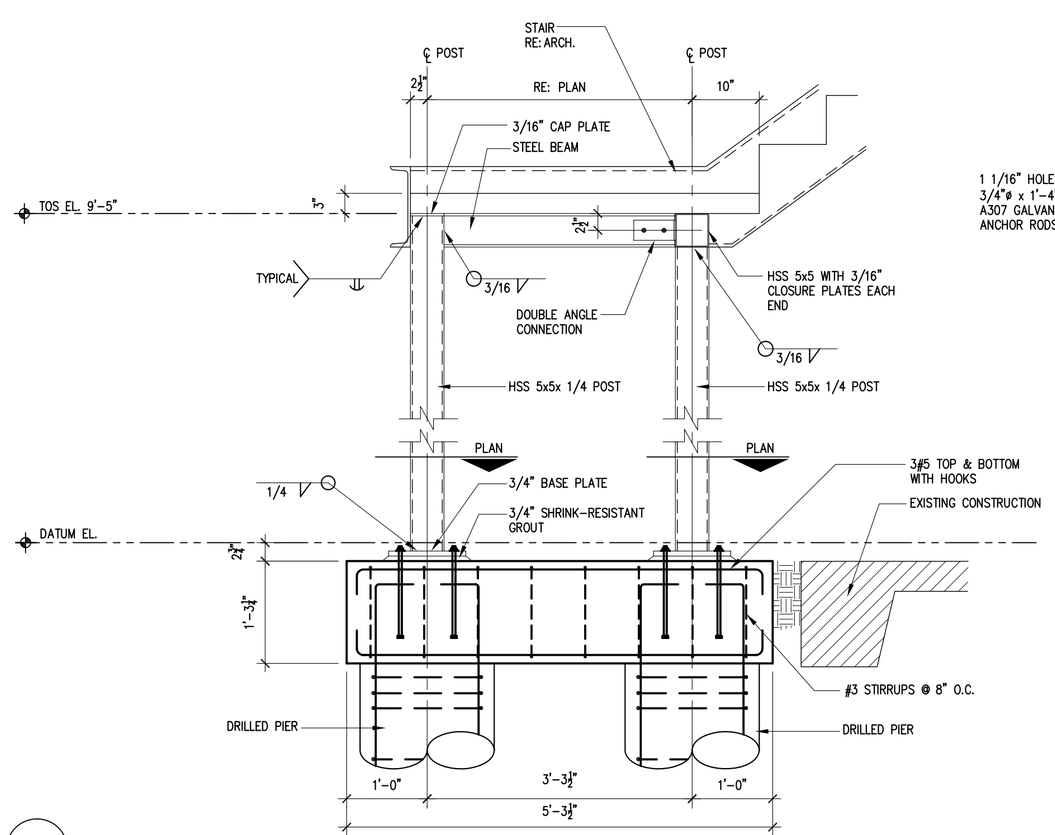

8 SECTION

SCALE: 3/4" = 1'-0"

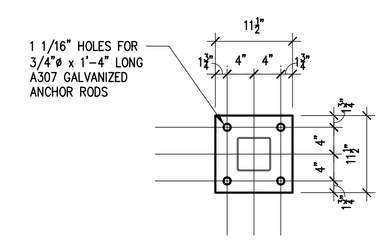

PLAN

SCALE: 3/4" = 1'-0"

NOTE:
GALVANIZE POST ASSEMBLIES AFTER FABRICATION.

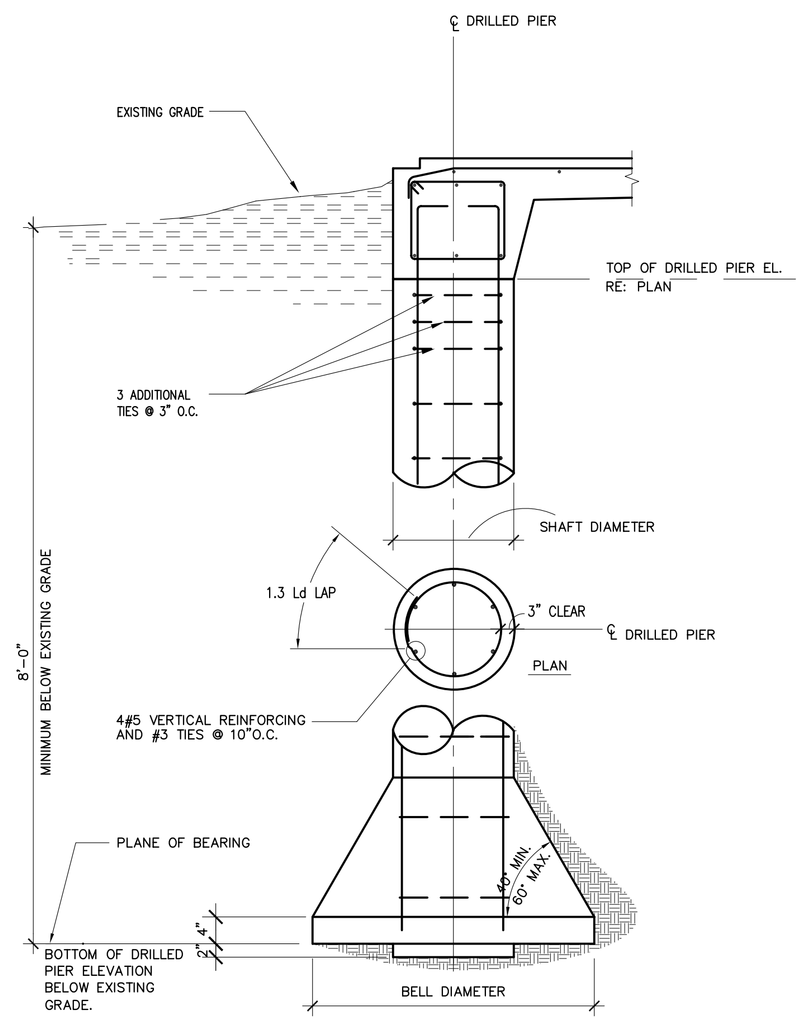

7 TYPICAL DRILL PIER DETAIL

SCALE: N.T.S.

DRILLED PIER GENERAL NOTES

1. A GEOTECHNICAL REPORT IS NOT AVAILABLE FOR REVIEW.
2. DRILLED PIERS ARE DESIGNED FOR AN ALLOWABLE END BEARING PRESSURE OF 6000 PSF UNDER TOTAL LOAD AND 4000 PSF UNDER DEAD PLUS SUSTAINED LIVE LOAD.
3. THE INDEPENDENT TESTING LABORATORY SHALL CONFIRM THE ALLOWABLE SOIL BEARING CAPACITY IN THE FIELD AT THE ELEVATION DESIGNATED AS THE PLANE OF BEARING FOR THE DRILLED PIER.
4. THE INDEPENDENT TESTING LABORATORY SHALL INSPECT THE BOTTOM AND SIDES OF THE DRILLED PIER PRIOR TO PLACING REINFORCING AND CONCRETE.
5. CENTER ALL DRILLED PIERS UNDER THEIR COLUMNS OR GRADE BEAM, UON.
6. USE ACCURATE DRILLING PRACTICES TO ACHIEVE CLOSE TOLERANCES WITH THE REINFORCING STEEL AND THE ANCHOR ROD TEMPLATE.
7. ALL REINFORCING STEEL FOR DRILLED PIERS SHALL BE DEFORMED NEW BILLET STEEL CONFORMING TO ASTM A615, GRADE 60.
8. ALL SCHEDULED REINFORCEMENT SHALL BE UNIFORMLY DISTRIBUTED.
9. DEPOSIT CONCRETE TO ITS FINAL POSITION BY THE USE OF A TREMIE.
10. CONSOLIDATE CONCRETE IN ITS FINAL POSITION BY VIBRATING.

ISSUE LOG

NO.	DATE	DESCRIPTION
1	04/07/09	ISSUE FOR BID
2	04/07/09	ISSUE FOR PERMIT
3		
4		
5		
6		

CONSULTANT(S) :

NATEX CORPORATION ARCHITECTS

2500 WILCREST, SUITE 300
HOUSTON, TEXAS 77042

TELEPHONE: 713-975-9525
FAX: 713-780-7824

SEAL(S) :

ASA CONSULTING ENGINEERS INC.
1155 Dairy Ashford, Suite 111
Houston, Texas 77079
TEL. NO. (281) 531-4401
FAX. NO. (281) 531-8835

STATE OF TEXAS
SAADUDDIN AHMED
037
REGISTERED PROFESSIONAL ENGINEER
04/07/09

PROJECT NAME :

FIRE STATION 20 RENOVATIONS

HOUSTON, TEXAS

CITY OF HOUSTON
GENERAL SERVICES DEPARTMENT

REVIEWED :

PROGRAM MANAGER | SPONSORING DEPARTMENT
PROJECT MANAGER

OTHER APPROVALS :

WATER ENGINEERING | TRAFFIC AND TRANSPORTATION
WASTEWATER ENGINEERING | STREET, BRIDGE & ROW ENGINEERING
STORMWATER ENGINEERING | PLANNING & DEVELOPMENT

CITY ENGINEER | DATE
DIRECTOR, DEPT. OF PUBLIC WORKS & ENGINEERING | DATE

DATE : 04/07/09
W.B.S. No : D-000000-0000-0
SCALE : AS SHOWN
DRAWN BY : DL
CHECKED BY : JL

SHEET TITLE :
FOUNDATION DETAILS

SHEET NO. : **S501**
7 OF SHEETS

CITY DWG. NO. :

DESIGN FILE:

CAD FILE :