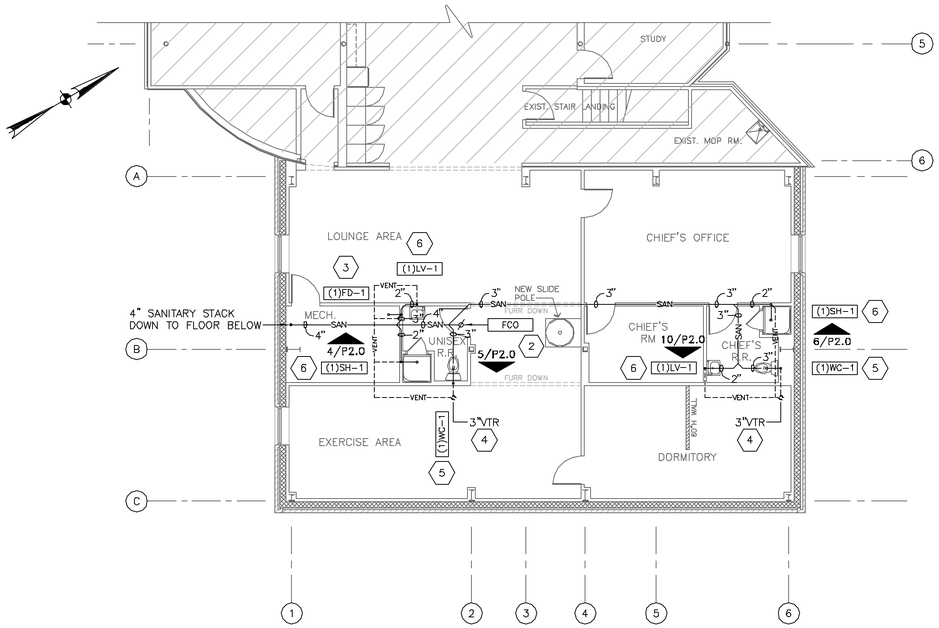

1 2nd LEVEL PLUMBING PLAN - SANITARY

SCALE: 1/8" = 1'-0"

1. REFER TO SITE PLAN FOR CONTINUATION OF SANITARY PIPING.
2. PROVIDE FLOOR CLEAN OUT AS PER DETAIL.
3. CONNECT 3" SANITARY AND 2" VENT LINE TO FLOOR DRAIN, SERVICE SINK OR WATER CLOSET. RE: PLUMBING FIXTURE SCHEDULE.
4. PROVIDE 3" VENT LINE THRU THE ROOF UNLESS NOTED OTHERWISE.
5. CONNECT 3" SANITARY AND 3" VENT LINE TO WATER CLOSET. RE: PLUMBING FIXTURE SCHEDULE.
6. CONNECT 2" SANITARY AND 1 1/2" VENT LINE TO SHOWER OR LAVATORY/SINK. RE: PLUMBING FIXTURE SCHEDULE.

3 SANITARY PLUMBING KEYED NOTES

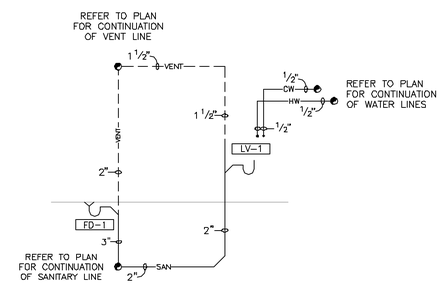

4 RISER DIAGRAM @ UNISEX R.R.

SCALE: N.T.S.

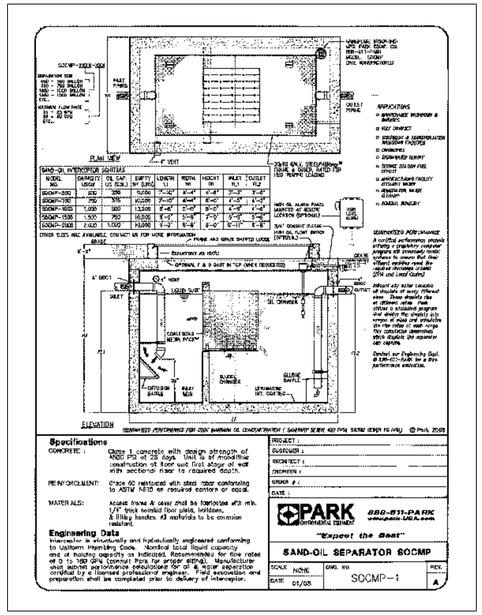

8 SAND-OIL INTERCEPTOR SOCMP-750

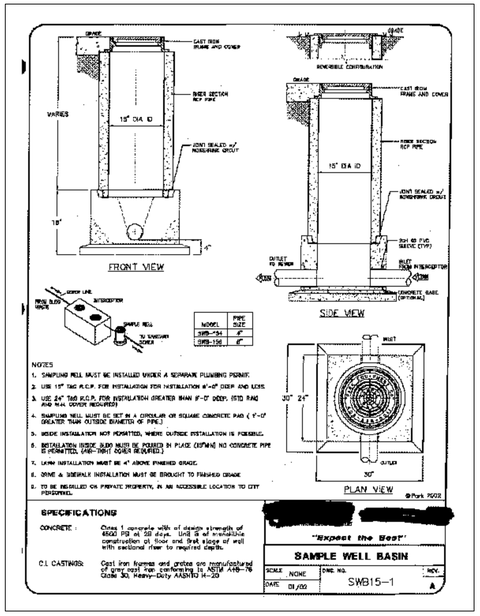

9 SAMPLE WELL BASIN

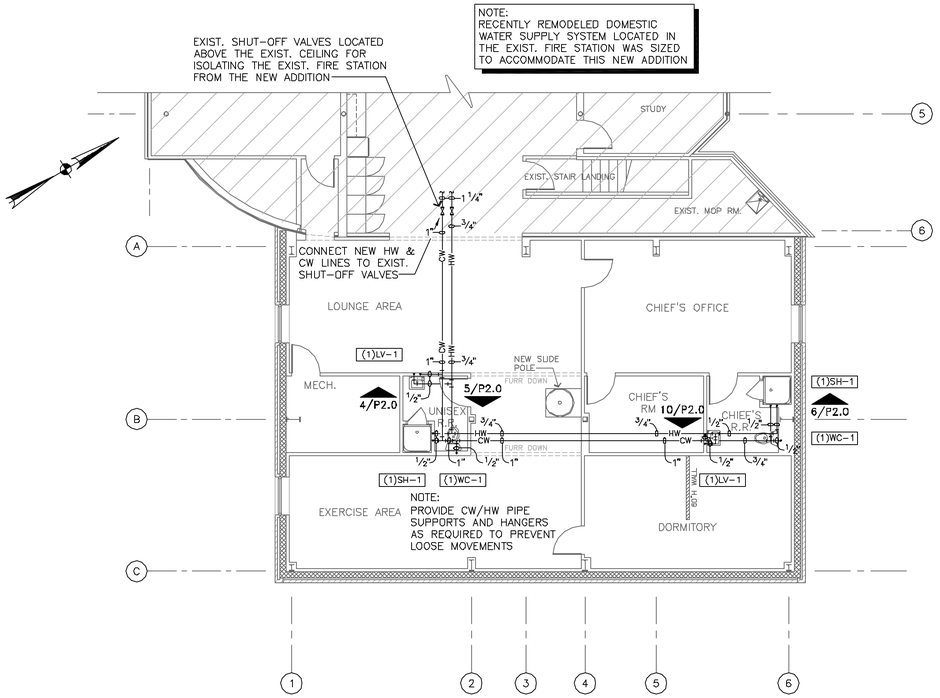

2 2nd LEVEL PLUMBING PLAN - DOMESTIC WATER

SCALE: 1/8" = 1'-0"

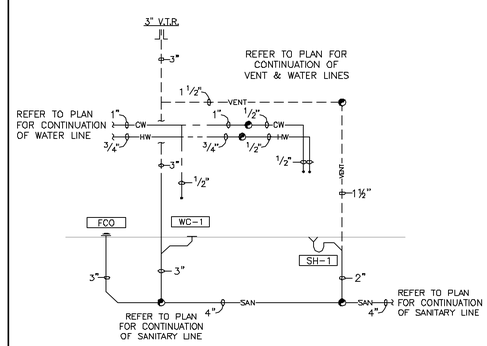

5 RISER DIAGRAM @ UNISEX R.R.

SCALE: N.T.S.

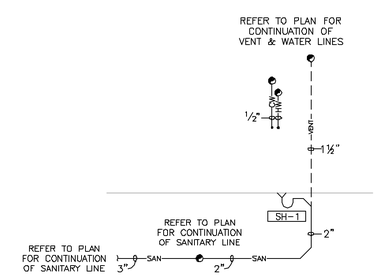

6 RISER DIAGRAM @ CHIEF'S R.R.

SCALE: N.T.S.

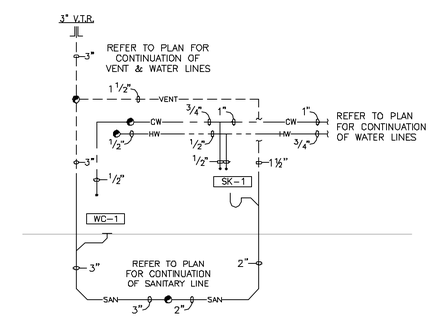

10 RISER DIAGRAM @ CHIEF'S R.R.

SCALE: N.T.S.

*

*

Copyright © 2009 Lay-Su & Associates, Inc.
Reproduction of this drawing or information herein without written permission of Lay-Su & Associates, Inc., violates the copyright laws of the U.S. and will be subject to legal prosecution.

CITY OF HOUSTON FIRE DEPARTMENT
FIRE STATION #20 - ADDITION
6902 NAVIGATION BLVD., HOUSTON, TEXAS

SEAL: STATE OF TEXAS — R. LAY-SU — 46273 — REGISTERED PROFESSIONAL ENGINEER — 04/16/10

R. Lay-Su
P.E.# 46273

LAY-SU Architects & Engineers
HOUSTON, TEXAS 77031
TEXAS ENGINEERING FIRM #F-5215

WARNING: 0 — 1 — IF THIS BAR DOES NOT MEASURE 1" THEN DRAWING IS NOT TO SCALE

REV.	DATE	REMARKS
–	04/16/10	Issued for Bids

Issued for Bid Date: | Lay-Su Project No.: 1095

DESIGNED BY: R.L.S.
DRAWN BY: RDY
SCALE: AS SHOWN
DATE: SEPTEMBER 2009

DRAWING NAME: 2nd LEVEL PLUMBING PLANS & RISERS

SHEET: P2.0

PRINT DATE: 04/16/10 DRAWING NAME: P2.0.dwg