GENERAL NOTES

1. THE BUILDING CODE USED IS INTERNATIONAL BUILDING CODE (IBC–2006) 2006 EDITION.
2. THE CONTRACTOR SHALL VERIFY ALL DIMENSIONS AND CONDITIONS IN THE FIELD PRIOR TO COMMENCING WORK. THE ENGINEER SHALL BE NOTIFIED OF ANY DISCREPANCIES WHICH MAY EXIST.
3. ALL FOOTINGS ARE TO BE PLACED ON FIRM AND CLEAN SOIL. THE SOIL BEARING SHOULD BE VERIFIED AT THE FOOTINGS BY AN ACCEPTED TESTING METHOD. THE SOIL BEARING PRESSURE SHOULD BE REPORTED TO THE ENGINEER.
4. SEE ARCHITECTURAL DRAWINGS FOR FLOOR ELEVATIONS, SLOPE, AND THE LOCATION OF DEPRESSED FLOOR AREAS. THE CONTRACTOR SHALL COMPARE THE STRUCTURAL SECTIONS WITH THE ARCHITECTURAL SECTIONS AND REPORT ANY DISCREPANCY TO THE ARCHITECT PRIOR TO FABRICATING OR INSTALLING STRUCTURAL MEMBERS.
5. PRINCIPAL OPENINGS THROUGH THE FRAMING ARE SHOWN ON THESE DRAWINGS. THE GENERAL CONTRACTOR SHALL EXAMINE THE ARCHITECTURAL AND MECHANICAL DRAWINGS FOR THE REQUIRED OPENINGS AS HE SHALL PROVIDE FOR ALL OPENINGS WHETHER SHOWN ON THE DRAWINGS OR NOT AND SHALL VERIFY SIZE AND LOCATION OF ALL OPENINGS WITH THE MECHANICAL CONTRACTOR. ANY DEVIATION FROM THE OPENINGS SHOWN ON THE STRUCTURAL DRAWINGS SHALL BE BROUGHT TO THE ENGINEER'S ATTENTION FOR APPROVAL.
6. SLABS ON GRADE SHALL BE PLACED ON FILL COMPACTED AS REQUIRED BY THE GEOTECHNICAL (SOILS) REPORT.
7. DESIGN LIVE LOADS: POUNDS PER SQ. FT.

FIRST FLOOR	40
SECOND FLOOR	40
BALCONY60SUPERIMPOSED DEAD LOAD	15
MECHANICAL AND CEILING	7
FINISHES WHEREVER SHOWN ON ARCH. DRAWINGS	AS REQUIRED

LIVE LOAD REDUCTIONS:LIVE LOAD REDUCTIONS HAVE BEEN TAKEN FOR BEAMS, GIRDERS, AND COLUMNS. THESE REDUCTIONS HAVE BEEN TAKEN ONLY AS ALLOWED BY THE BUILDING CODE.

DESIGN

1. CONSTRUCTION SHALL BE IN ACCORDANCE WITH THE UNIFORM BUILDING CODE, LATEST EDITION OR LOCAL BUILDING CODES WHERE APPLICABLE.
2. THIS FOUNDATION IS DESIGNED IN ACORDANCE WITH CURRENT ACCEPTABLE ENGINEERING PRACTICES FOR THE SITE SHOWN ON THE PLANS AND MAY NOT BE USED IN ANY OTHER LOCATION.
3. AS WITH ALL GROUND–SUPPORTED SLABS, THIS FOUNDATION IS DESIGNED TO MOVE WITH THE UNDERLYING SOILS WHILE SUSTAINING A CALCULATED AMOUNT OF FLEXTURE. IT MAY ALSO SUSTAIN NORMAL TEMPERATURE AND SHRINKAGE CRACKS AS A RESULT OF THE CONCRETE CURING PROCESS.
4. THE DESIGN IS BASED ON THE FOLLOWING ASSUMPTIONS:
   A. FINAL GRADING IS COMPLETED AS OUTLINED IN THE GENERAL NOTES – SITEWORK.
   B. FINAL GRADE AND A FAIRLY UNIFORM MOISTURE LEVEL IS MAINTAINED FOR THE LIFE OF THE FOUNDATION.
   C. THE FOUNDATION IS NOT INSTALLED DURING A DRY OR WET PERIOD WHICH IS CONSIDERED EXTREME OR ABNORMAL FOR THE AREA. IF SUCH IS THE CASE, BUILDER SHALL NOTIFY THE ENGINEER PRIOR TO TRENCHING FOR A POSSIBLE REDESIGN.
5. THE FOUNDATION IS DESIGNED IN ACCORDANCE WITH THE FOLLOWING GEOTECHNICAL INVESTIGATION:

   SOIL REPORT NO.: 12S4633

   BY: A&R ENGINEERING AND TESTING, INC.

   DATED: MAY 01, 2012
6. FOOTING DESIGN IS BASED ON AN ALLOWABLE BEARING PRESSURE OF 3000 PSF FOR DEAD LOAD AND SUSTAINED LIVE LOAD AT A DEPTH OF 14 FT. BELOW EXISTING GRADE AND 3750 PSF FOR TOTAL LOADS.
7. HOLES FOR DRILLED FOOTINGS SHALL BE CLEAN PLUMB AND CONCRETE SHALL BE PLACED THE SAME DAY AS EXCAVATION.
8. STAIR, HANDRAIL AND GUARDRAIL DESIGN:

   STAIR TREADS MINIMUM DESIGN LOAD IS 300 LBS (ON AREA OF 4 SQUARE INCHES) IN ACCORDANCE TO IBC–2006 TABLE 1607.1, FOOTNOTE F. HANDRAILS, AND GUARDS ARE DESIGNED TO MEET THE REQUIREMENTS OF SECT. 1607.7.1, SINGLE 200 LB. LOAD APPLIED AT THE TOP OF THE HANDRAILS AT THE POSITION PRODUCING THE MAXIMUM STRESS.

HELICAL PILES

1. HELICAL PILES SHALL BE DESIGNED AND MANUFACTURED IN ACCORDANCE WITH THE 2009 INTERNATIONAL BUILDING CODE (2009 IBC).
2. HELICAL PILES SHALL BE DESIGNED AND MANUFACTURED BY RAMJACK OR APPROVED EQUAL. CONTACT BRIAN BUCHANAN AT 210–789–3107 OR DARIN WILLIS, P.E., AT 972–494–3800.
3. DIMENSIONS OF THE CENTRAL SHAFT AND THE NUMBER, SIZE, SPACING, AND THICKNESS OF HELICAL BEARING PLATES SHALL BE DESIGNED AND FABRICATED TO SUPPORT THE SPECIFIED DESIGN LOADS.
4. MINUMUM AND MAXIMUM INSTALLATION TORQUES SHALL BE SPECIFIED BY THE HELICAL PILE MANUFACTURER. THE MINUMUM INSTALLATION TORQUE SHALL BE HIGH ENOUGH TO ACHIEVE THE BEARING CAPACITY, INCLUDING THE SAFETY FACTOR, SPECIFIED BY THE APPROVED GEOTECHNICAL ENGINEER. THE MAXIMUM INSTALLATION TORQUE SHALL NOT EXCEED THE ALLOWABLE TORSIONAL CAPACITY OF THE PILE SHAFTS.
5. HELICAL PILES SHALL BE DESIGNED AND MANUFACTURED TO RESIST ALL STRESSES INDUCED BY INSTALLATION.
6. THE TOP BEARING PLATE OF EACH PILE SHALL BE INSTALLED TO THE MINUMUM EMBEDMENT DEPTH SPECIFIED IN THESE DRAWINGS.
7. EXISTING CONDITIONS AND UNDERGROUND OBSTRUCTIONS SHALL BE CONFIRMED BY THE PILE INSTALLER. PROBING OR SCANNING MAY BE NECESSARY TO LOCATE UNDERGROUND OBSTRUCTIONS. REPORT ANY UNFORSEEN OBSTRUCTIONS TO THE STRUCTURAL ENGINEER.
8. PILES DAMAGED BY EXCESSIVE TORQUE OR UNDERGROUND OBSTRUCTIONS SHALL BE REPLACED AT THE CONTRACTOR'S EXPENSE.
9. LOCATIONS OF PILES SHALL NOT BE CHANGED WITHOUT APPROVAL FROM THE STRUCTURAL ENGINEER.
10. SPECIAL INSPECTION OF THE HELICAL PILE INSTALLATION SHALL BE PERFORMED IN ACCORDANCE WITH SECTION 1704.10 OF THE 2009 IBC. THE INSPECTOR SHALL RECORD THE FOLLOWING:
    A. INSTALLATION DATE.
    B. PILE MANUFACTURER.
    C. INSTALLATION CONTRACTOR.
    D. IDENTIFICATION OF INSTALLATION EQUIPMENT.
    E. MINIMUM ALLOWABLE INSTALLATION TORQUE.
    F. MAXIMUM ALLOWABLE INSTALLATION TORQUE.
    G. SHAFT DIAMETER OF EACH PILE.
    H. BEARING PLATE DIAMETER AND CONFIGURATION OF EACH PILE.
    I. ACTUAL EMBEDMENT OF EACH PILE.
    J. ACTUAL INSTALLATION TORQUE OF EACH PILE.
    K. ULTIMATE CAPACITY OF EACH PILE AS SPECIFIED BY MANUFACTURER.
    L. ALLOWABLE CAPACITY OF EACH PILE AS SPECIFIED BY MANUFACTURER.
    M. MEASURED AMOUNT OF VERTICAL REALIGNMENT (UP OR DOWN) AT EACH PILE.

REINFORCING STEEL

1. REINFORCING STEEL SHALL BE ASTM A615 GRADE 60 WITH DEFORMATIONS PER ASTM A305 AND SHALL BE DETAILED AND INSTALLED PER ACI–318, LATEST EDITION.
2. WELDED WIRE FABRIC SHALL BE 6x6xW2.9xW2.9 WWF PER ASTM A185. WWF SHALL BE SUPPLIED IN SHEETS AND SHALL BE SUPPORTED AT 18 INCHES EACH WAY ON WWF CHAIRS.
3. MINIMUM REINFORCING STEEL AND WWF CONCRETE COVER SHALL BE AS FOLLOWS:

SLABS–ON GROUND	3" FROM EARTH
GRADE BEAMS	3" BOTTOM, 3" TOP AND SIDES
DRILLED PIERS AND SPREAD FOOTINGS	3" ALL AROUND

4. WHERE FIELD SPLICES IN THE CONTINUOUS REINFORCING OCCUR, BARS SHALL BE LAPPED A DISTANCE OF 30 TIMES THE BAR DIAMETER; WWF LAPS SHALL BE 10 INCHES MINIMUM.
5. PROVIDE CORNER BARS IN THE OUTSIDE FACE OF EXTERIOR GRADE BEAMS TO MATCH THE HORIZONTAL STEEL FROM THE INTERSECTING INTERIOR AND EXTERIOR BEAMS OR BEND CONTINUOUS REINFORCING STEEL AROUND CORNERS AND OVERLAP SPLICES 30 BAR DIAMETERS.
6. AT ALL RE–ENTRANT CORNERS, PLACE 2–#5x6'–0" IN THE SLAB.
7. PROVIDE ¾" DIA x 12" @ 3'–0" O.C. A307 ANCHOR BOLTS AT ALL WOOD EXTERIOR FRAME WALLS. PROVIDE ANCHOR BOLTS 12" FROM THE END OF SILLS, DOORS, AND CORNERS. PROVIDE A MINIMUM 2 BOLTS PER SILL. EMBED ANCHOR BOLTS A MINIMUM OF 6" INTO GRADE BEAMS.

CONCRETE GENERAL NOTES

1. ALL CONCRETE REINFORCING BARS SHALL CONFORM TO ASTM A615, GRADE 60 EXCEPT WHERE NOTED. ALL REINFORCING BARS WELDED TO A STEEL SECTION SHOULD BE OF WELDABLE GRADE 40.
2. CONCRETE IN THE FOLLOWING AREA SHALL HAVE SAND AND GRAVEL AGGREGATE TYPE 1 PORTLAND CEMENT AND DESIGNATED COMPRESSIVE STRENGTH (F'C) IN 28 DAYS:

   GRADE BEAMS, PIERS & FOUNDATIONS 4000 PSI
   SLAB ON GRADE 4000 PSI
3. CONCRETE SHALL HAVE SAND AND GRAVEL AGGREGATE TYPE 1 PORTLAND CEMENT AND THE DESIGNATED COMPRESSIVE STRENGTH (F'C) IN 28 DAYS.
4. DETAILING OF CONCRETE REINFORCEMENT AND ACCESSORIES SHALL BE IN ACCORDANCE WITH ACI PUBLICATION 315, LATEST EDITION.
5. ALL MIXING, TRANSPORTING, PLACING AND CURING OF CONCRETE SHALL BE DONE IN ACCORDANCE WITH THE RECOMMENDATIONS OF THE AMERICAN CONCRETE INSTITUTE.
6. CONCRETE PROTECTION FOR REINFORCEMENT OF POURED–IN–PLACE MEMBERS:

SLAB ON GRADE	1–½ IN. TOP, 3 IN. BOTTOM
GRADE BEAMS	1–1/2 IN. TOP, 3 IN. BOTTOM, 3 IN. SIDES
DRILLED PIER	3 IN.

7. THERE SHALL BE NO HORIZONTAL CONSTRUCTION JOINTS IN CONCRETE POURS. ALL CONSTRUCTION JOINTS SHALL BE MADE IN THE CENTER OF SPANS WITH VERTICAL BULKHEADS. WHEN A BEAM INTERSECTS A GIRDER AT THIS POINT, THE JOINTS IN THE GIRDERS SHALL BE OFFSET A DISTANCE EQUAL TO TWICE THE WIDTH OF THE BEAM. THE LOCATION OF CONSTRUCTION JOINTS SHALL BE APPROVED BY THE STRUCTURAL ENGINEER. ADDITIONAL REINFORCING AT CONSTRUCTION JOINTS SHALL BE SPECIFIED BY THE ENGINEER.
8. ALL "CONTINUOUS" REINFORCEMENT SHALL HAVE MINIMUM LAP OF "B" TYPE (ACE 318–99) AT SPLICES UNLESS NOTED OTHERWISE.
9. PROVIDE STANDARD BAR CHAIRS WITH PROTECTIVE TIPS AND SPACES AT 5'–0" CENTERS FOR ALL SLABS AND BEAMS ABOVE GRADE. PROVIDE 3" x 6" x 20 GAUGE SHEET METAL BAR CHAIRS AT 4'–0" MAXIMUM CENTERS EACH WAY FOR ALL TOP REINFORCING FOR SLABS ON GRADE.
10. REINFORCING BARS MAY NOT BE WELDED WITHOUT APPROVAL OF THE STRUCTURAL ENGINEER.
11. COORDINATE ALL FOUNDATION WORK WITH PRE–ENGINEERED METAL BUILDING MANUFACTURER. SUBMIT METAL BUILDING DRAWINGS FOR ENGINEER'S APPROVAL.
12. ALL CONCRETE TESTING WILL BE ACCORDING TO ACI–318 AND/OR PROJECT SPECIFICATION MANUAL A307.
13. PROVIDE ¾" Ø x 12" LONG ANCHOR BOLTS @ 3'–0" O.C. AT ALL EXTERIOR FRAMING WALLS. PROVIDE BOLTS 12" FROM THE END OF SILLS, DOORS, AND CORNERS. PROVIDE MINIMUM 2 BOLTS PER SILL. ANCHOR BOLTS MAY BE SUBSTITUTED WITH 3/8" Ø HEAD x ¼" Ø MASONRY SCREW WITH A MINIMUM EMBEDMENT 3" MINIMUM SHEAR CAPACITY 500# AND TENSION CAPACITY 700#. SPACE MASONRY SCREW @ 12".
14. ANY PROPOSED SUBSTITUTIONS NEED TO BE AGREED UPON WITH THE OWNER TWO WEEKS PRIOR TO THE SCHEDULED PURCHASE OF THE ITEM.
15. ALL CONSTRUCTION SHALL BE STRAIGHT, PLUMB, AND TRUE, AND BUILT TO DIMENSIONS SHOWN OR REQUIRED.
16. GENERAL GOOD HOUSEKEEPING PRACTICES ARE EXPECTED ON THIS PROJECT. THE CONTRACTOR SHALL OBSERVE PARTICULARLY ANY CONDITIONS WHICH MIGHT BE UNSAFE AND TAKE PREVENTATIVE PRECAUTIONS.
17. THE GENERAL CONTRACTOR SHALL COORDINATE ALL TRADES AND SUBCONTRACTORS INVOLVED IN THIS PROJECT AND SHALL PRESENT THE BUILDING TO THE OWNER FOR ACCEPTANCE FINISHED, CLEAN, AND READY FOR OCCUPANCY.

ISSUE LOG

NO.	DATE	DESCRIPTION
A	05.15.2012	APPROVAL

CONSULTANT(S) :
Structural CSF Consulting, L.P.
11210 Steeplecrest Dr., ste 202
Houston, Texas 77065
Phone: 832-678-2110 ext. 15
Mobile: 713-806-1751
Contact: Cory Walker, P.E.
TBPE Firm No. 4395

ENGINEER

CSF
CIVIL, STRUCTURAL & FORENSIC ENGINEERING SOLUTIONS
11210 STEEPLECREST DR., SUITE 202 HOUSTON, TX. 77065
832/678-2110 FAX-832/678-2115

TBPE Firm No. 4395

INTERIM REVIEW ONLY

NOT INTENDED FOR PERMIT, BIDDING OR CONSTRUCTION

CARLOS A. GUTIERREZ, PE
TX. REG. NO. 68320

DATE: 05.15.12

PROJECT NAME :

Northwest Police Sub-Station
6000 Teague Road
Houston, Texas 77041
Foundation Repair

CITY OF HOUSTON
GENERAL SERVICES DEPARTMENT

REVIEWED :

PROGRAM MANAGER | SPONSORING DEPARTMENT

PROJECT MANAGER

DATE : MAY 15, 2012
G.F.S. No :
SCALE : 3/16" = 1'
DRAWN BY : DK
CHECKED BY : CAW

SHEET TITLE :

GENERAL NOTES

SHEET NO. :

S0.0

CITY DWG. NO. :

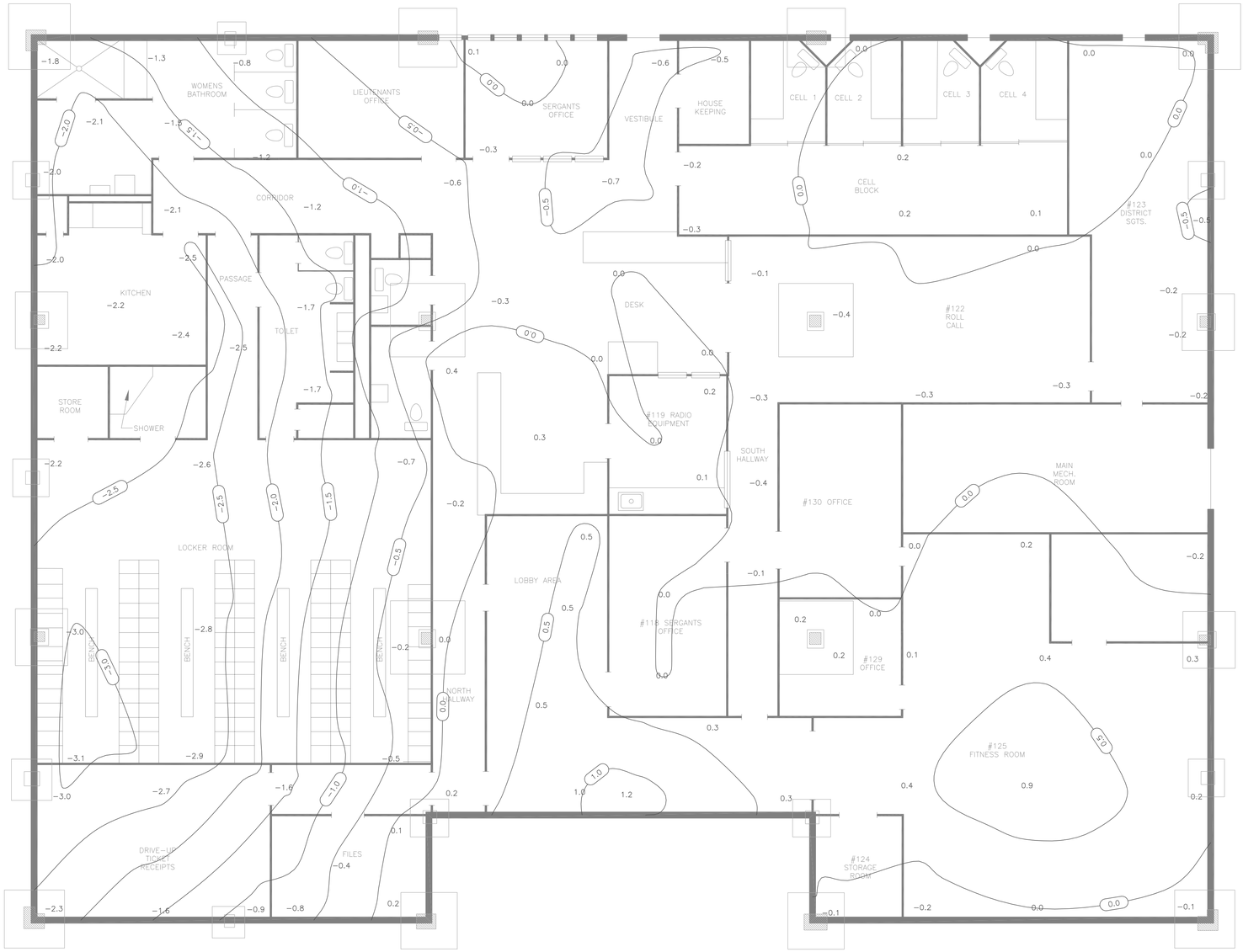

EXISTING FOUNDATION SLAB TOPOGRAPHY

GRAPHIC SCALE
0 4' 8' 16'
SCALE: 3/16" = 1'

N

ISSUE LOG

NO.	DATE	DESCRIPTION
A	05.15.2012	APPROVAL

CONSULTANT(S) :
Structural CSF Consulting, L.P.
11210 Steeplecrest Dr., ste 202
Houston, Texas 77065
Phone: 832-678-2110 ext. 15
Mobile: 713-806-1751
Contact: Cory Walker, P.E.
TBPE Firm No. 4395

ENGINEER

CSF
CIVIL, STRUCTURAL & FORENSIC ENGINEERING SOLUTIONS
11210 STEEPLECREST DR., SUITE 202 HOUSTON, TX. 77065
832/678-2110 FAX-832/678-2115

TBPE Firm No. 4395

INTERIM REVIEW ONLY

NOT INTENDED FOR PERMIT, BIDDING OR CONSTRUCTION

CARLOS A. GUTIERREZ, PE
TX. REG. NO. 68320

DATE: 05.15.12

PROJECT NAME :

Northwest Police Sub-Station
6000 Teague Road
Houston, Texas 77041
Foundation Repair

CITY OF HOUSTON
GENERAL SERVICES DEPARTMENT

REVIEWED :

PROGRAM MANAGER | SPONSORING DEPARTMENT

PROJECT MANAGER

DATE : MAY 15, 2012
G.F.S. No :
SCALE : 3/16" = 1'
DRAWN BY : DK
CHECKED BY : CAW

SHEET TITLE :

EXISTING CONDITIONS

SHEET NO. :

S1.0

CITY DWG. NO. :

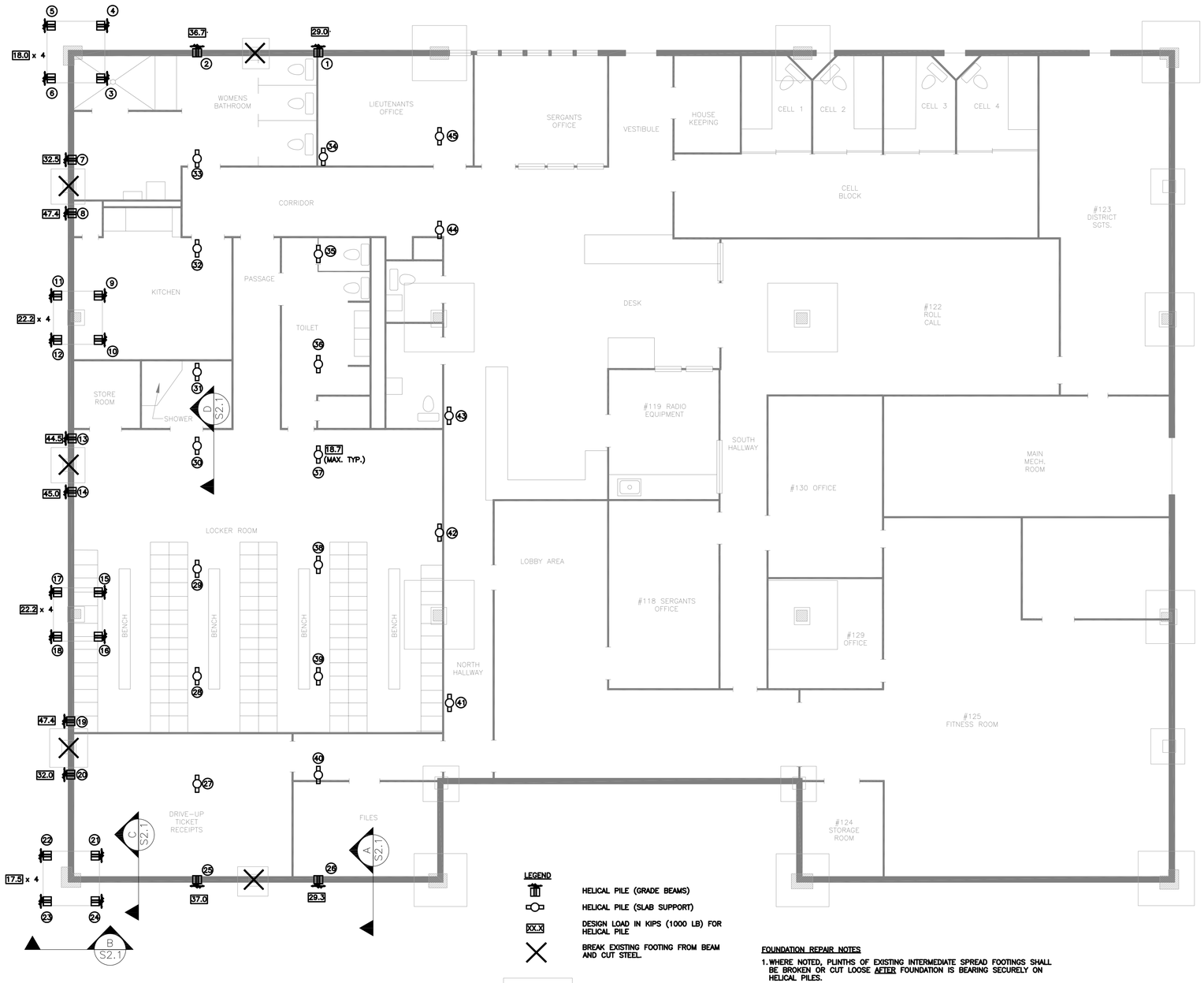

LEGEND

- HELICAL PILE (GRADE BEAMS)
- HELICAL PILE (SLAB SUPPORT)
- XX.X — DESIGN LOAD IN KIPS (1000 LB) FOR HELICAL PILE
- BREAK EXISTING FOOTING FROM BEAM AND CUT STEEL.
- EXISTING COLUMNS
- EXISTING SPREAD FOOTINGS

FOUNDATION REPAIR NOTES

1. WHERE NOTED, PLINTHS OF EXISTING INTERMEDIATE SPREAD FOOTINGS SHALL BE BROKEN OR CUT LOOSE AFTER FOUNDATION IS BEARING SECURELY ON HELICAL PILES.
2. DO NOT REALIGN OR ELEVATE FOUNDATION UNTIL PLINTHS OF INTERMEDIATE SPREAD FOOTINGS HAVE BEEN BROKEN OR CUT LOOSE.
3. ELEVATE EXISTING PRIMARY SPREAD FOOTINGS, GRADE BEAMS, AND SLAB TO MATCH ELEVATION OF THE 0.0" CONTOUR LINE SHOWN ON SHEET S1.0. DO NOT OVER LIFT.
4. SCAN FOR REBAR IN EXISTING FLOOR SLAB BEFORE CORING HOLES. EXISTING REBAR IS SPACED AT 12" O.C.E.W. DO NOT CUT EXISTING REBAR.
5. PILE NUMBERS ON PILE INSPECTION LOG SHALL CORRESPOND WITH PILE NUMBERS SHOWN ON THIS PLAN.

GRAPHIC SCALE
0 4' 8' 16'
SCALE: 3/16" = 1'

N

ISSUE LOG

NO.	DATE	DESCRIPTION
A	05.15.2012	APPROVAL

CONSULTANT(S) :
Structural CSF Consulting, L.P.
11210 Steeplecrest Dr., ste 202
Houston, Texas 77065
Phone: 832-678-2110 ext. 15
Mobile: 713-806-1751
Contact: Cory Walker, P.E.
TBPE Firm No. 4395

ENGINEER

CSF
CIVIL, STRUCTURAL & FORENSIC ENGINEERING SOLUTIONS
11210 STEEPLECREST DR., SUITE 202 HOUSTON, TX. 77065
832/678-2110 FAX-832/678-2115

TBPE Firm No. 4395

INTERIM REVIEW ONLY

NOT INTENDED FOR PERMIT, BIDDING OR CONSTRUCTION

CARLOS A. GUTIERREZ, PE
TX. REG. NO. 68320
DATE: 05.15.12

PROJECT NAME :

Northwest Police Sub-Station
6000 Teague Road
Houston, Texas 77041
Foundation Repair

CITY OF HOUSTON
GENERAL SERVICES DEPARTMENT

REVIEWED :

PROGRAM MANAGER — SPONSORING DEPARTMENT

PROJECT MANAGER

DATE : MAY 15, 2012
G.F.S. No :
SCALE : 3/16" = 1'
DRAWN BY : DK
CHECKED BY : CAW

SHEET TITLE :

UNDERPINNING PLAN

SHEET NO. :

S2.0

CITY DWG. NO. :

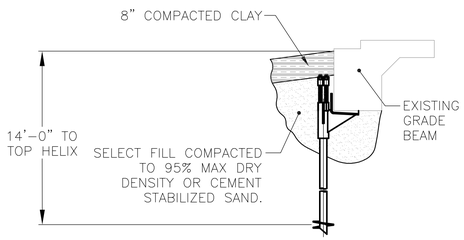

SECTION A-A
SCALE: 1/2" = 1'

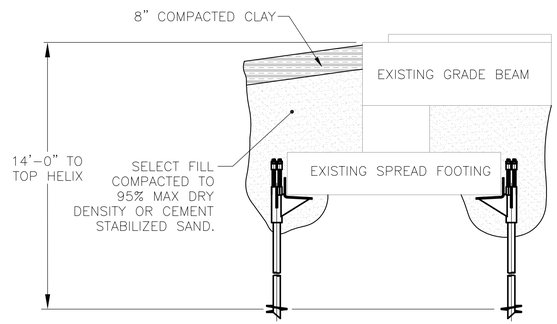

SECTION B-B
SCALE: 1/2" = 1'

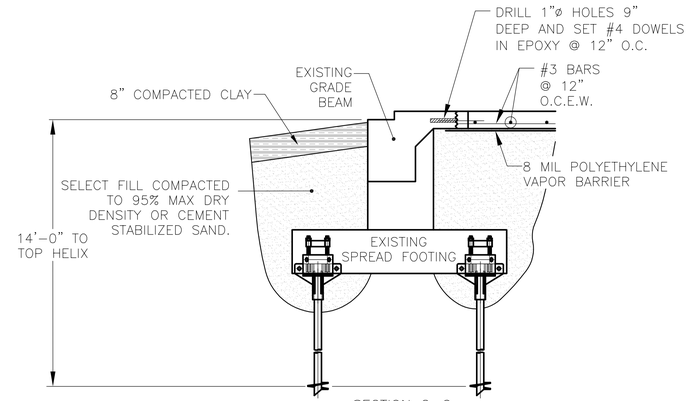

SECTION C-C
SCALE: 1/2" = 1'

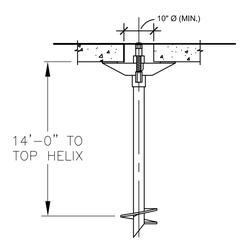

SECTION D-D
SCALE: 1/2" = 1'

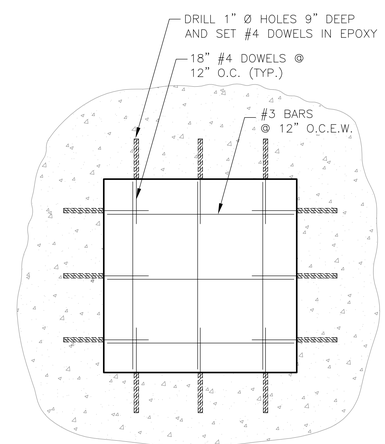

SLAB CUT-OUT REPAIR DETAIL (TYP.)
SCALE: 3/4" = 1'

NOTES: BACKFILL ACCESS HOLES WITH CEMENT STABILIZED SAND AND REPLACE VAPOR BARRIER WITH 8 MIL POLYETHYLENE. PAINT CONCRETE SIDES WITH MASTER BUILDER LPL CONCRESSIVE PASTE OR APPROVED EQUAL. FILL WITH 4,000 PSI CONCRETE. MATCH EXISTING SURFACE FINISH.

ISSUE LOG

NO.	DATE	DESCRIPTION
A	05.15.2012	APPROVAL

CONSULTANT(S) :
Structural CSF Consulting, L.P.
11210 Steeplecrest Dr., ste 202
Houston, Texas 77065
Phone: 832-678-2110 ext. 15
Mobile: 713-806-1751
Contact: Cory Walker, P.E.
TBPE Firm No. 4395

ENGINEER
CSF
CIVIL, STRUCTURAL & FORENSIC ENGINEERING SOLUTIONS
11210 STEEPLECREST DR., SUITE 202 HOUSTON, TX. 77065
832/678-2110 FAX-832/678-2115
TBPE Firm No. 4395

INTERIM REVIEW ONLY

NOT INTENDED FOR PERMIT, BIDDING OR CONSTRUCTION

CARLOS A. GUTIERREZ, PE
TX. REG. NO. 68320
DATE: 05.15.12

PROJECT NAME :

Northwest Police Sub-Station
6000 Teague Road
Houston, Texas 77041
Foundation Repair

CITY OF HOUSTON
GENERAL SERVICES DEPARTMENT

REVIEWED :

PROGRAM MANAGER
SPONSORING DEPARTMENT
PROJECT MANAGER

DATE : MAY 15, 2012
G.F.S. No :
SCALE : 3/16" = 1'
DRAWN BY : DK
CHECKED BY : CAW

SHEET TITLE :

SECTIONS

SHEET NO. :

S2.1

CITY DWG. NO. :

CONCRETE REPAIR NOTES

1. V-GROOVE CRACKS.
2. CLEAN/REMOVE DEBRIS FROM CRACKS.
3. FILL CRACKS WITH EPOXY GROUT; MASTER BUILDER LPL CONCRESSIVE PASTE OR APPROVED EQUAL.

GRAPHIC SCALE

0 4' 8' 16'

SCALE: 3/16" = 1'

N

ISSUE LOG

NO.	DATE	DESCRIPTION
A	05.15.2012	APPROVAL

CONSULTANT(S) :

Structural CSF Consulting, L.P.
11210 Steeplecrest Dr., ste 202
Houston, Texas 77065
Phone: 832-678-2110 ext. 15
Mobile: 713-806-1751
Contact: Cory Walker, P.E.
TBPE Firm No. 4395

ENGINEER

CSF
CIVIL, STRUCTURAL & FORENSIC ENGINEERING SOLUTIONS
11210 STEEPLECREST DR., SUITE 202 HOUSTON, TX. 77065
832/678-2110 FAX-832/678-2115

TBPE Firm No. 4395

INTERIM REVIEW ONLY

NOT INTENDED FOR PERMIT, BIDDING OR CONSTRUCTION

CARLOS A. GUTIERREZ, PE
TX. REG. NO. 68320

DATE: 05.15.12

PROJECT NAME :

Northwest Police Sub-Station
6000 Teague Road
Houston, Texas 77041
Foundation Repair

CITY OF HOUSTON
GENERAL SERVICES DEPARTMENT

REVIEWED :

PROGRAM MANAGER

SPONSORING DEPARTMENT

PROJECT MANAGER

DATE : MAY 15, 2012
G.F.S. No :
SCALE : 3/16" = 1'
DRAWN BY : DK
CHECKED BY : CAW

SHEET TITLE :

CONCRETE REPAIR

SHEET NO. :

S3.0

CITY DWG. NO. :