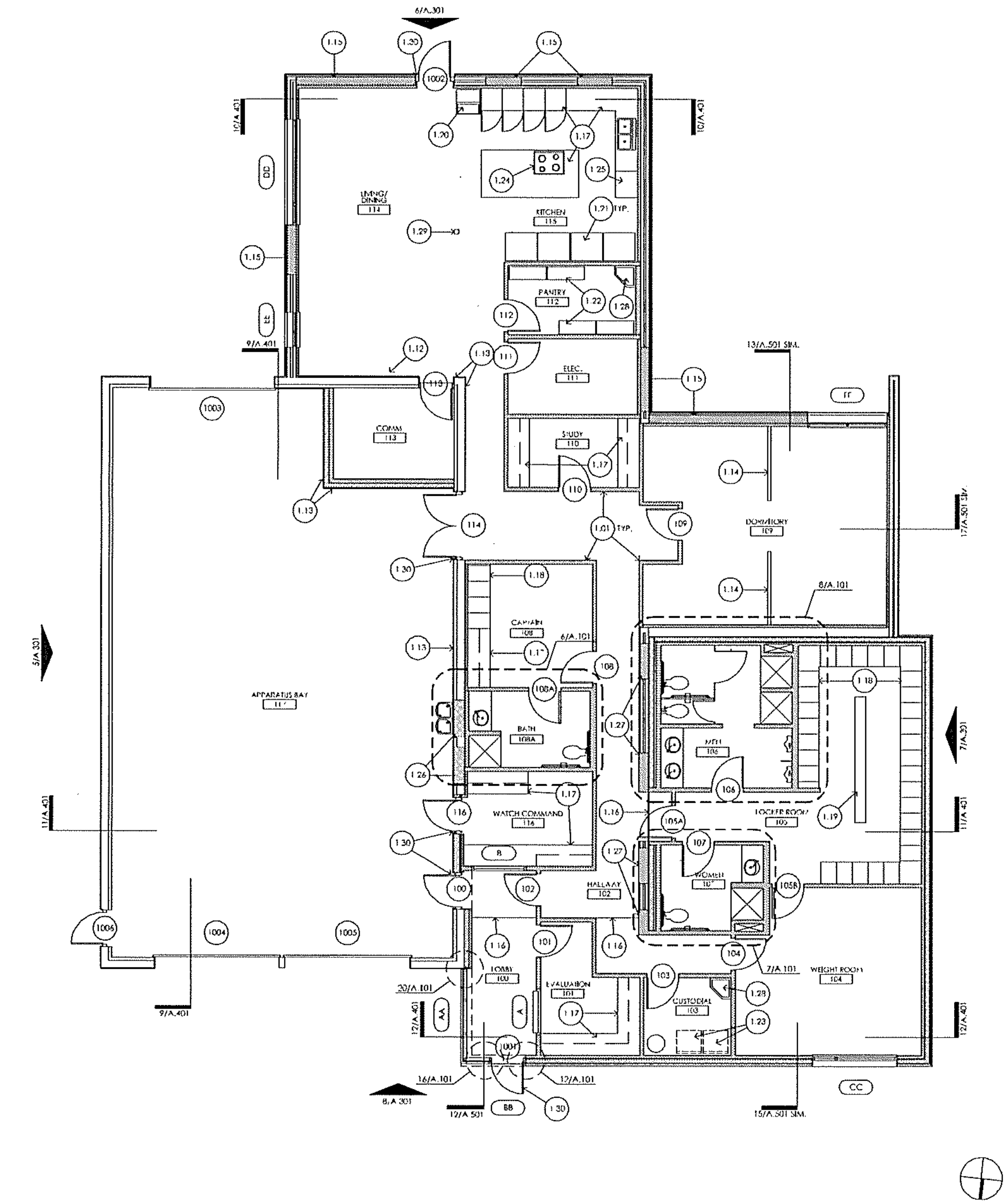

RENOVATION FLOOR PLAN | 3/16" = 1'-0" | 9

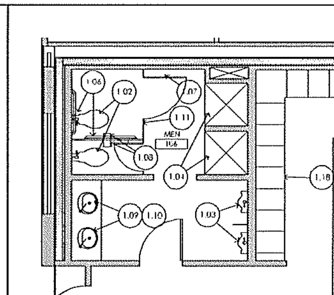

MEN'S ROOM ENLARGED PLAN | 8

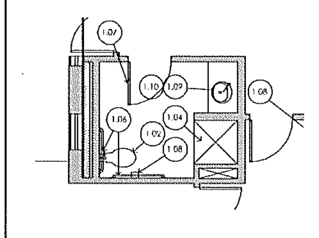

WOMEN'S ROOM ENLARGED PLAN | 7

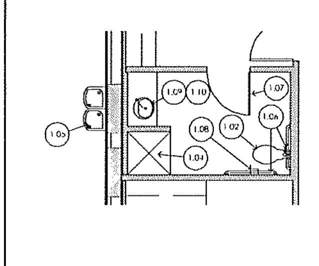

CAPTAIN'S RESTROOM | 6

Toilet Accessory Schedule

Manufacturer	Model Description	Model Number	Finish	Remarks
Bobrick	Toilet Paper Dispenser	B-2740	Satin Finish	Surface Mounted
Bobrick	Grab Bars	B-6806 x 36	Satin Finish	Surface Mounted
Bobrick	Grab Bars	B-6806 x 42	Satin Finish	Surface Mounted
Bobrick	Sanitary Napkin Disposal Unit	B-254	Satin Finish	Surface Mounted
Bobrick	Coat Hook	B-76727	Satin Finish	Surface Mounted
Scranton	Toilet Partitions		Gray	
Scranton	Urinal Screen		Gray	

TOILET ACCESSORIES | 5

Renovation Keyed Notes

1.01 New gyp. board partitions. Refer to partition schedule for requirements.
1.02 New floor mounted water closet. Re: accessibility plans for mounting locations and requirements
1.03 New wall mounted urinal. Re: accessibility plans for mounting locations and requirements
1.04 New shower, level at floor. Provide cementitious backer board for application tile. Provide Laticrete waterproofing at floor for floor tile installation.
1.05 New dual-height electric drinking fountain.
1.06 New accessible grab bars. Re: accessibility plans for mounting locations and requirements
1.07 New coat hook, mounted centered in door @ 42" AFF.
1.08 New toilet paper dispenser. Re: accessibility plans for mounting locations and requirements
1.09 New counter sunk lavatory at counter. Top of counter at 34" AFF
1.10 Install paper towel/soap dispensers at lavatory/counter.
1.11 New floor mounted, overhead braced toilet partition.
1.12 New millwork TV above. Re: interior elevations for add'l information.
1.13 Thin brick at interior wall. Re: interior elevations for add'l information.
1.14 New half height wall with wood trim at cap
1.15 At exterior wall, infill openings with 4" masonry to above 36" AFF. Openings above 36" to be infilled with stud framing/sheathing. Re: Wall Sections
1.16 Expansion joint at existing/new building.
1.17 New millwork, by Owner
1.18 New millwork personnel lockers, 18" wide x 24" deep, by Owner
1.19 New millwork bench, by Owner
1.20 Icemaker, by Owner.
1.21 Refrigerators, by Owner
1.22 Shelving units, by Owner
1.23 Washer & dryer, by Owner.
1.24 Gas cooktop, by Owner.
1.25 Cabinet-mounted dual oven.
1.26 12" CMU infill, full-height of existing opening.
1.27 8" CMU infill, full-height of existing opening.
1.28 Floor mounted utility sink.
1.29 Steel column, Re: Structural.
1.30 Flood-barrier at scheduled door. Re: G.030 for add'l reqmts

RENOVATION KEYED NOTES | 3

FP1 Refer to General sheets for typical graphic, symbols, abbreviation index, Master Keynote list, accessibility Guidelines, etc.

FP2. Typical walls are type 'B3' unless noted otherwise.

FP3. Refer to Sheet A.820 for information on Doors & Windows and Finish Selections.

FP4. Refer to Sheet G.030 for flood-proofing requirements.

FP5 All horizontal dimensions are provided on plans, and all vertical dimensions are provided on elevations and/or sections U.N.O. All dimensions are to be tied to a column line. Contractor will immediately report any omission of dimensions not tied to a column to the Architect prior to start of construction.

FP6 Overall plan indicates exterior building dimensions, room numbers and names, door designations, window designations, exterior elevation designations, exterior plan designations, sign designations, and building section designations. All other plan information is indicated on referenced enlarged plans.

FP7 Enlarged plans indicate interior building dimensions to face of partition material, interior plan detail designations, interior elevation designations, partition type designations, finish designations, and general building material.

FP8 Provide adequate blocking as required at every location where millwork, wall light fixtures, TV brackets, plumbing fixtures, etc. are to be mounted.

FP9. There are items shown, i.e. outlets, switches, thermostats, on the MEP drawings that are not drawn on the architectural plans. Contractor to coordinate and mount all MEP items per Architectural sheet A.730 unless noted otherwise. Coordinate all MEP access panels not shown on architectural construction documents with Architect prior to installation.

FP10. All wood blocking to be Fire Resistant.

FP11. Coordinate location of floor/wall mounted receptacles with kneespace locations.

FP12 Receptacles mounted above countertops/backsplashes are to be 42" AFF to centerline of coverplate and are to be installed horizontally.

GENERAL NOTES | 1

RYDEN ARCHITECTURE
commercial | residential | planning
1252 thornton road
houston, texas 77018
713.206.6893 (v)
contact: greg ryden, aia

10-23-2014

Consultant Engineers:

MEP
Henderson Engineers
3535 Briarpark Drive, Suite 200
Houston, Texas 77042
Office: (713) 783-7707
Contact: David Darby, PE
Email: david.darby@hei-eng.com

Structural & Civil
CSF Consulting Engineers
11301 Fallbrook Suite 320
Houston, Texas 77065
Office: (832) 678-2110
Contact: Carlos Gutierrez, PE
Email: carlosg@csfengineers.com

City of Houston | HFD
Fire Station 13 Renovations and Addition
2215 W. 43rd Street | Houston, Texas 77018

Ownership of Instruments of Service
All reports, plans, specifications, computer files, field data, notes & other documents and instruments prepared by Ryden Architecture, LLC as instruments of service shall remain the property of Ryden Architecture, LLC. Ryden Architecture, LLC shall retain all common law, statutory and other reserved rights, including the copyright thereto.

Issue:
10.23.2014 Permit

Project No. 14005

Renovation Floor Plan Annotations

A.101

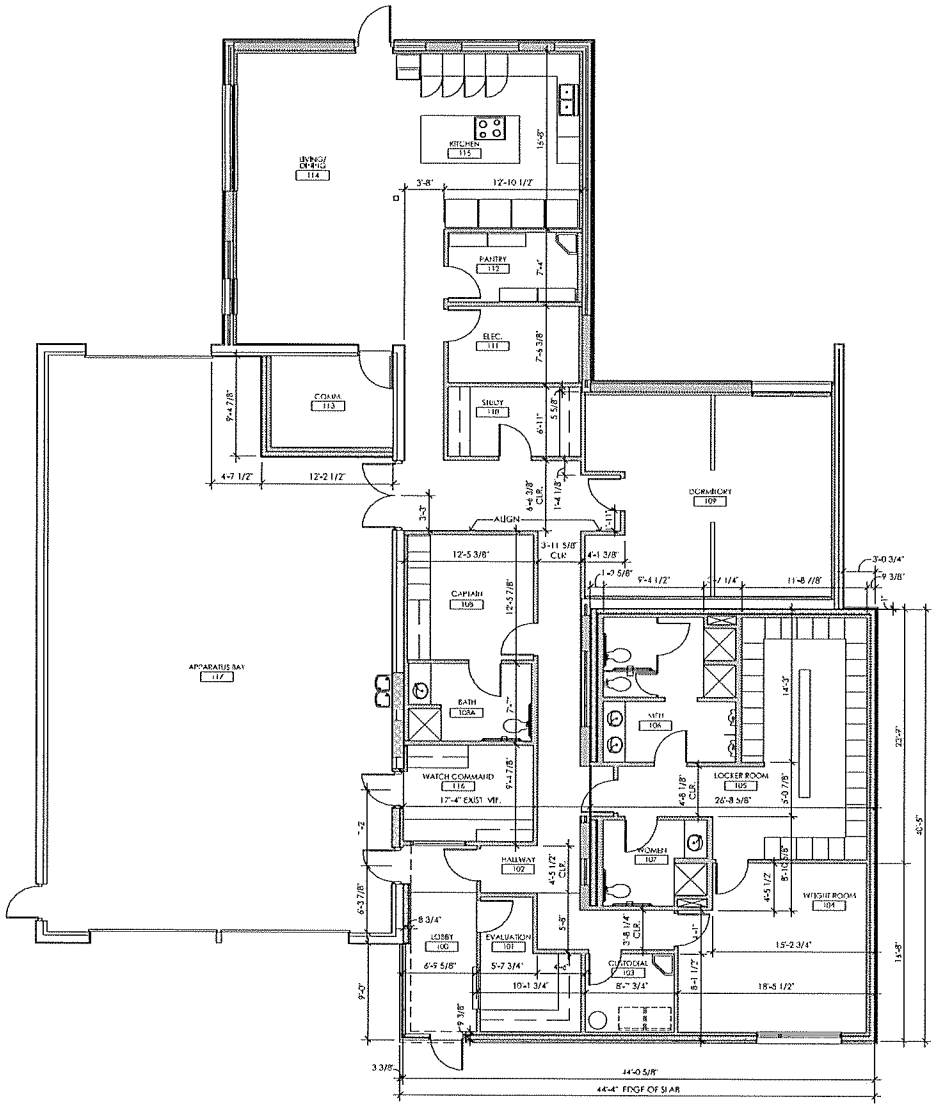

RENOVATION FLOOR PLAN 3/16" = 1'-0" | 9

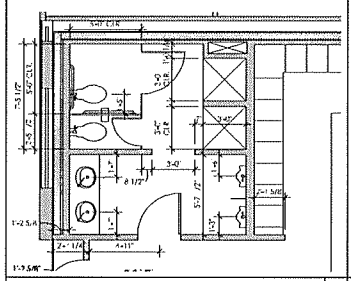

MEN'S ROOM ENLARGED PLAN | 8

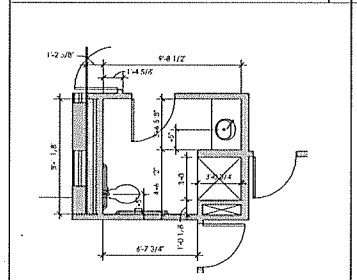

WOMEN'S ROOM ENLARGED PLAN | 7

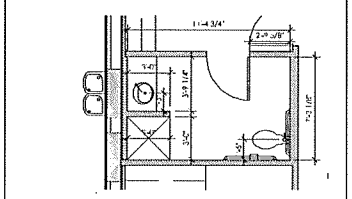

CAPTAIN'S RESTROOM | 6

Accessories	Model		Finish	Remarks
	Manufacturer	Model		
Mirror	Bobrick Dispensers	As-Noted	Stainless	Surface mounted
Mirror	Gatco Bars	5-4x4 + 36	Stainless	Surface mounted
Mirror	Gatco Bars	5-4x4 + 42	Stainless	Surface mounted
Mirror	Chicago Faucets Faucets	As-Noted	Stainless	Surface mounted
Mirror	Grab Bars	5-4x4 + 42	Stainless	Surface mounted
Screenline	Toilet Partitions		Grey	
Screenline	Urinal Screens		Grey	

TOILET ACCESSORIES | 5

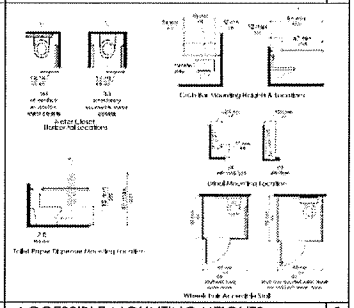

ACCESSIBLE MOUNTING HEIGHTS | 3

4	
2	
1	

RYDEN ARCHITECTURE
commercial | residential | planning
1252 thornton road
houston, texas 77018
713.206.6893 (v)
contact: greg ryden, aia

Consultant Engineers:

MEP Henderson Engineers
3535 Briarpark Drive, Suite 200
Houston, Texas 77042
Office: (713) 783-7707
Contact: David Darby, PE
Email: david.darby@hel-eng.com

Structural & Civil CSF Consulting Engineers
11301 Fallbrook Suite 320
Houston, Texas 77065
Office: (832) 678-2110
Contact: Carlos Gutierrez, PE
Email: carlosg@csfengineers.com

City of Houston | HFD
Fire Station 13 Renovations and Addition
2215 W. 43rd Street | Houston, Texas 77018

Ownership of Instruments of Service:
All reports, plans, specifications, computer files, field data, notes & other documents and instruments prepared by Ryden Architecture, LLC as instruments of service shall remain the property of Ryden Architecture, LLC. Ryden Architecture, LLC shall retain all common law, statutory, and other reserved rights, including the copyright thereto.

Issue	
10.23.2014	Permit

Project No. 14005

Renovation Floor Plan Dimensions

A.102

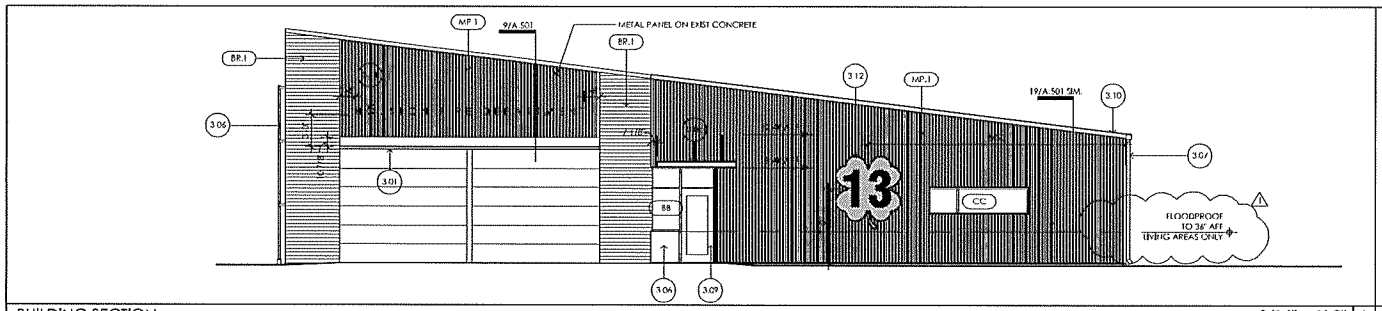

BUILDING SECTION 3/16" = 1'-0" | 8

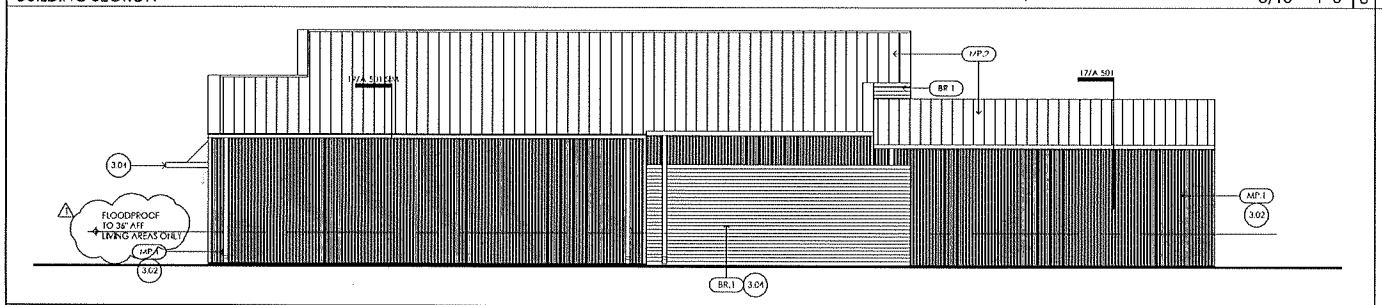

BUILDING SECTION 3/16" = 1'-0" | 7

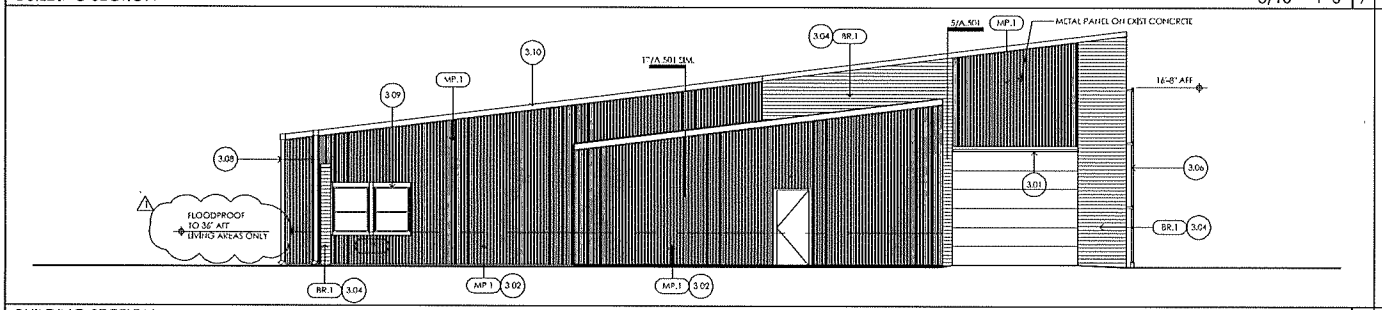

BUILDING SECTION 3/16" = 1'-0" | 6

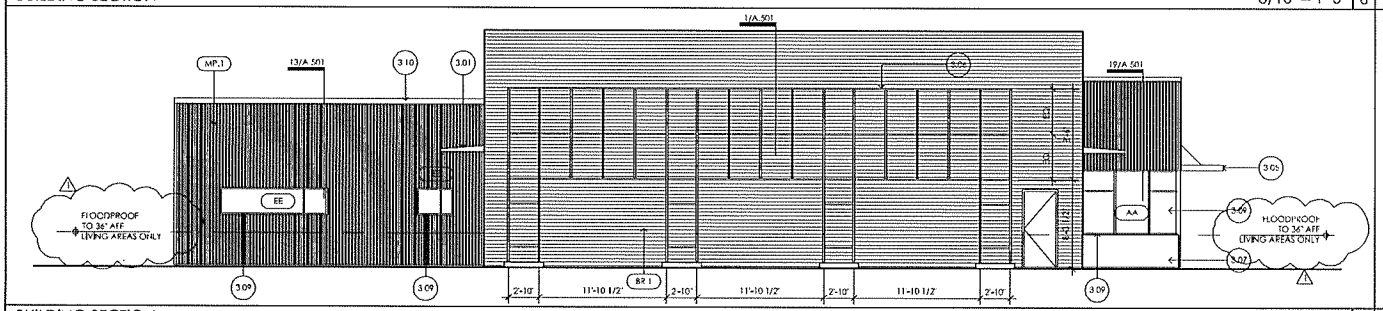

BUILDING SECTION 3/16" = 1'-0" | 5

EXTERIOR MATERIAL SELECTION SCHEDULE

MATERIAL	FINISH MARK	MANUFACTURER	PRODUCT NAME	NOTES
TERRACOTTA	TT.1	[illegible]	[illegible]	
CONCRETE	CC.1	N/A	N/A	EXPOSED ARCHITECTURAL CONC.
METAL PANEL	MP.1	[illegible]	[illegible]	[illegible]
	MP.2	[illegible]	[illegible]	[illegible]

NOTES:
1. [illegible]
2. LOW SLOPE ROOF SURFACE AND COLOR TO COMPLY WITH ENERGY STAR & ASHRAE 90.1-2007 COOL ROOF REQUIRE
3. WALL PANEL NOT PROVIDED VERTICAL EXPOSITION TERMINATION TO BE CONCRETE
4. EXPOSED ARCHITECTURAL CONCRETE SURFACES TO BE FORMED WITH THE FINISH IN MIND

EXTERIOR FINISH SCHEDULE | 4

Elevation Notes

3.01 Painting concrete canopy
3.02 New pre-finished metal wall panel
3.03 New standing seam metal roof, by others
3.04 New thin veneer brick. Prep existing erosion, surface for new finish
3.05 Aluminum canopy & turnbuckles
3.06 New painted steel trellis Ref. 2/A.301.
3.07 Architectural exposed concrete.
3.08 Prefinished metal gutter & downspout
3.09 New aluminum window frame & glazing.
3.10 Prefinished metal louvers
3.11 Illuminated LED channel letters, equally spaced as indicated
3.12 Red hill HFD clover sign. Ref. 1/A.301

KEYED NOTES | 3

E1 Refer to general information sheets for typical graphical symbols, and abbreviation index

E2. Refer to sheet G.030 for accessibility guidelines.

E3 All horizontal dimensions are provided on plans, and all vertical dimensions are provided on elevations and/or sections unless otherwise noted

E4 Provide adequate blocking as required at every location where millwork, wall light fixtures, TV brackets, plumbing fixtures, etc. are to be mounted. Item are required to hold 250 pound point load

E5 There are items shown, i.e. outlets, switches, thermostats, on the MEP drawings that are not shown on the architectural elevations. Contractor to coordinate and mount all MEP items per architectural sheet A.750 unless noted otherwise.

E6 Refer to finish schedule and plans for all finishes unless noted otherwise.

E7 Refer to the equipment schedule for all installed equipment. Equipment is designed on enlarged floor plans

GENERAL NOTES | 2

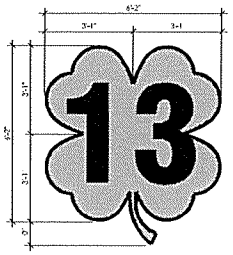

1

RYDEN ARCHITECTURE
commercial | residential | planning
1252 thornton road
houston, texas 77018
713.206.6893 (v)
contact: greg ryden, aia

Consultant Engineers:

MEP
Henderson Engineers
3535 Briarpark Drive, Suite 200
Houston, Texas 77042
Office: (713) 783-7707
Contact: David Darby, PE
Email: david.darby@hei-eng.com

Structural & Civil
CSF Consulting Engineers
11301 Fallbrook Suite 320
Houston, Texas 77065
Office: (832) 678-2110
Contact: Carlos Gutierrez, PE
Email: carlosg@csfengineers.com

City of Houston | HFD
Fire Station 13 Renovations and Addition
2215 W. 43rd Street | Houston, Texas 77018

Ownership of Instruments of Service
All reports, plans, specifications, computer files, field data, notes & other documents and instruments prepared by Ryden Architecture, LLC on instruments of service shall remain the property of Ryden Architecture, LLC. Ryden Architecture, LLC shall retain all common law, statutes, and other reserved rights, including the copyright thereto.

Issues

	10.23.2014	Permit
1	11.19.2014	Permit Resubmit

Project No. 14005

Exterior Elevations

A.301

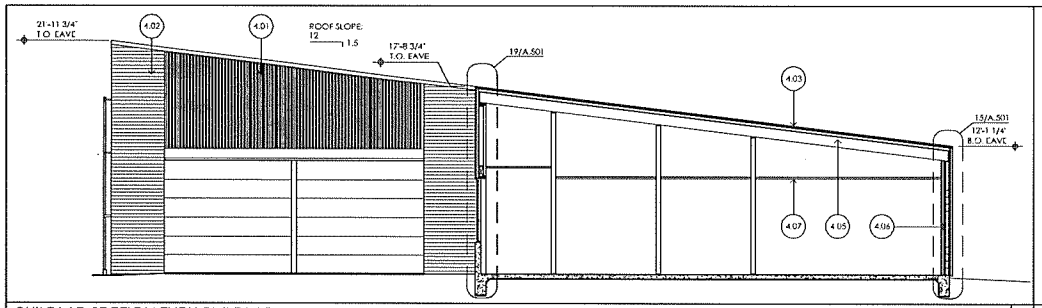

BUILDING SECTION THRU BUILDING ADDITION | 12

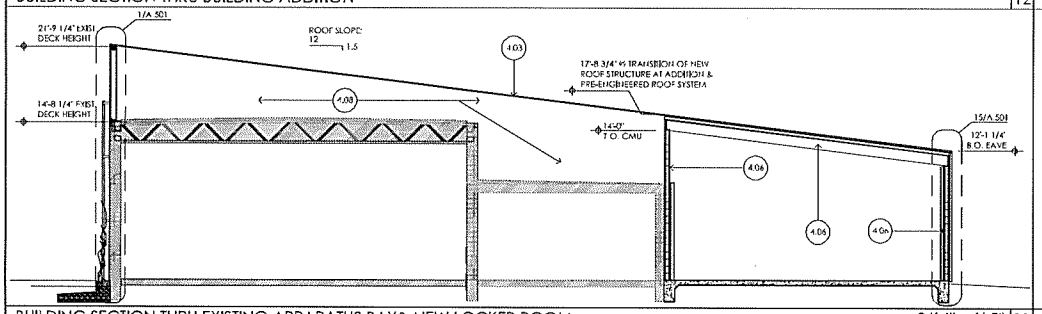

BUILDING SECTION THRU EXISTING APPARATUS BAY& NEW LOCKER ROOM 3/16" = 1'-0" | 11

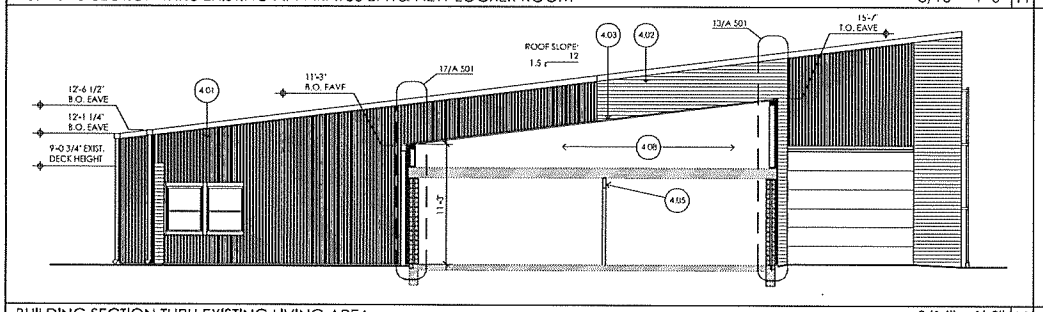

BUILDING SECTION THRU EXISTING LIVING AREA 3/16" = 1'-0" | 10

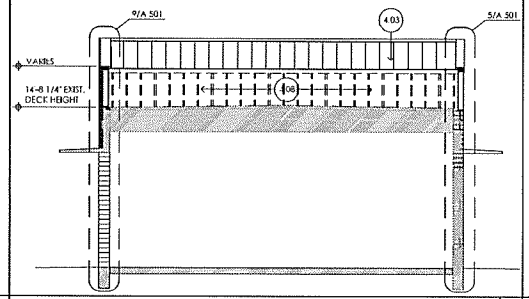

| 13 | BUILDING SECTION THRU EXISTING APPARATUS BAY 3/16" = 1'-0" | 9 |

	8	7	6	5

Building Section Notes

4.01	Prefinished metal panel
4.02	Thin brick veneer on cast masonry
4.03	Stock glulam rafters, by others
4.04	Aluminum canopy
4.05	Wood Beam. Re: Structural
4.06	4" CMU
4.07	Ceiling. Re: Finish Schedule
4.08	Pre-engineered retrofit roof framing system, by Others

KEYED NOTES | 4

WS1	Refer to general information sheets for typical graphic symbols & abbreviation index
WS2	Refer to Texas Accessibility Guidelines sheet(s).
WS3	All horizontal dimensions are provided on plans, and all vertical dimensions are provided on elevations and/or sections unless otherwise noted
WS4	Provide adequate blocking as required at every location where wall light fixtures, plumbing fixtures, etc. are to be mounted. Items are required to resist 250 pound point load
WS5	There are items shown, i.e. outlets, switches, on the MEP drawings that are not drawn on the architectural elevations. Contractor to coordinate and mount all MEP items unless noted otherwise
WS6	Refer to finish schedule and plans for all finishes unless noted otherwise
WS7	Refer to the equipment schedule for all installed equipment. Equipment is designated on enlarged floor plans.

GENERAL NOTES | 3

RYDEN ARCHITECTURE
commercial | residential | planning
1252 thornton road
houston, texas 77018
713 206 6893 (v)
contact: greg ryden, aia

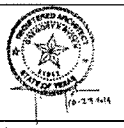

Consultant Engineers:

MEP — Henderson Engineers
3535 Briarpark Drive, Suite 200
Houston, Texas 77042
Office: (713) 783-7707
Contact: David Darby, PE
Email: david.darby@heleng.com

Structural & Civil — CSF Consulting Engineers
11301 Fallbrook Suite 320
Houston, Texas 77065
Office: (832) 678-2110
Contact: Carlos Gutierrez, PE
Email: carlosg@csfengineers.com

City of Houston | HFD
Fire Station 13 Renovations and Addition
2215 W. 43rd Street | Houston, Texas 77018

Ownership of Instruments of Service
All reports, plans, specifications, computer files, field data, notes & other documents and instruments prepared by Ryden Architecture LLC as instruments of service shall remain the property of Ryden Architecture, LLC. Ryden Architecture, LLC shall retain all common law, statutory, and other reserved rights, including the copyright thereto.

Issues	
10.23.2014	Permit

Project No. 14005

Building & Wall Sections

A.401

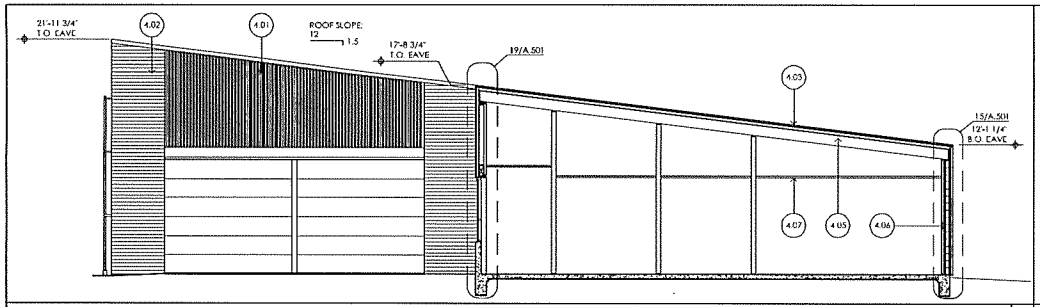

BUILDING SECTION THRU BUILDING ADDITION 12

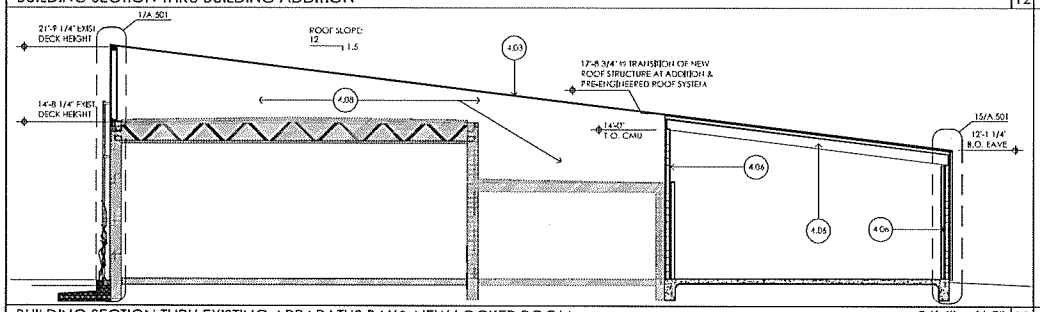

BUILDING SECTION THRU EXISTING APPARATUS BAY& NEW LOCKER ROOM 3/16" = 1'-0" 11

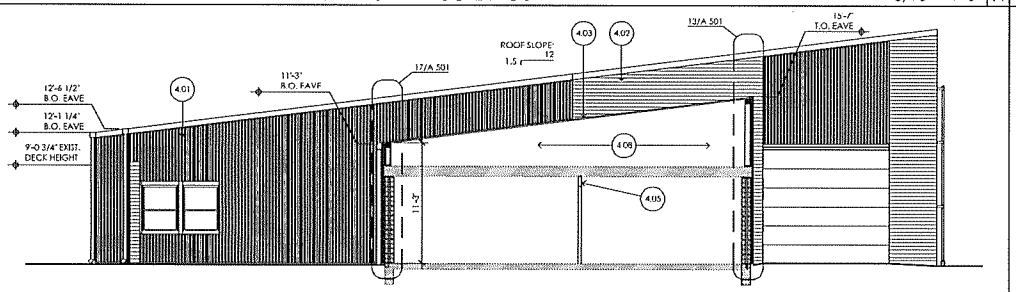

BUILDING SECTION THRU EXISTING LIVING AREA 3/16" = 1'-0" 10

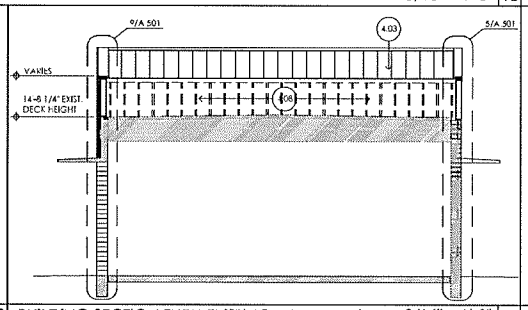

13 BUILDING SECTION THRU EXISTING APPARATUS BAY 3/16" = 1'-0" 9

Building Section Notes

4.01	Prefinished metal panel
4.02	Thin brick veneer on cast masonry
4.03	Standing seam metal roof, by Others
4.04	Aluminum canopy
4.05	Wood Beam. Re: Structural
4.06	6" Cmu
4.07	Ceiling. Re: Finish Schedule.
4.08	Pre-engineered rebuilt roof framing systems, by Others

8 KEYED NOTES 4

WS1	Refer to general information sheets for typical graphic, symbols & abbreviation index
WS2	Refer to Texas Accessibility Guidelines sheet(s)
WS3	All horizontal dimensions are provided on plans, and all vertical dimensions are provided on elevations and/or sections unless otherwise noted
WS4	Provide adequate blocking as required at every location where wall light fixtures, plumbing fixtures, etc., are to be mounted. Items are required to resist 250 pound point load
WS5	There are items shown, i.e. outlets, switches, on the MEP drawings that are not shown on the architectural elevations. Contractor to coordinate and mount all MEP items unless noted otherwise
WS6	Refer to finish schedule and plans for all finishes unless noted otherwise
WS7	Refer to the equipment schedule for all installed equipment. Equipment is designed on enlarged floor plans.

7 GENERAL NOTES 3

6 3

5 1

RYDEN ARCHITECTURE
commercial | residential | planning
1252 thornton road
houston, texas 77018
713.206.6893 (v)
contact: greg ryden, aia

Consultant Engineers:

MEP Henderson Engineers
3535 Briarpark Drive, Suite 200
Houston, Texas 77042
Office: (713) 783-7707
Contact: David Darby, PE
Email: david.darby@hel-eng.com

Structural & Civil CSF Consulting Engineers
11301 Fallbrook Suite 320
Houston, Texas 77065
Office: (832) 678-2110
Contact: Carlos Gutierrez, PE
Email: carlosg@csfengineers.com

City of Houston | HFD
Fire Station 13 Renovations and Addition
2215 W. 43rd Street | Houston, Texas 77018

Ownership of Instruments of Service
All reports, plans, specifications, computer files, field data notes & other documents and instruments prepared by Ryden Architecture, LLC as instruments of service shall remain the property of Ryden Architecture, LLC. Ryden Architecture, LLC shall retain all common law, statutory, and other reserved rights, including the copyright thereto.

Issues	
10.23.2014	Permit

Project No. 14005

Building & Wall Sections

A.401

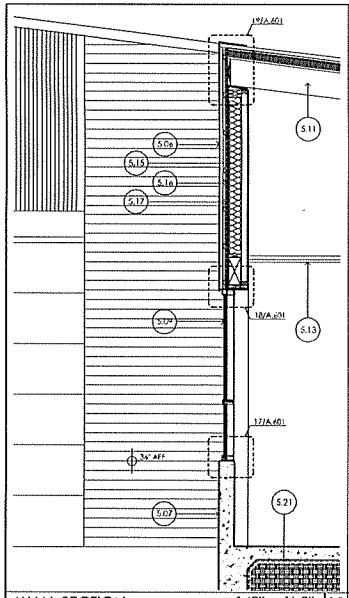

WALL SECTION 1/2" = 1'-0" | 19

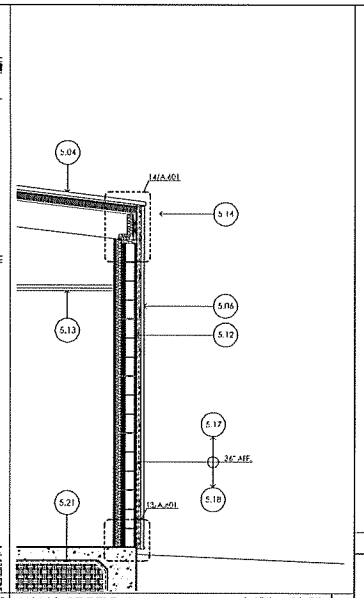

WALL SECTION 1/2" = 1'-0" | 15

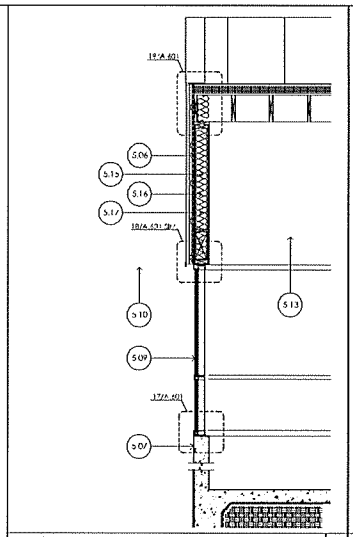

WALL SECTION 3/16" = 1'-0" | 12

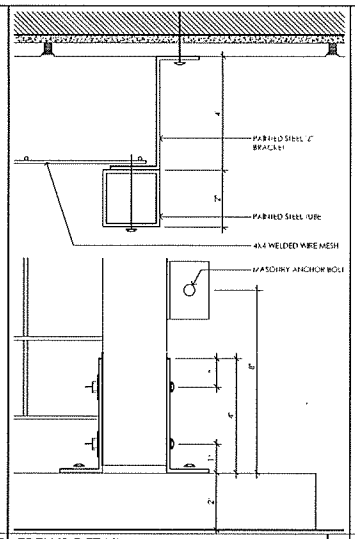

TRELLIS DETAIL | 8

Wall Section Notes

5.01	Existing double-wyeth load bearing masonry wall
5.02	Existing concrete canopy
5.03	Existing steel joists
5.04	New prefinished standing seam metal roof, (by others)
5.05	New roof preengineered roof framing system, (by others)
5.06	Prefinished metal panel. Re: Finish Schedule
5.07	Exposed architectural concrete wall. Re: Structural
5.08	Thin brick veneer masonry
5.09	Scheduled window framing
5.10	Aluminum canopy
5.11	Wood Beam/Joist. Re: Structural
5.12	6" CMU
5.13	Ceiling. Re: Finish Schedule
5.14	Prefinished metal gutter & downspout. Match wall panel.
5.15	Pre wood framing
5.16	1/2" dens glass sheathing
5.17	Vapor Barrier
5.18	Floodproofing Membrane
5.19	Painted steel trellis
5.20	Prefinished metal coping
5.21	Continuous sub-grade vapor membrane

KEYED NOTES | 4

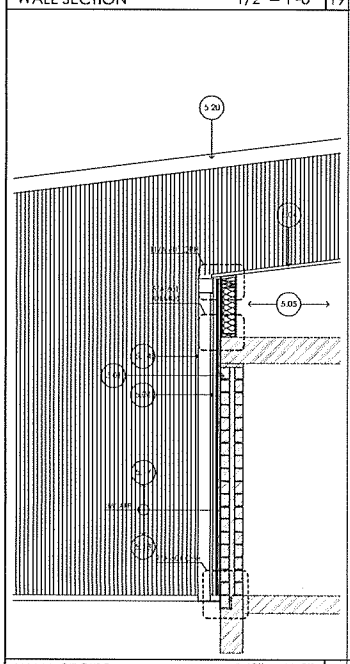

WALL SECTION 1/2" = 1'-0" | 17

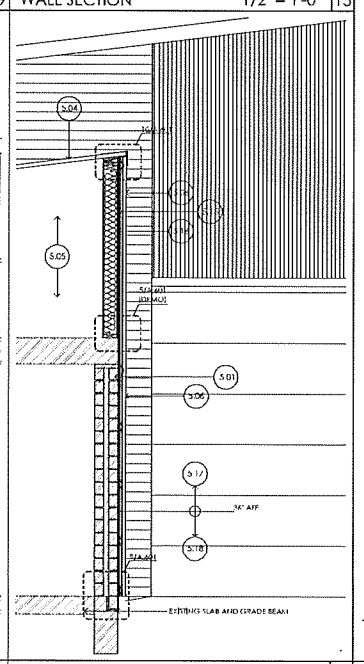

WALL SECTION 1/2" = 1'-0" | 13

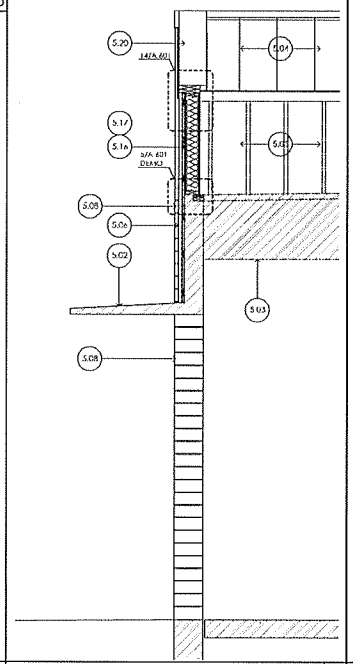

WALL SECTION 1/2" = 1'-0" | 9

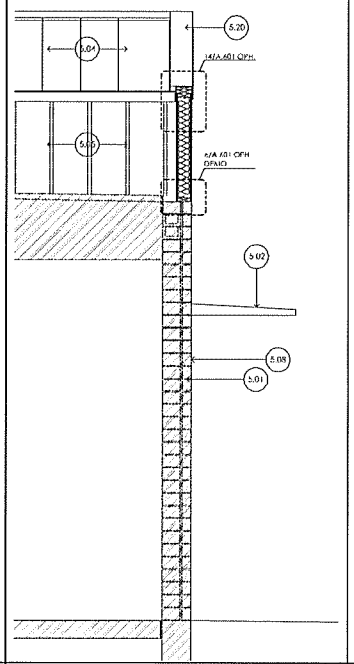

WALL SECTION 1/2" = 1'-0" | 5

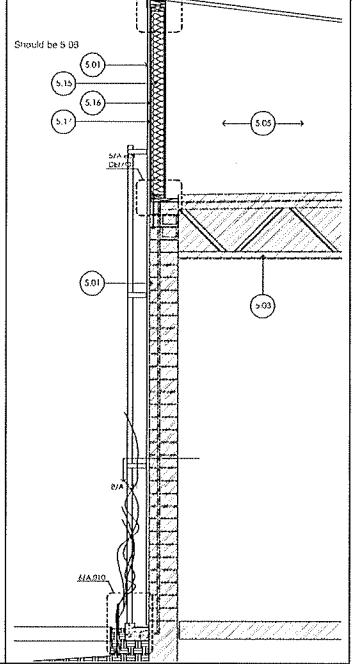

WALL SECTION 1/2" = 1'-0" | 1

RYDEN ARCHITECTURE
commercial | residential | planning
1252 thornton road
houston, texas 77018
713 206 6893 (v)
contact: greg ryden, aia

Consultant Engineers:

MEP
Henderson Engineers
3535 Briarpark Drive, Suite 200
Houston, Texas 77042
Office: (713) 783-7707
Contact: David Darby, PE
Email: david.darby@hel-eng.com

Structural & Civil
CSF Consulting Engineers
11301 Fallbrook Suite 320
Houston, Texas 77065
Office: (832) 678-2110
Contact: Carlos Gutierrez, PE
Email: carlosg@csfengineers.com

City of Houston | HFD
Fire Station 13 Renovations and Addition
2215 W. 43rd Street | Houston, Texas 77018

Ownership of Instruments of Service
All reports, plans, specifications, computer files, field data, notes & other documents and instruments prepared by Ryden Architecture, LLC as instruments of service shall remain the property of Ryden Architecture, LLC. Ryden Architecture, LLC shall retain all common law, statutory, and other reserved rights, including the copyright thereto.

Issue:
10.23.2014 Permit

Project No. 14005

Wall Sections & Details

A.501

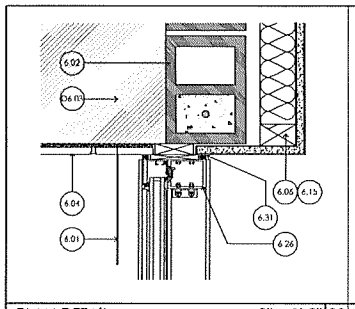

PLAN DETAIL 3" = 1'-0" 20

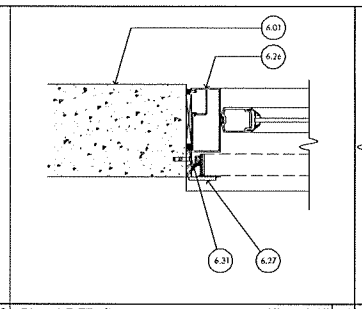

PLAN DETAIL 3" = 1'-0" 16

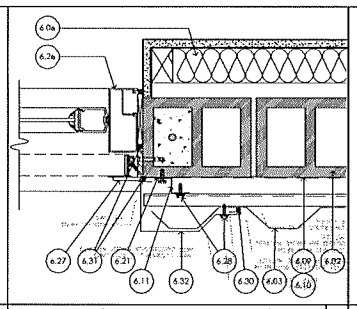

PLAN DETAIL 3" = 1'-0" 12

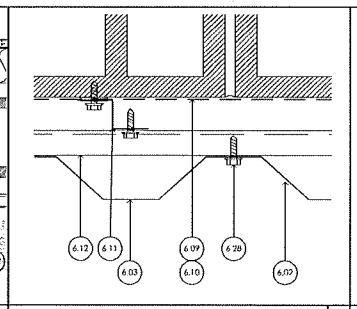

PLAN DETAIL 6" = 1'-0" 8

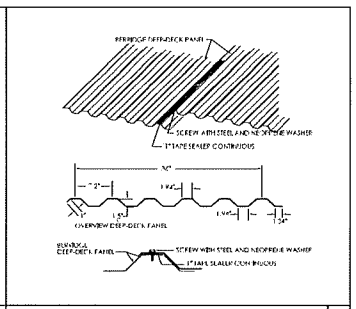

METAL PANEL INFO 4

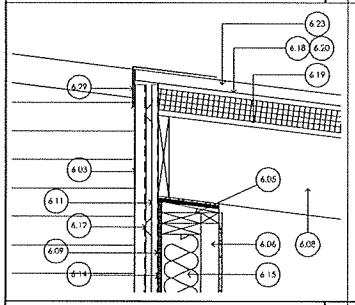

SECTION DETAIL 1 1/2" = 1'-0" 19

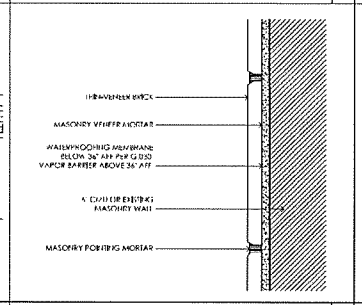

SECTION DETAIL 6" = 1'-0" 15

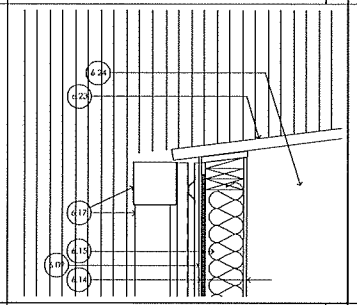

SECTION DETAIL 1 1/2" = 1'-0" 11

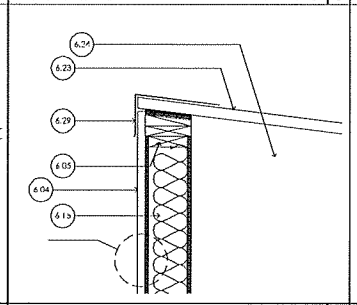

SECTION DETAIL 1 1/2" = 1'-0" 7

3

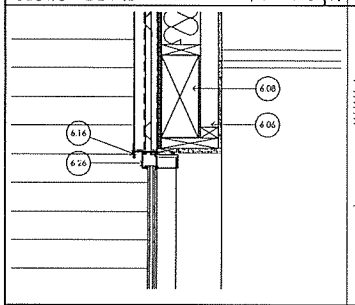

SECTION DETAIL 1 1/2" = 1'-0" 18

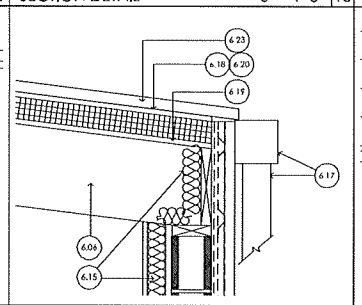

SECTION DETAIL 1 1/2" = 1'-0" 14

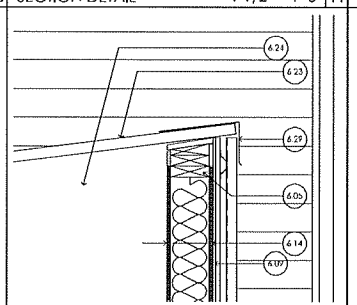

SECTION DETAIL 1 1/2 = 1'-0" 10

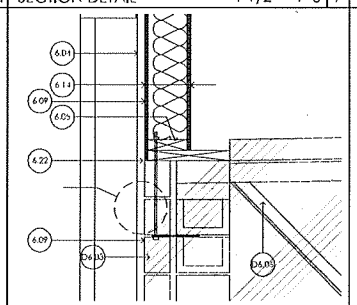

SECTION DETAIL 1 1/2 = 1'-0" 6

Demolition

D6.01 Remove existing sheet metal parapet cap in its entirety.
D6.02 Existing roof system to be removed as required
D6.03 Existing load bearing masonry wall
D6.04 Existing brick masonry wall to be removed as indicated
D6.05 Existing steel anchor bolt to remain reuse in new assembly.
D6.06 Existing steel plate.

Detail Notes

6.01 Architectural cast-in-place concrete wall. Re: Structural & Finish Schedule
6.02 New 6" CMU wall. Re: Structural
6.03 New prefinished metal parapet. Re: Finish Schedule
6.04 New thin-brick veneer & mortar bed. Re: Finish Schedule
6.05 2x4 wood stud
6.06 2x4 wood stud
6.06 5/8" Painted gyp. board on 2 1/2" Wood Stud
6.07 2x wood nailer
6.08 Wood beam/plate. Re: Structural
6.09 Vapor barrier
6.10 Hydro-applied membrane on walls as specified, apply below 36" AFF. Heavy Application with Re: Mfr's application/environmental conditions.
6.11 1" Z-furring channel mounted vertically at 16" o.c.
6.12 7/8" hat channel mounted horizontally at 16" o.c.
6.13 5/8" painted gyp board
6.14 1/2" Fiberglass Sheathing
6.15 R13 batt insulation
6.16 Prefinished metal sill/head flashing w/ 4" end laps
6.17 Prefinished metal downspout & gutter
6.18 Firestone HailGard Composite Board (R15 polyisocyanurate to 7.16" OSB) Fasteners per mfrs requirements.
6.19 3/4" OSB Roof Deck
6.20 35# Felt
6.21 Continuous slip of build-up
6.22 Hydro-applied & vapor barrier transition membrane at control & expansion joints. Heavy Elastomeric Transition Membrane
6.23 Standing seam metal roof, prefinished. Re: Site Plan for regrade
6.24 Pre-Engineered retrofit roof framing system, by others. Coordinate with locations of new mechanical and plumbing runs.
6.25 Architectural concrete wall. Re: Structural & Finish Schedule.
6.26 Scheduled window frame & glazing
6.27 Removable flood barrier. Re: G.030
6.28 Mfr. recommended fastener w/ neoprene gasket.
6.29 Prefinished metal coping to match wall panel
6.30 Joint sealant
6.31 Rod, stock & seal
6.32 Pre-finished jamb flashing. 4" end laps w. continuous caulk at lap.

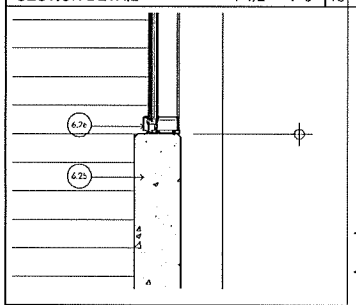

SECTION DETAIL 1 1/2" = 1'-0" 17

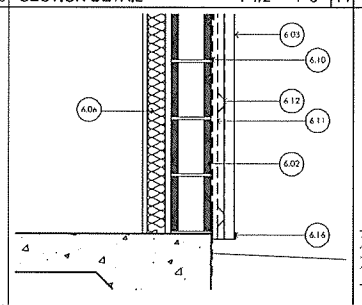

SECTION DETAIL 1 1/2" = 1'-0" 13

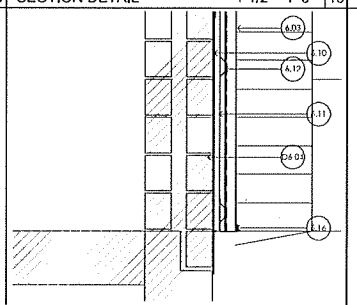

SECTION DETAIL 1 1/2" = 1'-0" 9

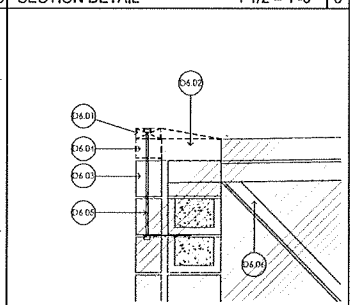

SECTION DETAIL 1 1/2" = 1'-0" 5

KEYED NOTES 1

RENOVATION FLOOR PLAN

RYDEN ARCHITECTURE
commercial | residential | planning
1252 thornton road
houston, texas 77018
713 206.6893 (v)
contact: greg ryden, aia

Consultant Engineers:

MEP Henderson Engineers
3535 Briarpark Drive, Suite 200
Houston, Texas 77042
Office: (713) 783-7707
Contact: David Darby, PE
Email: david.darby@hei-eng.com

Structural & Civil CSF Consulting Engineers
11301 Fallbrook Suite 320
Houston, Texas 77065
Office: (832) 678-2110
Contact: Carlos Gutierrez, PE
Email: carlos@csfengineers.com

City of Houston | HFD
Fire Station 13 Renovations and Addition
2215 W. 43rd Street | Houston, Texas 77018

Ownership of Instruments of Service
All reports, plans, specifications, computer files, field data, notes & other documents and instruments prepared by Ryden Architecture, LLC as instruments of service shall remain the property of Ryden Architecture, LLC. Ryden Architecture, LLC shall retain all common law, statutory and other reserved rights, including the copyright thereto.

Issue	
10.23.2014	Permit

Project No. 14005

Section & Plan Details

A.601

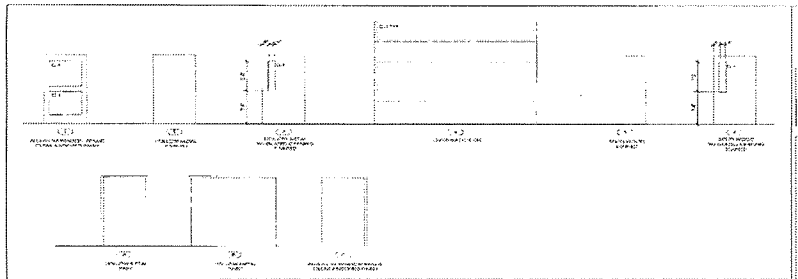

DOOR & FRAME TYPES 15

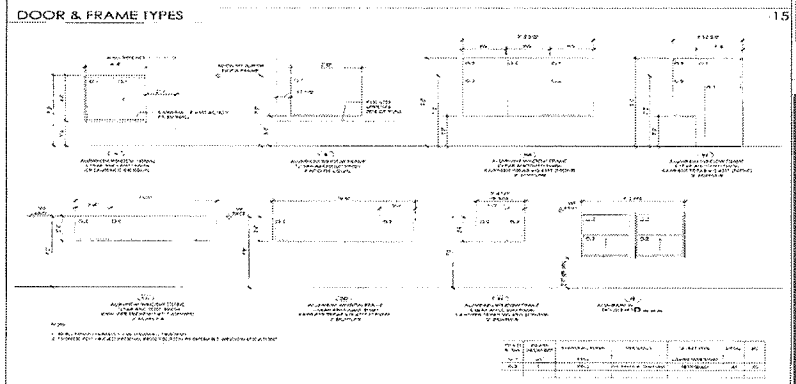

WINDOW OPENINGS 14

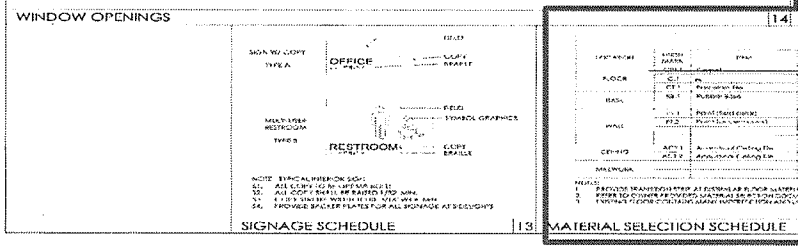

SIGNAGE SCHEDULE 13

DOOR & FRAME SCHEDULE

DOOR NO.	ROOM NAME	DOOR SIZE W	DOOR SIZE H	DOOR SIZE TH	DOOR TYPE	DOOR MATL	DOOR TH	FRAME TYPE	FRAME TYPE	FRAME MATL	FRAME TH	GLASS TYPE	GLASS AREA	SIGN TYPE	REMARKS
102	LOBBY	3'-0"	7'-0"	1 3/4"	1	AL	AL	[illegible]	[illegible]	AL	AL				
103	EVALUATION	3'-0"	7'-0"	1 3/4"	3	AL	AL	[illegible]	A	HM	PT		02		
103A	APPARATUS BAY	3'-0"	10'-4"	1 3/4"	3	AL	AL	2 HR RF OPENING							
103B	APPARATUS BAY	3'-0"	10'-4"	1 3/4"	3	AL	AL	2 HR RF OPENING							
103C	APPARATUS BAY	3'-0"	10'-4"	1 3/4"	3	AL	AL	2 HR RF OPENING							
103D	APPARATUS BAY	3'-0"	7'-0"	1 3/4"	2	HM	PT	[illegible]	A	HM	PT		02		
104	LOBBY	3'-0"	7'-0"	1 3/4"	3	HM	PT	[illegible]	A	HM	PT		02	A	
105	EVALUATION	3'-0"	7'-0"	1 1/2"	4	WD	STN	3-1 3/4" x 7'-1 3/4"	C	AL	AL		04	A	
106	HALLWAY	3'-0"	7'-0"	1 1/2"	5	WD	STN	3-1 3/4" x 7'-1 3/4"	C	AL	AL		04	A	
107	CORRIDOR	3'-0"	7'-0"	1 1/2"	5	WD	STN	3-1 3/4" x 7'-1 3/4"	C	AL	AL		05	A	
108	WORKING ROOM	3'-0"	7'-0"	1 1/2"	4	WD	STN	3-1 3/4" x 7'-1 3/4"	C	AL	AL		07	A	
108A	LOCKER ROOM	3'-0"	7'-0"	1 1/2"	4	WD	STN	3-1 3/4" x 7'-1 3/4"	C	AL	AL		07	A	
108B	LOCKER ROOM	3'-0"	7'-0"	1 1/2"	4	WD	STN	3-1 3/4" x 7'-1 3/4"	C	AL	AL		10	A	
109	SHOP	3'-0"	7'-0"	1 1/2"	4	WD	STN	3-1 3/4" x 7'-1 3/4"	C	AL	AL		10	B	
110	WOMEN	3'-0"	7'-0"	1 1/2"	4	WD	STN	3-1 3/4" x 7'-1 3/4"	C	AL	AL		10	B	
111	CAPTAIN	3'-0"	7'-0"	1 1/2"	4	WD	STN	3-1 3/4" x 7'-1 3/4"	C	AL	AL		10	A	
111A	CAPTAINS BEDROOM	3'-0"	7'-0"	1 1/2"	4	WD	STN	3-1 3/4" x 7'-1 3/4"	C	AL	AL		10	A	
112	DORMITORY	3'-0"	7'-0"	1 1/2"	4	WD	STN	3-1 3/4" x 7'-1 3/4"	C	AL	AL		10	A	
112A	STUDY	3'-0"	7'-0"	1 1/2"	4	WD	STN	3-1 3/4" x 7'-1 3/4"	C	AL	AL		10	A	
113	ELECTRICAL	3'-0"	7'-0"	1 1/2"	5	WD	STN	3-1 3/4" x 7'-1 3/4"	C	AL	AL		10	A	
113	CONSIGNED FOOD	3'-0"	7'-0"	1 1/2"	5	WD	STN	3-1 3/4" x 7'-1 3/4"	C	AL	AL		10	A	
114	LIVING/DINING	3'-0"	7'-0"	1 3/4"	5	HM	PT	[illegible]	B	HM	PT		03	A	
115	WATCH & DRAWING	3'-0"	7'-0"	1 3/4"	5	HM	PT	[illegible]	A	HM	PT		03	A	

GENERAL NOTES:
1. [illegible]
2. [illegible]
3. [illegible]

DOOR, FRAME AND HARDWARE SCHEDULE 7

ROOM FINISH SCHEDULE

ROOM NUMBER	ROOM NAME	FLOOR	BASE	WALLS N	WALLS E	WALLS W	WALLS S	CEILING	HGT. MATL	REMARKS
100	LOBBY	CT-1	RB-1	PT-1	PT-1	PT-1	PT-1	ACT-1		
101	EVALUATION	CT-1	RB-1	PT-1	PT-1	PT-1	PT-1	ACT-1	A	
102	HALLWAY	CT-1	RB-1	PT-1	PT-1	PT-1	PT-1	ACT-1	A	
103	LOCKER	CT-1	RB-1	PT-1	PT-1	PT-1	PT-1	ACT-1	A	
104	WORKING ROOM	CT-1	RB-1	PT-1	PT-1	PT-1	PT-1	ACT-1	A	
105	LOCKER ROOM	CT-1	RB-1	PT-1	PT-1	PT-1	PT-1	ACT-1	A	
106	SHOP	CT-1	CT-2	PT-1	PT-1	PT-1	PT-1	ACT-1	B	NOTES 2, 4
107	WOMEN	CT-1	CT-2	PT-1	PT-1	PT-1	PT-1	ACT-1	B	NOTES 2, 3
108	CAPTAIN	CT-1	RB-1	PT-1	PT-1	PT-1	PT-1	ACT-1	A	
108A	CAPTAINS BEDROOM	CT-1	CT-2	PT-1	PT-1	PT-1	PT-1	ACT-1	B	NOTES 2, 3
109	DORMITORY	CPT-1	RB-1	PT-1	PT-1	PT-1	PT-1	ACT-1	A	
110	STUDY	CPT-1	RB-1	PT-1	PT-1	PT-1	PT-1	ACT-1	A	
111	ELECTRICAL CLOSET	CT-1	RB-1	PT-1	PT-1	PT-1	PT-1	ACT-1	A	
112	PANTRY	CT-1	RB-1	PT-1	PT-1	PT-1	PT-1	ACT-1	A	
113	CONSIGNED FOOD	CT-1	RB-1	PT-1	PT-1	PT-1	PT-1	ACT-1	A	
114	LIVING/DINING	CT-1	RB-1	PT-1	PT-1	PT-1	PT-1	ACT-1		
115	WATCH & DRAWING	CT-1	RB-1	PT-1	PT-1	PT-1	PT-1	ACT-1	A	
116	APPARATUS BAY	EXIST				TB		ACT-1		NOTES 4

GENERAL NOTES:
1. AT AREAS OF DAMPED NEW WATER AND ADJACENT EXISTING WATERFILL PROVIDE A MATCHED FINISH OR AS DIRECTED BY OWNER
2. AT ALL ROOMS FLOOR, WALLS AND CEILING, BEFORE WATERFILL SLOTTED SUCH ROOM PROVIDE ENGINEERING WITH DUE
3. [illegible]
4. [illegible]

GENERAL NOTES:
A. [illegible]
B. [illegible]

ROOM FINISH SCHEDULE 6

MATERIAL SELECTION SCHEDULE

LOCATION	MESH MARK	PAN	MANUFACTURER	MANUFACTURER NAME	PRODUCT NUMBER	FINISH	NOTES
FLOOR	CT-1	[illegible]	TBD	To Be Determined	TBD		Or as to be Selected by Architect
	CT-1	[illegible]	TBD	To Be Determined	TBD		Or as to be Selected by Architect
BASE	RB-1	[illegible]	[illegible]	[illegible]	[illegible]	[illegible]	Or as to be Selected by Architect
	CT-1	[illegible]	TBD	To Be Determined	TBD		Or as to be Selected by Architect
WALL	PT-1	[illegible]	TBD	To Be Determined	TBD		Or as to be Selected by Architect
CEILING	ACT-1	[illegible]	[illegible]	[illegible]	[illegible]	[illegible]	[illegible]
	ACT-2	[illegible]	[illegible]	[illegible]	[illegible]	[illegible]	[illegible]
MILLWORK							

NOTES:
1. PROVIDE TRANSITION STRIP AT DISSIMILAR FLOOR MATERIALS AS REQUIRED
2. REFER TO OWNER PROVIDED MATERIALS SELECTION DOCUMENT
3. [illegible]

MATERIAL SELECTION SCHEDULE 5

HARDWARE SCHEDULE 1

RYDEN ARCHITECTURE
commercial | residential | planning
1252 thornton road
Houston, Texas 77018
713 206 6823 (v)
contact: greg.ryden, aia

Consultant Engineers:

MEP: Henderson Engineers
3535 Briarpark Drive, Suite 200
Houston, Texas 77042
Office: (713) 783-7707
Contact: David Darby, PE
Email: david.darby@heileng.com

Structural & Civil: CSE Consulting Engineers
11301 Fallbrook Suite 320
Houston, Texas 77065
Office: (832) 678-2110
Contact: Carlos Gutierrez, PE
Email: carlos@csfengineers.com

City of Houston | HFD
Fire Station 13 Renovations and Addition
2215 W. 43rd Street | Houston, Texas 77018

Ownership of Instruments of Service
All reports, plans, specifications, computer files, field data, notes and other documents and instruments prepared by Ryden Architecture, LLC, as instruments of service, shall remain the property of Ryden Architecture, LLC. Ryden Architecture, LLC shall retain all common law, statutory and other reserved rights, including the copyright thereto.

Issue: 10.23.2014 Permit

Project No. 14020

Project Schedules

A.820

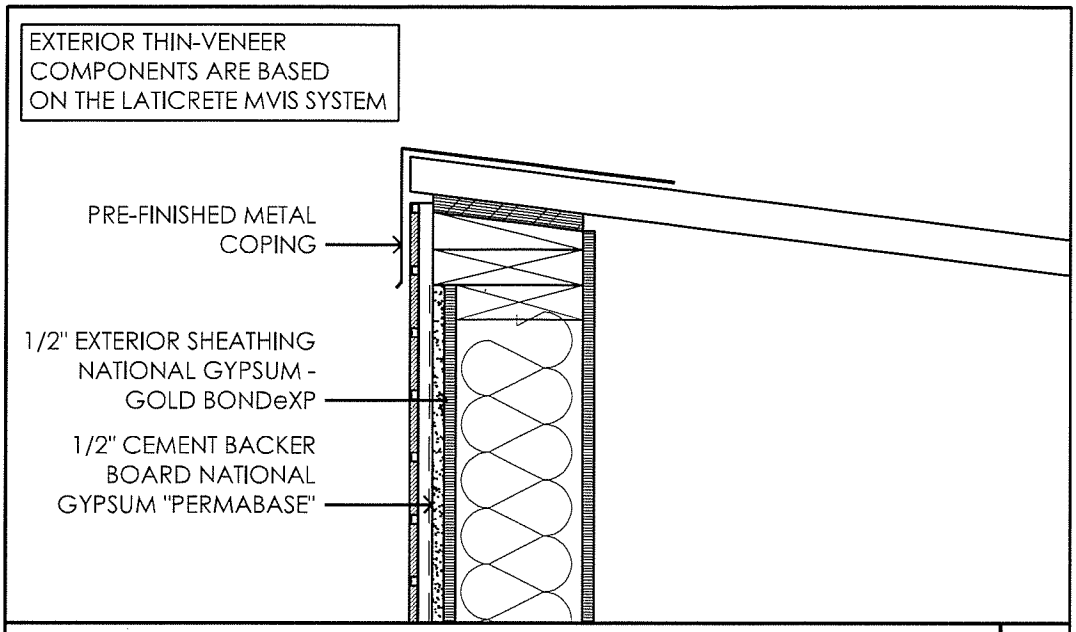

SECTION DETAIL 1 1/2" = 1'-0" 7

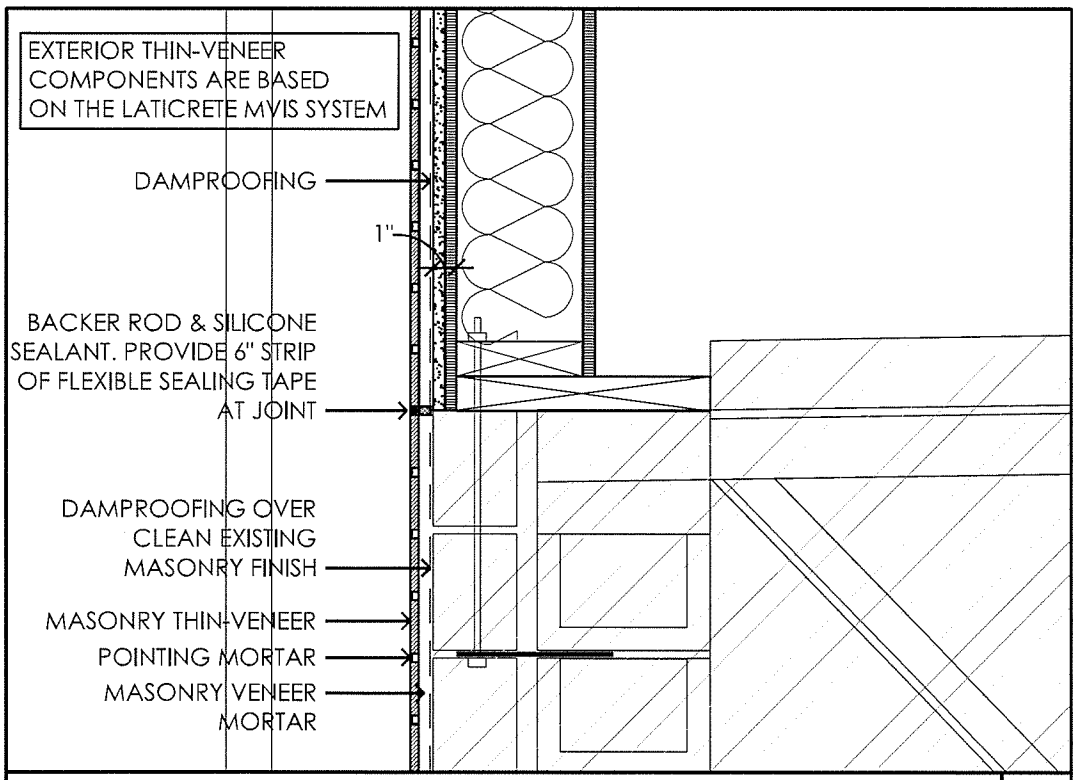

SECTION DETAIL 1 1/2" = 1'-0" 6

RYDEN ARCHITECTURE
architecture | planning

1252 thornton road | houston, texas 77018
713.206.6893 (v)
contact: greg ryden, aia

Project Name:
Fire Station 13

Scale: 1 1/2"=1'-0"

Sheet Number: ASk.01

Drawing Title:
Wall Detail @ Apparatus Bay

Reference: 6 & 7/A.601

Date: 03.12.2015

Project No: 14005

EXTERIOR BRICK VENEER & DAMP PROOFING PLAN

LEGEND
(SEE ALSO "SCOPE OF WORK")

1. BRICK VENEER LOCATIONS
2. FOR REFERENCE ONLY: "FLOOD PROOFING" TO 36" MIN. ABOVE GRADE AS SPECIFIED ON PLANS – ***BY OTHERS***
3. INDICATES "DAMP PROOFING " BY THE BRICK VENEER INSTALLER USING THE LATICRETE PRODUCTS

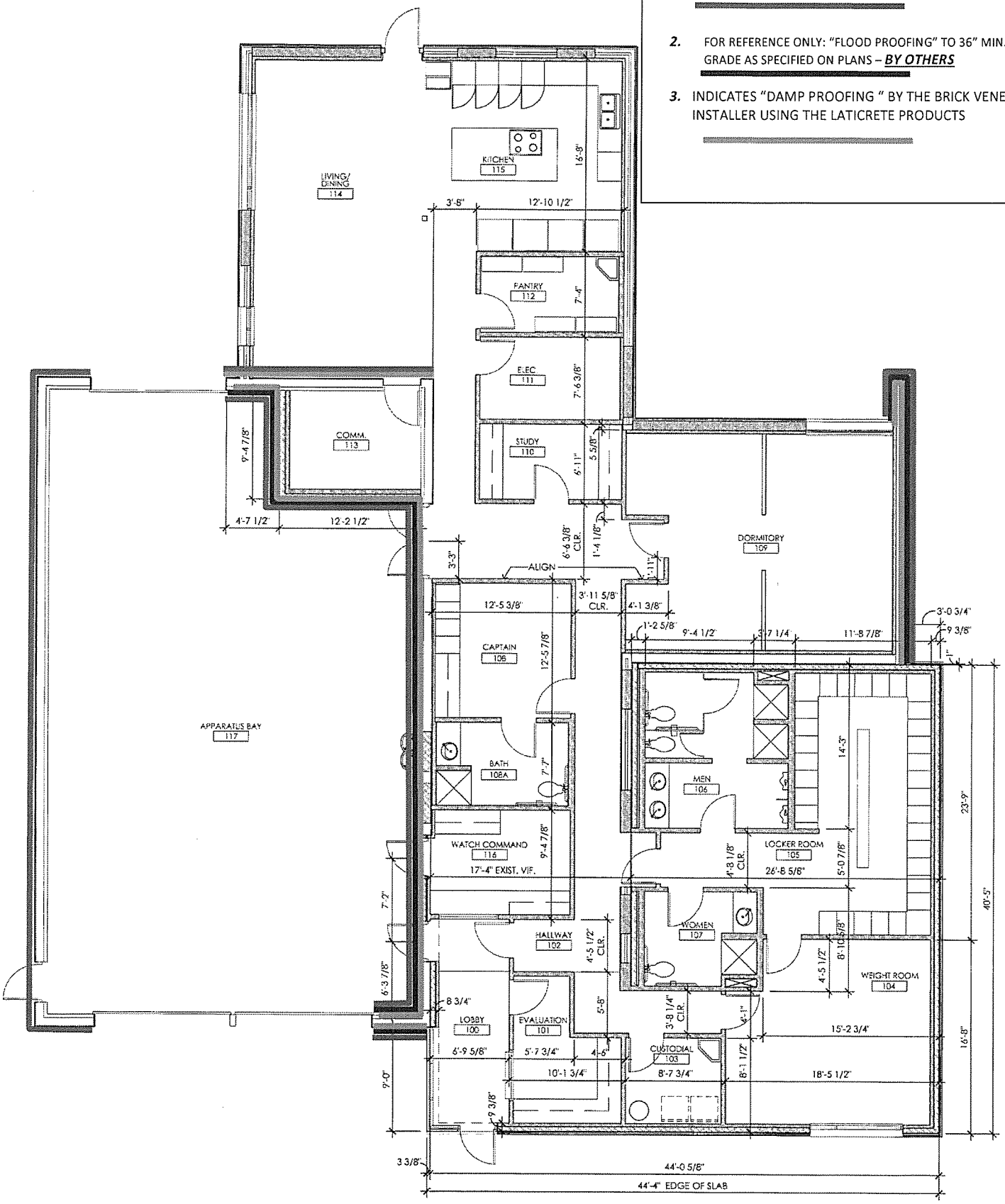

INTERIOR FLOOR AND WALL TILE PLAN

LEGEND

(SEE ALSO "SCOPE OF WORK")

1. **FLOOR TILE:** Daltile "Colorbody" Porcelain Continental Slate series, COLOR: Tuscan Blue CS56 different tile sizes 18 by 18, 12 by 18, 12 by 12, and 6 by 6. Grout will be Tex Rite #32 Gray or equivalent. 3/16 grout lines shall be maintained on all floor tile.

2. **SHOWER FLOOR TILE:** Daltile "Colorbody" Porcelain Continental Slate series, COLOR: Tuscan Blue CS56 and **6 by 6 ONLY**. Grout will be Tex Rite #32 Gray or equivalent. 3/16 grout lines shall be maintained on all floor tile.

3. **BATHROOM & SHOWER WALL TILE**: Daltile "Colorbody" Porcelain Continental Slate series, Egyptian Beige CS50 color, sizes 6 by 6. Wall tile to be installed in a brick pattern. Grout will be Tex Rite #49 Antique White or equivalent and 3/16 width. There will be a 4" horizontal decorative accent border of Daltile "colorbody" Porcelain, Continental Slate series, CS74 pattern. Border will be approximately 4 feet above floor, but below the light switches.
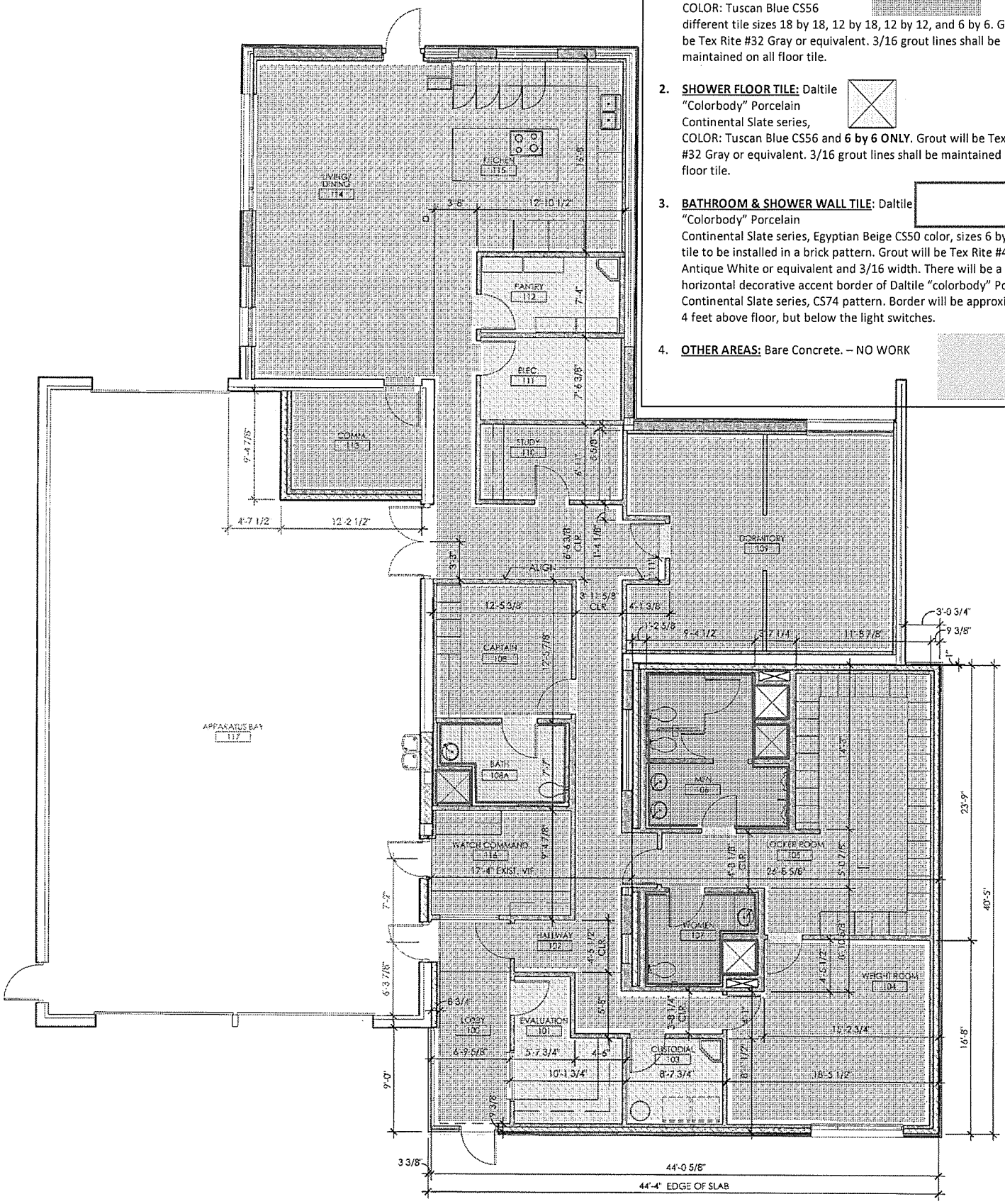
4. **OTHER AREAS:** Bare Concrete. – NO WORK