CITY OF HOUSTON
SCOPE OF WORK
FOR
INSALLATION OF STAINLESS STEEL COUNTERTOPS
FOR
GENARAL SERVICES DEPARTMENT

It is the intent of the City of Houston to solicit the lowest and best responsible bid or price under competitive conditions.

Hire Houston First

Designation as a City Business or Local Business

To be designated as a City or Local Business for the purposes of the Hire Houston First Program, as set out in Article XI of Chapter 15 of the Houston City Code, a bidder or proposer must submit the Hire Houston First Application and Affidavit ("HHF Affidavit") to the Director of the Mayor's Office of Business Opportunities and receive notice that the submission has been approved prior to award of a contract. Bidders are encouraged to secure a designation prior to submission of a bid or proposal if at all possible.

Download the HHF Affidavit from the Office of Business Opportunities Webpage at the City of Houston e-Government Website at the following location:

www.houstontx.gov/obo/moreforms/hirehoustonfirstaffidavit.pdf

Award of Procurement of $100,000 or More for Purchase of Non-Professional Services, Including Construction Services:

THE CITY WILL AWARD THIS PROCUREMENT TO A " CITY BUSINESS," AS THAT TERM IS DEFINED IN SECTION 15-176 OF THE CITY OF HOUSTON CODE OF ORDINANCES ("THE CODE"):

- IF THE BID OF THE LOCAL BUSINESS IS THE LOWEST RESPONSIBLE BID OR IS WITHIN 3% OF THE LOWEST BID RECEIVED, AND
- UNLESS THE USER DEPARTMENT DETERMINES THAT SUCH AN AWARD WOULD UNDULY INTERFERE WITH CONTRACT NEEDS, AS PROVIDED IN SECTION 15-181 OF THE CODE.

IF THERE IS NO BID OF A LOCAL BUSINESS THAT MEETS THESE CRITERIA, THE CITY WILL AWARD THE PROCUREMENT TO THE LOWEST RESPONSIBLE BIDDER.

Award of Procurement under $100,000 Purchase of Non-Professional Services Including Construction Services:

THE CITY WILL AWARD THIS PROCUREMENT TO A "LOCAL BUSINESS," AS THAT TERM IS DEFINED IN SECTION 15-176 OF THE CITY OF HOUSTON CODE OF ORDINANCES ("THE CODE"):

- IF THE BID OF THE CITY BUSINESS IS THE LOWEST RESPONSIBLE BID OR IS WITHIN 5% OF THE LOWEST BID RECEIVED, AND
- UNLESS THE USER DEPARTMENT DETERMINES THAT SUCH AN AWARD WOULD UNDULY INTERFERE WITH CONTRACT NEEDS, AS PROVIDED N SECTION 15-181 OF THE CODE.

IF THERE IS NO BID OF A LOCAL BUSINESS THAT MEETS THESE CRITERIA, THE CITY

WILL AWARD THE PROCUREMENT TO THE LOWEST RESPONSIBLE BIDDER.

Award of Procurement that may be More or Less than $100,000 for Purchase of Non-Professional Services, Including Construction Services:

THE CITY WILL AWARD THIS PROCUREMENT TO A " LOCAL BUSINESS," AS THAT TERM IS DEFINED IN SECTION 15-176 OF THE CITY OF HOUSTON CODE OF ORDINANCES ("THE CODE"):

- IF THE BID OF THE LOCAL BUSINESS IS LESS THAN $100,000 AND IS THE LOWEST RESPONSIBLE BID OR IS WITHIN 5% OF THE LOWEST BID RECEIVED, OR
- IF THE BID OF THE LOCAL BUSINESS IS MORE THAN $100,000 AND IS THE LOWEST RESPONSIBLE BID OR IS WITHIN 3% OF THE LOWEST BID RECEIVED, AND
- UNLESS THE USER DEPARTMENT DETERMINES THAT SUCH AN AWARD WOULD UNDULY INTERFERE WITH CONTRACT NEEDS, AS PROVIDED IN SECTION 15-181 OF THE CODE.

IF THERE IS NO BID OF A LOCAL BUSINESS THAT MEETS THESE CRITERIA, THE CITY WILL AWARD THE PROCUREMENT TO THE LOWEST RESPONSIBLE BIDDER.

The following are the minimum acceptable specifications:

1.0 SCOPE OF WORK:

Work under this contract shall include the furnishing of all labor, tools, supplies, materials, transportation, supervision, and necessary insurance for "**BUILD AND DELIVER PORTABLE BIULDINGS**"

1.1 Contractor will provide 14 gauge stainless steel kitchen countertops as per the attached plans.

1.2 Included are two (2) kitchen sink bowls will be 18" wide x16" front to back x12" deep. Each sink will a drain hole for standard type basket/strainer. Provide a raised platform located as shown on the drawing for a three (3) hole faucet deck to mount on. Platform will be 1/2" x 3" wide x 12" long and fully welded integral with countertop. The platform is designed to help prevent water from seeping through under the faucet deck and into cabinet below. The platform must be centered evenly whether used for double sink or single sink. Provide three (3) one inch diameter hole for a standard type faucet. See plans for location of platform.

1.3 For countertops against wall or end of cabinet include a standard ¾ x 4" backsplash. Also include stainless steel panels from top of 4" splash to bottom of upper wall cabinets. Provide cut outs where needed in wall panels for electrical receptacles. Space between countertop and upper wall cabinets is approximately 21".Contractor is advised to field verify this dimension. Cap edges with a finish trim where needed.

1.4 Countertop with sink will have a minimal slope designed so water will flow towards sink drain into it.

1.5 All finish edges of countertops will have a standard "marine" type finish edge.

1.6 All necessary butt joints must have a polished welded seam. No joints shall be visible.

1.7 The finish will be factory milled finish.

1.8 Contractor will furnish and attach a ¾ bc plywood substrate for stinless steel to mount on.

1.9 Working hours at job site will be from 6:00 am to 2:30 pm, Monday through Friday. Different times will be considered but must be approved and prearranged with City of Houston GSD job site Supervisor.

1.10 The contractor shall complete all specified work within twenty one (21) calender days

from the date Purchased Order is issued by the city.

1.11 Protect surrounding work from damage or disfiguration.

1.12 If on site fabrication is needed, accommodations will be made to allow room for contractor to temporarily set up a table or other means of supporting work for that purpose.

1.13 The contractor is responsible for maintaining a clean work area at all times during installation and clean up after installation.

1.14 Contractor is responsible for verification of all dimensions.

1.15 All site visits and work are to be coordinated with City of Houston GSD representative Ken Mersiovsky (713-859-3261. If unavailable,call Johnny Stanley at (713-412-1787)

Contact: Johnny Stanley
General Services Department
713-412-1787

2.0 MATERIALS:

2.1 Materials meets or exceeds the standard in the industry for improvement of the Services to be performed and conforms with respects to the specifications.

3.0 QUALITY ASSURANCE:

3.1 Should any material be found defective, not meeting specifications, or that which has not been approved in writing by the owner shall, upon discovery (including any time within the period of the guarantee), be replaced with the specified equipment or material at no additional cost to the City.

4.0 WARRANTY:

4.1 The Contractor shall guarantee all of the work that is performed under this .contract, including all materials, workmanship, for a minimum of one (1) year from the date of full acceptance of the work.

5.0 DISCREPANCIES:

5.1 If there are discrepancies in the specifications, the Contractor shall ask for a clarification from the City prior to bid opening.

5.2 If no clarification is requested, the City's judgement shall rule.

6.0 INSURANCE:

6.1 Contractor must comply with the City of Houston insurance requirements; provide insurance certificate, insurance endorsements, and drug policy forms within three (3) days of request.

7.0 WORKMANSHIP:

7.1 All work shall be performed and completed in a thorough, workmanlike manner and in

accordance with the latest proven practices of the trade by thoroughly skilled and experienced workmen.

8.0 PERMITS:

8.1 Unless specifications state otherwise successful Contractor shall be responsible for securing any and all permits for proposed work. Any fee charged for these permits shall be the responsibility of the Contractor and not the City of Houston.

9.0 SITE VISIT:

9.1 All prospective bidders are encouraged to arrange and attend a site visit to clarify the actual scope of work to be done. Failure of a bidder to arrange and attend a site visit shall not constitute grounds for later claim against the City.

9.2 The successful bidder's product shall be supported by an authorized service facility for securing replacement material without undue delay.

9.3 Any revisions to be incorporated into this solicitation document arising from discussions before, during and subsequent to the site visit conference will be confirmed in writing by Letter(s) of Clarification prior to the bid due date. Verbal responses will not otherwise alter the specifications, terms and conditions as stated herein.

10.0 TERMINATION OF AGREEMENT:

10.1 This Contract may be terminated by the City Purchasing Agent upon thirty (30) days notice in writing, if the materials and/or services furnished do not conform to the standard set forth herein; or if the deliveries and servicing of this Contract do not conform to the requirements detailed herein.

11.0 CONTRACT COMPLETION:

11.1 The Contractor shall complete this contract within thirty (30) calendar days from date given notice to proceed. All work is to be performed during normal business hours.

12.0 CLEAN-UP:

12.1 Unless specifications state otherwise at the completion of all work, Contractor shall remove from the area all trash, rubbish, and debris caused by its operations, leaving the job site clean.

13.0 PRODUCT LITERATURE/SPECIFICATION SHEETS:

13.1 To evaluate bids, the user department and the City purchasing staff may require product literature/specification sheets. When required, the bidders(s) should submit the requested product literature/specification sheets within five (5) calendar days from date of request. **FAILURE ON BIDDER'S PART TO FURNISH THE REQUESTED TECHNICAL DATA IN THE TIME LIMIT GIVEN ABOVE MAY BE CAUSE FOR REJECTION OF THE BID.**

14.0 NO CONTACT PERIOD:

14.1 Neither bidder(s) nor any person acting on bidder(s)'s behalf shall attempt to influence the outcome of the award by the offer, presentation or promise of gratuities, favors, or anything of value to any appointed or elected official or employee of the City of Houston, their families or staff members. All inquiries regarding the solicitation are to be directed to the designated City Representative identified on the first page of the solicitation. Upon issuance of the solicitation through the pre-award phase and up to the date the City Secretary publicly posts notice of any City Council agenda containing the applicable award, aside from bidder's formal response to the solicitation, through the pre-award phase, written requests for clarification during the period officially designated for such purpose by the City Representative, neither bidder(s) nor persons acting on their behalf shall communicate with any appointed or elected official or employee of the City of Houston, their families or staff through written or oral means in an attempt to persuade or influence the outcome of the award or to obtain or deliver information intended to or which could reasonably result in an advantage to any bidder. However, nothing in this paragraph shall prevent a bidder from making public statements to the City Council convened for a regularly scheduled session after the official selection has been made and placed on the City Council agenda for action, or to a City Council committee convened to discuss a recommendation regarding the solicitation.

C of H, GDS, In-House Renovations
1205 Dart
Cabinet Shop
Your Company Phone

[01-04-16]
Room 1

Not To Scale

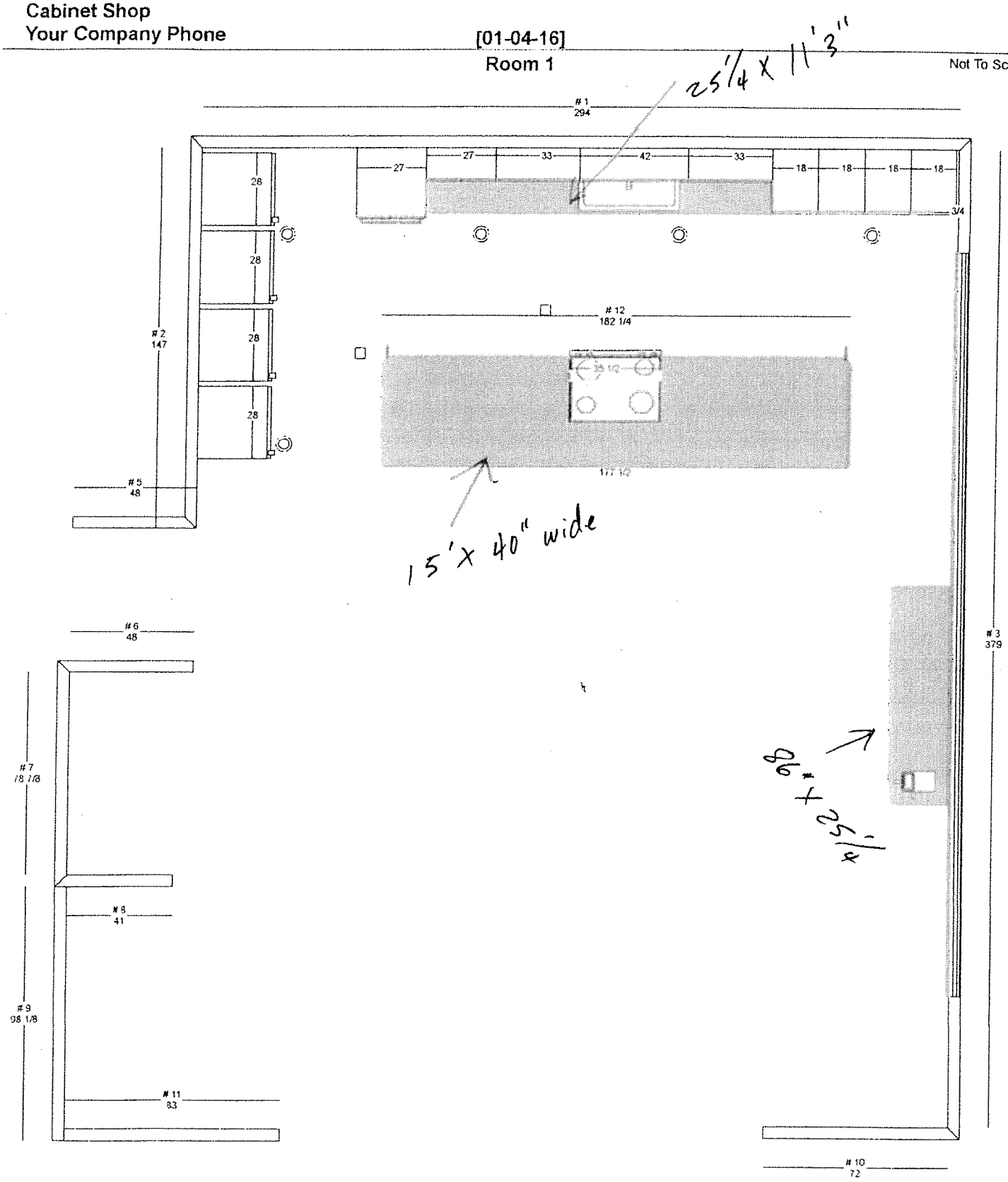

C of H, GDS, In-House Renovations
1205 Dart
Cabinet Shop
Your Company Phone

[01-04-16]

Room 1 - Wall 1

Not To Scale

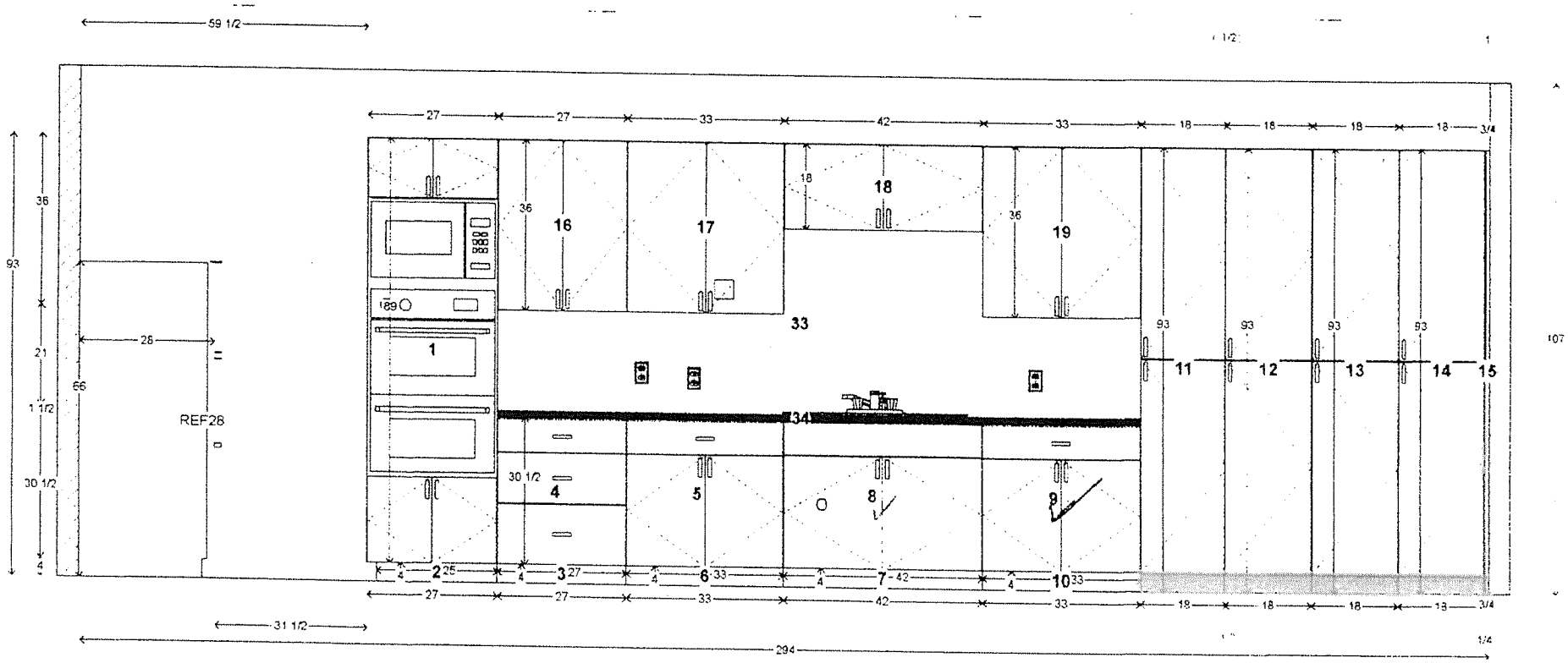

C of H, GDS, In-House Renovations
1205 Dart
Cabinet Shop
Your Company Phone

[01-04-16]

Room 1 - Wall 3

Not To Scale

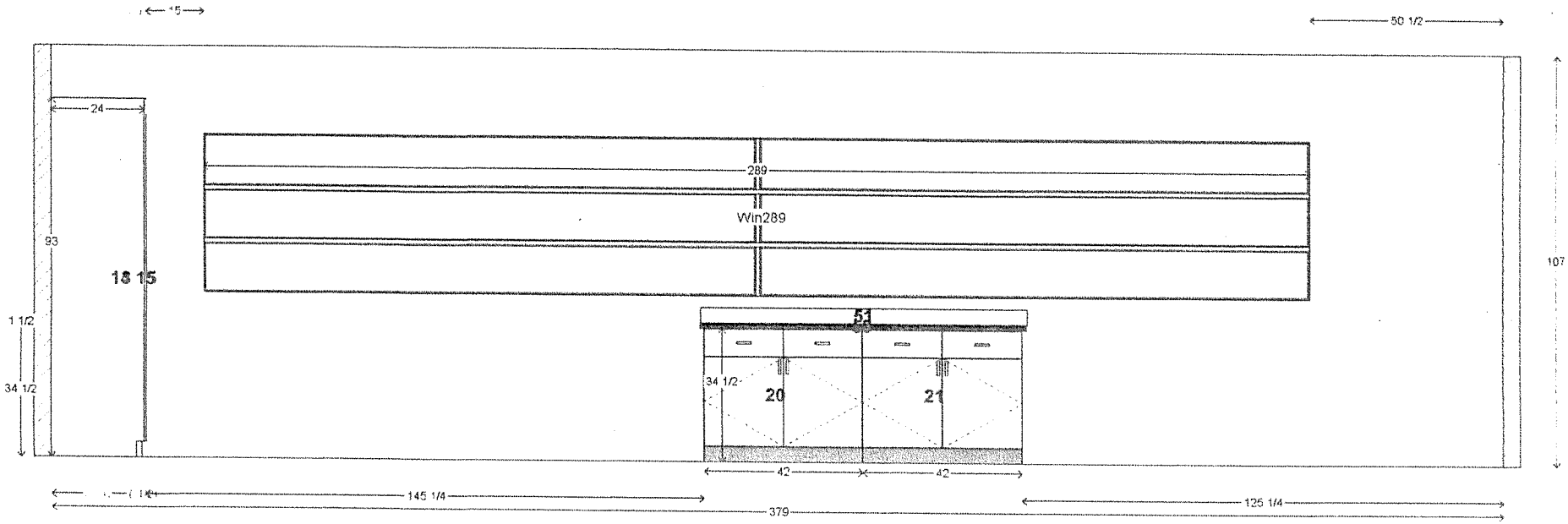

C of H, GDS, In-House Renovations
1205 Dart
Cabinet Shop
Your Company Phone

[01-04-16]

Room 1 - Wall 4

Not To Scale

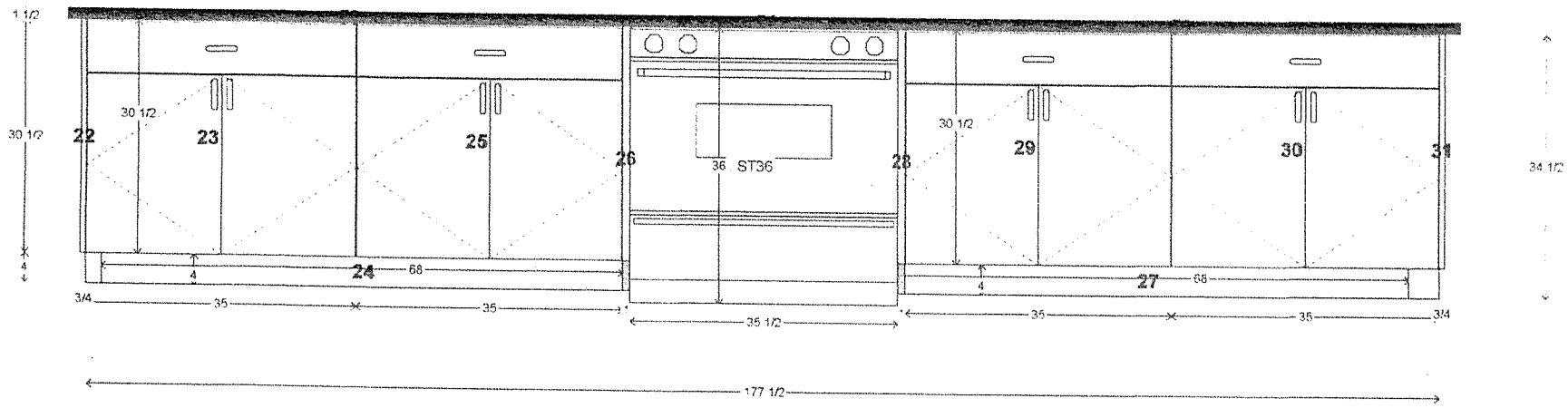

C of H, GDS, In-House Renovations
1205 Dart
Cabinet Shop
Your Company Phone

[01-04-16]

Room 1 - Wall 2
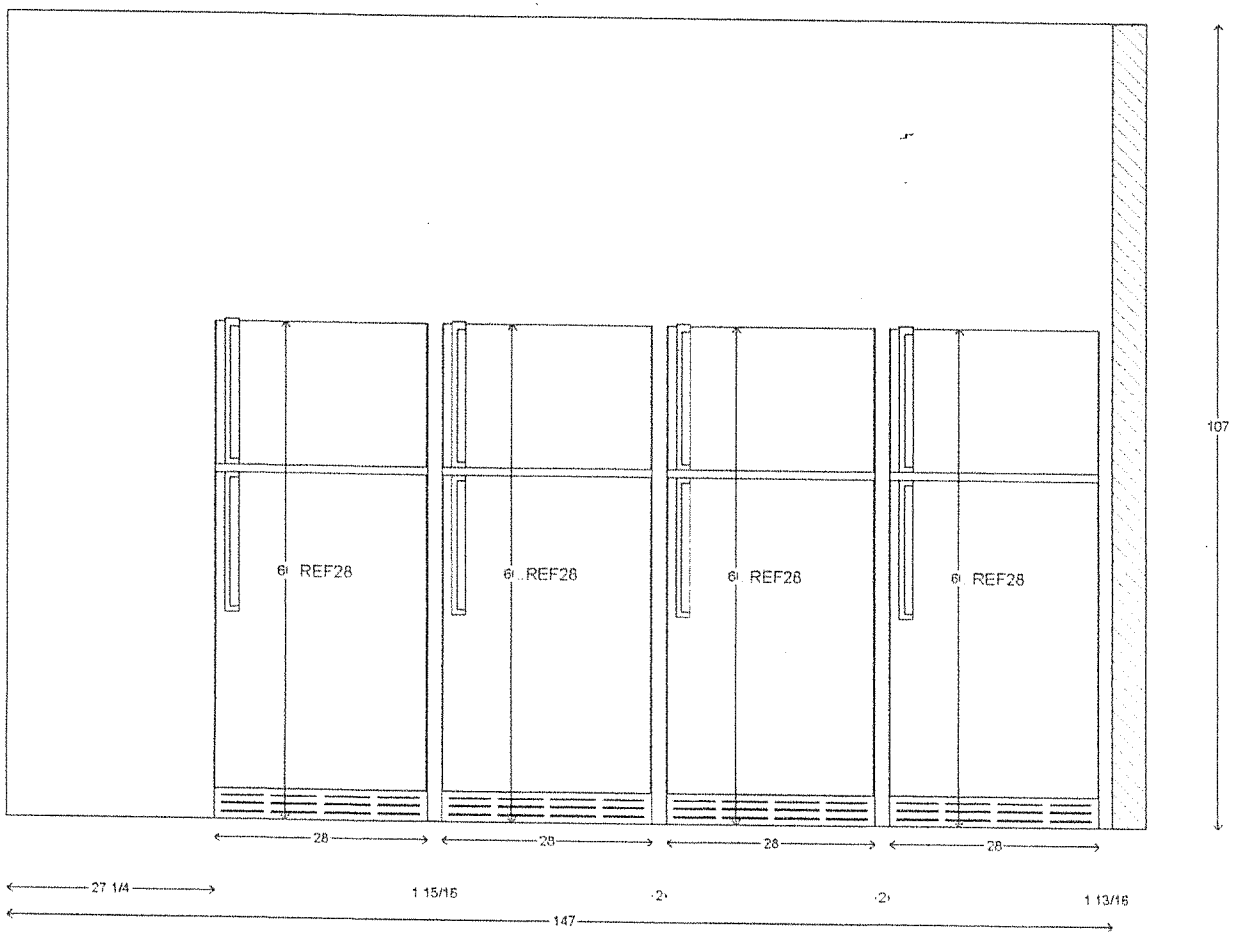
Not To Scale