CITY OF HOUSTON
INVITATION TO BID
Issued: November 19, 2010

Bid Opening:
Sealed bids, in duplicate, will be received by the City Secretary of the City of Houston, in the City Hall Annex, Public Level, 900 Bagby, Houston, Texas 77002, until 10:30 a.m. Thursday, **December 9, 2010** and all bids will be opened and publicly read in the City Council Chamber, City Hall Annex, Public Level, 900 Bagby at 11:00 a.m. on that date for the purchase of:

VALVE INSERTIONS
FOR THE PUBLIC WORKS & ENGINEERING DEPARTMENT
BID INVITATION No. S50-N23815
NIGP CODE – 815-81 / 998-79

Buyer:
Questions regarding this solicitation package should be addressed to **Art Lopez at 832-393-8731,** or e-mail to **arturo.lopez@houstontx.gov.**

Bidding forms, specifications, and all necessary information should be downloaded from the Internet at http://purchasing.houstontx.gov. By registering and downloading this solicitation document, all updates to this solicitation document will be automatically forwarded via e-mail to all registered bidders. This information may also be obtained from the Supplier Assistance Desk, Strategic Purchasing Division, 901 Bagby, Concourse Level, Houston, Texas 77002.

Electronic Bidding:
In order to submit a bid for the items associated with this procurement, you must fill in the pricing information on the **"PLACE BID"** page.

Pre-Bid Conference:
A Pre-Bid Conference will be held for all Prospective Bidders in the Strategic Purchasing Division, **Conference Room No.1, City Hall, 901 Bagby, at 2:00 PM, on Wednesday, December 1, 2010**

All Prospective Bidders are urged to be present. It is the bidder's responsibility to ensure they have secured and thoroughly reviewed the solicitation documents prior to the Pre-Bid Conference. Any revisions to be incorporated into this solicitation document arising from discussions before, during and subsequent to the Pre-Bid Conference will be confirmed in writing by Letter(s) of Clarification prior to the bid due date. Verbal responses will not otherwise alter the specifications, terms and conditions as stated herein.

The place of the bid opening may be transferred in accordance with Paragraph (b), (5) of Section 15-3 of the Code of Ordinances, Houston, Texas. The bid opening meeting may be rescheduled in accordance with Paragraph (b), (6) of said Section 15-3.

The City reserves the right to reject any or all bids or to accept any bid or combination of bids deemed advantageous to it.

City Employees are prohibited from bidding on this solicitation in accordance with the Code of Ordinances, Section 15 - 1.

*CONTENTS:

SECTION A: OFFER
SECTION B: SCOPE OF WORK/SPECIFICATIONS
SECTION C: GENERAL TERMS & CONDITIONS

***NOTE 1: Actual page numbers for each Section may change when the solicitation document is downloaded from the Internet or because of Letters of Clarification. Therefore, Bidders must read the bid document in its entirety and comply with all the requirements set forth therein.**

***NOTE 2: To be considered for award, please submit the electronic bid form and the forms listed in Section A, including the official signature page, which must be signed by a company official authorized to bind the company.**

SECTION A
OFFICIAL BID FORM

FORMAL ONE-TIME BID

VALVE INSERTIONS
FOR THE PUBLIC WORKS & ENGINEERING DEPARTMENT
BID INVITATION No. S50-N23815
NIGP – 815-81 / 998-79

To The Honorable Mayor
and City Council Members
of the City of Houston, Texas (the "City"):

The undersigned hereby offers to **Furnish and Deliver Valve Insertions for the Utility Maintenance Facility for the Public Works and Engineering Department, located at 7101 Renwick, Houston, TX,** Prepaid F.O.B. destination point Houston, Texas, the item(s) listed on the **electronic bid form** and on individual Purchase Orders, in accordance with the price(s) bid and other conditions shown herein, and in accordance with the City's Specifications and General Terms & Conditions and/or samples/drawings provided herein. When issued by the City of Houston, Letters of Clarification shall automatically become part of this bid document and shall supersede any previous specifications or provisions in conflict with Letters of Clarification. It is the responsibility of the bidder to ensure that it has obtained all such letters. By submitting a bid on this project, bidder shall be deemed to have received all Letters of Clarification and to have incorporated them into the bid.

The City may accept this bid offer by issuance of a Notice of Award Letter and/or a Purchase Order at any time on or before the 120th day following the day this Official Bid Form is opened by the City. This offer shall be irrevocable for 120 days after bid opening or for 90 days after City Council awards the bid, whichever comes last, but this period may be extended by written agreement of the parties.

The City reserves the right to INCREASE quantities during the twelve-month (12) period following the issuance of the first purchase order subject to agreement in writing by the Contractor to honor the same bid price.

The City reserves the option, after bids are opened, to adjust the quantities listed on the electronic bid form upward or downward, subject to the availability of funds, and/or make award (s) on a line item basis.

SECTION A

Documents/forms must be downloaded from the City's Website:

https://purchasing.houstontx.gov

http://purchasing.houstontx.gov/solicitation_forms.htm

Additional Required Forms to be Included with this Bid:

In addition to the electronic Bid Form and the Official Signature Page, the Forms listed in Table 1 **must be completed and submitted to the Office of the City Secretary on or before the date and time the bid is due:**

Table 1 – Required Forms
Affidavit of Ownership
Fair Campaign Ordinance
Statement of Residency
Conflict of Interest Questionnaire

Table 2 lists other documents and forms that should be viewed/downloaded from the City's website, but are not required to be submitted with the bid. **The City will request these forms, as applicable, to be completed and submitted to the City by the recommended/successful bidder**:

Table 2 – Documents and Forms
Drug Forms
Sample Insurance Over $50,000.00
Formal Instructions for Bid Terms
EEOC

CONTRACTOR/SUPPLIER REFERENCES

In order to receive bid award consideration, the bidder must be able to demonstrate that it has provided, as a prime Contractor, products or services that are similar to those offered on the electronic bid form to governmental agencies or other entities of similar size/scope. The references should be listed in the space provided below. Please attach additional pages as necessary. If references are not included with the bid, the bidder shall be required to provide such references to the City of Houston within five working days from receipt of a written request from the City of Houston to do so. **Bidder's capability and experience shall be a factor in determining the Contractor's responsibility.** The City of Houston reserves the right to determine if such products or services are appropriately similar to those offered.

1. Entity Name: _____

   Address: _____

   City & State: _____

   Name & Phone Number of Contact: _____

2. Entity Name: _____

   Address: _____

   City & State: _____

   Name & Phone Number of Contact: _____

3. Entity Name: _____

   Address: _____

   City & State: _____

   Name & Phone Number of Contact: _____

4. Entity Name: _____

   Address: _____

   City & State: _____

   Name & Phone Number of Contact: _____

5. Entity Name: _____

   Address: _____

   City & State: _____

   Name & Phone Number of Contact: _____

SECTION B
GENERAL SPECIFICATIONS

1.0 BIDDING AND AWARD:

1.1 The City may accept this bid offer by issuance of a Notice of Award Letter and/or a Purchase Order at any time on or before the 120th day following the day the Official Bid Form is opened by the City. This offer shall be irrevocable for 120 days after bid opening or for 90 days after City Council awards the bid, whichever comes last, but this period may be extended by written agreement of the parties.

1.2 Prices bid shall remain firm through delivery and shall not be subject to increases (or supplemented on the Contractor's invoice(s) for payment).

1.3 The City reserves the option to adjust the quantities listed on the City's Official Bid Form upward or downward, subject to the availability of funds, and/or make award on a line item basis. Therefore, the City shall not be liable for any contractual agreements/obligations the Bidder enters into based on the City purchasing all the quantities specified herein.

1.4 The City reserves the right to INCREASE quantities during the twelve-month period following the issuance of the first purchase order subject to agreement in writing by the Contractor to honor its original unit bid price.

2.0 APPLICABLE SPECIFICATIONS:

2.1 "Notice to Bidders", the "Official Bid Forms", the "General Specifications", the "Technical Specifications", the "General Terms and Conditions" and other specifications that may be included herewith and the purchase orders which refer to these specifications.

3.0 TECHNICAL LITERATURE:

3.1 To evaluate the bids, the user department and the City purchasing staff may require product literature/specification sheets. Technical literature may be provided with the bid submittal but is not required. However, the City reserves the right to request literature or clarifications, as needed, after bid submittal.

3.2 If required, the Bidder must submit a minimum of TWO SETS of the requested catalogue information, descriptive literature specifications and/or (if applicable) engineering drawings that completely identify the items bid. Bidder(s) shall furnish the requested literature within seven (7) calendar days after the receipt of the City's written request. FAILURE ON BIDDER'S PART TO FURNISH THE REQUESTED TECHNICAL DATA IN THE TIME LIMIT GIVEN MAY BE CAUSE FOR REJECTION OF THE BID.

4.0 WARRANTY:

4.1 A minimum ***two-year*** warranty on both materials and workmanship shall be provided. The warranty period shall commence the date the City officially accepts the completed item(s). When extended warranties are available as standard, they shall be included as a part of the bid for the benefit of the City. Any and all documents necessary to effect warranty shall be properly applied for and submitted by the Bidder.

4.2 Additional warranties required are listed in the Technical Specifications for each item.

4.3 With respect to any goods, materials, equipment, supplies and parts furnished by it, the Contractor warrants:

- That all items are new and free of defects in title, design, material and workmanship.
- That each item meets or exceeds the manufacturer's specifications and requirements for the equipment structure, or other improvement in which the item is installed and conforms in all respects to the terms of the City Purchase Order and Specifications.
- That each replacement item is new, in accordance with original equipment
- Manufacturer's specifications are of a quality of at least as good as the quality of the item that it replaces (when the replaced item was new).
- That no item or its use infringes any patent, copyright or proprietary right.

4.4 The Contractor's product shall be supported by an authorized service facility that can provide warranty repair, service and maintenance work within 24 hours from notification by the City.

4.5 Any warranty work shall be completed without cost to the City. The Contractor shall be responsible for all shipping and/or freight expense from the City's designated location to the Contractor's facility for all warranty repair and/or maintenance and return to the City's designated location.

5.0 DELIVERY/INSPECTION:

5.1 The item(s) specified above, with delivery tickets and/or other required documents shall be delivered FOB Destination, to the location(s) shown on the purchase order(s) **within the delivery time(s) as listed in the Technical Specifications** after receipt of City of Houston Purchase Order.

5.2 The Contractor shall notify the City contact listed in the "Ship To" section of the purchase order not less than three (3) days prior to expected delivery/arrival to permit inspection scheduling. The City's contact shall advise the Contractor as to the date, time and location of authorized delivery/location. An authorized representative of the Contractor shall supervise delivery to the City. The City will not assume any liability for equipment delivered to an unauthorized location.

5.3 Documentation at time of Delivery:

The Contractor shall provide the following documentation **per purchase order** upon delivery:

- Copy of purchase order(s) and original invoice(s).
- Warranty policy (ies) and/or certifications as may be required in the Specifications.
- Parts, service, operators and maintenance manual(s) as may be required in the Technical Specifications.

6.0 SHIPPING TERMS:

6.1 Prices shall be prepaid F.O.B. Destination to the delivery locations, Houston, TX, as indicated on individual City of Houston purchase orders. The Contractor shall retain title and control of all goods until they are delivered and the contract of coverage has been completed. All risk of transportation and all related charges shall be the responsibility of the Contractor. All claims for visible or concealed damage shall be filed by the Contractor. The City will notify the Contractor promptly of any damaged goods and shall assist the Contractor in arranging for inspection.

7.0 RESOLUTION OF LATE DELIVERY FOR EQUIPMENT:

7.1 Time is of the essence in this Contract and accordingly all time limits shall be strictly construed and rigidly enforced. The work shall be furnished and fully completed within the delivery time specified in the Bid Proposal and Purchase Order to be furnished to the Contractor by the City. In the event that the work or any portions thereof shall remain uncompleted after expiration of the specified time, the Contractor shall furnish to the City a like number of comparable equipment for the City's use until such time as the ordered equipment are delivered. The equipment shall be furnished to the

City with insurance to cover the use of this equipment by City personnel and in pursuit of the City's business. Should the Contractor not furnish such specified equipment during the late delivery period, the City retains the right to lease such equipment from a equipment leasing firm and the Contractor agrees and authorizes the City to deduct all such costs associated with such leases from the amounts due and owing to the Contractor under the Purchase Order. The City may avail itself of other remedies that may be available to it in law or equity as to any other event of default

7.2 The Contractor will not be liable for delays in performing its obligations to the extent such delays are caused by unforeseeable conditions that are beyond the Contractor's reasonable control and directly interfere with performance, and are without the Contractor's fault or negligence (force majeure). However, the Contractor shall provide written notice to the City of the cause and extent of an **excusable delay** requesting a time extension equal to the estimated duration thereof. Upon cessation of the event causing the delay, the Contractor shall provide written notice to the City of the actual delay incurred. Determination of force majeure shall rest solely with the City Purchasing Agent and the receiving department.

8.0 CONFLICT IN TERMS:

8.1 Should there be any conflict between the General Specifications and the Technical Specifications, the Technical Specifications shall prevail.

SECTION B

SCOPE OF WORK/TECHNICAL SPECIFICATIONS

1.0 SUMMARY OF SCOPE OF WORK:

1.1 The Contractor shall provide all labor, equipment, materials, supervision and incidentals necessary to furnish and deliver EZ Valve Insertions, Nominal Sizes 8" and 12", replacement gaskets and a Valve Insertion System in strict accordance with these specifications. The Contractor shall be required to test and deliver the specified equipment in optimum working condition.

2.0 GENERAL INFORMATION:

BID ITEM No. 1 Valve, EZ, Insertion System:

2.1 The ***City Approved Equal*** material specifications must be ***equal to or greater*** than the EZ Valve Insertion System. The equipment must be capable of valve installation and line stopping, without shutdown, at one location, of pipe sizes, in the range of 4” to 12” diameters. The capabilities specified herein are minimum mandatory requirements that must be met by any Insertion Equipment. The Insertion Valve System offered must have the capability to function as a permanent valve or as a temporary line stop when the bonnet and wedge assembly are removed. This equipment shall consist of tapping unit, and a detachable rotary chain drive feed.

2.1.1 The end mill machine must be of 4” to 12” capability

2.1.2 The drive motor must be pneumatic with 1” hose operational at 90-100 cfm (cubic feet per minute) at 100 psi (pounds per square inch).

2.1.3 There must be two end mill cutters, 1, 4” to 8” and 1, 10” to 12”.

2.1.4 There must be two sets of replacement teeth 1 set of 6 – 45 R/L 4” to 8” and 1 set of 8 – 60 R/L 10” to 12”.

2.1.5 The rotating feed apparatus must be 4” to 12”.

2.1.6 The end rings must be a complete set of 4”, 6”, 8”, 10” and 12”. There must be an additional set of 8” and 12” end rings to accommodate Class 150 and 200 asbestos cement pipe outside diameters.

2.1.7 There must be five valve adapter flanges to mount the cutter assembly.

2.1.8 There must be a gear box, drive chain and export hose.

2.1.9 There must be a chip flush completion apparatus.

2.1.10 There must be chip flush completion fittings.

2.1.11 Supply a hand tool set, consisting of the following:

2.1.11.1 One crescent wrench (200MM)
2.1.11.2 One flat jaw pipe wrench (350MM)
2.1.11.3 One socket ratchet wrench (350MM)
2.1.11.4 One open end wrench (14MM)
2.1.11.5 One open end wrench (15MM)

2.1.11.6 One open end wrench (17MM)
2.1.11.7 One open end wrench (24MM)
2.1.11.8 One open end wrench (30MM)
2.1.11.9 One allen wrench set
2.1.11.10 One socket head (15MM)
2.1.11.11 One socket head (24MM)
2.1.11.12 One socket head (30MM)
2.1.11.13 One paint marker
2.1.11.14 One level
2.1.11.15 One tape rule

2.1.12 Supply 1qt of EZ Valve food grade grease, ***or City approved equal***.

2.1.13 Supply one roll of EZ Valve food grade tape, 2" X 165', ***or City approved equal.***

2.1.14 Supply a storage box in accordance with the folllowing specifications:

2.1.14.1 Assembled Depth must be 24 in
2.1.14.2 Assembled Height must be 28 in
2.1.14.3 Assembled Width must be 48 in
2.1.14.4 Color/Finish must be orange finish
2.1.14.5 Item Weight must be 148 lb
2.1.14.6 Must be a single lid type
2.1.14.7 Must be lockable
2.1.14.8 Storage box material must be steel
2.1.14.9 The size must be mid size
2.1.14.10 The truck storage product type must be portable

BID ITEM No. 2 Valve, EZ, Insertion, Nominal Size, 8":

2.2 EZ Valve II Model No. AC 150- 200 EZ Valve with gaskets for Class 200 AC OD 9.55 - 9.70" or ***City Approved Equal.*** The specifications therefore are as follows:

2.2.1 The valve must be constructed with two (2) piece, ductile iron casting (top & bottom) to be bolted together using ductile iron bolts with zinc alloy anodes (corrosion protection) manufactured to the ductile iron specification of ***American Society for Testing and Materials*** (ASTM) 536 65-45-12. The top must incorporate a slide gate valve to mount the end mill cutting machine during installation and to facilitate removal of valve bonnet and placement of solid plate for line stopping operations. The valve must be capable of pressure-tight assembly to exterior of the pipe in which flow is to be stopped at a working pressure not to exceed 250 PSI.

2.2.2 The valve must meet or exceed the ***American Water Works Association*** (AWWA) Specification C509 for resilient seal valves suitable for potable water service. Valves shall have the same number of turns to open and close per size as single body conventional resilient seal valves.

2.2.3 The valve must use stainless steel 304 fasteners joining the valve bonnet to the valve top casting, unless otherwise noted in assembly drawings. The final restraint fasteners (360 degree) around the valve casting shall be constructed of Stainless Steel 304. The valve stem shall be made of Stainless Steel 1 CR 12, with a tensile strength of 6,000 psi.

2.2.4 The ductile iron gate must have a resilient rubber seal 360 degrees around the gate and is expandable to the ID (inside diameter) of the pipe.

2.2.5 The valve body must have an E Coating, a diameter range 9.40” - 9.70” and must be furnished with gaskets to accommodate asbestos cement class 200 pipe with diameter range 9.55” - 9.70”.

BID ITEM No.3 Valve, EZ, Insertion, Nominal Size, 8”:

2.3 EZ Valve II Model No. CI, DI, C-900 EZ Valve with Gaskets for CI, DI, C-900 OD 9.55 - 9.70” or ***City Approved Equal.*** The specifications therefore are as follows:

2.3.1 The valve must be constructed with two (2) piece, ductile iron casting (top & bottom) to be bolted together using ductile iron bolts with zinc alloy anodes (corrosion protection) manufactured to the ductile iron specification of ASTM 536 65-45-12. The top must incorporate a slide gate valve to mount the end mill cutting machine during installation and to facilitate removal of valve bonnet and placement of solid plate for line stopping operations. The valve must be capable of pressure-tight assembly to exterior of the pipe in which flow is to be stopped at a working pressure not to exceed 250 PSI.

2.3.2 The valve must meet or exceed AWWA Specification C509 for resilient seal valves suitable for potable water service. Valves shall have the same number of turns to open and close per size as single body conventional resilient seal valves.

2.3.3 The valve must use stainless steel 304 fasteners joining the valve bonnet to the valve top casting, unless otherwise noted in assembly drawings. The final restraint fasteners (360 degree) around the valve casting shall be constructed of Stainless Steel 304. The valve stem shall be made of Stainless Steel 1 CR 12, with a tensile strength of 6,000 psi.

2.3.4 The ductile iron gate must have a resilient rubber seal 360 degrees around the gate and is expandable to the ID (inside diameter) of the pipe.

2.3.5 The valve body must have an E Coating, a diameter range 9.05” - 9.30” and must be furnished with gaskets to accommodate Cast Iron, Ductile Iron and C-900 pipe with diameter range 9.05” - 9.15”

BID ITEM No.4 Valve, EZ, Insertion, Nominal Size, 12”:

2.4 EZ Valve II Model No. CI, DI, C-900 EZ Valve with Gaskets for CI, DI, C-900 OD 13.20 – 13.30 or ***City Approved Equal.*** The specifications therefore are as follows:

2.4.1 The valve must be constructed of a two (2) piece ductile iron casting (top & bottom) to be bolted together using ductile iron bolts with zinc alloy anodes (corrosion protection) manufactured to the ductile iron specification of ASTM 536 65-45-12. The top must incorporate a slide gate valve to mount the end mill cutting machine during installation and to facilitate removal of valve bonnet and placement of solid plate for line stopping operations. The valve must be capable of a pressure-tight assembly to the exterior of the pipe in which flow is to be stopped at a working pressure not to exceed 250 PSI.

2.4.2 The valve must meet or exceed AWWA Specification C509 for resilient seal valves suitable for potable water service. Valves must have the same number of turns to open and close per size as single body conventional resilient seal valves.

2.4.3 The valve must use stainless steel 304 fasteners joining the valve bonnet to the valve top casting, unless otherwise noted in assembly drawings The final restraint fasteners (360 Degree) around the valve casting must be constructed of stainless

steel 304. The valve stem must be made of stainless steel 1 CR 12, with a tensile strength of 6,000 psi.

2.4.4 The ductile iron gate must have a resilient rubber seal 360 degrees around the gate and is expandable to the ID (Inside Diameter) of the pipe.

2.4.5 The valve body must have an E Coating, a diameter range 12.65" – 13.45"and shall be furnished with gaskets to accommodate Cast Iron, Ductile Iron and C-900 pipe with diameter range from 13.20" to 13.30"

BID ITEM No.5 Valve, EZ, Insertion, Nominal Size, 12":

2.5 EZ Valve II Model No. 150- 200 AC EZ Valve with Gaskets for CLASS 200 AC OD 14.25 - 14.40" or ***City Approved Equal.*** The specifications therefore are as follows:

2.5.1 The valve must be constructed of a two (2) piece ductile iron casting (top & bottom) to be bolted together using ductile iron bolts with zinc alloy anodes (corrosion protection) manufactured to the ductile iron specification of ASTM 536 65-45-12. The top must incorporate a slide gate valve to mount the end mill cutting machine during installation and to facilitate removal of valve bonnet and placement of solid plate for line stopping operations. The valve must be capable of a pressure-tight assembly to the exterior of the pipe in which flow is to be stopped at a working pressure not to exceed 250 PSI.

2.5.2 The valve must meet or exceed AWWA Specification C509 for resilient seal valves suitable for potable water service. Valves must have the same number of turns to open and close per size as single body conventional resilient seal valves.

2.5.3 The valve must use stainless steel 304 fasteners joining the valve bonnet to the valve top casting, unless otherwise noted in assembly drawings The final restraint fasteners (360 Degree) around the valve casting must be constructed of stainless steel 304. The valve stem must be made of stainless steel 1 CR 12, with a tensile strength of 6,000 psi.

2.5.4 The ductile iron gate must have a resilient rubber seal 360 degrees around the gate and is expandable to the ID (Inside Diameter) of the pipe.

2.5.5 The valve body must have an E Coating, a diameter range 13.70 – 14.40""and must be furnished with gaskets to accommodate asbestos cement class 150 pipe with diameter range from 14.05"- 14.25".

BID ITEM No.6 8" – AC 150 Valve Gasket 9.35 – 9.50"

2.6 Valve Gasket must be ***Ethylene Propylene Diene Monomer*** (EPDM) elastomer, approved for use with water, oils and dilute acids up to 150°F or ***City Approved Equal***.

BID ITEM No.7 12" – AC 150 Valve Gasket 14.05 - 14.25"

2.7 Valve Gasket must be EPDM elastomer, approved for use with water, oils and dilute acids up to 150°F or ***City Approved Equal***.

3.0 WARRANTY OF SERVICES:

3.1 *Definitions:* "Acceptance" as used in this clause, means the act of an authorized representative of the City by which the City assumes for itself, approval of specific services as partial or complete performance of the contract.

"Correction" as used in this clause, means the elimination of a defect.

3.2 Notwithstanding inspection and acceptance by the City or any provision concerning the conclusiveness thereof, the Contractor warrants that all services performed under this contract will, at the time of acceptance, be free from defects in workmanship and conform to the requirements of this contract. The City shall give written notice of any defect or nonconformance to the Contractor within a one-year period from the date of acceptance by the City. This notice shall state either (1) that the Contractor shall correct or re-perform any defective or non-conforming services at no additional cost to the City, or (2) that the City does not require correction or re-performance.

3.3 If the Contractor is required to correct or re-perform, it shall be at no cost to the City, and any services corrected or re-performed by the Contractor shall be subject to this clause to the same extent as work initially performed. If the Contractor fails or refuses to correct or re-perform, the City may, by contract or otherwise, correct or replace with similar services and charge to the Contractor the cost occasioned to the City thereby, or make an equitable adjustment in the contract price.

3.4 If the City does not require correction or re-performance, the City shall make an equitable adjustment in the contract price.

4.0 Drawing: EZ Valve Cut Sheet with Sizing:

4.1 The EZ Valve Cut Sheet with Sizing provided on the following page.

EZ VALVE CUT SHEET WITH SIZING

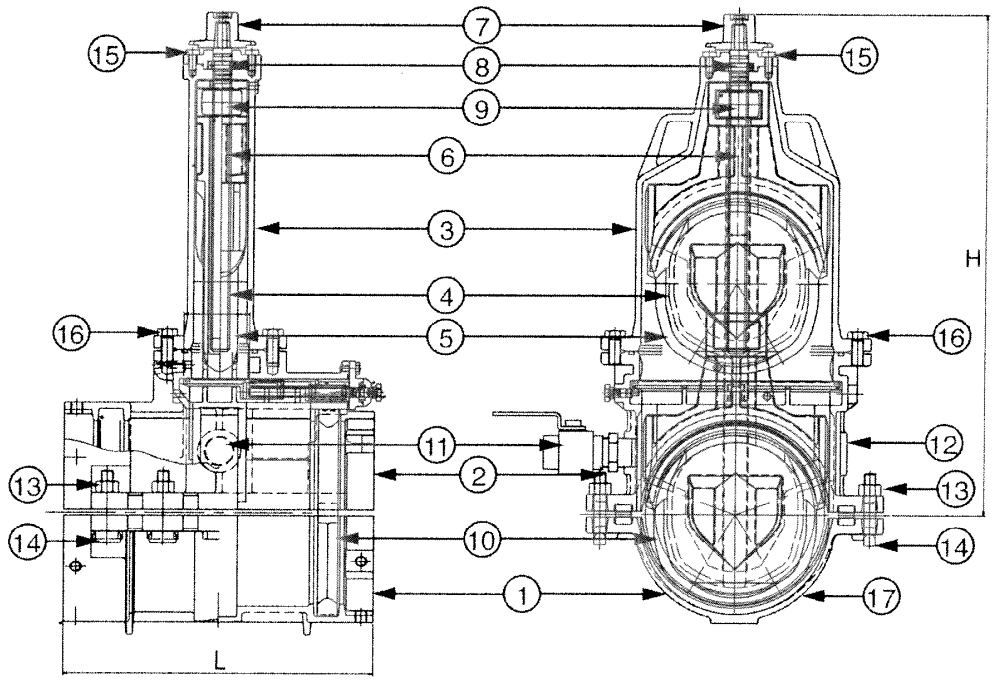

Item No.	Description	Material
1	Bottom Half of Body	DUCTILE IRON
2	Upper Half of Body	DUCTILE IRON
3	Bonnet Body	DUCTILE IRON
4	Gate	DUCTILE IRON
5	Gate Rubber	EPDM
6	Stem (Feed Srew)	STAINLESS STEEL
7	Wrench Nut	DUCTILE IRON
8	Set Collar	BRASS
9	Stem Nut	BRONZE
10	Gasket	EPDM
11	Chip Flushing Port	
12	EM Cutting Port	
13	Sacrificial Anode Bolts/ Nuts	DUCTILE IRON
14	Sacrificial Anodes	Zinc
15	O-Rings	EPDM
16	Bonnet Bolts	STAINLESS STEEL
17	E-Coating	NSF 61

ADVANCED VALVE TECHNOLOGIES

EZ VALVE™

Rated at 250 PSI — Meets AWWA C-509

SIZE	HEIGHT (H)	LENGTH (L)
4"	13"	17 3/4"
6"	17"	17 3/4"
8"	21"	17 3/4"
10"	25"	19 3/4"
12"	30"	19 3/4"

A PDF version of this EZ Valve Cut Sheet Drawing can be viewed on the following web link
https://purchasing.houstontx.gov/buyer/BidDocumentManager.aspx?id=N23815

SECTION C

GENERAL TERMS AND CONDITIONS

1.0 COMPETITIVE BIDDING:

1.1 It is the intent of the City of Houston to solicit the lowest and best responsible bid or price under competitive conditions. All materials and/or equipment shall be new unless stated otherwise. Prospective bidders are advised that the specifications within this bid invitation are not to be considered restricted to any referenced manufacturer.

2.0 AWARD:

2.1 The City reserves the right to consider and make awards of bids on articles of similar nature that will in all respects serve the purpose for which the purchase is being made. The City reserves the right to be the sole judge as to whether such articles will serve the purpose.

2.2 Unless otherwise specified, the City reserves the right to accept or reject in whole or in part any bid submitted or to waive any informalities that are in the best interests of the City.

3.0 CONDITIONS PART OF BID:

3.1 In the event of any conflict, the terms and provisions incorporated in the bid specifications shall control over the terms and provisions of the General Terms & Conditions for any or all purposes. Otherwise, all the terms and provisions appearing within the General Terms & Conditions shall be given full effect and shall be construed in harmony to the maximum extent by the parties hereto.

3.2 The failure of the City to insist, in any one or more instances, upon performance of any of the terms, covenants or conditions of this Contract, General Terms & Conditions or Specifications shall not be construed as a waiver or relinquishment of the future performance of such term, covenant or condition by the City, but the obligation of the Contractor with respect to such future performance shall continue in full force and effect.

4.0 SILENCE OF SPECIFICATIONS:

4.1 The apparent silence of these specifications as to any detail or the apparent omission from them of a detailed description concerning any point shall be regarded as meaning that only the best commercial practice shall prevail and only materials and workmanship of first quality are acceptable. All interpretations of these specifications shall be made upon the basis of this statement.

5.0 SPECIFIED EQUIPMENT, OR EQUIVALENT:

5.1 Wherever in the specifications any materials or processes are indicated or specified by patent of proprietary name and/or by name of manufacturer, such specifications shall be deemed to be used for the purpose of facilitating descriptions of the performance, materials and/or processes desired and shall be deemed to be followed by the words, "or equivalent", if not so stated in the specifications herein.

5.2 The burden of proof shall rest with the bidder, in the course of a technical evaluation, to prove that the proposed item(s) are equivalent to the performance, materials, processes, or articles specified. DETERMINATION AS TO WHETHER THE ITEM (S) BID IS (ARE) EQUIVALENT TO THOSE SPECIFIED SHALL REST SOLELY WITH THE CITY PURCHASING AGENT AND THE RECEIVING DEPARTMENT.

6.0 BRAND NAME OR TRADE NAME:

6.1 Any manufacturer’s names, trade names, brand names, or catalog numbers used in the

specifications are for the purpose of describing and establishing the general quality level, design and performance desired. Such references are not intended to limit or restrict bidding by other Contractors/Suppliers, but are intended to approximate the quality design or performance that is desired. Any bid that proposes like quality, design or performance, will be considered. Equivalent products will be considered, provided a complete description and product literature is provided. Unless a specific exception is made, the assumption will be that the item bid is exactly as specified on the Invitation to Bid.

7.0 PATENTS:

7.1 The Contractor agrees to indemnify and save harmless the city, its agents, employees, officers, and legal representatives from all suits and actions of every nature and description brought against them or any of them, for or on account of the use of patented appliances, products or processes, and it shall pay all royalties and charges which are legal and equitable. Evidence of such payment or satisfaction shall be submitted, upon request of the City Purchasing Agent, as a necessary requirement in connection with the final estimate for payment in which such patented appliance, products or processes are used.

8.0 TERMINATION OF AGREEMENT:

8.1 By the City for Convenience:

8.1.1 The City Purchasing Agent may terminate this Contract at any time upon 30-calendar days notice in writing to the Contractor. Upon receipt of such notice, the Contractor shall, unless the notice directs otherwise, discontinue all services in connection with the performance of the contract and shall proceed to cancel promptly all existing orders and contracts insofar as such orders and contracts are chargeable to this Contract. As soon as practicable after the receipt of notice of termination, the Contractor shall submit a statement to the appropriate department(s) showing in detail the services performed or items delivered under this Contract to date of termination. The City agrees to compensate the Contractor for that portion of the prescribed charges for which the services were actually performed or items delivered under this contract and not previously paid.

8.2 By the City for Default by the Contractor:

8.2.1 In the event that the materials and/or services furnished by the Contractor do not conform to the standard set forth herein, or if the deliveries and servicing of this contract do not conform to the requirements detailed herein, the City through a written notice from the City Purchasing Agent to the Contractor describing such default may as its options:

(1) Terminate the contract for default and the City shall have no further obligation under the Contract.

(2) Allow the Contractor to cure default within a reasonable time as specified in the notice. The City, at its sole option, may extend the proposed date of termination to a later date. If prior to the proposed date of termination, the Contractor cures such default to the City's satisfaction, then the proposed termination shall be ineffective. If The Contractor fails to cure such default prior to the propose date of termination, then the City may terminate its performance under this contract as of such date and have no further obligation under the contract.

8.2.2 In the event of failure to deliver any or all of the items or to perform required services, the City may cover its loss by reasonably procuring from another source the items not delivered or the services not performed. The Contractor shall be responsible for and shall pay to the City immediately upon demand the difference in price between that offered by the Contractor and that which the City was forced to pay for covering the Contractor's failure to deliver or perform services.

8.3 By the Contractor for Default by City:

8.3.1 Default by the City shall occur if the City fails to perform or observe the terms and conditions of this Contract required to be performed or observed by the City, and the Contractor gives notice in writing to the City within 30 calendar days of the act or omission claimed by the Contractor to constitute default on the part of the City.

8.3.2 Upon receipt of such notice in writing from the Contractor, however, the City shall have 30 calendar days to cure such default. The Contractor, at its sole option, may extend the proposed date of termination to a later date.

8.3.3 If City cures such default prior to the proposed date of termination, the proposed termination shall be ineffective. If the City fails to cure such default prior to the propose date of termination, then the Contractor may terminate its performance under this contract as of such date

9.0 <u>SUCCESSORS & ASSIGNS:</u>

9.1 The Contractor may not assign this contract or dispose of substantially all of its assets without the written consent of the City Purchasing Agent. The Contractor's failure to obtain such consent shall be an event of default, authorizing the City Purchasing Agent to terminate this contract according to its terms.

10. <u>RELEASE:</u>

10.1 THE CONTRACTOR AGREES TO AND SHALL RELEASE THE CITY, ITS AGENTS, EMPLOYEES, OFFICERS, AND LEGAL REPRESENTATIVES (COLLECTIVELY THE "CITY") FROM ALL LIABILITY FOR INJURY, DEATH, DAMAGE, OR LOSS TO PERSONS OR PROPERTY SUSTAINED IN CONNECTION WITH OR INCIDENTAL TO PERFORMANCE UNDER THIS AGREEMENT, EVEN IF THE INJURY, DEATH, DAMAGE, OR LOSS IS CAUSED BY THE CITY'S SOLE OR CONCURRENT NEGLIGENCE AND/OR THE CITY'S STRICT PRODUCTS LIABILITY OR STRICT STATUTORY LIABILITY.

11.0 <u>INDEMNIFICATION:</u>

11.1 THE CONTRACTOR AGREES TO AND SHALL DEFEND, INDEMNIFY, AND HOLD THE CITY, ITS AGENTS, EMPLOYEES, OFFICERS, AND LEGAL REPRESENTATIVES (COLLECTIVELY THE "CITY") HARMLESS FOR ALL CLAIMS, CAUSES OF ACTION, LIABILITIES, FINES, AND EXPENSES (INCLUDING, WITHOUT LIMITATION, ATTORNEYS' FEES, COURT COSTS, AND ALL OTHER DEFENSE COSTS AND INTEREST) FOR INJURY, DEATH, DAMAGE, OR LOSS TO PERSONS OR PROPERTY SUSTAINED IN CONNECTION WITH OR INCIDENTAL TO PERFORMANCE UNDER THIS AGREEMENT INCLUDING, WITHOUT LIMITATION, THOSE CAUSED BY:

(1) THE CONTRACTOR AND/OR ITS AGENTS', EMPLOYEES', OFFICERS', DIRECTORS', CONTRACTORS', OR SUBCONTRACTORS' (COLLECTIVELY IN NUMBERED PARAGRAPHS 1-3, "THE CONTRACTOR") ACTUAL OR ALLEGED NEGLIGENCE OR INTENTIONAL ACTS OR OMISSIONS;

(2) THE CITY'S AND THE CONTRACTOR'S ACTUAL OR ALLEGED CONCURRENT NEGLIGENCE, WHETHER THE CONTRACTOR IS IMMUNE FROM LIABILITY OR NOT; AND

(3) THE CITY'S AND THE CONTRACTOR'S ACTUAL OR ALLEGED STRICT PRODUCTS LIABILITY OR STRICT STATUTORY LIABILITY, WHETHER THE CONTRACTOR IS IMMUNE FROM LIABILITY OR NOT.

11.2 THE CONTRACTOR SHALL DEFEND, INDEMNIFY, AND HOLD THE CITY HARMLESS DURING THE TERM OF THIS AGREEMENT AND FOR FOUR YEARS AFTER THE AGREEMENT TERMINATES. THE CONTRACTOR'S INDEMNIFICATION IS LIMITED TO $500,000 PER

OCCURRENCE. THE CONTRACTOR SHALL NOT INDEMNIFY THE CITY FOR THE CITY'S SOLE NEGLIGENCE.

11.3 INDEMNIFICATION PROCEDURES:

11.3.1 Notice of Claims. If the City or the Contractor receives notice of any claim or circumstances which could give rise to an indemnified loss, the receiving party shall give written notice to the other party within 10 days. The notice must include the following:

(a) a description of the indemnification event in reasonable detail,

(b) the basis on which indemnification may be due, and

(c) the anticipated amount of the indemnified loss.

11.3.2 This notice does not stop or prevent the City from later asserting a different basis for indemnification or a different amount of indemnified loss than that indicated in the initial notice. If the City does not provide this notice within the 10 day period, it does not waive any right to indemnification except to the extent that the Contractor is prejudiced, suffers loss, or incurs expense because of the delay.

11.3.3 Defense of Claims.

(a) Assumption of Defense. The Contractor may assume the defense of the claim at its own expense with counsel chosen by it that is reasonably satisfactory to the City. The Contractor shall then control the defense and any negotiations to settle the claim. Within 10 days after receiving written notice of the indemnification request, the Contractor must advise the City as to whether or not it will defend the claim. If the Contractor does not assume the defense, the City shall assume and control the defense, and all defense expenses constitute an indemnification loss.

(b) Continued Participation. If the Contractor elects to defend the claim, the City may retain separate counsel to participate in (but not control) the defense and to participate in (but not control) any settlement negotiations. The Contractor may settle the claim without the consent or agreement of the City, unless it (i) would result in injunctive relief or other equitable remedies or otherwise require the City to comply with restrictions or limitations that adversely affect the City, (ii) would require the City to pay amounts that Contractor does not fund in full, (iii) would not result in the City's full and complete release from all liability to the plaintiffs or claimants who are parties to or otherwise bound by the settlement.

12.0 INSURANCE: (See City of Houston's website for sample certificate)

12.1 The Contractor shall have insurance coverage as follows:

- Commercial General Liability shall be $500,000 per occurrence; $1,000,000 aggregate, per 12-month policy period.
- Automobile Liability Insurance for autos furnished or used in the course of performance of this Contract. Including Owned, Non-owned, and Hired Auto coverage. (Any Auto coverage may be substituted for Owned, Non-owned and Hired Auto coverage.) If no autos are owned by the Contractor, coverage may be limited to Non-owned and Hired Autos. If Owned Auto coverage cannot be purchased by the Contractor, Scheduled Auto coverage may be substituted for Owned Auto coverage. EACH AUTO USED IN PERFORMANCE OF THIS CONTRACT MUST BE COVERED IN THE LIMITS SPECIFIED. $1,000,000 - Combined Single Limit per occurrence; $1,000,000 aggregate, per 12-month policy period.
- **Worker's Compensation** including Broad Form All States endorsement shall be in statutory amount.
- **Employer's Liability:** Bodily Injury/Accident $100,000; Bodily Injury/Disease $100,000 (per employee); Bodily Injury/Disease $100,000 (policy limit).

12.2 The issuer of any policy (1) shall have a Certificate of Authority to transact insurance business in Texas or (2) shall be an eligible non-admitted insurer in Texas, and shall have a Best's rating of at least B+, and a Best's Financial Size Category of Class VI or better, according to the most current edition of Best's Key Rating Guide.

12.3 All insurance policies required by this Contract shall require on their face that 1) the City of Houston is named as an additional insured; 2) the insurance carrier waives any rights of subrogation against the City; and 3) it shall give thirty (30) days written notice to the City before any policy required by this Contract is cancelled. Within such thirty (30) day period, the Contractor covenants that it will provide other suitable policies in lieu of those about to be cancelled so as to maintain in effect the coverage required under the provisions hereof. Failure or refusal of the Contractor to obtain and keep in force the above-required insurance coverage shall authorize the City, at its option, to terminate this Contract at once.

12.4 **REQUIREMENTS FOR CERTIFICATE OF INSURANCE:**

12.4.1 Certificate must not be more than 30 days old.
12.4.2 Name and Address of Producer writing coverage.
12.4.3 Name of each insurance company providing coverage (as listed or on company's Certificate of Authority on file with the Texas Department of Insurance, or in Best's Key Rating Guide.)
12.4.4 Name and address of insured (as shown on policy).
12.4.5 Letter in the column must reference the insurer of the policy being described.
12.4.6 Must be a policy number; no binders will be accepted.
12.4.7 Date policy became effective.
12.4.8 Expiration date must be at least **60** days from date of delivery of certificate.
12.4.9 Name and file number of project (Bid Name and Bid Number).
12.4.10 Name of project manager (Buyer).
12.4.11 Signature or facsimile signature of authorized representative of Producer (blue ink preferred).

12.5 Prior to award and/or starting work, the Contractor must present a Certificate of Insurance evidencing the insurance coverage specified above. This is a mandatory requirement.

Forward to Buyer at: **City of Houston/Administration & Regulatory Affairs Department**
Strategic Purchasing Division
P.O. Box 1562
Houston, Texas 77251-1562

INSURANCE IS NOT REQUIRED IF ITEM IS DROP-SHIPPED BY MANUFACTURER OR IS DELIVERED BY COMMON CARRIER.

13.0 MINORITY AND WOMEN BUSINESS ENTERPRISES:

13.1 These provisions apply to goal-oriented contracts. A goal oriented contract means any contract awarded for the supply of goods or non-professional services of approximately $100,000.00 for which competitive bids are required by law and which the City Purchasing Agent has determined to have City of Houston Certified MWBE subcontracting potential.

13.2 The Contractor agrees to comply with the City's Minority and Women Business Enterprise programs as set out in Chapter 15, Article V of the City of Houston Code of Ordinances insofar as such programs apply to this Contract. The Contractor further agrees that it will make good faith efforts to award subcontracts or supply agreements in at least ***0%*** of the value of this Contract to Minority and Women-owned Business Enterprises certified by the City's Affirmative Action Division. In addition, the Contractor acknowledges that it has reviewed the requirements for good faith efforts that are on file with the City's Affirmative Action Division, is familiar with such requirements, and will comply with them.

13.3 The Contractor shall require written subcontracts with all MWBE subcontractors and suppliers, which must contain the terms, set out in the documents attached herein. If the Contractor is an individual person (as distinguished from a corporation, partnership, or other legal entity), and the amount of the subcontract is $50,000 or less, then the subcontract must also be signed by the attorneys of the respective parties.

13.4 Refer to the "City of Houston Goal-Oriented Minority and Women Business Enterprises Contract Provisions" attachment, which is incorporated in the specifications herein by this reference for all purposes, for more detailed information on this requirement.

The above-mentioned goal will apply to ***Bid Items No. 1, 2 & 3. 4, 5. 6 & 7.***

14.0 REJECTIONS:

14.1 Articles not in accordance with samples and specifications must be removed by the Contractor and at its expense. All disputes concerning quality of supplies delivered under this offer will be determined by the City Purchasing Agent or designated representative.

14.2 All articles enumerated in the offer shall be subject to inspection on delivery by an officer designated for the purpose and if found inferior to the quality called for, or not equal in value to the Department's samples, or deficient in weight, measurements, workmanship or otherwise, this fact shall be certified to the City Purchasing Agent who shall have the right to reject the whole or any part of the same.

15.0 INVOICING:

15.1 In order to expedite payments all invoices must be submitted in triplicate, itemized as to quantity, part and/or model number, description in the same order and form as in the City of Houston Purchase Order. Variations will only delay payment. In addition, invoices must show the name of the Department, Division or Section to which the merchandise was delivered, and the City of Houston Purchase Order Number.

15.2 All delivery tickets must have a description of the item delivered.

15.3 Mail invoices to the Accounts Payable Section of the Department and to the address, as noted on individual purchase orders.

15.4 Delivery tickets and packing slips will contain the same information as the invoice.

15.5 All packing slips and delivery tickets must be signed by the receiving employee with their City Employee Number and must be signed by the Contractor’s Representative.

16.0 TAXES:

16.1 The City is exempt from the Federal Excise and Transportation Tax, and the limited Sales and Use Tax. Unless the Bid Form or Specifications specifically indicate otherwise, the bid price must be net exclusive of above-mentioned taxes. A Contractor desiring refunds of, or exemptions from, taxes paid on merchandise accepted by the City, must submit the proper forms, and the City Purchasing Agent, if satisfied as to the facts, may approve or issue the necessary certificates.

17.0 PAYMENT:

17.1 Payment is due thirty (30) days after the City has approved the invoice or after the City has accepted the equipment and all required documents, whichever occurs later. Invoices received that do not agree with the provisions set forth herein shall be returned for correction and will result in payment being delayed.

17.2 PAYMENT OF SUBCONTRACTORS:

17.2.1 The Contractor shall make time payments to all persons and entities supplying labor, materials or equipment for the performance of this Contract. The Contractor agrees to protect, defend, and indemnify the City from any claims or liability arising out of the Contractor's failure to make such payments. (Disputes relating to payment of MWBE subcontractors shall be submitted to arbitration in the same manner as any other disputes under the MWBE subcontract. Failure of the Contractor/ Supplier to comply with the decisions of the arbitrator may be deemed, at the sole discretion of the City, a material breach leading to termination of this Contract.)

18.0 INSPECTIONS AND AUDITS:

18.1 The City reserves all rights to review all payments made to the Contractors by auditing at a later date. Subject to such audit, may overpayments may be recovered from the Contractor.

18.2 City representatives may have the right to perform, or have performed, (1) audits of the Contractor's books and records, and (2) inspections of all places where work is undertaken in connection with this Agreement. The Contractor shall keep its books and records available for this purpose for at least three years after this Agreement terminates. This provision does not affect the applicable statute of limitations.

18.3 City representatives have the right to examine the books of all subcontractors and/or suppliers supplying goods and/or services under the contract insofar as those books and records relate to performance under the prime contract.

19.0 CITY OF HOUSTON FAIR CAMPAIGN ORDINANCE:

19.1 The City of Houston Fair Campaign Ordinance makes it unlawful for a Contractor to offer any contribution to a candidate for City elective office (including elected officers and officers-elect). All respondents to this invitation to bid must comply with Houston Code of Ordinances Chapter 18 as amended relating to the contribution and solicitation of funds for election campaigns. Provisions of this ordinance are provided in part in the paragraphs that follow. Complete copies may be obtained from the office of the City Secretary.

19.2 Candidates for city office may neither solicit nor receive contributions except during a period commencing 270 calendar days prior to an election date for which a person is a candidate for such office and ending 90 calendar days after the election date, including run off elections if such candidate is on the ballot.

19.3 Further, it shall be unlawful either for any person who submits a bid or proposal to contribute or offer any contribution to a candidate or for any candidate to solicit or accept any contribution from such person for a period commencing at the time of posting of the City Council Meeting Agenda including an item for the award of the Contract and ending upon the 30th day after the award of the Contract by City Council.

19.4 For the purposes of this Ordinance, a **Contract** is defined as each Contract having a value in excess of $30,000 that is let by the City for professional services, personal services, or other goods or services of any other nature whether the Contract is awarded on a negotiated basis, request for proposal basis, competitive proposal basis or formal sealed competitive bids. The term **Contractor** includes proprietors of proprietorships, partners having an equity interest of 10% or more of partnerships, (including limited liability partnerships and companies), all officers and directors of corporations (including limited liability corporations), and all holders of 10% or more of the outstanding shares of corporations.

19.5 **A STATEMENT DISCLOSING THE NAMES AND BUSINESS ADDRESSES EACH OF THOSE PERSONS WILL BE REQUIRED TO BE SUBMITTED WITH EACH BID OR PROPOSAL FOR A CITY CONTRACT.** Completion of the attached form entitled **"Contractor Submission List"** will satisfy this requirement. Failure to provide this information may be just cause for rejection of your bid or proposal.

20.0 CITY OF HOUSTON CONTRACTOR OWNERSHIP DISCLOSURE ORDINANCE:

20.1 City Council requires knowledge of the identities of the owners of entities seeking to contract with the City in order to review their indebtedness to the City and other qualifying governmental entities prior to entering into contracts. Therefore, all respondents to this invitation to bid must comply with Houston Code of Ordinances Chapter 15, as amended (Sections 15-122 through 15-126) relating to the disclosure of owners of entities bidding on, proposing for or receiving City contracts. Provisions of this ordinance are provided in part in the paragraphs that follow. Complete copies may be obtained from the office of the City Secretary.

20.2 Contracting entity means a sole proprietorship, corporation, non-profit corporation, partnership, joint venture, limited liability company, or other entity that seeks to enter into a contract requiring approval by the Council but excluding governmental entities.

20.3 A contracting entity must submit at the time of its bid or proposal, an affidavit listing the full names and the business and residence addresses of all persons owning 5% or more of a contracting entity or, where a contracting entity is a non-profit corporation, the full names and the business and residence addresses of all officers of the non-profit corporation.

20.4 Completion of the **"Affidavit of Ownership or Control",** included herein, and submitted with the Official Bid or Proposal Form will satisfy this requirement. Failure to provide this information with your bid or proposal may be just cause for rejection of your bid or proposal.

21.0 CHANGE ORDERS:

21.1 At any time during the Agreement Term, the City Purchasing Agent, or designated representative, may issue a change order to increase or decrease the scope of services, or change plans and specifications, as may be necessary to accomplish the general purposes of this Agreement. The Contractor shall furnish the services or deliverables in the change order in accordance with the requirements of this Agreement plus any special provisions, specifications, or special instructions issued to execute the additional work.

21.2 The Contractor shall not make any changes to the specifications or drawings contained herein without written authorization from the City Purchasing Agent or designated representative. The City may refuse to accept all or part of the work performed or equipment/supplies delivered if changes are made to the specifications or drawings without the written authorization of the City Purchasing Agent or designated representative. The City shall not be responsible for costs incurred by the Contractor on unauthorized change orders.

21.3 Documentation acceptable to the City Purchasing Agent as evidence of the Contractor's change(s) shall reference the City's bid specification by section(s) and page number(s). A letter with supporting documentation of the requested change(s) shall be submitted to the City Purchasing Agent, and the City Purchasing Agent must approve any requested changes PRIOR TO ANY CHANGES BEING PERFORMED. The face of the envelope containing this letter shall clearly state, "CHANGE ORDER REQUEST" and THE NUMBER OF THE BID INVITATION AND THE NUMBER(S) OF THE PURCHASE ORDER(S) referenced. Failure to provide clear and concise evidence as stated above and in the format requested will result in denial until the Contractor complies with these provisions. Documentation shall be mailed to:

City Purchasing Agent
City of Houston, Administration & Regulatory Affairs Department
Strategic Purchasing Division
P. O. Box 1562
Houston, TX 77251-1562

21.4 The City Purchasing Agent, or designated representative, may issue change orders, subject to the following limitations:

21.4.1 City Council expressly authorizes the City Purchasing Agent to approve change orders of **$25,000** or less. A change order of more than **$25,000** over the approved contract amount must be approved by City Council.

21.4.2 The total of all change orders issued under this section may not increase the Original Agreement amount by more than 25%.

21.4.3 For any items described in a change order that the Contractor is otherwise required to provide under the Original Agreement, the City shall not pay additional money to the Contractor.