200WDA1-3

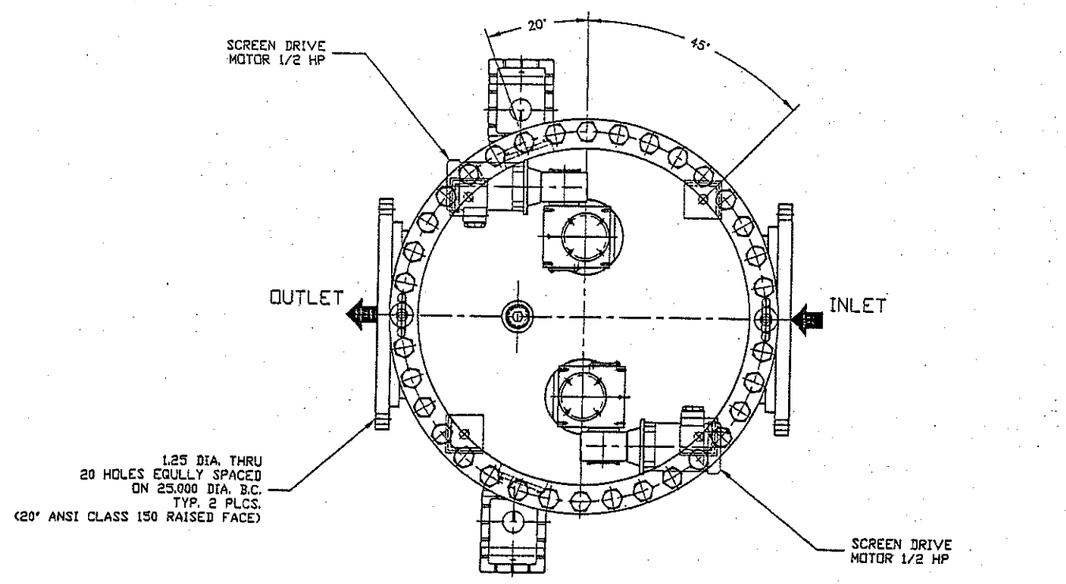


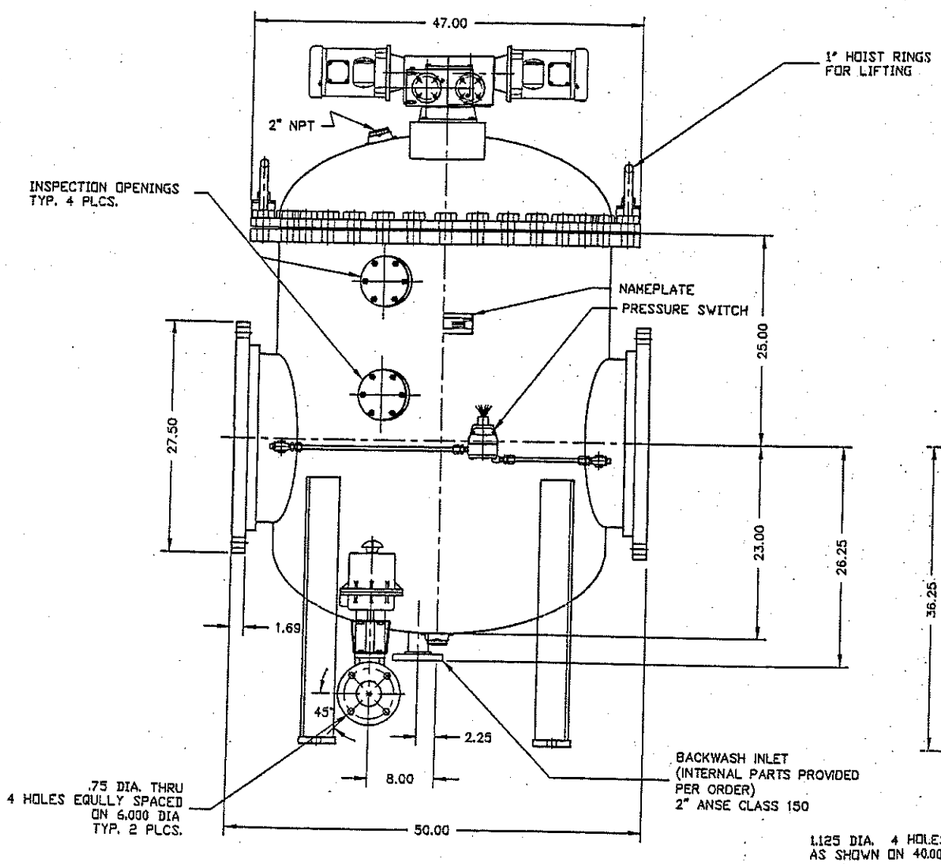


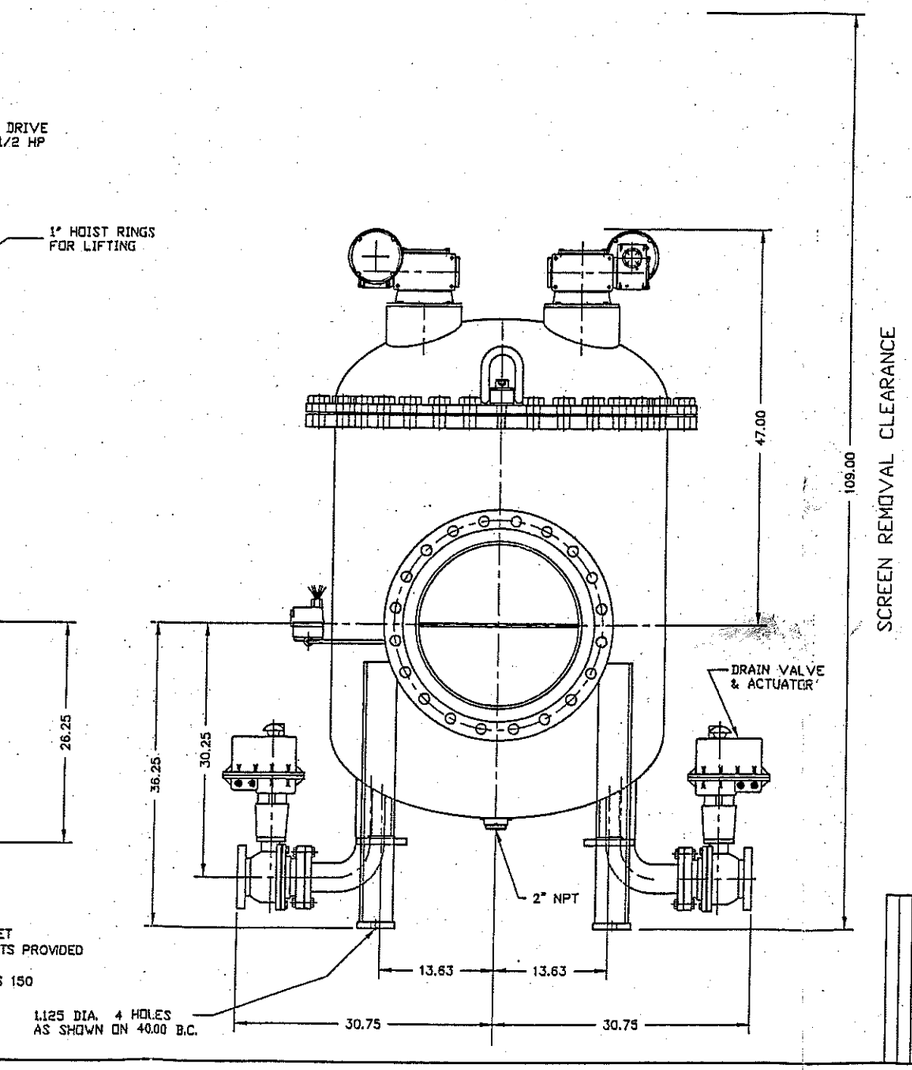


Houston 69th St WWTP
Industrial TX Corp

| | | |
|---|---|---|
| CUSTOMER | Cleveland Gear Company, Inc. a Subsidiary of Vasper Corp. Cleveland, Ohio 44104 U.S.A. | |
| ORDER No. | CLEVELAND GEAR CO., INC. CLAIMS PROPRIETARY RIGHTS TO THE MATERIAL DISCLOSED HEREIN. THIS DRAWING IS ISSUED FOR ENGINEERING INFORMATION ONLY AND MAY NOT BE REPRODUCED OR USED FOR MANUFACTURING PURPOSES WITHOUT WRITTEN PERMISSION FROM CLEVELAND GEAR. NOT COPIED UNLESS SO INDICATED. | |
| REFERENCE | | |
| DRAWN DAL 08/11/04 | TITLE | HELLAN FLUID STRAINER |
| CHECKED DAL 08/11/04 | | 20" AUTOMATIC FABRICATED |
| SCALE 1/8 | | WITH BACKWASH INLETS |
| CAD No. 200WDA1-3 | DWG. NO. 200WDA1-3 | ISSUED 1 |
| DCS No. | | |

Houston 69th St WWTP
Industrial TX Corp

WDA-50

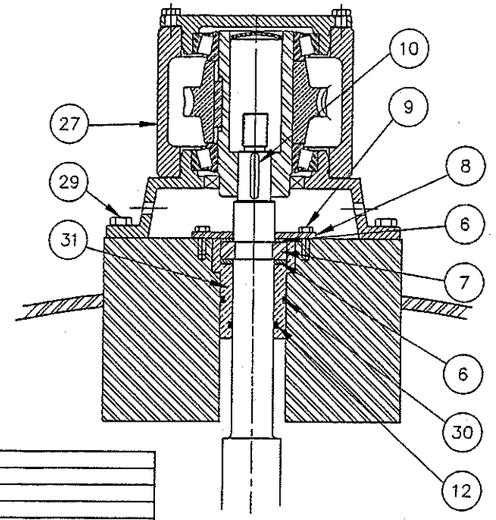


DETAIL C

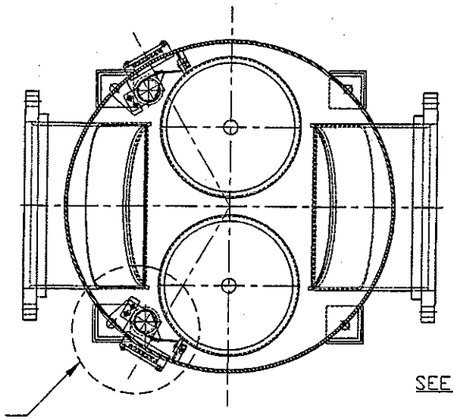


SECTION B-B

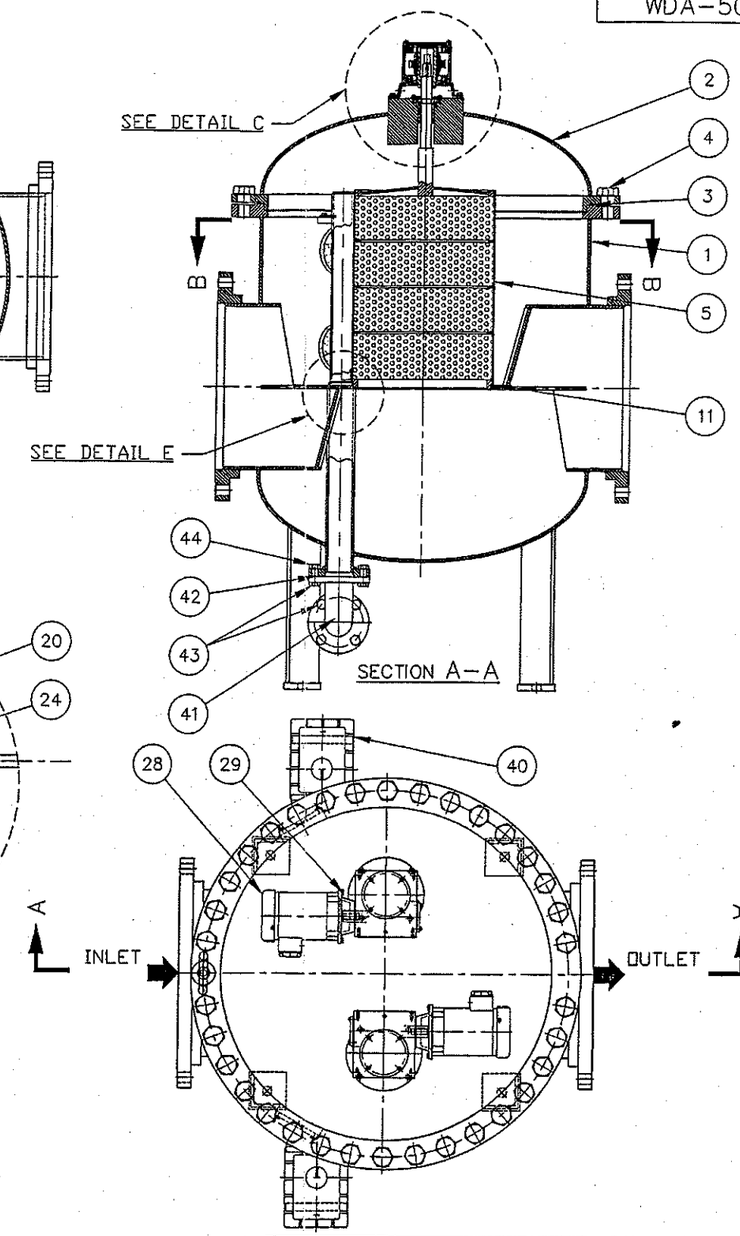


SECTION A-A

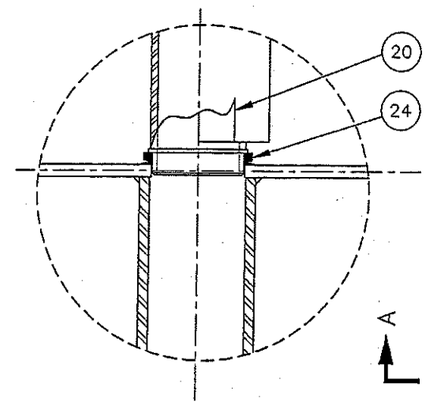


DETAIL E

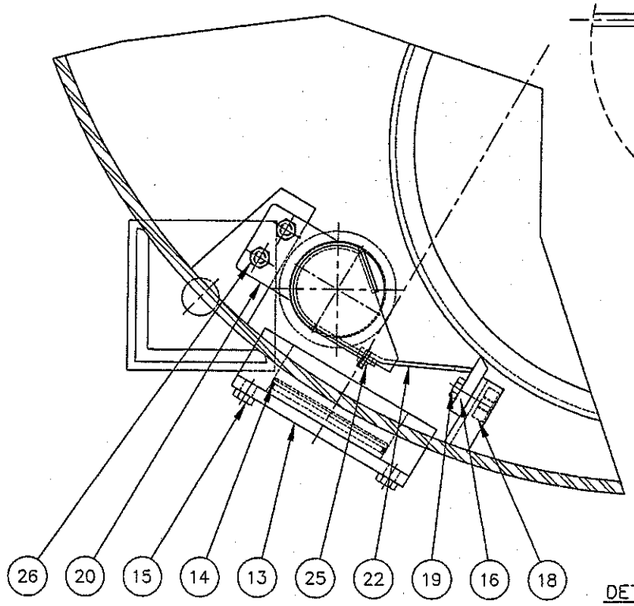


DETAIL D

| ITEM | DESCRIPTION | MATERIAL |
|---|---|---|
| 56 | UNION | MALLEABLE IRON |
| 55 | NIPPLE | CAST IRON |
| 54 | BUSHING | STEEL, ASTM A108 |
| 53 | TUBING | STEEL |
| 52 | STRAIGHT CONNECTOR | STEEL |
| 51 | PLUG, PIPE | CAST IRON |
| 50 | TEE | MALLEABLE IRON |
| 49 | | |
| 48 | SCREW, HEX HEAD | STEEL |
| 47 | RING, HOIST | STEEL |
| 46 | PLUG, PIPE | CAST IRON |
| 45 | PRESSURE SWITCH, DIFF. | STAINLESS STEEL, ASTM A278 304 |
| 44 | NUT, HEX | STEEL, ASME SA-307 GRADE B, ZINC PLATED |
| 43 | SCREW, HEX HEAD | ZINC PLATED, SAE GRADE 2 |
| 42 | GASKET | NITRILE (BUNA-N) |
| 41 | FLANGED PIPE ELBOW | CAST IRON |
| 40 | BALL VALVE | CAST IRON |
| 39 | | |
| 38 | | |
| 37 | | |
| 36 | | |
| 35 | | |
| 34 | | |
| 33 | | |
| 32 | | |
| 31 | BEARING, SCREEN SHAFT | BRONZE |
| 30 | SCREW, HEX HEAD | ZINC PLATED, SAE GRADE 2 |
| 29 | SCREW, HEX HEAD | ZINC PLATED, SAE GRADE 2 |
| 28 | MOTOR | STEEL |
| 27 | REDUCTION UNIT | GREY CAST IRON PER CGC SPEC Z1102-5 |
| 26 | SCREW, HEX HEAD | 316 STAINLESS STEEL |
| 25 | NUT, HEX | 316 STAINLESS STEEL, ASME SA-194 GRADE 8M |
| 24 | SEAL, V-RING | NITRILE, BUNA-N |
| 23 | DRAIN SEPARATOR, RIGHT | 316 STAINLESS STEEL |
| 22 | DRAIN SEPARATOR, LEFT | 316 STAINLESS STEEL |
| 21 | DRAIN TUBE, RIGHT | 316 STAINLESS STEEL |
| 20 | DRAIN TUBE, LEFT | 316 STAINLESS STEEL |
| 19 | SCREW, HEX HEAD | 316 STAINLESS STEEL |
| 18 | CLAMP BAR | 316 STAINLESS STEEL |
| 17 | SCRAPER BAR, RIGHT | 316 STAINLESS STEEL |
| 16 | SCRAPER BAR, LEFT | 316 STAINLESS STEEL |
| 15 | SCREW, HEX HEAD | ZINC PLATED, SAE GRADE 2 |
| 14 | O-RING | NITRILE, BUNA-N, COMPOUND N-674-70 |
| 13 | COVER, INSPECTION | STEEL, ASTM A36 |
| 12 | O-RING | NITRILE, BUNA-N, COMPOUND N-674-70 |
| 11 | SEAL, V-RING | NITRILE, BUNA-N |
| 10 | KEY | STEEL, AISI 1045 |
| 9 | SCREW, HEX HEAD | ZINC PLATED, SAE GRADE 2 |
| 8 | COVER PLATE, COLLAR | STEEL, AISI 1018 CRS |
| 7 | SHAFT COLLAR | STAINLESS STEEL |
| 6 | SPACER | BRONZE, POWDER METAL |
| 5 | SCREEN ASSEMBLY | 316 STAINLESS STEEL |
| 4 | SCREW, HEX HEAD | ZINC PLATED, SAE GRADE 2 |
| 3 | O-RING | NITRILE (BUNA-N) |
| 2 | COVER, BODY, WDA | STEEL, ASTM A36 |
| 1 | BODY, WDA | STEEL, ASTM A36 |

| REV | DATE | DRAWN | DESCRIPTION |
|---|---|---|---|
| 3 | 02/07/05 | RL, VJ, SJ, DWS | ISSUE 3 |
| 2 | OCT-12-04 | SJ/L | ADDED BOM |

CUSTOMER
ORDER NO.
REFERENCE
DRAWN MAP DATE 12/28/01
CHECKED DATE
SCALE 1/8
CAD NO. WDA-50
DCE NO.

Cleveland Gear Company, Inc.
a Subsidiary of Vesper Corp.
Cleveland, Ohio 44104 U.S.A.

CLEVELAND GEAR CO., INC. CLAIMS PROPRIETARY RIGHTS TO THE MATERIAL DISCLOSED HEREON. THIS DRAWING IS ISSUED FOR ENGINEERING INFORMATION ONLY AND MAY NOT BE REPRODUCED OR USED FOR MANUFACTURING PURPOSES WITHOUT WRITTEN PERMISSION FROM CLEVELAND GEAR. NOT OBSERVED UNLESS SO INDICATED

TITLE WDA STRAINER
CROSS SECTION

DWG. NO. WDA-50
ISSUE 3

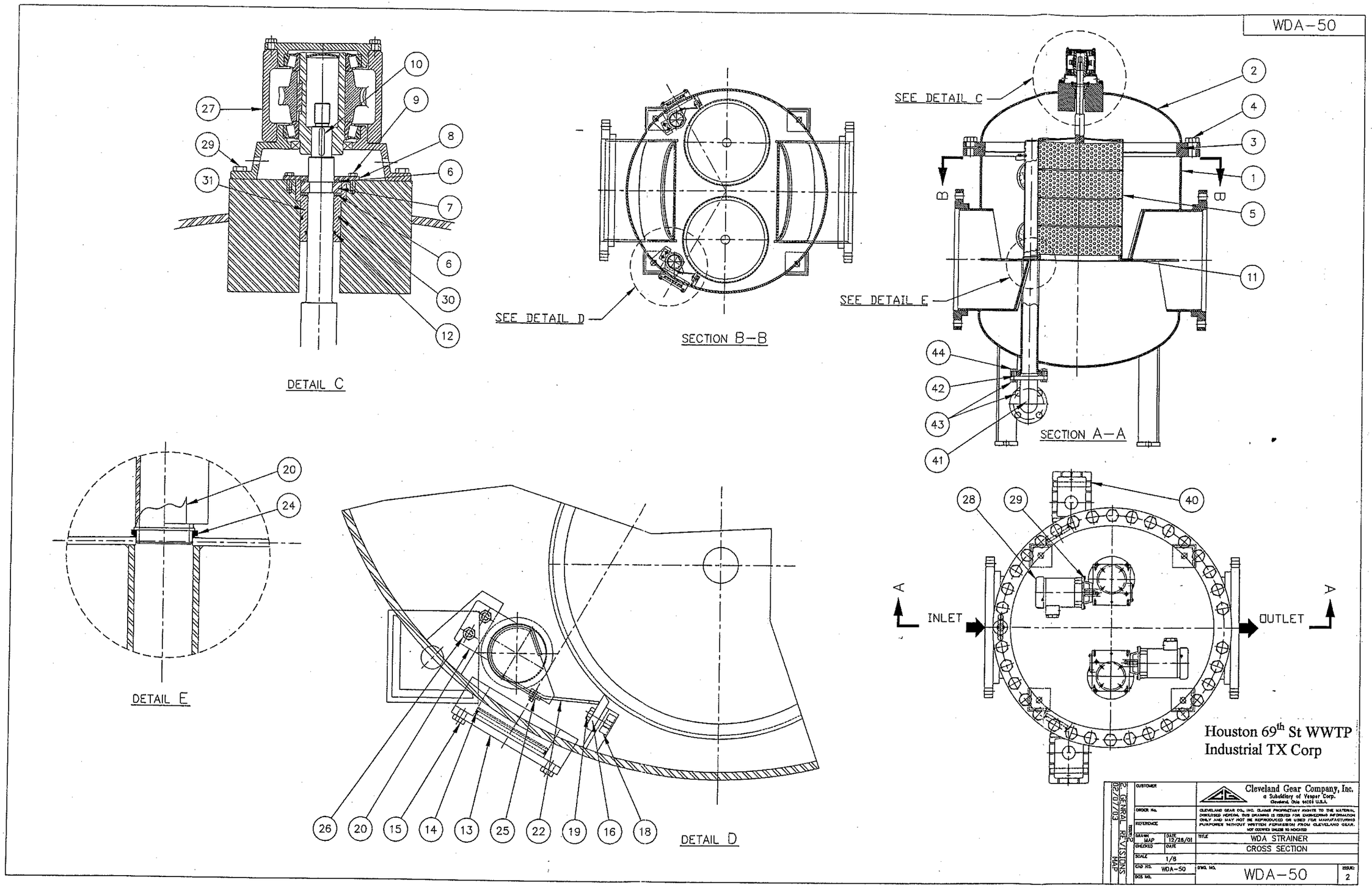
WDA-50
DETAIL C
SEE DETAIL D
SECTION B-B
SEE DETAIL C
SEE DETAIL E
SECTION A-A
DETAIL E
DETAIL D
INLET
OUTLET
Houston 69th St WWTP
Industrial TX Corp
Cleveland Gear Company, Inc.
a Subsidiary of Vesper Corp.
Cleveland, Ohio 44104 U.S.A.
CUSTOMER
ORDER No.
REFERENCE
DRAWN MAP
DATE 12/28/01
CHECKED
DATE
SCALE 1/8
CAD NO. WDA-50
DCS NO.
TITLE WDA STRAINER
CROSS SECTION
DWG. NO. WDA-50
ISSUE 2
2 GENERAL REVISIONS
02/07/03 MAP

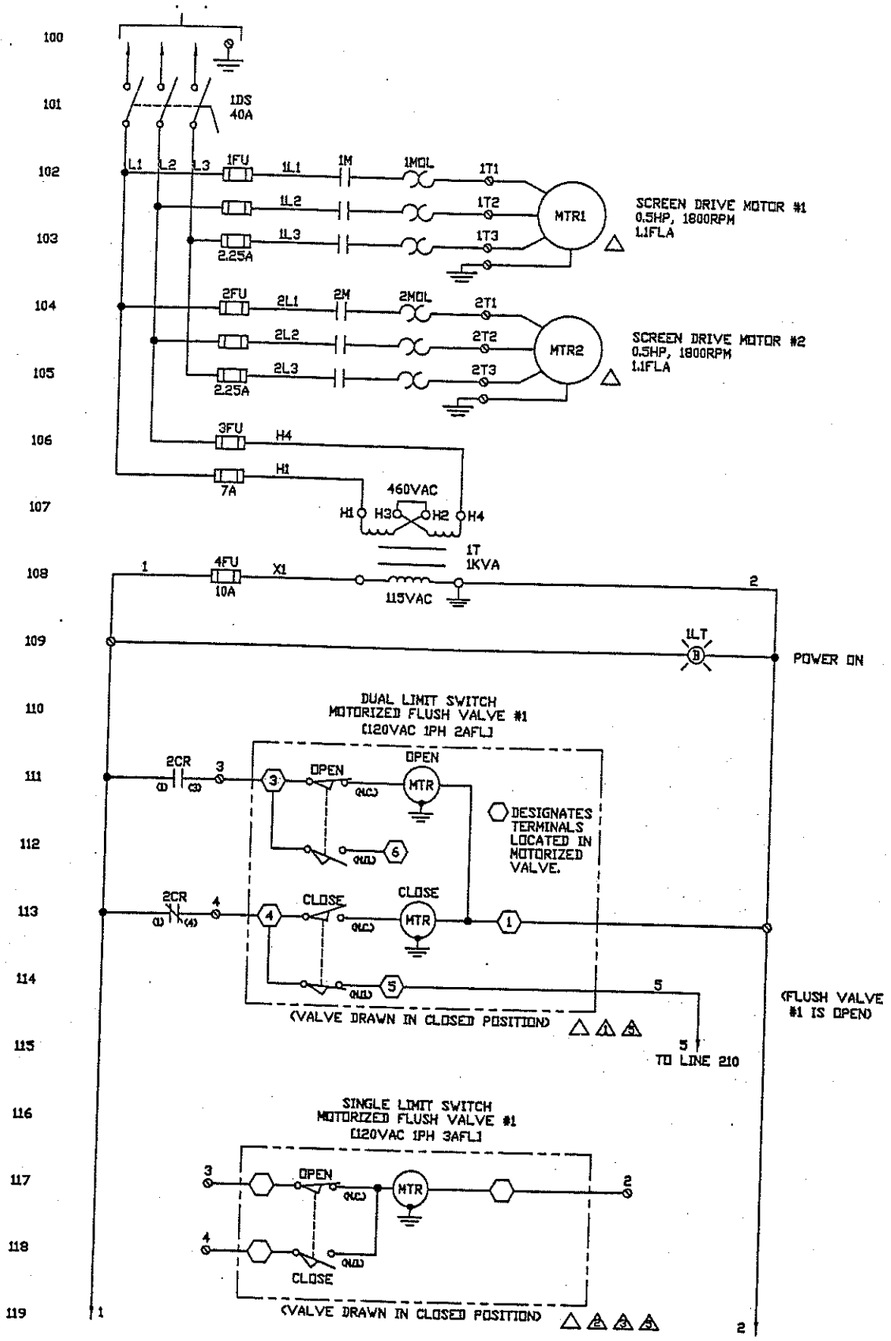


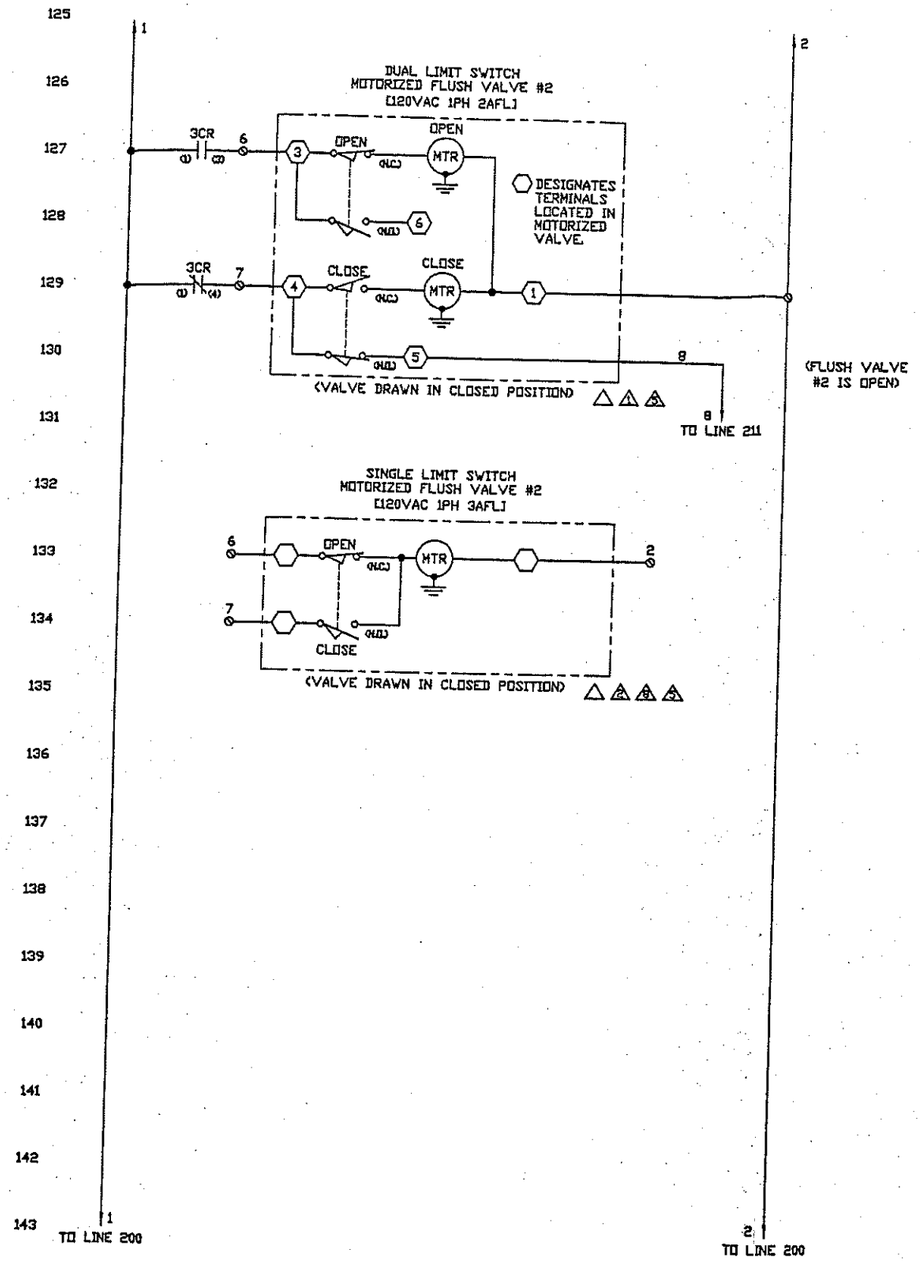


△ REMOTELY LOCATED COMPONENTS.

△1 WHEN USING DUAL LIMIT SWITCH FLUSH VALVES, MAKE CONNECTIONS AS INDICATED FOR THAT TYPE OF FLUSH VALVE.

△2 WHEN USING SINGLE LIMIT SWITCH FLUSH VALVES, MAKE CONNECTIONS AS INDICATED FOR THAT TYPE OF FLUSH VALVE.

△3 INSERT JUMPER FROM TERMINAL 1 TO TERMINAL 5 WHEN SINGLE LIMIT SWITCH FLUSH VALVE IS USED.

△4 TIME SETTINGS
T1-SCREEN FLUSH CYCLE TIME
T2-NEXT CYCLE DELAY
T3-AUTO CLEANING CYCLE
(TIME OUT INITIATES SCREEN FLUSH CYCLE)

△5 REFER TO MANUFACTURES FLUSH VALVE WIRING DIAGRAM TO DETERMINE WHAT TYPE OF FLUSH VALVE YOU HAVE.

△6 REMOTE CYCLE STOP
WHEN REMOTE START/STOP P/B'S ARE USED. REMOVE JUMPER AND CONNECT STOP BETWEEN TERMINALS 10 & 11. CONNECT START BETWEEN TERMINALS 1 & 12

△7 INSERT JUMPER FROM TERMINALS 1 TO 17 TO RUN STRAINERS SEQUENTIALLY. REMOVE JUMPER TO RUN STRAINERS SIMULTAINIOUSLY.

△8 INSERT JUMPER FROM TERMINAL 1 TO TERMINAL 8 WHEN SINGLE LIMIT SWITCH FLUSH VALVE IS USED.

Houston 69th St WWTP
Industrial TX Corp

DIFFERENTIAL PRESSURE SWITCH (DPS)

SET POINT #1
CYCLE START (LOW PRESSURE)

SET POINT #2
PILOT LIGHT ALARM (PRESSURE HIGH)

☐ CLEVELAND GEAR
☐ FARVAL
☐ COLUMBIA GEAR

CLEVELAND GEAR COMPANY
Cleveland, Ohio 44104 U.S.A.

CLEVELAND GEAR CLAIMS PROPRIETARY RIGHTS TO THE NATURAL, DISCLOSED HEREON. THIS DRAWING IS ISSUED FOR ENGINEERING INFORMATION ONLY AND MAY NOT BE REPRODUCED OR USED FOR MANUFACTURING PURPOSES WITHOUT WRITTEN PERMISSION FROM CLEVELAND GEAR. NOT DISCLOSED WHOLE OR IN PART.

| | |
|---|---|
| DRAWN | DATE 1/8/03 |
| CHECKED MSD | DATE |
| SCALE | |
| CAD NO. | |
| SCH NO. | |

TITLE STRAINER CONTROL PANEL
STANDARD CONTROL CIRCUIT

DWG NO. SH 1 OF 3 WDP-E2D ISSUE 1

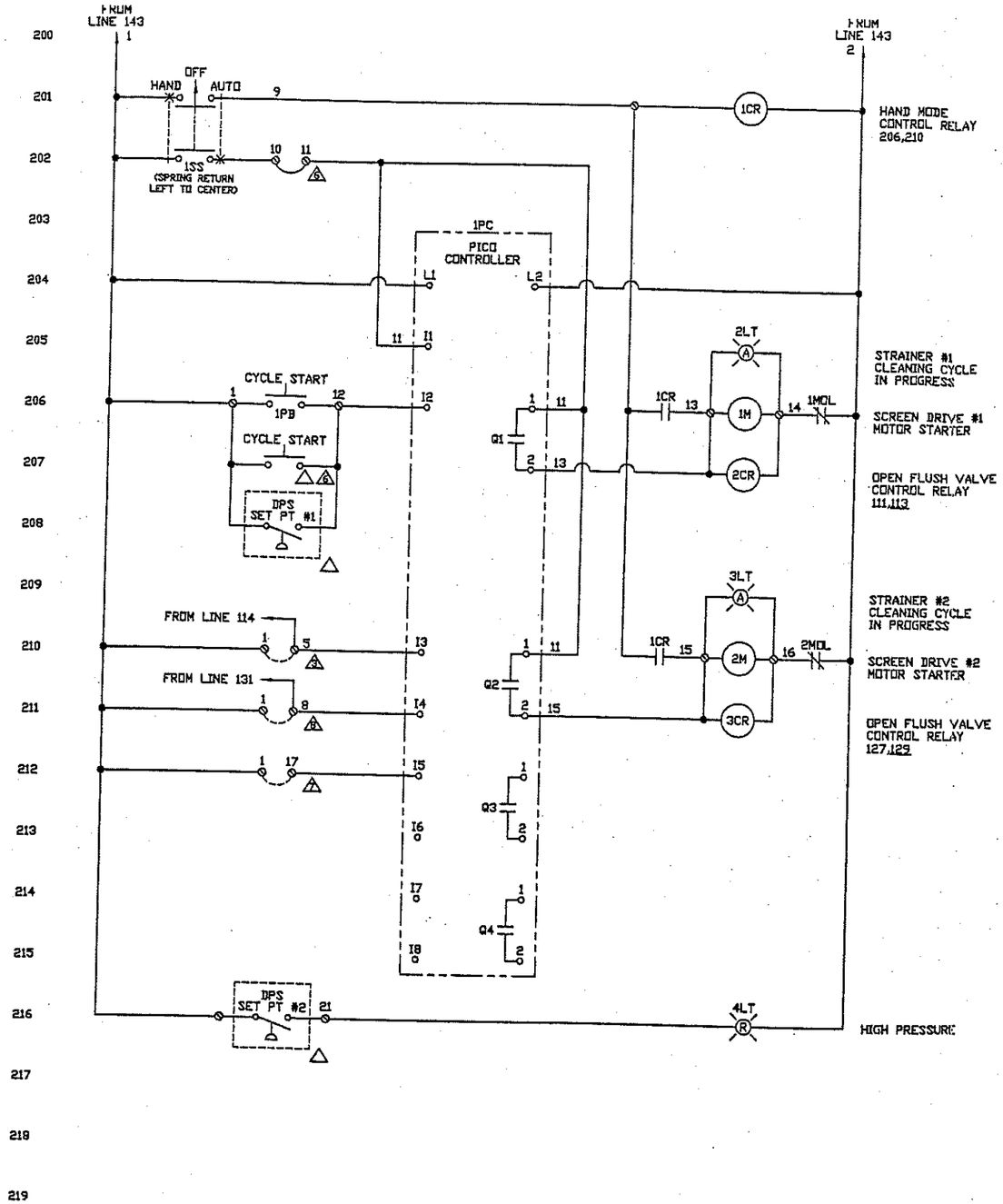


△ REMOTELY LOCATED COMPONENTS.

△1 WHEN USING DUAL LIMIT SWITCH FLUSH VALVES, MAKE CONNECTIONS AS INDICATED FOR THAT TYPE OF FLUSH VALVE.

△2 WHEN USING SINGLE LIMIT SWITCH FLUSH VALVES, MAKE CONNECTIONS AS INDICATED FOR THAT TYPE OF FLUSH VALVE.

△3 INSERT JUMPER FROM TERMINAL 1 TO TERMINAL 5 WHEN SINGLE LIMIT SWITCH FLUSH VALVE IS USED.

△4 TIME SETTINGS
T1-SCREEN FLUSH CYCLE TIME
T2-NEXT CYCLE DELAY
T3-AUTO CLEANING CYCLE
(TIME OUT INITIATES SCREEN FLUSH CYCLE)

△5 REFER TO MANUFACTURES FLUSH VALVE WIRING DIAGRAM TO DETERMINE WHAT TYPE OF FLUSH VALVE YOU HAVE.

△6 REMOTE CYCLE STOP
WHEN REMOTE START/STOP P/B'S ARE USED, REMOVE JUMPER AND CONNECT STOP BETWEEN TERMINALS 10 & 11. CONNECT START BETWEEN TERMINALS 1 & 12

△7 INSERT JUMPER FROM TERMINALS 1 TO 17 TO RUN STRAINERS SEQUENTIALLY. REMOVE JUMPER TO RUN STRAINERS SIMULTAINIOUSLY.

△8 INSERT JUMPER FROM TERMINAL 1 TO TERMINAL 8 WHEN SINGLE LIMIT SWITCH FLUSH VALVE IS USED.

DIFFERENTIAL PRESSURE SWITCH (DPS)

SET POINT #1
CYCLE START (LOW PRESSURE)

SET POINT #2
PILOT LIGHT ALARM (PRESSURE HIGH)

Houston 69th St WWTP
Industrial TX Corp

☐ CLEVELAND GEAR
☐ FARVAL
☐ COLUMBIA GEAR

CLEVELAND GEAR COMPANY
Cleveland, Ohio 44104 U.S.A.

CLEVELAND GEAR COMPANY RETAINS PROPRIETARY RIGHTS TO THE MATERIAL INCLUDED HEREON. THIS DRAWING IS ISSUED FOR ENGINEERING INFORMATION ONLY AND MAY NOT BE REPRODUCED OR USED FOR MANUFACTURING PURPOSES WITHOUT WRITTEN PERMISSION FROM CLEVELAND GEAR. NOT SUPPLIED UNLESS IN ORDER

DRAWN R. Evans DATE 1/15/93
CHECKED MCO DATE
SCALE
CAD NO.
BOM NO.

TITLE STRAINER CONTROL PANEL
STANDARD CONTROL CIRCUIT

DWG NO. SH 2 OF 3 WDP-E2D REV 1

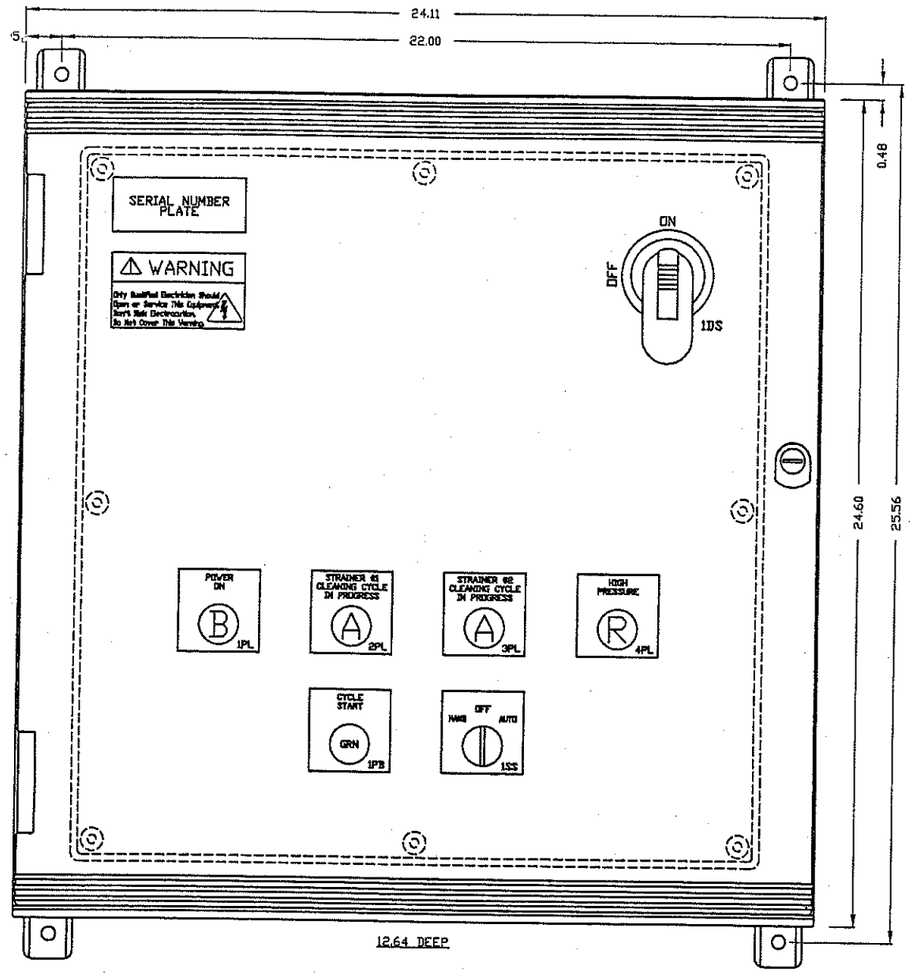


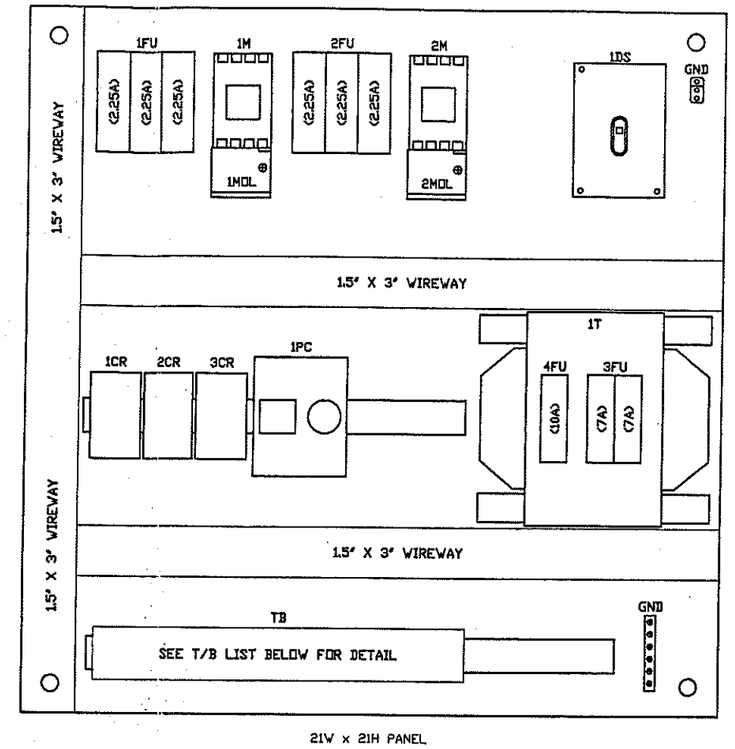


| NAME | QTY. | DESCRIPTION | PART No. | MFG. |
|---|---|---|---|---|
| 1PC | 1 | PICO CONTROLLER | 1760-L12AWA-NC | A-B |
| 1M,2M, | 2 | AC CONTACTOR (9A) | 100-M05ND3 | A-B |
| 1MOL,2MOL | 2 | OVERLOAD RELAY | 193-EA1DB | A-B |
| 1CR,2CR,3CR | 3 | RELAY | 700HA32A1 | A-B |
| 1CR,2CR,3CR | 3 | RELAY SOCKET | 700-HN100 | A-B |
| 1SS | 1 | SELECTOR SWITCH (3 POS) | 800H-JR4A | A-B |
| 1PB | 1 | PUSHBUTTON (GRN) | 800H-AR1D1 | A-B |
| 1PL | 1 | PILOT LIGHT (BLU) | 800H-PR16B | A-B |
| 2PL,3PL | 2 | PILOT LIGHT (AMB) | 800H-PR16A | A-B |
| 4PL | 1 | PILOT LIGHT (RED) | 800H-PR16R | A-B |
| TB | 35 | TERMINAL | 1492-HM3 | A-B |
| TB | 1 | END BARRIER | 1492-NM36 | A-B |
| TB | 2 | END ANCHOR | 1492-EA35 | A-B |
| TB | 2 | T/B STAND-OFFS | 1492-N25 | A-B |
| 1DS | 1 | DISCONNECT | OT30E3 | ABB |
| 1DS | 1 | DISCONNECT HANDLE | OHB45J5 | ABB |
| 1DS | 1 | DISCONNECT SHAFT | OXP5X265 | ABB |
| 3FU | 2 | FUSE (7A) | FNQ-R-7 | BUSSMANN |
| 4FU | 1 | FUSE (10A) | MDL-10 | BUSSMANN |
| 1FU,2FU | 6 | FUSE (2.25A) | LP-CC-2-1/4 | BUSSMANN |
| 1T | 1 | TRANSFORMER (1KVA) | E1000WA | HEVI-DUTY |
| 3FU | 1 | PRIMARY FUSE HOLDER | FB2 | HEVI DUTY |
| 4FU | 1 | SECONDARY FUSE HOLDER | FBP | HEVI DUTY |
| | 1 | FIBERGLASS ENCLOSURE | U-U606030 | HOFFMAN |
| | 1 | PANEL | A-24P24 | HOFFMAN |
| 1FU,2FU | 2 | FUSE BLOCK (3-POLE) | 6CC30A3SPQ | MARATHON |
| GND | 1 | GROUND LUG | TL8 | NSI |
| GND | 1 | GROUND BUS | GB5 | SIEMENS |

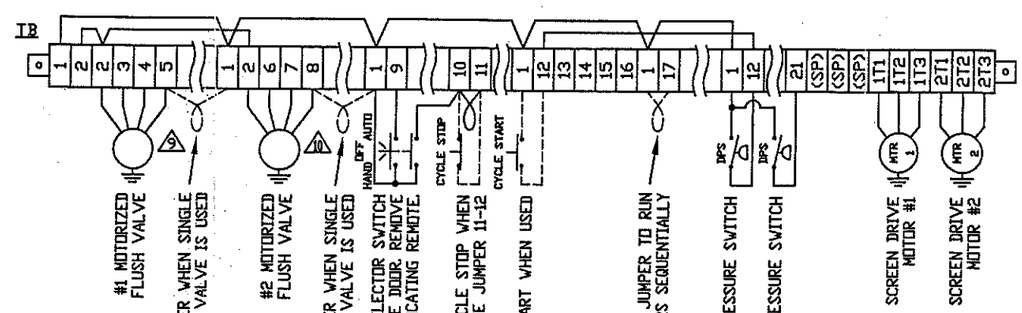


9 WIRE NUMBER 5 IS NOT CONNECTED WHEN USING THE SINGLE LIMIT SWITCH VALVE.

10 WIRE NUMBER 8 IS NOT CONNECTED WHEN USING THE SINGLE LIMIT SWITCH VALVE.

Houston 69th St WWTP
Industrial TX Corp

CLEVELAND GEAR
FARVAL
COLUMBIA GEAR

CLEVELAND GEAR COMPANY
Cleveland, Ohio 44104 U.S.A.

CLEVELAND GEAR CLAIMS PROPRIETARY RIGHTS IN THE MATERIAL EMBODIED HEREON. THIS DRAWING IS ISSUED FOR EMERGENCY INFORMATION ONLY AND MAY NOT BE REPRODUCED OR USED FOR MANUFACTURING PURPOSES WITHOUT WRITTEN PERMISSION FROM CLEVELAND GEAR. NO OBVERSE UNLESS SO DESIGNED

DRAWN R.Jones DATE 1/8/03
DESIGN D. MAND DATE
SCALE
CAD NO.
DCS NO.

TITLE STRAINER CONTROL PANEL
STANDARD CONTROL CIRCUIT

DWG NO. WDP-E2D
SH 3 OF 3
ISSUE 1