"EXHIBIT D"

EAST JORDAN IRON WORKS DRAWINGS

1846C COVER

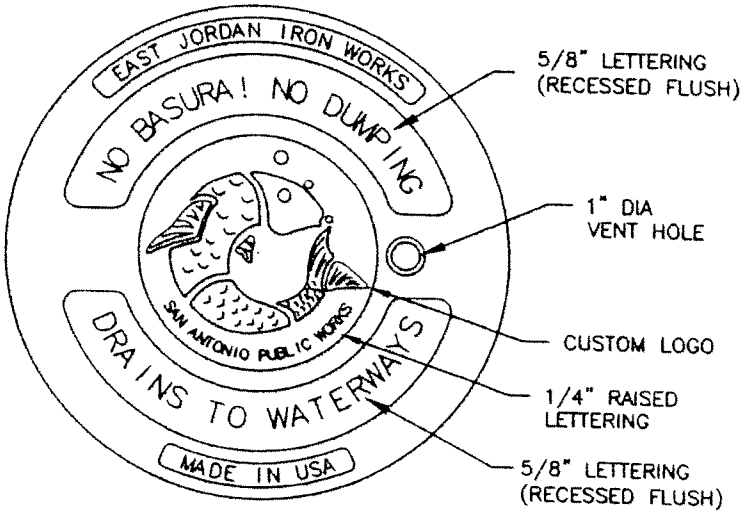

PLAN VIEW

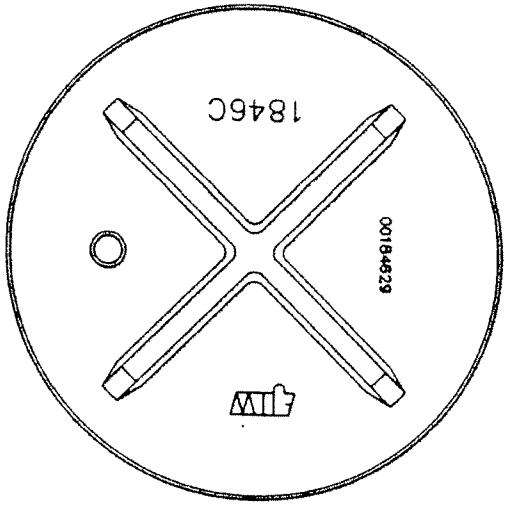

BOTTOM VIEW

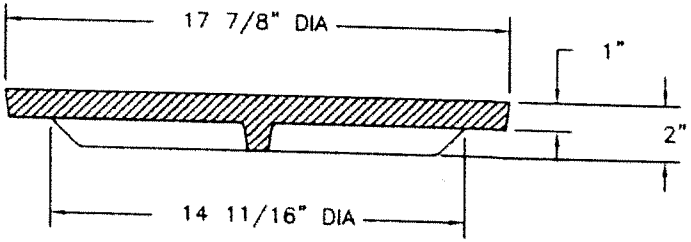

SECTION VIEW

PRODUCT NUMBER

00184629

DESIGN FEATURES

MATERIALS
COVER-GRAY IRON
ASTM A48 CL35B

DESIGN LOAD
HEAVY DUTY

COATING
DIPPED

OPEN AREA
N/A

√ DESIGNATES MACHINE SURFACE

Corporate
Headquarters
301 Spring Street
PO Box 439
East Jordan, MI
49727-0439
800.874.4100

EJ GROUP

Call Today for More Information
800.626.4653 EJIW EAST JORDAN IRON WORKS
WE COVER YOUR INFRASTRUCTURE
www.ejiw.com
MADE IN THE USA

- Weights [lbs./kg.] dimensions [inches/mm.], and drawings provided for your guidance.
- We reserve the right to modify specifications without prior notice.
- Uncontrolled distribution.

CONFIDENTIAL: This drawing is the property of East Jordan Iron Works, Inc., and embodies confidential information, registered marks, trade secret information, and/or know how that is the property of East Jordan Iron Works, Inc. ©Copyright 2009 East Jordan Iron Works, Inc.

DRAWING DETAILS

ORIGINAL DRAWING:	SMH	02/13/06
REVISED BY:	DEW	07/13/10

V4243-4 DI GRATE W/ PENT HEAD CAM

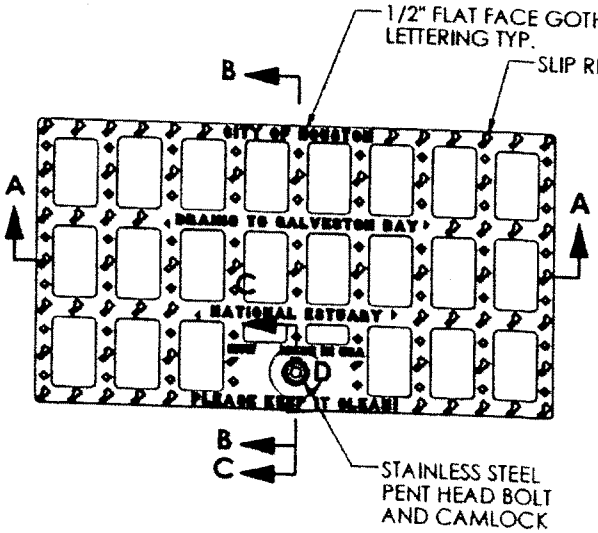

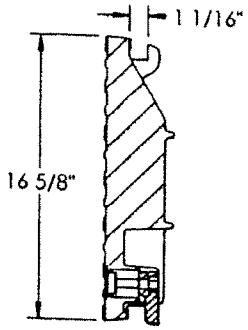

SECTION B-B

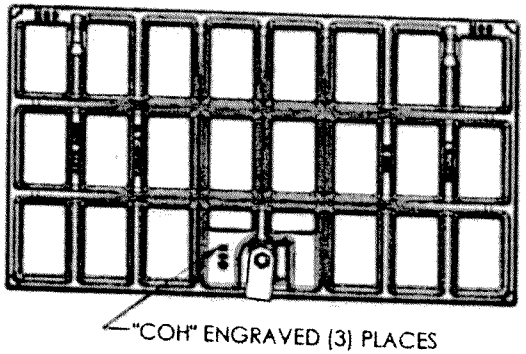

DETAIL D

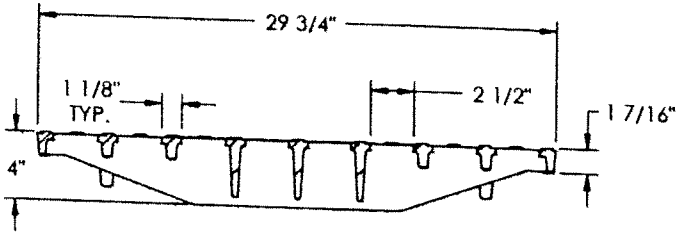

SECTION A-A

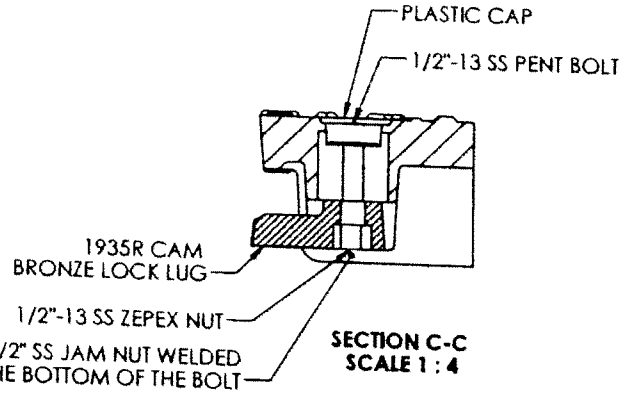

SECTION C-C
SCALE 1 : 4

PRODUCT NUMBER

44243431A01

DESIGN FEATURES

MATERIALS
GRATE-DUCTILE IRON
ASTM A536

DESIGN LOAD
HEAVY DUTY

COATING
UNDIPPED

OPEN AREA
230 SQ. IN.

✓ **DESIGNATES MACHINE SURFACE**

INCLUED FEATURES

SLIP RESISTANT SURFACE
with the LLLL® registered trademark

REFERENCE INFORMATION

44243431 GRATE
LH00101320 CAM

DRAWING DETAILS

ORIGINAL DRAWING:	JD	8/4/2011
REVISED BY:	JD	9/8/2011

Corporate
Headquarters
301 Spring Street
PO Box 439
East Jordan, MI
49727-0439
800.874.4100

EJ GROUP

Call Today for More Information
800.626.4653
EJIW EAST JORDAN IRON WORKS EST. 1883
WE COVER YOUR INFRASTRUCTURE
www.ejiw.com
MADE IN THE USA

- Weights (lbs./kg.) dimensions (inches/mm., and drawings provided for your guidance.
- We reserve the right to modify specifications without prior notice.
- Uncontrolled distribution.

CONFIDENTIAL: This drawing is the property of East Jordan Iron Works, Inc., and embodies confidential information, registered marks, trade secret information, and/or know how that is the property of East Jordan Iron Works, Inc. ©Copyright 2009 East Jordan Iron Works, Inc.

1846Z1 RING

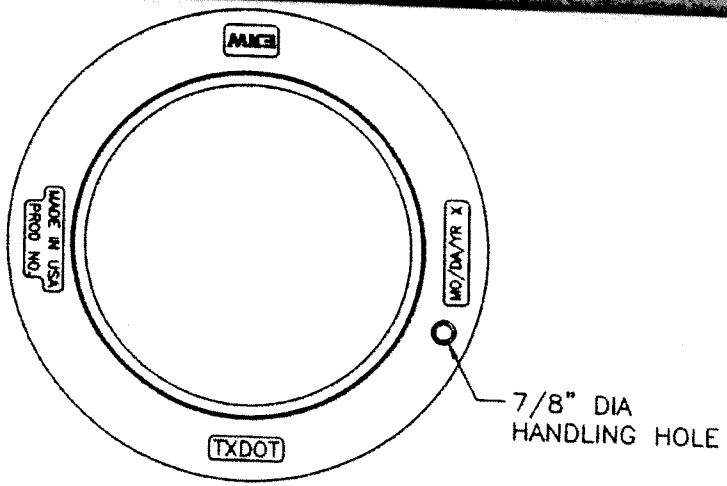

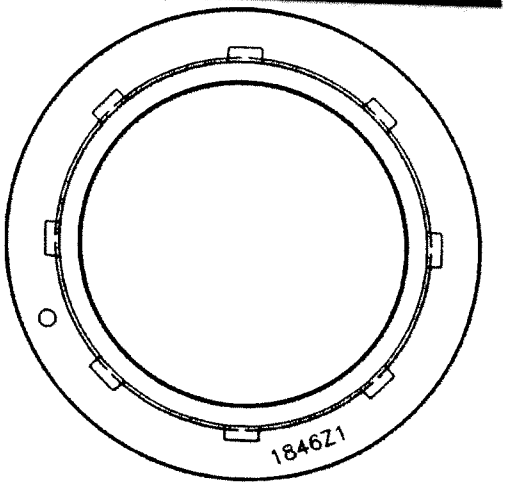

BOTTOM VIEW

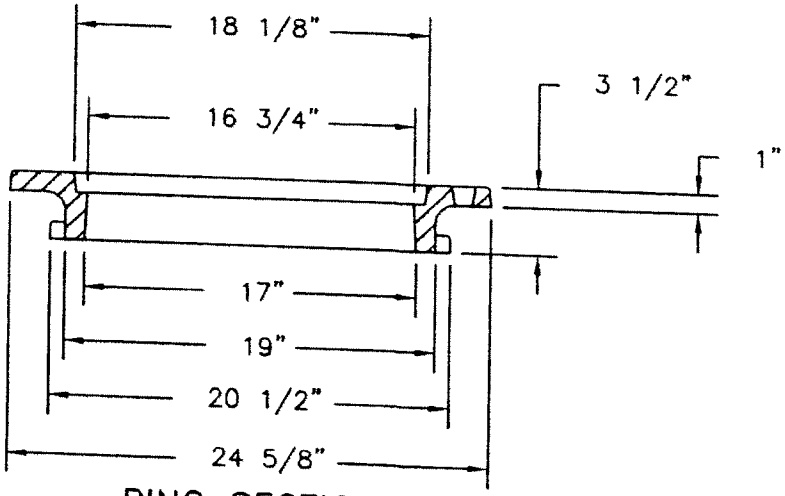

RING SECTION

PRODUCT NUMBER

00184611

DESIGN FEATURES

MATERIALS
RING-GRAY IRON
ASTM A48 CL35B

DESIGN LOAD
HEAVY DUTY

COATING
UNDIPPED

OPEN AREA
N/A

√ **DESIGNATES MACHINED SURFACE**

Corporate
Headquarters
301 Spring Street
PO Box 439
East Jordan, MI
49727-0439
800.874.4100

EJ GROUP

Call Today for More Information

800.626.4653 EJIW EAST JORDAN IRON WORKS EST 1883 WE COVER YOUR INFRASTRUCTURE www.ejiw.com MADE IN THE USA

- Weights (lbs./kg.) dimensions (inches/mm., and drawings provided for your guidance.
- We reserve the right to modify specifications without prior notice.
- Uncontrolled distribution.

CONFIDENTIAL: This drawing is the property of East Jordan Iron works, Inc., and embodies confidential information, registered marks, trade secret information, and/or know how that is the property of East Jordan Iron Works, Inc. ©Copyright 2009 East Jordan Iron Works, Inc.

DRAWING DETAILS

ORIGINAL DRAWING: TCL 03/27/03

REVISED BY: JJD 06/08/11

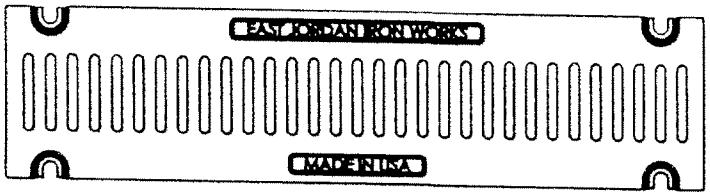

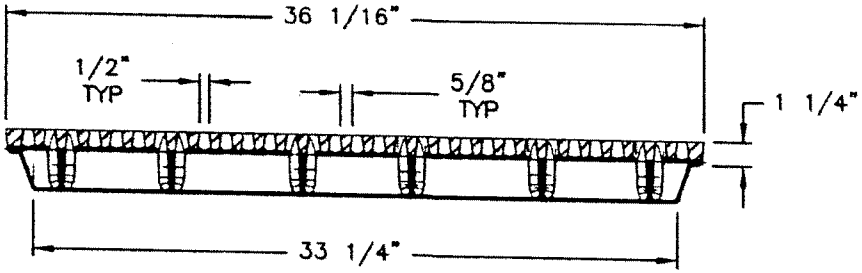

SECTION A-A

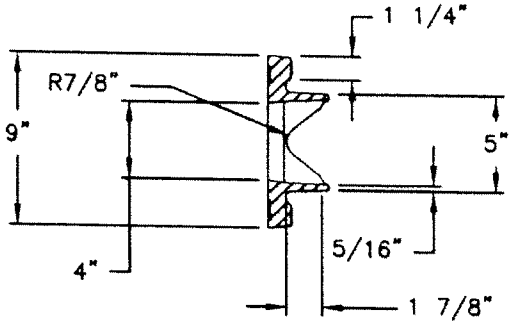

SECTION

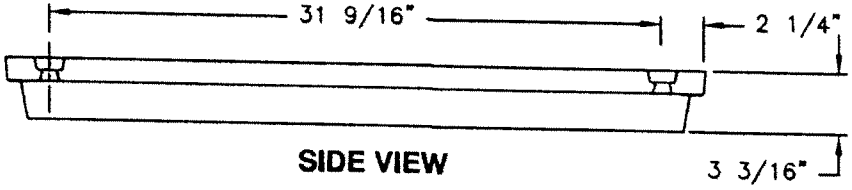

SIDE VIEW

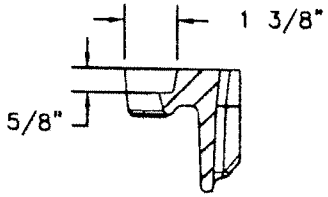

BOLT SLOT SECTION

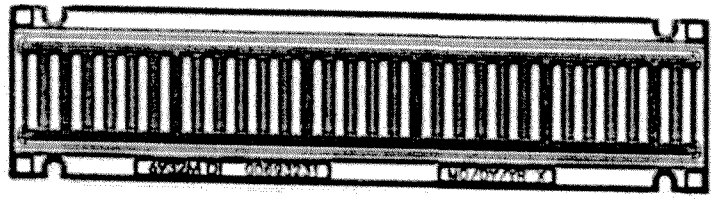

BOTTOM VIEW

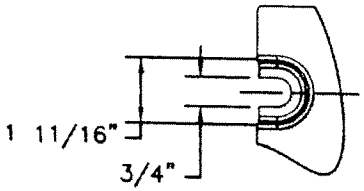

BOLT SLOT PLAN

EJIW EAST JORDAN IRON WORKS EST.1883
800-626-4653
www.ejiw.com
MADE IN USA

PRODUCT NUMBER
00693231

CATALOG NUMBER
6932M DI

TRENCH GRATE

LOAD RATING
HEAVY DUTY

COATING
UNDIPPED

SPECIFICATION
GRATE – DUCTILE IRON ASTM A536

OPEN AREA
60 SQ. IN.

√ DESIGNATES MACHINED SURFACE

DRAWN SMH/DEW	DATE 05/10/06
LAST REVISED DEW	DATE 07/29/08

REFERENCE INFORMATION

CONFIDENTIAL: This drawing is the property of East Jordan Iron Works, Inc. and embodies confidential information, trade secret information, and/or know how that is the property of East Jordan Iron Works, Inc. © Copyright 2008 East Jordan Iron Works, Inc.